Department of the Army
Pamphlet 385–64

Safety

Ammunition and Explosives Safety Standards

Headquarters
Department of the Army
Washington, DC
15 December 1999

UNCLASSIFIED

SUMMARY of CHANGE

DA PAM 385–64
Ammunition and Explosives Safety Standards

This change 1--

- Incorporates recent changes to explosives safety criteria of DOD 6055.9-STD, DOD Ammunition and Explosives Safety Standards.

- Incorporates requirements previously only contained in TM 206-1300-9 (rescinded) (para 2-6).

- Adds requirements for underground facilities (para3-23, para 5-13, figure 5-10, and para 6-3c).

- Adds requirements for plans to provide safety, security, and environmental protection in emergency response (para 3-24).

- Adopts DOD revisions to criteria for hazard division 1.2 (app I).

- Provides corrections to quantity-distance requirements for public highways (para 5-6).

- Provides corrections to unbarricaded intraline distance requirements (para 5-6d(3)).

- Provides corrections to facilities siting criteria (chap 5).

- Provides corrections to magazine siting criteria (chap 5).

- Corrects/updates quantity-distance tables (chap 5)

- Adds requirements for surge suppression for incoming conductors to include suppression at the entrance to the building from each wire to ground (para 6-5b).

- Corrects qualification requirements for personnel responsible for electrical maintenance, inspection and testing (para 6-13c(1)).

- Clarifies lighting protection electrical test requirements for earth covered magazines (table 6-1).

- Corrects DD Form 626 inspection requirements motor vehicles loaded with explosives, ammunition, or other hazardous material (para 7-7a and 7-8).

- Adds information on DOD explosives safety surveys (para 8-1f).

- Changes construction requirements for explosives buildings (para 8-5).

- Provides changes to requirements for barricaded open storage modules and barricades and earth cover for magazines (para 8-29c, 8-29d(3), and 8-30).

- Provides quantity-distance requirements for maritime prepositioning ships (para 11-6d(7)) and table 11-13).

- Provides changes to lightning protection requirements (chap 12)

- Adds requirements from the Munitions Rule (para 13-29 and chap 19).

- Changes safety requirements for contingency deployment ammunition operations in a less than wartime environment (chap 14).

- Changes safety requirements for wartime operations (chap 15).

- Changes earth covered magazine criteria (app G).

- Adds explosives safety program management requirements (app J).

- This new Department of the Army pamphlet--

- Implements and amplifies the explosives safety criteria depicted in DOD 6055.9-STD, DOD Ammunition and Explosives Safety Standards (chap 1).

- Defines general safety standards for Army operations involving ammunition and/or explosives (chap 2).

- Establishes management controls for fire prevention, suppression and protection as applicable to Army ammunition and explosives (chap 3).

- Provides an overview of the Joint Hazard Classification System (JHCS) and establishes storage principles for the various compatibility groupings of ammunition and explosives (chap 4).

- Establishes quantities of explosives material and distance separation requirements that provide defined levels of protection (chap 5).

- Establishes requirements for the installation and use of electrical service and equipment in Army explosives facilities (chap 6).

- Defines regulations and guidance regarding shipment of Army explosives and other dangerous articles (chap 7).

- Establishes requirements and provides definitive material on the preparation and submittal of explosives and toxic chemical site plans (chap 8).

- Explains the purpose, denotes minimum requirements and defines responsibilities of the Army explosives licensing program (chap 9).

- Provides guidance on the appropriate usage of material handling equipment (MHE) for ammunition and/or explosives operations (chap 10).

- Establishes requirements for the movement of Army units to ports during times of war, peace, or national emergency (chap 11).

- Provides the minimum technical criteria for lightning protection of explosives areas and facilities (chap 12).

- Sets forth requirements for storage of ammunition and explosives within the Army (chap 13).

- Establishes peacetime operational requirements concerning CONUS and OCONUS ammunition and explosives activities, training operations, contingency force operations and airfields used by military aircraft in the theater of operations (chap 14).

- Provides guidance for the safe handling, transportation, and storage of ammunition during wartime and contingency operations (chap 15).

- Defines the Army criteria pertaining to the storage and handling of commercial explosives (chap 16).

- Provides guidance on the requirements and procedures for the disposal of ammunition, explosives and propellants (chap 17).

- Establishes requirements and criteria relative to operations involving maintenance and/or the restoration of ammunition and explosives to a serviceable condition (chap 18).

Headquarters
Department of the Army
Washington, DC
15 December 1999

Department of the Army Pamphlet 385–64

Safety

Ammunition and Explosives Safety Standards

By Order of the Secretary of the Army:

ERIC K. SHINSEKI
General, United States Army
Chief of Staff

Official:

JOEL B. HUDSON
Administrative Assistant to the Secretary of the Army

History. This publication was originally printed on 28 November 1997. It was authenticated by Dennis J. Reimer, General, United States Army, Chief of Staff and Joel B. Hudson, Administrative Assistant to the Secretary of the Army. This electronic edition publishes the basic 1997 edition and incorporates change 1. Change 1 was printed on 15 December 1999 and was authenticated by Eric K. Shinseki, General, United States Army, Chief of Staff and Joel B. Hudson, Administrative Assistant to the Secretary of the Army. Changes are shown with underscore and tint.

Summary. This pamphlet provides force protection guidance for commanders with an ammunition or explosives mission. It provides procedures to protect military and civilian Army employees, the public, and the environment. It also sets forth procedures for use when transporting ammunition or explosives over the public highway.

Applicability. The provisions of this pamphlet apply to all Army installations and activities, the Army National Guard (ARNG), the U.S. Army Reserve (USAR), Government-owned, contractor-operated (GOCO) facilities, and contractor operations on Government property. Ammunition and explosives under U.S. title, even though stored in a host country, remain the responsibility of the U.S. commander. Storage must conform with Army standards for explosives safety unless the use of other criteria (such as North Atlantic Treaty Organization (NATO) or host nation has been agreed to or is mandatory. A copy of all agreement documents will be provided major Army commands (MACOMs) involved and two will be sent to the Director, U.S. Army Technical Center for Explosives Safety (USATCES). A copy of all agreements will also be made a permanent part of the real property records. Provisions of this pamphlet apply in wartime, peacetime, and in contingency situations.

Proponent and exception authority. The proponent of this pamphlet is the Under Secretary of the Army. The Under Secretary of the Army has the authority to approve exceptions to this pamphlet that are consistent with controlling law and regulation. The Under Secretary of the Army may delegate this authority, in writing, to a division chief within the proponent agency who holds the grade of colonel or the civilian equivalent.

Suggested Improvements. Users are invited to send comments and suggested improvements on DA Form 2028 (Recommended Changes to Publications and Blank Forms) directly to Director, U.S. Army Technical Center for Explosives Safety.

Distribution. Distribution of this publication is made in accorance with initial distribution number (IDN) 095466, for command levels D and E for the Active Army, the Army National Guard, and the U.S. Army Reserve.

Contents (Listed by paragraph and page number)

Chapter 1
Introduction, *page 1*
Purpose • 1–1, *page 1*
References • 1–2, *page 1*
Explanation of abbreviations and terms • 1–3, *page 1*
Implementation • 1–4, *page 1*
Policy on existing explosives facilities • 1–5, *page 1*

Chapter 2
General Safety Precautions, *page 1*
Hazard analysis and risk assessment • 2–1, *page 1*
Personnel qualifications • 2–2, *page 2*
Use of written standards • 2–3, *page 2*

UNCLASSIFIED

Contents—Continued

Personnel and explosives limits • 2–4, *page 2*
Handling and movement precautions • 2–5, *page 2*
Housekeeping • 2–6, *page 3*
Testing, disassembly, and modification of explosives items • 2–7, *page 4*
Explosive ordnance disposal training aids • 2–8, *page 4*
Field safety • 2–9, *page 5*
Accident reporting • 2–10, *page 5*
Rod and gun clubs • 2–11, *page 5*
Public demonstrations, exhibitions, and celebrations • 2–12, *page 5*
Static or public display • 2–13, *page 6*
Explosives training aids for military working dogs • 2–14, *page 6*
Hunting • 2–15, *page 6*

Chapter 3
Fire Prevention, Protection, and Suppression, *page 9*
Fire prevention management • 3–1, *page 9*
Smoking • 3–2, *page 9*
Training • 3–3, *page 10*
Fire drills • 3–4, *page 10*
Fire exit drills • 3–5, *page 10*
Alarms • 3–6, *page 10*
Fire prevention requirements • 3–7, *page 10*
Auxiliary firefighting equipment • 3–8, *page 12*
Storage of water for firefighting • 3–9, *page 13*
Access to fire hose • 3–10, *page 13*
Limitation of fire areas • 3–11, *page 13*
Reciprocal agreements for fire fighting support • 3–12, *page 13*
Public withdrawal distances • 3–13, *page 13*
Firefighting guidance symbols • 3–14, *page 14*
Posting fire symbols • 3–15, *page 14*
Exceptions on posting fire symbols • 3–16, *page 14*
Posting chemical hazard symbols • 3–17, *page 15*
Procedures for chemical agents and other toxic substances • 3–18, *page 15*
Firefighting at railheads • 3–19, *page 15*
Automatic sprinkler systems • 3–20, *page 15*
Deluge systems for explosives operations • 3–21, *page 15*
Instructions for fighting fires involving ammunition or explosives • 3–22, *page 17*
Reentry of underground facilities • 3–23, *page 18*
Emergency planning • 3–24, *page 18*

Chapter 4
Hazard Classification and Compatibility Groups, *page 29*
Explosives hazard classification procedures • 4–1, *page 29*
EIDS and EIDS ammunition • 4–2, *page 29*
Storage principles • 4–3, *page 30*
Mixed storage • 4–4, *page 30*
Storage compatibility groups • 4–5, *page 30*
Class 1 or 6 chemical agent hazards or combined chemical agent and explosives hazards • 4–6, *page 31*
Underground storage • 4–7, *page 31*

Chapter 5
Quantity-Distance, *page 33*
Explosives quantity-distance • 5–1, *page 33*
Quantity of explosives • 5–2, *page 33*
Measuring distance • 5–3, *page 34*

Contents—Continued

Q-D computations and determinations • 5–4, *page 34*
Fragments • 5–5, *page 35*
Quantity-distance: expected effects and permissible exposures • 5–6, *page 36*
Facilities siting criteria • 5–7, *page 40*
Magazine siting requirements • 5–8, *page 53*
Quantity-distance tables • 5–9, *page 54*
Airfields, heliports, and seadromes • 5–10, *page 55*
Pier and wharf facilities • 5–11, *page 56*
Liquid propellants • 5–12, *page 56*
Underground storage • 5–13, *page 58*

Chapter 6
Electrical Hazards, *page 99*

Section I
Electrical Service and Equipment, page 99
Overview • 6–1, *page 99*
Hazardous locations • 6–2, *page 99*
Approved equipment • 6–3, *page 100*
Maintenance of electrical equipment • 6–4, *page 101*
Electrical service lines in explosives areas • 6–5, *page 101*
Electrical motors for hazardous locations • 6–6, *page 101*
Portable lighting systems • 6–7, *page 101*
Permanent lighting for storage magazines • 6–8, *page 101*
Flexible cords • 6–9, *page 101*

Section II
Static electricity, page 102
Static electricity charge dissipation subsystem • 6–10, *page 102*
Ordnance grounds (static grounds) • 6–11, *page 106*
Instrument grounds • 6–12, *page 106*

Section III
Grounding, page 106
Explosives facility grounding • 6–13, *page 106*
Earth electrode subsystem • 6–14, *page 106*

Section IV
Electromagnetic Radiation, page 108
Hazards of electromagnetic radiation to electro-explosive devices (EEDs) • 6–15, *page 108*

Chapter 7
Transportation, *page 119*

Section I
General requirements, page 119
General information • 7–1, *page 119*
Certification of personnel involved with transportation • 7–2, *page 119*
Hazard classification • 7–3, *page 119*
Preparation for shipment • 7–4, *page 120*
Compatibility of explosives in transportation • 7–5, *page 120*

Section II
Motor Vehicles, page 120
Vehicle general safety requirements • 7–6, *page 120*
Inbound motor shipment of ammunition and explosives • 7–7, *page 121*

Contents—Continued

Outbound motor vehicle shipments of explosives • 7–8, *page 121*
Safe haven for explosive shipments • 7–9, *page 122*
On-post explosive movements • 7–10, *page 122*
Passengers in or on Government vehicles transporting explosives • 7–11, *page 122*

Section III
Rail, Air, and Water Transport, page 122
Railroad transportation • 7–12, *page 123*
Air transportation • 7–13, *page 124*
Water transportation • 7–14, *page 125*

Chapter 8
Safety Site Planning, Construction, and Utilities, *page 125*

Section I
Explosives/Toxic Chemical Safety Site Plans, page 125
Explosives/Toxic Chemical Safety Site Plan Submittals • 8–1, *page 125*
Explosives safety site plan contents • 8–2, *page 126*
Review and approval of explosives safety site plans • 8–3, *page 127*

Section II
Construction Considerations, page 127
Construction considerations • 8–4, *page 127*
Buildings • 8–5, *page 128*
Interior finishes and floors • 8–6, *page 128*
Firewalls • 8–7, *page 129*
Substantial dividing walls • 8–8, *page 129*
Building exits • 8–9, *page 129*
Safety chutes • 8–10, *page 129*
Emergency exits and fire escapes • 8–11, *page 129*
Stairways • 8–12, *page 129*
Fixed ladders • 8–13, *page 129*
Platforms, runways, and railings • 8–14, *page 129*
Passageways • 8–15, *page 129*
Roads, walks, and gates • 8–16, *page 129*
Windows and skylights • 8–17, *page 130*
Drains and sumps • 8–18, *page 130*
Hardware • 8–19, *page 130*
Tunnels • 8–20, *page 130*
Powerhouse equipment • 8–21, *page 130*
Refrigeration • 8–22, *page 130*
Laundries • 8–23, *page 130*
Steam for processing and heating • 8–24, *page 130*
Ventilation • 8–25, *page 131*
Electrical equipment • 8–26, *page 131*
Collection of explosives dusts • 8–27, *page 131*
Automatic sprinkler systems • 8–28, *page 132*

Section III
Open Storage Modules, Barricades, and Protective Construction, page 132
Barricaded open storage modules • 8–29, *page 132*
Barricades and earth cover for magazines • 8–30, *page 133*
Policy on protective construction • 8–31, *page 134*
Strengthening (hardening of buildings) • 8–32, *page 135*

Contents—Continued

Chapter 9
Explosives Licensing, *page 140*
Procedures • 9–1, *page 140*
Required information • 9–2, *page 140*

Chapter 10
Materials Handling Equipment (MHE), *page 140*
General requirements • 10–1, *page 140*
Battery-powered materials handling equipment • 10–2, *page 140*
Gasoline and diesel powered equipment • 10–3, *page 141*
LP-gas-powered equipment • 10–4, *page 141*
Gasoline, diesel-powered and LP-gas-powered equipment for handling explosives materials • 10–5, *page 141*
Storage • 10–6, *page 142*

Chapter 11
Port Operations, *page 142*
Background information • 11–1, *page 142*
Loading of vehicles • 11–2, *page 142*
Vehicle holding site • 11–3, *page 143*
Railhead operations • 11–4, *page 143*
Road movement • 11–5, *page 143*
Port safety • 11–6, *page 143*

Chapter 12
Lightning Protection, *page 148*
General information • 12–1, *page 148*
Fundamental principles of lightning protection • 12–2, *page 149*
Locations requiring an LPS • 12–3, *page 149*
Locations not requiring lightning protection • 12–4, *page 149*
Requirements for lightning protection systems • 12–5, *page 150*
Types of lightning protection systems • 12–6, *page 151*
General prohibitions • 12–7, *page 151*
Bonding • 12–8, *page 152*
Lightning warning systems • 12–9, *page 152*
Structural grounds • 12–10, *page 152*
Grounding • 12–11, *page 152*
Surge protection • 12–12, *page 152*
Visual inspection requirements • 12–13, *page 153*
Electrical testing requirements • 12–14, *page 153*
Records • 12–15, *page 153*
Truck holding areas • 12–16, *page 153*
Lightning protection for empty facilities • 12–17, *page 153*

Chapter 13
Explosives Storage Requirements, *page 155*
General requirements • 13–1, *page 155*
Magazine storage of explosives and ammunition • 13–2, *page 156*
Outdoor storage • 13–3, *page 159*
Holding yard • 13–4, *page 159*
Storage of specific types of ammunition and explosives • 13–5, *page 159*
Inert ammunition • 13–6, *page 161*
Unserviceable ammunition • 13–7, *page 162*
Storage of captured enemy ammunition • 13–8, *page 162*
Chemical munitions • 13–9, *page 162*
Chemical Group B agents • 13–10, *page 163*

Contents—Continued

Storage of Chemical Group B agent munitions • 13–11, *page 163*
Special protective equipment for Chemical Group B agent munitions • 13–12, *page 163*
First aid for Group B chemical agents • 13–13, *page 164*
Leaking Chemical Group B agent munitions • 13–14, *page 164*
Removal of spilled Chemical Group B fillers • 13–15, *page 164*
Fire in Chemical Group B agent munitions magazines • 13–16, *page 164*
Chemical Group C agents • 13–17, *page 164*
Storage for Chemical Group C munitions • 13–18, *page 164*
First aid and special equipment for Chemical Group C munitions • 13–19, *page 164*
Leaking Group C chemical munitions • 13–20, *page 165*
Removal of Chemical Group C contamination • 13–21, *page 165*
Fire in Chemical Group C munitions magazines • 13–22, *page 165*
Chemical Group D fillers • 13–23, *page 166*
Storage of Chemical Group D munitions • 13–24, *page 166*
Special protective equipment for Chemical Group D munitions • 13–25, *page 166*
First aid for Chemical Group D munitions • 13–26, *page 166*
Leaking Chemical Group D munitions • 13–27, *page 166*
Fire in Chemical Group D munitions magazines • 13–28, *page 166*
Termination of use of facilities storing ammunition and explosives • 13–29, *page 166*

Chapter 14
General • 14–1, *page 167*
Site plan process • 14–2, *page 167*
Asset Preservation Distances. • 14–3, *page 168*
Basic load ammunition holding areas • 14–4, *page 168*
Basic load storage in other than BLAHAs • 14–5, *page 170*
Vehicle and equipment maintenance • 14–6, *page 170*
Fire prevention • 14–7, *page 170*
Surveillance • 14–8, *page 171*
Storage • 14–9, *page 171*
Basic load storage ammunition holding areas in the United States • 14–10, *page 171*
General requirements for training operations • 14–11, *page 171*
Upload exercises • 14–12, *page 171*
Combat configured loads • 14–13, *page 172*
Aviation operations at BLAHAs • 14–14, *page 172*
Forward area rearm/refuel points (FARP) • 14–15, *page 172*
Airfield Operations • 14–16, *page 173*
Ports • 14–17, *page 174*
Static missile battery separation • 14–18, *page 174*
Separation from fuel • 14–19, *page 175*

Chapter 15
Wartime Operations, *page 183*
General requirements • 15–1, *page 183*
Theater and corps ammunition storage areas • 15–2, *page 184*
Storage at the ASP and ATP • 15–3, *page 185*
Short-term ATP storage • 15–4, *page 185*
Field storage and handling areas. • 15–5, *page 185*
Transportation within the theater of operations • 15–6, *page 186*
Modular storage • 15–7, *page 186*
Ammunition turn-in at the cessation of hostilities • 15–8, *page 187*
Emergency destruction of ammunition • 15–9, *page 187*

Contents—Continued

Chapter 16
Storage and handling of commercial explosives, *page 189*
Background • 16–1, *page 189*
Use • 16–2, *page 189*
Procedures • 16–3, *page 189*
Commercial dynamite • 16–4, *page 189*

Chapter 17
Demilitarization, *page 190*
Demilitarization • 17–1, *page 190*
Methods • 17–2, *page 190*
Safety precautions • 17–3, *page 190*
Site selection for burning or demolition grounds • 17–4, *page 191*
Burning sites • 17–5, *page 191*
New demilitarization technologies • 17–6, *page 191*

Chapter 18
Maintenance, *page 192*
General information • 18–1, *page 192*
Safety requirements • 18–2, *page 192*
Operational shields • 18–3, *page 193*
Equipment for shielded operations • 18–4, *page 195*
Tools, equipment and supplies • 18–5, *page 195*
Protection of primers • 18–6, *page 195*
Cleaning ammunition • 18–7, *page 195*
Spray painting • 18–8, *page 195*
Electrostatic paint spraying and detearing of inert items in non-hazardous locations • 18–9, *page 196*
Infrared ray drying • 18–10, *page 196*
Drying freshly painted loaded ammunition • 18–11, *page 197*
Heat sealing equipment • 18–12, *page 197*
Soldering containers • 18–13, *page 197*
Thread cleaning • 18–14, *page 197*
Inert scrap components and packaging materials • 18–15, *page 198*
Sand or shotblasting operations • 18–16, *page 198*
Location of sand or shotblasting operations in explosives storage areas • 18–17, *page 198*
Sand or shotblasting operations within a building in an operating line • 18–18, *page 199*
Electrical testing of ammunition and ammunition components • 18–19, *page 199*
Profile and alignment gaging operations • 18–20, *page 199*
Collection of explosives dusts • 18–21, *page 200*
Location of collection chambers • 18–22, *page 200*
Design and operation of collection systems • 18–23, *page 200*
Solid propellant collection • 18–24, *page 201*
Destruction of solid wastes • 18–25, *page 201*
Assembly and crimping of complete rounds • 18–26, *page 201*
Rotational speeds for equipment used in field ammunition operations • 18–27, *page 202*
Machining of explosives • 18–28, *page 202*
Operational shields for munitions loading • 18–29, *page 203*

Chapter 19
Special storage procedures for waste military munitions, *page 203*
Scope and applicability • 19–1, *page 203*
Waivers and exemptions • 19–2, *page 203*
Requirements for Storage of Waste Military Munitions under CE • 19–3, *page 204*
Other storage standards • 19–4, *page 204*
Reporting • 19–5, *page 204*

Contents—Continued

Closure of facilities storing waste munitions under CE • 19–6, *page 205*
Closure of facilities storing waste military munitions under RCRA • 19–7, *page 205*

Appendixes

A. References, *page 206*

B. Earth Electrode Subsystem Test and Inspection, *page 210*

C. Inspection and Test of Static Electricity Charge Dissipation Subsystem, *page 217*

D. Inspection and Test of Lightning Protection Subsystems, *page 219*

E. Field Expedient Grounding Techniques, *page 222*

F. Safe Conveyor Separation for Ammunition/Explosives, *page 222*

G. Standard designs for explosives facilities, *page 229*

H. The 100–Foot Zone of Protection, *page 230*

I. Revised Hazard Division 1.2 criteria, *page 238*

J. Explosives Safety Program Management, *page 244*

K. Investigating and Reporting Unpermitted or Uncontrolled Detonation, Release, Discharge, or migration of Waste Military Munitions, *page 250*

Table List

Table 3–1: Extinguishing agents for fires, *page 18*
Table 3–2: Fire symbol hazards and actions, *page 18*
Table 3–3: Chemical hazard symbols and actions, *page 19*
Table 3–4: Emergency withdrawal distances for nonessential personnel, *page 20*
Table 3–5: Fire divisions hazards, *page 20*
Table 3–6: Fire division symbols, *page 21*
Table 3–7: Chemical agents and fillers contained in ammunition and the chemical hazard symbols required in storage, *page 21*
Table 4–1: EIDS and EIDS ammunition hazard divisions, *page 32*
Table 4–2: QD criteria for configuration of HD 1.6 components and assemblies with other HD components, *page 32*
Table 4–3: Storage Compatibility Mixing Chart, *page 32*
Table 5–1: HD 1.1 inhabited building and public traffic route distances, *page 43*
Table 5–2: Minimum primary fragment protection distance expressed in feet for selected HD 1.1 Items, *page 45*
Table 5–3: HC/D 1.1 intraline distances in feet from PESs other than earth-covered magazines[3], *page 46*
Table 5–4: HD 1.1 intraline distances from earth-covered magazines (type of distance protection to be provided to ES), *page 47*
Table 5–5: HC/D 1.1 intermagazine hazard factors and distances, *page 48*
Table 5–6: HC/D 1.1 Guide for Intermagazine Distance [1,8,9], *page 50*
Table 5–7: Personnel protection distances from aboveground detonations, *page 50*
Table 5–8: Required blast overpressure protection distance in feet for nonessential personnel at ranges used for detonating
ammunition for demilitarization, demonstration, or explosives ordnance disposal, *page 51*
Table 5–9: Thermal flux calculations, *page 51*
Table 5–10: Impulse noise protection decision table, *page 63*
Table 5–11: Impulse noise zones measured in feet from intentional detonations, *page 63*
Table 5–12: Impulse noise B-duration (estimated for various NEWs and distances), *page 64*
Table 5–13: Impulse noise zones and required protections with maximum permissable number of detonations per day, *page 67*
Table 5–14: Q-D for unprotected aboveground service tanks supporting explosives storage or operating complexes, *page 68*
Table 5–15: HD 1.2 distances, *page 68*
Table 5–16: HD 1.3 QD, *page 69*

Contents—Continued

Table 5–17: HC/D 1.4 quantity-distance, *page 71*
Table 5–18: QD criteria for HD 1.6 ammunition, *page 71*
Table 5–19: HD 1.1.QD for military aircraft parking areas, *page 72*
Table 5–20: Application of ammunition and explosives safety distances between various types of facilities, *page 73*
Table 5–21: Liquid propellant HE (TNT) equivalents [2,3,4,5,6,7], *page 74*
Table 5–22: Factors for converting gallons of propellant into pounds[1], *page 75*
Table 5–23: Liquid propellants hazard and compatibility groups, *page 75*
Table 5–24 (PAGE 1): QD for propellants, *page 77*
Table 5–24 (PAGE 2): QD for propellants—Continued, *page 77*
Table 5–24 (PAGE 3): QD for propellants—Continued, *page 78*
Table 5–25: Hazard group IV separation distances, *page 78*
Table 5–26: Chamber separation, *page 78*
Table 5–27: Distance to protect against ground shock, *page 80*
Table 5–28: Distance to protect against hard rock debris, *page 81*
Table 5–29: Distance to protect against soft rock debris, *page 82*
Table 5–30: Functions of loading density, *page 82*
Table 5–31: Values for Ratio $D_{HYD}/V_E^{1/2.8}$, *page 85*
Table 5–32: Scaled IBD for airblast without mitigating, *page 86*
Table 5–33: Distance versus overpressure along the centerline, *page 86*
Table 5–34: Effective overpressure at the opening, *page 87*
Table 5–35: Allowable overpressure at IBD, *page 87*
Table 5–36: IBD distances to protect against airblast, *page 88*
Table 6–1: Grounding system inspection and test requirements, *page 110*
Table 6–2: Ground rod quantity requirements, *page 110*
Table 6–3: Minimum safe distance from transmitter antennas, *page 111*
Table 6–4 (PAGE 1): Safe separation distance equations, *page 113*
Table 6–4 (PAGE 2): Safe separation distance equations, *page 113*
Table 8–1: Intermagazine separation for barricaded storage modules for mass detonating explosives, *page 136*
Table 11–1: Mixed class/division for QD computations, *page 147*
Table 11–2 (PAGE 1): Quantity-distance separations for pier and wharf facilities, *page 148*
Table 11–2 (PAGE 2): Quantity-distance separations for pier and wharf facilities--Continued, *page 148*
Table 11–3: Variation of MPS QD factors with loadout, *page 148*
Table 12–1: Lightning protection systems, *page 154*
Table 14–1: Quantity-distance table for basic load ammunition holding areas, *page 177*
Table 14–1A: Quantity-distance for armored vehicles, *page 177*
Table 14–2: Minimum Quantity-Distance for hardened aircraft shelters (HAS) for propagation prevention, *page 179*
Table 14–3: Minimum Quantity Distance for Hardened Aircraft Shelters for Asset Preservation, *page 180*
Table 14–3A: Quantity-distance from a U.S. third-generation hardened aircraft shelter PES to an unhardened exposed site[1,2], *page 180*
Table 14–4: Quantity-distance for assets preservation at airfields, *page 181*
Table 15–1: Wartime compatibility chart, *page 188*
Table 15–2: Q-D for field storage and handling areas., *page 189*
Table 16–1: Turning of commercial dynamite, *page 190*
Table B–1: Test probe C and P distances, *page 213*
Table F–1: Safe conveyor spacing, *page 222*
Table I–1A: Hazard subdivision 1.2.1 QD for munitions with NEWQD > 1.60 pounds, *page 241*
Table I–1B: Minimum fragment distances for HD 1.2.1 items stored in structures, which can contribute to the debris hazard, *page 242*
Table I–2: Hazard subdivision 1.2.2 Quantity-Distances (IBD, PTR, and ILD) for munitions with NEWQD ≤ 1.60 pounds, *page 243*
Table I–3: Summary of hazard subdivisions 1.2.1, 1.2.2, and 1.2.3 quantity-distances (NOTE: all distances shown are in feet), *page 244*
Table I–4: Hazard subdivision 1.2.1, 1.2.2, and 1.2.3 mixing rules, *page 244*

Contents—Continued

Table J–1: Army Explosives Safety Courses, *page 249*

Figure List

Figure 2–1 (PAGE 1): Risk management, *page 7*
Figure 2–1 (PAGE 2): Risk management, *page 8*
Figure 3–1: Fire symbol 1 — mass detonation, *page 22*
Figure 3–2: Fire symbol 2 — explosion with fragments, *page 23*
Figure 3–3: Fire symbol 3 — mass fire, *page 24*
Figure 3–4: Fire symbol 4 — moderate fire, *page 25*
Figure 3–5: Chemical hazard symbol 1, *page 26*
Figure 3–6: Chemical hazard symbol 2, *page 27*
Figure 3–7: Chemical hazard symbol 3, *page 28*
Figure 5–1: Impulse noise zones for various B-durations and peak sound pressures, *page 89*
Figure 5–2: Impulse noise zones from intentional detonations, *page 90*
Figure 5–3: Intermagazine hazard factors, *page 91*
Figure 5–4: Intermagazine hazard factors, *page 92*
Figure 5–5: Intermagazine hazard factors, *page 92*
Figure 5–6: Intermagazine hazard factors, *page 93*
Figure 5–7: Intermagazine hazard factors, *page 93*
Figure 5–8: Intermagazine hazard factors, *page 94*
Figure 5–9: Intermagazine hazard factors, *page 95*
Figure 5–10: Typical Underground Facilities, *page 96*
Figure 5–11: Constant Pressure Contour, *page 97*
Figure 5–12: Debris Dispersal Functions, *page 98*
Figure 6–1: Typical Ground Rod Installation, *page 114*
Figure 6–2: Typical multiple ground rod installation, *page 114*
Figure 6–3: Typical ground loop installation, *page 115*
Figure 6–4: U.S. Navy designed earth electrode subsystem, *page 116*
Figure 6–5: Typical grid installation, *page 117*
Figure 6–6: Typical radial installation, *page 118*
Figure 6–7: Typical buried plates or cones installation, *page 119*
Figure 8–1: Typical 8–cell module, *page 136*
Figure 8–2: Determination of barricade height, *page 137*
Figure 8–3: Determination of barrricade length, *page 138*
Figure 8–4: Barricade locations, *page 139*
Figure 14–1: Hardened aircraft shelter an as exposed site, *page 181*
Figure 14–2: Hardened aircraft shelter as a PES, *page 182*
Figure 14–3: Igloo Q-D angles, *page 183*
Figure B–1: Measurement of soil resistivity, *page 214*
Figure B–2: Resistivity determination of a small site, *page 215*
Figure B–3: Fall of potential method for measuring the resistance of earth electrodes, *page 216*
Figure B–4: Fall of potential resistance to earth test, *page 217*
Figure D–1: Testing lightning protection system, *page 221*
Figure H–1: Zone of protection test, *page 232*
Figure H–2: Zone of protection for integral systems, *page 233*
Figure H–3: Illustrated zone of protection, *page 234*
Figure H–4: Zone of protection geometric concept, *page 235*
Figure H–5: Adequate protection not penetrating earth cover, *page 236*
Figure H–6: Adequate protection penetrating earth cover, *page 237*
Figure H–7: Inadequate protection penetrating earth cover, *page 237*

Glossary

Index

Chapter 1
Introduction

1–1. Purpose

This pamphlet explains the Army's safety criteria and standards for operations involving ammunition and explosives prescribed by AR 385–64, for the United States Army, GOCO facilities, and contractor operations on Government property.

1–2. References

Required and related publications are listed in appendix A.

1–3. Explanation of abbreviations and terms

Abbreviations and special terms used in this pamphlet are explained in the glossary.

1–4. Implementation

a. This pamphlet provides the guidance to implement AR 385–64. Adhering to its procedures will ensure safe and proper storage and handling of ammunition and explosives. Mandatory requirements are those in which the term "shall," "will," or "must" is used and no deviation is permitted without specific written authority in the form of a waiver or exemption as detailed in AR 385–64. Advisory provisions are those in which the term "may" or "should" is used, and no deviation is permitted unless local waivers are authorized in writing by local commander or his or her designee. In new construction or building modification, advisory standards be come mandatory.

b. Some of the procedures used in carrying out the U.S. Army Explosives Safety Program are outlined in publications that are not published by the Army and are not available through standard supply channels. For example, several are published by the National Fire Protection Association (NFPA) and some by the American National Standards Institute (ANSI).

1–5. Policy on existing explosives facilities

A program should be locally developed to correct deficiencies if such deficiencies exist where previously constructed explosives facilities do not comply with current safety standards. The program priority items should be based on a hazard analysis and risk assessment of each violation.

Chapter 2
General Safety Precautions

2–1. Hazard analysis and risk assessment

All operations involving ammunition and explosives will be reviewed to identify and manage the risk associated with the operation (see fig 2–1).

a. A risk assessment shall be performed on all new or modified industrial operations and facilities involving ammunition and explosives. Based upon this assessment, engineering design criteria for the facility and/or operation will be developed to select appropriate equipment, shielding, engineering controls, and protective clothing for personnel. The assessment will review such factors as—

(1) Initiation sensitivity;

(2) Quantity of materials;

(3) Heat output;

(4) Rate of burning;

(5) Potential ignition and initiation sources;

(6) Protection capabilities of shields, various types of clothing, and fire protection systems; and,

(7) The acute and chronic health hazards of hot vapors and combustion products on exposed personnel.

b. Ammunition and explosives operations will require an operational or task hazard analysis prior to writing a new standing operating procedure (SOP) for an ammunition or explosives operation or before the biannual review of an existing ammunition or explosives operation.

c. Personnel conducting the hazard analysis will be knowledgeable—

(1) In ammunition and explosives safety;

(2) In the task to be performed; and,

(3) In the methods used to conduct a hazard analysis.

2–2. Personnel qualifications

Personnel working with explosives will be trained in the tasks to be performed. They must understand the hazards, standards, procedures, and precautions that apply to their work.

2–3. Use of written standards

Written standards must be developed and used for each explosives operation. These standards may be based on standards found in Army publications such as regulations or technical manuals, or in higher headquarters standard publications.

a. SOPs for all explosives operations ensure workers have the information necessary to perform their tasks safely. Each worker will read the SOP or have the SOP read aloud before starting the operation. SOPs must be readily available at the work site. Applicable parts of the SOP will be clearly posted at all workstations in the operation, such as bays within a building. When posting within the work site is not practical, the SOP will be posted at the entrance to the site.

b. All SOPs for explosives operations will identify potentially hazardous items or conditions. Explosives workers observing hazardous or potentially hazardous conditions will notify their supervisor immediately. Supervisors will correct the operations or practices which, if allowed to continue, could reasonably be expected to cause death or serious physical harm to personnel or major system damage, or endanger the installation's capacity to accomplish its mission.

c. Procedures will be written in English and in the language workers understand if they do not understand English.

d. Written procedures are not required for explosives ordnance disposal (EOD) emergency operations in connection with an approved render-safe procedure.

2–4. Personnel and explosives limits

Operations must be conducted in a manner which exposes the minimum number of people to the smallest quantity of explosives for the shortest period of time consistent with conducting the operation. Examples are as follows:

a. Tasks not necessary to the operation will be prohibited within the immediate area of the hazard produced by the operation.

b. Personnel limits must be clearly posted for each operation and must not be exceeded during the operation. Limits for explosives operations will be included in the SOP.

c. Where concurrent operations must be performed in a single building, the layout will be planned to protect from blast overpressure and to provide separation of dissimilar explosives hazards by using substantial dividing walls, barricades, or other means to ensure maximum personnel protection.

d. Personnel not needed for the operation will be prohibited from visiting. This does not prohibit official visits by safety, quality control (QC), management, or inspection personnel, up to established personnel limits.

e. Each worker will ensure explosives limits for the work area are not exceeded. Limits will be expressed in total net explosive weight (NEW), number of units, or the number of trays, boxes, pallets, or other units which are more easily controlled.

f. Explosives limits will be based on the minimum quantity of explosives sufficient for the operation. Limits will not exceed the quantity used during half a work shift, and will be consistent with quantity-distance (Q-D) separation criteria.

g. The maximum amount of explosives of each hazard division (HD) allowed will be clearly posted in each room, cubicle, magazine, or building used for storing explosives. For operating locations, post the explosives limits for the operation being conducted. Material limits need only be posted in storage magazines if the limit is not the same as that for other magazines in the block or if the limit would not be readily apparent due to some unusual circumstances.

2–5. Handling and movement precautions

Munitions and/or explosives will be handled only by trained personnel who understand the hazards and risks involved in the operation. Supervisors will be trained to recognize and abate hazards associated with their operations.

a. Detonators, initiators, squibs, blasting caps (electrical and nonelectrical), and other initiating devices will be

carried in protective containers. The containers must prevent item-to-item contact and be marked to identify the contents.

b. Bale hooks will not be used to handle explosives.

c. Nails may be used to secure covers or repair explosives containers only if there is no hazard to the explosive item or of penetrating protective coverings.

d. Nails and other packing materials will comply with technical packing orders, military specifications, or Department of Transportation (DOT) specifications applicable to the item.

e. Munitions will not be tumbled, dragged, dropped, thrown, rolled, or walked. Containers designed with skids may be pushed or pulled for positioning, unless otherwise marked on the container.

f. Conveyors, chutes, hand trucks, and forklifts may be used in atmospheres and locations where they will not create hazards.

g. Sectionalized roller conveyors moving munitions or explosives will be supported and the sections interlocked or secured. Boxes of explosives will not be used to support conveyors.

h. Safety handtools will be constructed of wood or other nonsparking or spark-resistant materials such as bronze which, under normal conditions of use, will not produce sparks. Only properly maintained safety handtools will be used for locations having hazardous concentrations of flammable dusts, gases, vapors, or exposed explosives.

(1) Handtools or other implements used near hazardous materials must be handled carefully and kept clean. All tools will be checked for damage at the start and on completion of work.

(2) If it is necessary to use ferrous metal handtools because of their strength, the immediate area should be free from exposed explosives and other highly combustible materials except in specific operations approved by the installation safety officer.

(3) Safety handtools containing copper or zinc, such as brass or bronze, will not be used in proximity to lead azide or residuals from the treatment of lead azide.

2–6. Housekeeping

Ammunition storage, handling, and operating facilities and areas will be maintained free of debris and rubbish and accumulation of oily rags or other material subject to spontaneous ignition.

a. Waste materials.

(1) Waste materials, such as oily rags, hazardous materials, such as explosives scrap, and wood, paper, and combustible packing materials, will not be mixed. Each of these categories of waste will be carefully controlled and placed in separate approved, properly marked containers. The containers will be placed outside the facilities, except for containers required at the work location during operations. Working location containers will be emptied, as needed but at least once each shift.

(2) Containers for explosive waste will have covers, preferably self-closing. Explosives hazardous waste includes scrap powder, initiating or sensitive explosives, sweepings from open explosive areas, and rags contaminated with these explosives.

(a) Receptacles should have enough liquid, normally water or oil, to cover the scraps or rags if this does not add to the hazard.

(b) No. 10 mineral oil is useful for covering white phosphorous (WP), pyrotechnic, tracer, flare, and similar mixtures. If water is used to cover such materials, scrap should be put in so it is immediately immersed to reduce any production of dangerous gases.

(3) Hazardous waste material will be removed from operating buildings to the disposal area (or an isolated, temporary collection point) at frequent intervals and before leaving at the end of the duty day or shift. When isolated collection points are used, time and quantity limits, which comply with environmental regulations, will be set up to ensure timely movement of the material to the disposal area. Hazardous material should not be “stored” in the disposal area but disposed of as soon as possible after arrival.

(4) Hazardous wastes will be disposed of in authorized facilities. A SOP will cover disposal operations. The

organization responsible for hazardous waste disposal will include disposal facilities on waste disposal permits, as required by the Environmental Protection Agency (EPA).

b. Cleaning. A regular cleaning program will be established. To ensure safety, frequency, especially in operating buildings, will depend on local conditions.

(1) General cleaning will not be done during an explosives operation or while explosives are in operating buildings.

(2) Where there are exposed explosives or a risk from accumulating explosives, structural members, radiators, heating coils, pipes, and electrical fixtures will be kept clean.

c. Sweeping compounds.

(1) Sweeping compounds containing wax or oil will not be used on conductive floors.

(2) Cleaning agents that include caustic alkalis must not be used in locations containing exposed explosives because sensitive explosive compounds may form.

(3) Where there may be exposed explosives on the floor, hot water or steam is the preferred cleaning method. When sweeping compounds must be used, they will be nonabrasive.

(4) Sweeping compounds may be combustible but will not be volatile (closed cup flashpoint will not be less than 230 degrees Fahrenheit).

d. Explosives recovery and re-use. All loose explosives recovered as sweepings will be destroyed.

2–7. Testing, disassembly, and modification of explosives items

This paragraph gives precautions to take during testing, disassembly, and modification of explosives items.

a. All testing, disassembly, and modification operations will be done by qualified technicians according to approved SOPs. The supervisor will provide any necessary drawings and sketches.

b. Modification, testing, or disassembly of explosives items is permitted for any one of the following circumstances:

(1) When authorized by approved publications.

(2) When approval has been granted by the MACOM and the item manager or system program office.

(3) When EOD personnel require disassembly for technical intelligence or emergency render-safe operations.

(4) When conducted as part of an approved organization mission that includes research, development, or test of explosives items or explosive equipment.

c. Operational shields, remote controlled devices, fire protection systems, and ventilator systems will be used where needed to protect personnel and property.

(1) Operations such as continuity checks of electrically actuated explosives devices, propellant cutting, explosives component assembly, modification, or disassembly and demilitarization will require proven operator protection.

(2) Operational shields and remote control systems will be designed and tested to protect completely against all potential hazards. These hazards may include explosion, fragments, fire, heat, radiation, high-intensity light, or toxic vapors, dependent on the explosive material involved.

(3) When protective devices of a specific design are required by a technical manual (TM), the TM managing agency must ensure that the devices have been tested and are safe.

(4) When a using command establishes a requirement for protective devices, that command must ensure that the devices are of a safe design.

2–8. Explosive ordnance disposal training aids

a. EOD training aids are unique in their requirements for realism. The EOD requirements listed below are required for ensuring that EOD training aids are properly maintained. The Commander of each EOD unit having training aids, will—

(1) Ensure that no live explosive or ammunition is mixed with the training aids.

(2) Ensure that each training aid larger than .50 caliber is marked as being inert. Small arms ammunition which is .50 caliber or less may be marked by marking the container and the number of rounds contained in the box.

(3) Ensure that each training aid is marked with a serial number. Small arms ammunition containers may be marked instead of each item.

b. The accountability program for controlling EOD training aids will include the following:

(1) A 100 percent serial number inventory conducted yearly.

(2) A formal report of the results of the inventory.

(3) A file on record at EOD headquarters which shows by serial number and type where EOD training aids are located.

c. When an EOD training aid is released from EOD control, it will comply with the requirements of paragraph 13–6 for marking of inert ammunition.

2–9. Field safety

Using units must keep ammunition and explosives properly packed to the maximum extent possible. This practice is critical to safety and quality.

a. Ammunition and explosives must remain packed until immediately prior to use. Unpack only the quantity expected to be immediately fired. Save all packing material until exercise is complete for possible use in repack.

b. Properly repack ammunition before transporting on motor vehicles, aircraft, or watercraft.

c. It is especially important to replace safety devices before repacking; for example, shorting clips on 2.75–inch rockets, electrical shunts on Hoffman devices, and pads protecting primers on gun and mortar ammunition.

d. Ammunition which has misfired or has been classified as unserviceable must be indelibly marked and segregated from serviceable ammunition.

2–10. Accident reporting

Ammunition and explosives accidents shall be reported and investigated in accordance with AR 385–40. Malfunctions must be reported in accordance with AR 75–1.

2–11. Rod and gun clubs

Each club that handloads ammunition on Army property must operate according to written explosives safety standards. A qualified member will be designated to ensure explosives safety criteria are developed and enforced.

a. Retail stores. Where only retail sales are made, paragraph 5–1b of this pamphlet will apply.

(1) As determined by the installation commander, compliance with Q-D standards will not be required for reasonable quantities of small arms ammunition, such as 100 pounds of propellant, and 25,000 primers packed in their shipping containers.

(2) HD 1.3 propellant will not be placed in other containers if it would result in extreme confinement if ignited.

(3) When complying with (1) and (2) above, an exception to Q-D and fire symbol requirements for HD 1.1 primers will apply. Fire symbol 3 may be used to designate the presence of propellant and primers. The symbol need not be changed during temporary periods when the propellant has been sold out, but primers are still in stock.

b. Handloading. Handloading operations will be done in a room or building solely used for this purpose. The safety requirements outlined above for a retail store apply, as well as the following:

(1) A written procedure approved by the installation safety office will be developed and posted.

(2) Only authorized personnel, trained in using handloading equipment and knowledgeable about safety provisions and hazards involved, will be allowed loading privileges. Reloaders will wear safety goggles or face shields. Trainees must be strictly supervised.

(3) Smoking, matches, or flame-producing devices will not be allowed in any loading or storage location.

(4) No more than 10 pounds of propellants; 10,000 primers, and 5,000 assembled rounds will be allowed in the handloading room at one time.

(5) Storage lockers will be provided for the explosives. Only quantities required to sustain a continuous operation will be transferred to the loading point. Only one packing tray at a time will be removed from primer storage. Unused components will be repacked in their original containers and returned to the storage locker at the end of each loading operation. Lockers will be locked when not in use.

(6) Floors and walls must be free of cracks that could accumulate explosives dust and foreign materials. Good housekeeping practices will be observed at all times.

(7) In case of a spill, all operations will stop until the explosives are cleaned up. Place all salvaged propellant in a metal container with water. All damaged components, or damaged complete rounds will be placed in a separate, properly marked container. Salvaged propellant, damaged rounds or components, and empty explosives containers will be disposed of by qualified personnel.

(8) Only commercial-type loading tools, dies, scales, powder measures, and other equipment will be used during handloading operations.

(9) Bullet molding will be done outside the handloading room.

2–12. Public demonstrations, exhibitions, and celebrations

a. Participation of Army personnel (military of civilian) in pubic demonstrations, exhibitions, and celebrations involving the use of military or commercial explosives and pyrotechnics is not advisable, except in rare instances.

b. Requests for participation of Army personnel in such demonstrations, exhibitions, an celebrations, either in an official or semiofficial capacity, will be discouraged. In the event such official participation is considered advisable, detailed plans for demonstrations, exhibitions, or celebrations involving Army personnel, activities, equipment, or materials will be submitted through safety channel to the MACOM commander for approval.

c. Commercial fireworks used in holiday celebrations on the installation will be transported, set up, and fired on the same day only by commercial firms or licensed pyrotechnic technicians in accordance with local laws and NFPA

Standard 1123. Commercial fireworks confiscated or found on an installation will be placed in isolated storage until qualified EOD personnel destroy them.

2–13. Static or public display

Live explosives items will not be used for display or loaded, or installed on display vehicles or aircraft. Explosives items will not be rendered inert for this purpose unless authorized by the specific item manager or the system program office.

a. Live or expended ammunition must be removed from vehicle or aircraft gun system, if feasible. If not feasible, gun systems must be rendered mechanically and electrically safe before the aircraft or vehicle is placed on display.

b. Operational vehicles and aircraft may be displayed without removing explosives components from egress or life support systems. Appropriate safety precautions in accordance with technical manuals will be taken, and visitors will not be allowed near actuating controls.

c. When feasible, ejection cartridges will be removed from external release systems. If not, ensure that safety pins or devices cannot be easily removed and firing circuits are isolated (for example, circuit breakers pulled).

d. Procedures for static display of vehicles and aircraft are contained in specific vehicle or aircraft technical manuals.

2–14. Explosives training aids for military working dogs

The use of explosives training aids for training military working dogs is addressed in paragraph 5–14 and AR 190–12 and DA Pam 190–12.

2–15. Hunting

Written permits authorizing hunting within an explosives area may be issued by the installation commander if hunting conditions can be controlled to ensure life and property are not endangered.

a. Hunting will not be allowed in surety “limited” storage and operating areas.

b. Where hunting is allowed, maps will clearly define the “hunting” and “no hunting” areas. Each hunter must be thoroughly briefed on the respective areas and local arrangements.

c. All hunting will conform to applicable State, Federal, or host nation regulations.

d. Hunting in dedicated impact areas (real property contaminated with explosives and ammunition) is not authorized.

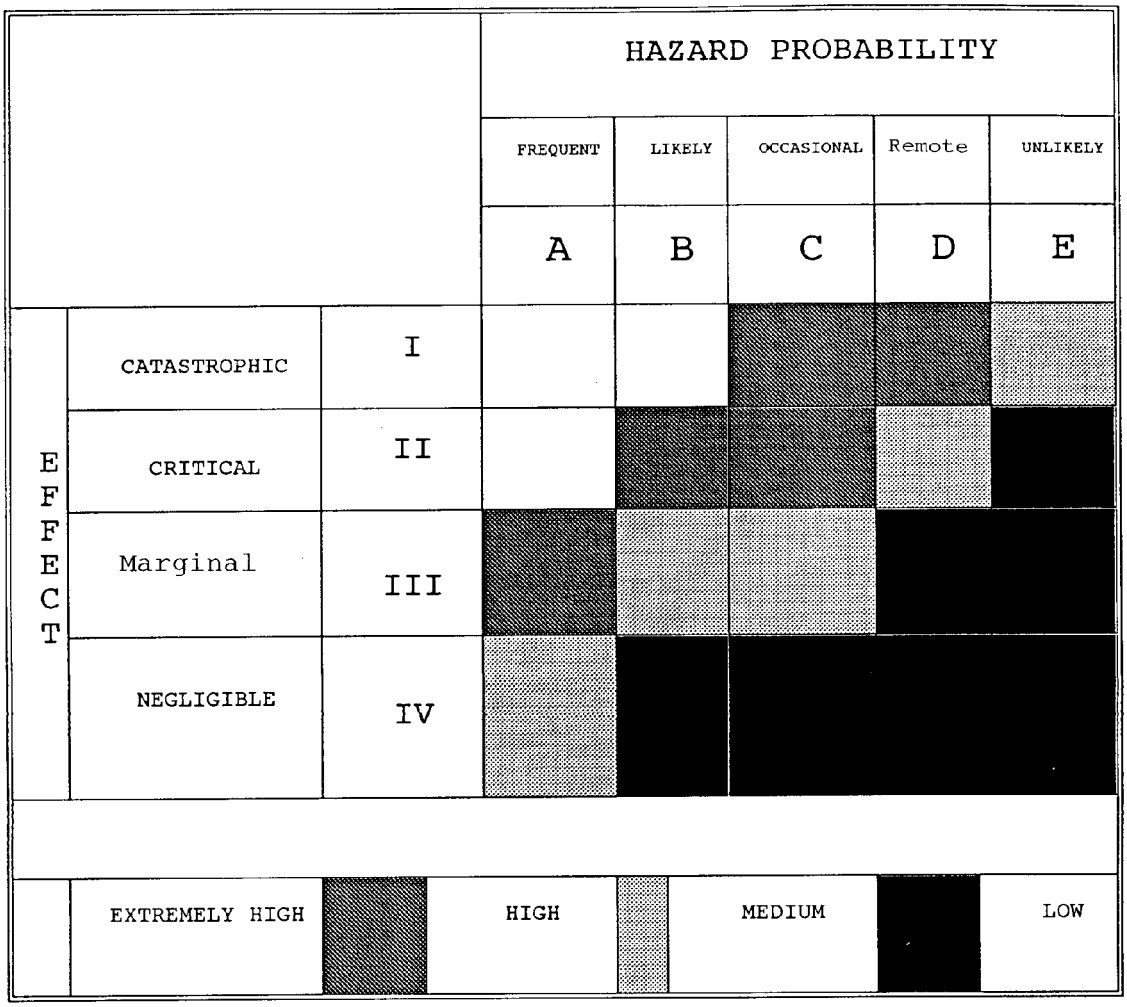

SOME FACTORS TO CONSIDER IN RISK MANAGEMENT
Level of activity
Inherent dangers of equipment used
Operational conditions
Personnel/organization proficiency
Weather
Condition of personnel
Availability of protective equipment
Accident frequency
Hazardous materials used
Environmental concerns
Complexity of movement
Supervision
Complexity of mission
Level of planning
Adequacy of site
Adequacy of directions given

Figure 2-1 (PAGE 1). Risk management

Factors to Consider in Risk Management

EFFECT

1. CATASTROPHIC. Death or permanent total disability, system loss, major property damage.

2. CRITICAL. Permanent partial disability, temporary total disability longer than 3 months, major system damage, significant property damage.

3. MARGINAL. Minor injury, lost workday accident, compensable injury/illness, minor property damage.

4. NEGLIGIBLE. First aid or minor supportive medical treatment, minor system impairment.

PROBABILITY

A. FREQUENT. Individual soldiers/item occurs often in career/equipment service life. All soldiers exposed or continuously experience.

B. LIKELY. Individual soldiers/item occurs several times in career/equipment service life. All soldiers exposed or occurs frequently.

C. OCCASIONAL. Individual soldiers/item occurs sometime in career/equipment service life. All soldiers exposed or occurs sporadically or several times in inventory service life.

D. REMOTE. Individual soldiers/item possibly occurs in career/equipment service life. All soldiers exposed to remote chance of occurrence; expected to occur sometime in inventory service life.

E. UNLIKELY. Individual soldiers can assume will not occur in career/equipment service life. Possible for all soldiers to be exposed, but improbable; occurs very rarely. NOTE: Unit experience and exposure affect probability of occurrence.

RISK LEVELS

EXTREMELY HIGH RISK: Loss of ability to accomplish mission.

HIGH RISK: Significantly degrades mission capabilities in terms of required mission standards.

MEDIUM RISK: Degrades mission capabilities in terms of required mission standards.

LOW RISK: Little or no impact on accomplishment of mission

RESIDUAL RISK: Risk remaining after risk reduction efforts.

Figure 2-1 (PAGE 2). Risk management

Chapter 3
Fire Prevention, Protection, and Suppression

3–1. Fire prevention management

a. Fire and excessive heat are two of the greatest hazards to explosives. This chapter gives procedures for dealing with these hazards.

b. Fires which may occur in buildings or magazines containing ammunition or explosives will vary in intensity and effect, depending on the material involved in the fire. Certain explosives will ignite immediately on contact with a spark or flame or when subjected to frictional heat or concussion. Some explosive substances may burn freely while others will be subject to explosion while burning or will develop such intense heat, as in the case of solid and liquid propellants, that firefighting efforts will be practically impossible. Firefighting forces will be well acquainted with the hazards involved in each fire hazard group and the best methods of fighting fires of all kinds of materials under their protection. They should also know how to use personnel protective devices required for the various types of fires.

c. Each installation involved in explosives operations will develop prefire plans in accordance with AR 420–90. Plans will cover all explosives areas and possible exposures of explosives to fire. In addition to the requirements of AR 420–90, the overall plan will specify responsible individuals and alternates, their organizations and training, and include a description of the emergency function of each department or outside agency. Duties of personnel spelled out in the plan will include the following:

(1) Reporting the fire.

(2) Directing orderly evacuation of personnel.

(3) Notifying personnel in nearby locations of impending dangers.

(4) Activating means of extinguishing or controlling the fire.

(5) Meeting and advising the firefighters on the details of the fire up to the time of their arrival.

d. Each Army fire station central communications center will have an area map showing all explosives areas or locations. Locations with less than 1,000 rounds of HD 1.4 small arms ammunition (.50 caliber or less) are exempt.

e. Personnel in charge of explosive operations will notify the fire department when there is a change in the type of explosives being worked which would require a change of fire or chemical hazard symbols.

f. Where explosives, highly flammable, or energetic materials are involved, a written permit is required for using heat-producing equipment capable of reaching a temperature higher than 228 degrees Fahrenheit (F) (109 degrees Celsius (C)). (See para 3–7a and AR 420–90 for additional guidance.)

g. Matches or other flame or spark producing devices will not be permitted in any magazine area or explosives area unless the commanding officer or his or her designated representative provides written authority. When such authority has been received, a carrying device, too large to fit into the pockets, will be used for matches, lighters, and similar materials.

h. Carrying and using "strike anywhere" (kitchen) matches are prohibited.

i. All flashlight or storage-battery lamps used in buildings containing hazardous quantities of exposed explosives or flammable vapors will be certified for the hazardous environment by the United States Bureau of Mines or by a similarly recognized testing laboratory for that specific type of exposure.

3–2. Smoking

a. Smoking is prohibited in any explosives storage or operating area or location, except as permitted below.

(1) Smoking may be allowed within an explosives area or location in specially designated and posted "authorized smoking areas." A certification of approval by the installation commander or his or her designated representative (fire chief, fire marshal, or fire warden), in coordination with the safety office, will be displayed in each designated smoking location.

(2) In "Authorized Smoking Areas," the following minimum precautions will be taken:

(a) Suitable receptacles for cigarette and cigar butts and pipe heels will be provided. (Smoking residue will not be placed in trash receptacles until it has been determined that no flammable or combustible risk exists.)

(b) If electric power is available, push-button electric lighters that cut off when pressure is released will be used. Lighters will be permanently installed to prevent removal and use outside the designated area.

(c) Where intervening noncombustible walls are not available to separate a potential smoking area from an area

where ammunition and explosives are present, the smoking area shall be separated by a distance of at least 50 feet from the ammunition or explosives.

(d) At least one portable fire extinguisher with a 1A or greater rating will be provided at each designated smoking area.

(e) Personnel whose clothing is contaminated with explosives or other hazardous materials will not be allowed in smoking areas.

(f) Personnel working with hazardous chemicals or material must wash their hands before smoking.

(g) A "No Smoking" sign will be posted at each entrance to an explosives storage area. Where applicable, include a notice that flame-producing devices must be turned over to the entry controller or placed in the container provided.

b. Smoking is prohibited in, on, or within 50 feet of any motor vehicle, trailer, railcar, or material handling equipment loaded with explosives items.

c. Smoking is prohibited in any explosives-laden compartment of an aircraft.

3–3. Training

All operating personnel and firefighting forces involved with explosives must be trained in the precautions to be taken and how to fight fires. This training will include the application and meaning of each type fire hazard symbol, reporting fires, sounding alarms, area evacuations, and type and use of appropriate firefighting equipment. See tables at the end of this chapter.

3–4. Fire drills

Fire drills will be held within the explosives areas at intervals of 6 months or less. See table 3–4 for withdrawal distances.

a. Drills are conducted to train firefighting forces and ensure other personnel involved understand their duties and to evaluate fire alarm systems and firefighting equipment.

b. Fire drills involving a fire department response will be coordinated with the fire chief. This does not preclude unannounced tests of a fire department's response capabilities, provided adequate prior coordination with the fire chief is accomplished. Personnel who conduct these tests will make sure all personnel in the area are aware that an exercise, and not a real fire, is in progress.

3–5. Fire exit drills

a. Frequent fire exit drills should be held when warranted by the size of the building and the number of occupants. If emergency exits other than the usual doors and stairways are provided, these drills will cover their use.

b. All emergency exits will have exit signs which are clearly visible. Signs will be marked in accordance with AR 385–30.

3–6. Alarms

In addition to any automatic alarm systems required by AR 420–90 or other applicable directives, an audible, manually operated fire evacuation alarm system should be installed in each explosives operating building. All alarm systems will be clearly labeled.

3–7. Fire prevention requirements

a. Heat-producing devices. The use of devices which produce temperatures higher than 228 degrees F (109 degrees C) in any explosives area should be confined to essential, temporary use. Written instructions and a DA Form 5383–R (Hot-Work Permit), are required before beginning work. They should cover the location, purpose, duration, and details of general and explosives safety precautions to be used. Approved furnaces, electrical space heaters, and electrical cigarette lighters which are properly installed in an operating building are exempt. Bilingual instructions are required in foreign countries where local employees are included in the work force.

b. Control on wax pots.

(1) All wax pots regardless of size will be equipped with a power indicator light, lids with fusible link, and placed on noncombustible surfaces.

(2) Wax pots with a capacity in excess of one gallon must be equipped with dual temperature controls.

c. Vegetation control. Vegetation control measures within explosives areas and adjacent areas will be determined by the local commander. The following items should be considered in a vegetation control program:

(1) The primary purpose of vegetation control is to limit the probability of combustible vegetation causing an unacceptable risk to munitions in storage. Control of combustible materials, such as long dry grass or brush, heavy clippings, or dead wood, is designed to slow the spread of vegetation fires.

(2) Except for firebreaks, those grounds in or near explosives areas or locations should be maintained as unimproved grounds. Maintenance should be limited to prevent waste of natural resources (for example, erosion) and to prevent or suppress fires. Intensive maintenance should not be performed.

(3) Vegetation control requirements must be balanced with other operational factors such as cost to control, security,

erosion prevention, and passive defense (camouflage). Each of these factors must be weighed in determining the level of vegetation control in and around a particular explosives area.

(4) Varieties of vegetation that are resistant to burning should be used wherever feasible. If removal of vegetation will cause soil erosion, soil sterilants will not be used. Shrubs and trees planted on earth cover of magazines should be selected so that their weight or root system will not damage the structure. Dead or cut vegetation must not be allowed to accumulate.

(5) When animals are used for vegetation control, overgrazing of barricade surfaces and magazine earth cover must be avoided to prevent erosion.

(6) Where vegetation growth is ineffective in preventing erosion, a layer of approximately 2 inches of pressure-applied (Gunite) concrete or asphalt mixture may be used.

d. Firebreaks. Firebreaks will be kept clear of all readily combustible material, such as dry grass, dead wood, or brush. The level of live vegetation to be permitted in firebreaks (except those around earth-covered magazine ventilators) will be determined as outlined in c above.

(1) A 50–foot firebreak will be maintained around each aboveground magazine, operating building or location, outdoor storage site, and ready explosives facility.

(2) A 5-foot firebreak will be maintained around earth-covered magazine ventilators.

(3) A 5-foot firebreak will be maintained on both sides of fences.

e. Separation criteria for burning vegetation. Intentional burning will not be allowed within 200 feet of any explosives location. When wind velocity exceeds 5 miles per hour or is forecasted to exceed 5 miles per hour, burning operations will not take place.

(1) The windows, doors, and ventilators of magazines and/or buildings within 600 feet of burning operations will be closed.

(2) During burning operations, firebrands, sparks, and/or hot ashes must be controlled.

(3) Firefighting personnel and equipment determined necessary by the fire chief will be present during burning operations.

f. Flammable liquids for cleaning. Flammable liquids will not be used for cleaning within an explosives area or near explosives, except as authorized by approved SOPs. Flammable liquids will be used in explosive areas only when authorized by approved SOPs. In-use stocks will—

(1) Not exceed one workday's supply;

(2) Be kept in approved safety containers or dispensers; and,

(3) Be removed at the end of each workday.

g. Petroleum, oils, and lubricants (POL) fire separation distances

(1) *POL storage location requirements.* Fire clearance criteria from POL locations are specified by the NFPA Standard 30. If required fire clearances are greater than those required by this regulation, use the greater required separation.

(a) Antisiphon systems will be used where applicable.

(b) Any aboveground petroleum storage tank which has a capacity of 2,000 gallons or more must be enclosed within a dike area as prescribed in 29 Code of Federal Regulation (CFR) 1910.106 and NFPA Standard 30. The capacity of this diked area must equal the capacity of the largest tank within the diked area.

(2) Quantities of 500 gallons or less.

(a) Where tanks serve equipment (such as oil heaters or diesel generators) located in explosives buildings, antisiphoning devices will be used. They are not needed if the level of the tank installation is such that siphoning is impossible.

(b) Above ground petroleum facilities (such as tanks, pumps, or pumphouses) will be located a minimum of 50 feet from explosives locations.

(3) *Parking fuel service trucks.* Parking areas for fuel service trucks will be located a minimum of 50 feet from explosives locations.

(4) *Mobile dispensing units.* There must be at least 100 feet between explosives and any mobile petroleum dispensing unit operating in an explosives area, unless a shorter distance is needed during transfer operations to an underground tank (as allowed under (2) above).

(5) *Liquid petroleum (LP) gas facilities.* LP gas facilities will meet the requirements of this section.

(6) *Vehicle refueling.* Gasoline and diesel-powered vehicles and equipment will not be refueled inside any structure in the explosives storage area or in any facility, site, revetment, or other building containing explosives, regardless of location. When being refueled, vehicles will be at least 100 feet from structures or sites containing explosives. When refueling is completed, the refueling vehicle must be removed promptly from the storage area.

(a) Use the smallest available size refueling unit consistent with the mission.

(b) When refueling explosives-loaded vehicles, maintain an electrically continuous bonding path between the vehicle being filled and the tank being emptied. The entire system will be grounded.

(c) Do not allow smoking or open flame devices within 50 feet of gasoline or diesel refueling. At least one person

must be present during the entire operation. During the refueling, stop the motor of both the vehicle being refueled and the refueling truck (unless the refueling truck motor drives the pump).

(d) If a fuel spill occurs, immediately notify the installation fire department. Do not start the motors of the refueling truck or unit being refueled until the area is rendered safe by the fire department.

(e) Refueling will not be done within 20 feet of a inert ammunition storage building or loading dock.

(7) Exceptions. The following are excepted from the above requirements:

(a) Separation of POL facilities and aircraft during combat or simulated combat operations.

(b) Separation between POL hydrants set on the flight line flush with the pavement and explosives loaded aircraft or explosives loading or unloading operations.

(c) Diesel-powered generators may be equipped with an operational "day-tank" of the smallest size needed to operate the motor properly. Supply tanks will be separated by the applicable underground or aboveground criteria.

h. Paint and other flammable materials. Small stocks of flammable materials, such as paints and solvents required to support explosives maintenance operations, may be stored in an explosives storage area. The 29 CFR 1910.106 and AR 420–90, apply.

(1) Combustible materials, such as wood, paper, and rags, will not be stored with flammables. Containers of flammable materials will be closed, except when in use.

(2) Flammable materials in approved weatherproof containers may stored outdoors. Grounding and bonding are required when contents are being dispensed.

(3) Flammable storage will be located at least 50 feet from explosives locations.

(4) A limited supply of paint, not to exceed a one day requirement, may be stored in explosives operating facilities if the requirements of AR 420–90 are met.

(5) At least one fire extinguisher, suitable for the type of materials involved, will be readily available for use (table 3–1).

i. Vehicle parking. Vehicles, except during loading or unloading, will not be parked closer than 100 feet to any explosives facility.

j. Operating support equipment. The following applies to all support equipment powered by internal combustion engines used with explosives and not otherwise regulated under chapter 10.

(1) This equipment should be located 50 feet or more from explosives but never less than 25 feet.

(2) Only qualified personnel will use the equipment.

(3) The equipment will be inspected for cleanliness and visual defects before each use. Defects will be documented in the applicable forms. Equipment that is malfunctioning or has defects that present a hazard will be removed from the operational site for repairs.

(4) Two fire extinguishers rated 10BC or higher for flammable or combustible liquid fires (Class B fire) and electrical fires (Class C fire) will be readily available.

(5) Equipment will not be refueled within 100 feet of explosives.

k. Stacking combustible material. Containers, dunnage, lumber, and other material will be stacked in an orderly manner. Stacks should be limited to an area of no more than 1,500 square feet. Bulk stacks of combustible materials should not be closer than intraline distance from locations containing explosives (use chap 5 to establish minimum separations). Working quantities may be stacked in the vicinity of explosives. Portable fire extinguishers or water barrels should be provided in these areas.

l. Exceptions on stacking combustible material. When needed to prepare for combat operations, empty containers, dunnage, and lumber which cannot be removed while the work is in progress may be temporarily stacked in or near the explosives storage site, provided—

(1) The stacks are stable and are separated from the operations as far as practical.

(2) All of the materials are removed upon completion of the operation or once each day (24 hours).

3–8. Auxiliary firefighting equipment

a. Fire extinguishers. A minimum of two fire extinguishers suitable for the hazards involved, will be available for immediate use when explosives are being handled. Extinguishers need not be permanently located at the site. Each extinguisher will be placed in a conspicuous and readily accessible location. Each fire extinguisher will be kept in a full, or fully charged, operable condition. Table 3–1 lists agents for fighting fires.

b. Water barrels. Water barrels and pails are suitable for fighting Class A fires. Water barrels will be covered to prevent insect breeding and evaporation. The installation fire chief will decide if they are required and where to put

them at explosives locations. At least two metal pails will be available for each barrel. Water barrels should be winterized as needed. Water barrels may not be needed in an explosives storage area if—

(1) Vegetation control measures are adequate and the area is regularly monitored.

(2) Each crew working in the area has two fire extinguishers readily available. If more than one crew are working at the same location, only two fire extinguishers are required.

(3) The installation has an organized firefighting force able to combat grass and brush fires in a timely manner.

3–9. Storage of water for firefighting

a. Adequate water to fight fires must be available at permanent explosives facilities. The required amount of water will be calculated in accordance with Mil Handbook 1008.

b. The minimum water supply will not be less than 3,000 gallons.

c. The following will be used as guidelines in separating water supplies from explosives:

(1) Water tanks shall be separated from explosives per chapter 5.

(2) Sectional control valves will protect the water distribution system so that damaged sections of the main can be cut off without impairing the operation of the remainder of the system. Water mains will not be located under railroads or roads used for conveying large quantities of ammunition or explosives, as a detonation may cause a main to break.

3–10. Access to fire hose

The fire chief may choose to have a standard hose prepositioned and connected to fire hydrants. Hose and accessories will be protected from deterioration by approved hose houses and other protection as determined by the fire chief.

3–11. Limitation of fire areas

Openings in fire walls will be provided with approved automatic fire doors. They will be installed and maintained per NFPA Standard 80.

3–12. Reciprocal agreements for fire fighting support

Mutual aid agreements will be established where civilian fire departments support major firefighting efforts or when the host nation provides fire protection.

a. The Army fire department will provide adapters if there is any difference in the thread size of equipment connections the cooperating departments use.

b. The Army fire department will give familiarization training to senior fire officials of cooperating departments for the special firefighting problems in the territory served by their departments. This will ensure better integration of their forces in an emergency.

c. Non-Department of Defense (DOD) firefighters who support Army units will not be used to fight fire involving chemicals or explosives. These firefighters will be informed during training of the hazards of a fire involving chemicals or explosives. A mutual aid agreement according to AR 420–90 will specify the base agency which will provide this training.

3–13. Public withdrawal distances

a. Emergency withdrawal distances for nonessential personnel are intended to apply in emergency situations only and are not to be used for facility siting. Emergency withdrawal distances depend on fire involvement and on whether or not the hazard classification, fire division, and quantity of explosives are known. The withdrawal distance for essential personnel at accidents shall be determined by emergency authorities on site. Emergency authorities shall determine who are essential personnel.

b. If a fire involves explosives or involvement is imminent, then the initial withdrawal distance applied will be at least inhabited building distance. When emergency authorities determine that the fire is or may become uncontrollable and may result in deflagration and/or detonation of nearby ammunition or explosive material, all nonessential personnel will be withdrawn to the appropriate emergency withdrawal distance listed in table 3–4. If fire is not affecting explosives or involvement is not imminent, then emergency authorities shall determine the withdrawal distance based on the situation at hand.

c. Structures or protected locations offering equivalent protection for the distances listed in table 3–4 may be used instead of relocating personnel from the structure and/or location to the specified emergency withdrawal distance.

d. Commanders will develop evacuation plans for their installations that reference the appropriate withdrawal distances as part of the disaster response plan. The commander must alert civilian authorities of any explosive accident on the installation that may affect the local community and provide these authorities with the appropriate emergency withdrawal distances.

3–14. Firefighting guidance symbols

There are two types of symbols which give guidance for firefighting forces and other personnel, fire and chemical hazard symbols.

a. Fire divisions. There are six explosives divisions. Fire division 1 indicates the greatest hazard. The hazard decreases as the fire division numbers increase, as shown in table 3–5.

b. Fire division symbols.

(1) Each of the six fire divisions is indicated by one of four distinctive symbols recognizable to the firefighting personnel approaching the fire scene. The applicable fire division number is shown on each symbol. For easy identification from long range, the symbols differ in shape as shown in table 3–6. (Also, see figs 3–1 through 3–4.)

(2) The hazard and firefighting precautions for each symbol are summarized in table 3–3.

c. Chemical hazard symbols. These symbols are used to identify operating buildings and storage facilities which contain pyrotechnic and chemical munitions or agents and other hazardous material.

(1) Hazard symbols vary with the type of agent. These symbols are described in figures 3–5 through 3–7.

(2) The hazard each symbol represents and the firefighting precautions are summarized in table 3–3.

(3) The APPLY NO WATER sign is intended for use with hazardous materials where use of water may intensify the fire, cause an explosion, or spread the fire.

(4) The chemical agents most used in ammunition and the combinations of chemical hazard symbols required in storage are specified in table 3–7.

d. Posting symbols. Symbols will be removed, covered, or reversed if the explosives or chemical agents are removed from a facility or location. The person in charge of the operation will post or change the symbols. The fire department will be notified each time fire or hazard symbols are changed.

e. Symbol dimensions. The dimensions shown in figures 3–1 through 3–7 are the normal minimum sizes. Half-size symbols may be used where appropriate, for example, on doors and lockers inside buildings.

f. Obtaining symbol decals. Decals for fire and chemical hazard symbols may be obtained through normal supply channels. National stock numbers of standard and half-size decals are listed in figures 3–1 through 3–7.

g. Storing toxic chemical and ammunition items. Toxic chemicals without explosive components may be received as Class 6, Division 1 poisons (6.1). Items which contain chemical substances of another commodity class and which do not contain explosive components, may be stored with ammunition items containing explosives and the same chemical substance.

3–15. Posting fire symbols

The fire symbol that applies to the most hazardous material present will be posted on or near all nonnuclear explosives locations. It will be visible from all approach roads. One symbol posted on or near the door end of an earth-covered magazine is normally enough. One or more symbols may be needed on other buildings. When all munitions within a storage area are covered by one fire symbol, it may be posted at the entry control point. Backing material for fire symbol decals should be the shape of the decal and should be noncombustible.

a. When different HDs of explosives are stored in individual multi-cubicle bays or module cells, they may be further identified by posting the proper fire symbol on each bay or cell.

b. Where facilities containing explosives are located in a row on one service road and require the same fire symbol, only one fire symbol at the entrance of the row is required.

c. Fire symbols will be placed on entrances to arms rooms containing ammunition. Where explosives are stored in a locker or similar container, the container will also be marked with the appropriate fire symbol. Symbols are not required on the exterior of the building, providing the building is exempt from Q-D according to paragraph 5–1b.

3–16. Exceptions on posting fire symbols

a. Fire symbols need not be posted on locations having 1,000 rounds or less of HD 1.4 small arms ammunition (.50 caliber or less).

b. Use the symbols in this regulation unless host nation symbols differ and, by agreement, host nation symbols are required.

c. The responsible commander may, for security purposes, remove symbols. In such situations the commander will emphasize giving prompt and exact information to the fire department about changes in the status of explosives.

d. Fire symbols are not required on individual structures used to store, maintain, or handle nuclear weapons or

components. However, fire symbols are required to mark individual structures used to store, maintain, or handle conventional ammunition. The following procedures will be used in these situations:

(1) Maintain a storage area facility map or listing as applicable showing the proper TM 39–20–11 line number for nuclear weapons and components.

(a) Provide the information on this map or listing to the fire department and update it as changes occur.

(b) The entry controller will keep a map or listing similar to the one in (1) above. This information will be given to firefighters responding to an emergency.

(2) If explosives are stored overnight in the maintenance and assembly building, advise the entry controller (when required) and fire department of the TM 39–20–11 line number for the building.

e. If vehicles or aircraft are in a designated explosives parking area, fire symbols need not be posted if such areas are described in a local publication, such as the vehicles and aircraft parking plan, which includes the following:

(1) The HD involved.

(2) The governing fire symbol for the parking area.

(3) Procedures to be followed during an emergency.

(4) The requirement to notify the fire department.

f. Do not post fire symbols near vehicle or aircraft loaded with nuclear weapons. Do not post fire symbols near vehicles loaded with nonnuclear munitions parked within the same designated area as nuclear weapons-loaded vehicles or aircraft. In these cases, use the procedures described in e above.

3–17. Posting chemical hazard symbols

If chemical or pyrotechnic munitions are assembled with explosive components, then chemical hazard symbols must be used together with fire division symbols. Chemical munitions which do not have explosive components will be identified by the chemical hazard symbol only. Requirements for posting hazard symbols are the same as for fire symbols.

3–18. Procedures for chemical agents and other toxic substances

These procedures vary according to the type of agent involved and are summarized in table 3–3.

3–19. Firefighting at railheads

a. Fires are most likely to occur in the under-structure of railcars. Often they can be extinguished if found in the early stages. Every effort should be made to separate and promptly remove undamaged cars from yards where a fire has broken out.

b. Where explosives operations are conducted at railheads, Government railroad personnel should be trained to use fire equipment.

3–20. Automatic sprinkler systems

a. Properly installed and maintained automatic sprinkler protection is important in reducing fire losses and is justified in certain buildings. In addition to requirements of the National Fire Codes, published by the NFPA, the following are examples of locations where sprinklers will be installed when required by AR 420–90:

(1) In certain buildings, in load lines, explosives manufacturing, receiving, shipping, inspection, ammunition workshop, and demilitarization areas after a risk assessment.

(2) Where a potential loss of life exists.

(3) When value of buildings and/or contents warrants.

b. Automatic sprinkler systems will not be deactivated unless repairs or modification to the system are required. When interruption is required or deactivation of a system is necessary, the criteria and precautions outlined in TM 5–695 will be followed. Where heating is a problem, wet systems should be converted to automatic dry systems. Valve rooms will be heated during the winter.

c. Inspection and maintenance of automatic sprinkler systems will conform with requirements of TM 5–695.

d. Local water flow alarm facilities are required for automatic sprinkler systems installed in explosives operating buildings; however, transmitted waterflow alarms may not be required.

3–21. Deluge systems for explosives operations

a. In addition to sprinklers, deluge systems will be provided to protect operating personnel in high hazard occupations and locations where a process fire hazard exists. An ultra high speed deluge system will be considered when the following conditions exist—

(1) A risk assessment indicates that an accidental deflagration or explosion is unacceptable.

(2) An area or operation will expose personnel to thermal flux in excess of 0.3 calories per square centimeter per second if an accidental deflagration or explosion should occur.

(3) The system must be capable of preventing propagation between bays and preventing significant injury to employees. Quick-acting sensors such as ultraviolet (UV) or infrared (IR) detectors will be used. The MACOM may

approve using new technology which offers comparable or better protection than UV or IR detectors. The deluge valve will be arranged for automatic and/or manual activation.

b. An ultra high speed deluge system is an instantaneous response (milliseconds) system. It is used primarily to protect personnel, process equipment, and buildings from the fire and thermal hazard presented by energetic material involved in high hazard explosive operations, such as, melting, mixing, blending, screening, sawing, granulating, drying, pressing, extrusion, and pouring. Deluge systems with heat actuated devices (HAD) are not ultra high speed deluge systems and will not be used for personnel protection.

c. Due to the speed of water coming from all the nozzles, ultra high speed deluge systems depend on the detection system, piping network, nozzles and water supply characteristics. Only experienced designers, engineers, and installers who understand the system's limitations and capabilities should provide the design, specification, and installation of the deluge system.

d. All munitions production, maintenance, renovation, quality assurance and demilitarization operations will receive a risk assessment to identify potential fire and thermal threats and to assess the level of risk. The hazard must be accurately defined. A potential fire and or thermal hazard whose level of risk is high or extremely high is unacceptable. The risk assessment will consider factors such as:

(1) Initiation sensitivity
(2) Quantity of material
(3) Heat output
(4) Burning rate
(5) Potential ignition and initiation sources
(6) Protection capabilities
(7) Personnel exposure
(8) Munitions configuration
(9) Process equipment
(10) Process layout
(11) The building layout.

e. The diameter, length, number of bends, and friction coefficient limits the effective flow rate of the water that the system can transport at an effective pressure. Pipe runs will be kept to a minimum. Horizontal runs will be sloped at least 1/4 inch per 10 feet of run, with air bleeders at all high points. The looping of deluge piping systems may improve response time by improving pressure and effective flow rate.

f. The design of the nozzle orifice determines the dispersion pattern, water droplets, and turbulence of the water flow which in turn, directly affects the water velocity. Nozzles will be installed with priming water being held back at the nozzle with blowoff caps, rupture disc, or the poppet valve when utilizing pilot operated nozzles. Nozzle discharge rates and spray patterns will be selected to meet the hazard condition being protected.

g. The nozzles will be located as close to the exposed surface of the explosives as possible to ensure immediate drenching of all parts of the machine or operation under extreme conditions. The discharge pattern of the nozzle can be used in determining the required distance. When explosives are located inside machines under tight hoods or covers, distributing outlets will be located inside the enclosed space.

h. Where explosive vapors, gases, or dusts may enter outlets and interfere with their operation, nonmetallic internally spring- held caps will be placed on the outlets. The design must provide immediate release of the cap when pressure is exerted within the outlet. Caps will be attached to outlets with small nonferrous chains to prevent their loss when the deluge system is activated.

i. Install a device on the supply side of the system so that the system will actuate an audible warning device in affected operating areas when the pressure falls.

j. Deluge systems will be charged with water or chemicals. This depends on the character of the fire to be controlled, as determined by engineering studies of the hazards and the hazard analysis.

k. Operations protected by a deluge system will be stopped immediately if the system fails and will not be resumed without adequate protection.

l. An estimate of the required maximum flow rate and pressure will be made. The capabilities of the existing water supply and distribution system to meet these requirements will be evaluated. If the required flow rate and pressure is not adequate, arrangements must be made to provide the required flow and pressure. The water pressure necessary for proper functioning of a deluge system must be available instantaneously. The water supply will have a duration of at least 15 minutes. If there are two or more deluge systems in the same fire area, supply mains and the arrangements and size of the system rise will provide each system with the required quantities of water per head. No allowance is required for hose lines. All valve on water lines between the water main and the deluge systems will be supervised to ensure the valves are not accidently closed.

m. The deluge valve will be arranged for automatic or manual activation or both. Manual activation devices will, as a minimum, be located at exits.

n. The deluge system must able to prevent fire spreading from one cell or bay to another. Together with personal

protective equipment required for workers at the operation, the deluge system will prevent significant injury to the worker. The workers will not receive more than first-degree burns from any thermal threat. The effectiveness of the deluge system will be demonstrated by test against actual or equivalent threat. These tests will be conducted with the maximum quantity of energetic material expected to be in the cell or bay. Testing is unnecessary if a small deluge (design flow of 500 gallons per minute or less) has a response time of 100 milliseconds. Testing is unnecessary for a large deluge system (design flow of more than 500 gallons per minute) with a response time of 200 milliseconds or less, provided a hazard analysis indicates that a faster response time is not required. For the life of the system, the installation will retain on file the results of the tests or the use of the 100 or 200 milliseconds or less response time.

o. Response time is the time in milliseconds from the presentation of an energy source to the detection system, to the beginning of water flow from the critical nozzle under test. The critical nozzle is usually located closest to the hazard or as a hazard analysis determines best.

p. Two methods are commonly used to measure response time—

(1) A millisecond digital time is started by saturated UV source (IR for IR detectors) held directly in front of the detector and is stopped by the actuation of a water flow switch at the critical nozzle. This method does not measure the time lag of and water travel time from the nozzle to the target. It is normally used for routine testing.

(2) A high-speed video camera and recorder (at least 120 frames per second) can be used for very accurate measurement. The time from ignition to detection and water travel time from nozzle to target can also be measured. The video recording system can be used for contract compliance or when measurement of total response time is required.

q. Deluge systems will be tested and maintained per the criteria of TM 5–695 and this pamphlet. A good preventive maintenance program is required to reduce the number of false alarms and other system problems. Systems in laid-away or inactive facilities are exempt from testing. Laid-away systems will be tested when they are put back into service. Records of tests will be kept on file at the installation. The following tests will be conducted—

(1) A full operational flow test will be conducted at intervals not to exceed 1 year, including measurement of response time. The installation will retain the results of tests on file for the life of the system.

(2) Detectors will be tested and inspected for physical damage and accumulation of deposits on the lenses at least monthly.

(3) Controllers will be checked at the start of each shift for any faults.

(4) Valves on the water supply line shall be checked at the start of each shift to ensure that they are open. Checking is unnecessary if the valve is secured in the "open" position with a locking device or is monitored by a signaling device that will sound a trouble signal at the deluge system control panel or other central location.

r. The melt kettle and closed containers of molten explosive will normally not be equipped with internal flame detectors or deluge nozzles. The exterior of the kettles and closed containers will be protected by ultra-high-speed deluge systems. This is especially important for container or kettle openings where materials are placed.

s. A portable deluge may be used in lieu of a permanently installed deluge system provided it meets the following—

(1) A portable ultra-high-speed deluge system may be used to protect short-run ammunition operations involving production, maintenance, renovation, demilitarization, and surveillance. It is not a permanent solution for long-term runs or high usage locations.

(2) The portable deluge systems, as a minimum, will consist of—

(a) Two detectors,

(b) Two nozzles,

(c) A pressurized tank with at least 100 gallons of water.

(3) The portable deluge system must be tested and timed each time it is set up for each new operation. This time must not exceed 100 milliseconds as outlined above.

(4) The portable deluge system must be located so that no personnel are working directly opposite it.

(5) The portable deluge system should be tied into a backup water supply. It will also set off the building fire alarm.

t. The required density will depend upon the type of energetic material involved, process layout, and whether the aim is to extinguish the fire, prevent its propagation, or prevent serious injury, or a combination of these. A commonly used density for preventing propagation and structural damage is 0.5 GPM/SQ FT. To protect personnel and process equipment or extinguish pyrotechnic materials, significantly higher density rates may be necessary. These may be as high as 3.0 GPM/SQ FT for area coverage or 200 GPM for point-of-operation coverage.

3–22. Instructions for fighting fires involving ammunition or explosives

a. When a guard, watchman, or other person discovers smoke coming from a closed magazine, or sees any evidence that a magazine is afire, he or she will give the alarm as quickly as possible and evacuate to a safe distance. He or she will not enter a burning building or magazine, nor open the building or magazine door if a fire is suspected.

b. If a fire is discovered in grass or other combustible material surrounding a magazine, the alarm should be given immediately and the guard should do all that is possible, using available firefighting tools to extinguish or control the fire until firefighting forces arrive. It is important to extinguish grass fires especially when they are close to magazines.

If a fire has actually started inside a magazine, firefighting forces should either combat the fire or seek the nearest suitable protection, depending on the type of ammunition or explosives with the magazine.

c. When a workman or other person discovers a fire in a building where people are working and explosives are present, a suitable fire signal will be given and all personnel present will be evacuted. At least one responsible manager will be dispatched in the direction from which the fire department is expected to come, to inform firemen of the location, nature, and extent of the fire. The officer in charge of firefights will not permit personnel to advance until accruate information is available about the existing hazard and an dconcludes that the advance is justified.

3–23. Reentry of underground facilities

Entry to underground storage facilities following a fire or explosion requires special precautions. Monitoring for the presence of toxic fumes, oxygen depleted atmospheres and structural damage shall be performed during initial entry following an accident. Commanders will develop written procedures that define actions to be taken in such emergency situations.

3–24. Emergency planning

Installations or responsible activities will develop Standing Operating Procedures (SOPs) or plans designed to provide safety, security, and environmental protection. Plans will be coordinated with the appropriate Federal, state, and local emergency response authorities (e.g., law enforcement, fire departments, and hospitals) and any established Local Emergency Planning Committees (LEPCs). At a minimum, these SOPs or plans shall include:

a. Specific sections and guidance that address emergency preparedness, contingency planning, and security. With respect to security, these SOPs or plans will include provisions that limit access to trained and authorized personnel.

b. Procedures that minimize the possibility of an unpermitted or uncontrolled detonation, release, discharge, or migration of military munitions or explosives out of any storage unit when such release, discharge, or migration may endanger human health or the environment.

c. Provisions for prompt notification to emergency response and environmental agencies and the potentially affected public in the event of an actual or potential detonation or uncontrolled release, discharge, or migration that may endanger human health or the environment.

d. Provisions for complying with the Emergency Planning Community Right-To-Know Act (EPCRA), Section 302–312 and DOD or DA implementing policies.

Table 3–1
Extinguishing agents for fires

Type of Fire	Extinguishing Agent
Class A - Combustible (materials such as wood, paper, rubbish, or grass)	Water
Class B - Volatile flammables (materials such as oil, gasoline grease, or paint)	Carbon dioxide, halon, foam, or dry chemical
Class C - Electrical (electrical equipment)	Carbon dioxide, halon, or dry chemical
Class D - Combustible metals (magnesium, potassium, and so forth)	Dry powder

Notes:
[1] This is general guidance. For more specific guidance, see MSDS, NFPA publications, or consult a fire protection specialist.

Table 3–2
Fire symbol hazards and actions

Fire symbol	Materials	Hazard	Action/remarks
1	1.1 explosives, ammunition, and liquid propellants	Mass detonation	1. Will not be fought unless a rescue attempt is being made. 2. If there is suitable separation between nonexplosive and symbol 1 materials, and if approved by the fire chief, fire fighting forces may attempt to extinguish the fire. 3. If personal safety is in doubt, take suitable cover.

Table 3–2
Fire symbol hazards and actions—Continued

Fire symbol	Materials	Hazard	Action/remarks
2	1.2 ammunition and explosives	Explosion with fragments	1. Give the alarm and attempt to extinguish the fire if in an early stage. 2. Firefighting forces should fight the fire, until the explosive material becomes involved in the fire or the fire chief determines the risk is too great. If not possible, prevent the spreading of the fire. 3. Detonations of items could occur. Provide protection from fragments.
3	1.3 ammunition and explosives	Mass fire	1. May be fought if explosives not directly involved. 2. If WP munitions are involved, smoke is liberated. WP munitions may explode. WP should be immersed in water or sprayed with water continuously. 3. For fire involving HC and incendiaries, water should not be used unless large quantities are available. Use dry and/or dry powder agent in the early stage. 4. For fires involving pyrotechnics and magnesium incendiaries, protect adjacent facilities and equipment. Do not use CO_2 or halon extinguishers or water on or near the munitions. Allow magnesium to cool unless upon flammable material. In this case, use a 2-inch layer of dry sand or powder on the floor and rake the burning material onto this layer and resmother.
4	1.4 ammunition and explosives	Moderate fire	1.Fight these fires. 2. Expect minor explosions and hot fragments.

Table 3–3
Chemical hazard symbols and actions

Chemical symbol	Materials (SCG)	Hazard	Action/Remarks
Full protective clothing—set 1 (Red)	Nerve or blister agents (K)	Highly toxic as aerosol/vapor	1. Evacuate public 2 miles downwind or 1 mile upwind or to the sides. These are initial evacuation distances which can and should be modified using an approved evacuation plot program. 2. Use munitions decontamination procedures. 3. If explosion does not occur, approach from upwind and extinguish fire.
Full protective clothing—set 2 (Yellow)	Riot control/smokes (G) Incapacitating agents (K)	Toxic as aerosol/vapor	1. Approach from upwind and extinguish fire. 2. Decontamination may be required.
Full protective clothing—set 3 (white)	TEA smoke (L)	Spontaneously flammable when exposed to air	1. Do no look at burning material. 2. Do not use water.
	White Phosphorous (H), Red Phosphorous	Spontaneously flammable when exposed to air	1. Post fire guard until leaking phosphorus has been removed. 2. After removal of agents, post fire guard for 2 days for possible reignition. 3. Use putty knife to remove small amounts, then use blowtorch to burn off remainder.
Wear breathing apparatus	HC smoke (G)	Smoke	Do not use water.
	Incendiary (G)	Burns with extremely high temperatures	1. Do not use water. 2. Do not look at burning material.

Table 3–3
Chemical hazard symbols and actions—Continued

Chemical symbol	Materials (SCG)	Hazard	Action/Remarks
	Napalm (J)	Mass fire	Fight as a POL fire.
Apply no water	HC smoke (G)	Smoke	Do not use water.
	Incendiary (G)	Burns with extremely high temperature	1. Do not use water. 2. Do not look at burning material.
	TEA smoke (L)	Spontaneously combustible	1. Do not use water. 2. Do not look at burning material.

Table 3–4
Emergency withdrawal distances for nonessential personnel

Hazard Class/Division	Unknown quantity NEW	Known quantity NEW
Unknown facility, truck and/or tractor trailer	4000 feet (approximately .75 mile)	4000 feet (approximately .75 mile)
Unknown railcar	5000 feet (approximately 1 mile)	5000 feet (approximately 1 mile)
HC/D 1.1 (see note 1)	Same as unknown HC/D	For transportation: (a) Use 2500 feet minimum distance for 500 lbs NEW and below. (b) Use 5000 feet minimum distance for railcars above 500 lbs, (c) Otherwise use 4,000 feet minimum distance. (d) Use 4000 feet minimum distance for bombs and projectiles with caliber 5 inch (127mm) and greater. For facilities: (a) Use 2500 feet minimum distance for 15000 lbs and below. (b) Use 4000 feet minimum distance for above 15000 lbs and less than 50,000 lbs. (c) Above 50,000 lbs, use $D = 105W^{1/3}$.
HC/D 1.2 (See note 1.)	2500 feet	2500 feet
HC/D 1.3 (See note 2.)	600 feet	Twice the IBD distance with a 600 feet minimum distance.
HC/D 1.4	300 feet	300 feet

Notes:

[1] For HC/D 1.1 and 1.2 items, if known, the maximum range fragments and debris will be thrown (including the interaction effects of stacks of items, but excluding lugs, strongbacks, and/or nose and tail plates) may be used to replace the minimum range shown above.

[2] For accidents involving propulsion units, it is unnecessary to specify emergency withdrawal distances based upon the potential flight ranges of these items.

Table 3–5
Fire divisions hazards

Fire division	Hazard involved
1	Mass detonation
2	Explosion with fragments
3	Mass fire
4	Moderate fire

Table 3–6
Fire division symbols

Fire symbol	Shape	National Stock Number
1	Octagon	7690-01-082-0290 7690-01-081-9581
2	X	7690-01-082-0289 7690-01-087-7340
3	Inverted triangle	7690-01-081-9583 7690-01-081-9582
4	Diamond	7690-01-082-6709 7690-01-081-9584

Table 3–7
Chemical agents and fillers contained in ammunition and the chemical hazard symbols required in storage

Chemical agents and fillers	Full protective clothing			Breathing apparatus	Apply no water	G	VX	BZ	H	L
	Set 1	Set 2	Set 3							
GB	X					X				
VX	X						X			
H, HD, HT	X								X	
L	X									X
CL, CG, CK, CN, CNS, CS, BBC, DA, DC, DM, FS, FM			X							
HC				X	X					
BZ		X						X		
WP, PWP, RP			X							
TH, PT				X	X					
IM, NP				X						
TEA, TPA			X		X					
Colored smokes				X						

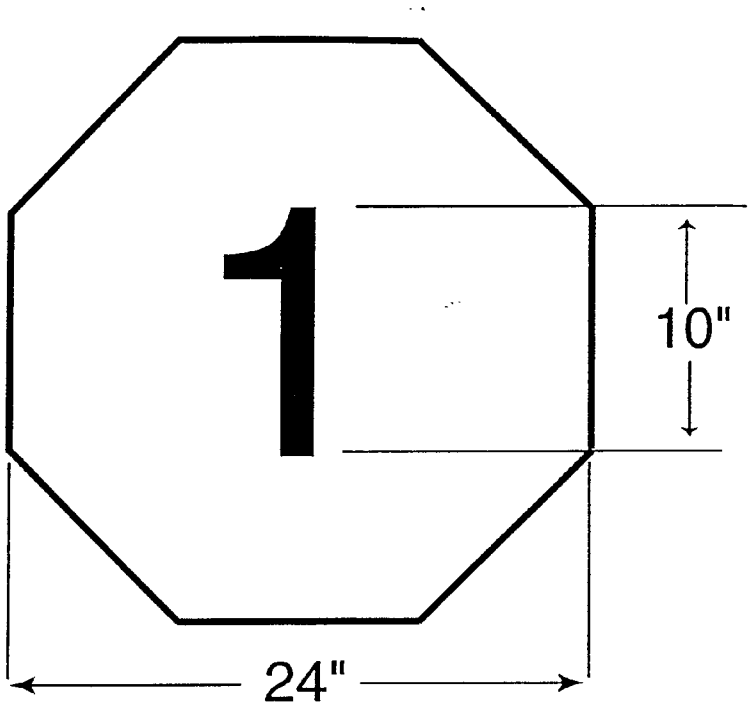

FIRE SYMBOL 1.

Decals: NSN 7690-01-082-0290 (Large)
NSN 7690-01-081-9581 (Small)

Color of Symbols: Orange
Numbers: Black 10" High and 2" Thick
Note: Small symbols may be used where appropriate. See para. 3-14e

Figure 3-1. Fire symbol 1 — mass detonation

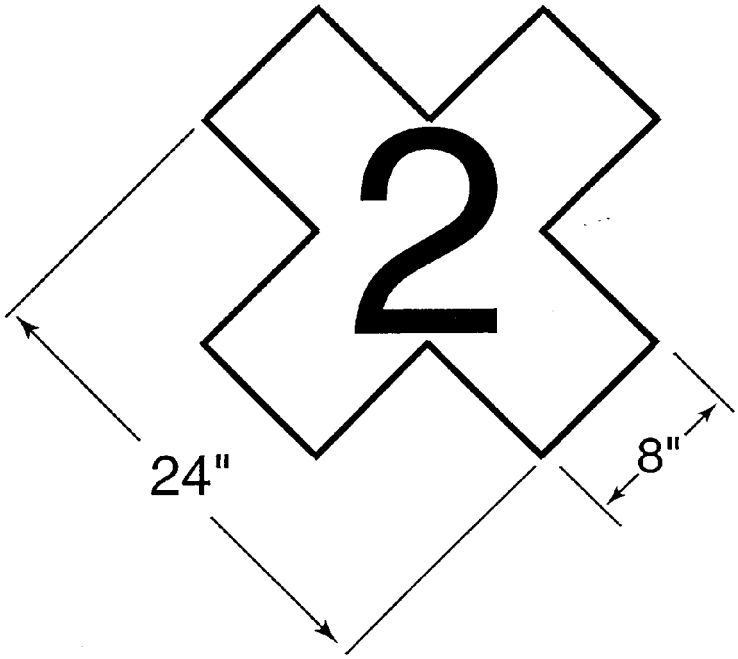

FIRE SYMBOL 2.

Decals: NSN 7690-01-082-0289 (Large)
NSN 7690-01-087-7340 (Small)

Color of Symbols: Orange
Numbers: Black 10" High and 2" Thick
Note: Small symbols may be used where appropriate. See para. 3-14e

Figure 3-2. Fire symbol 2 — explosion with fragments

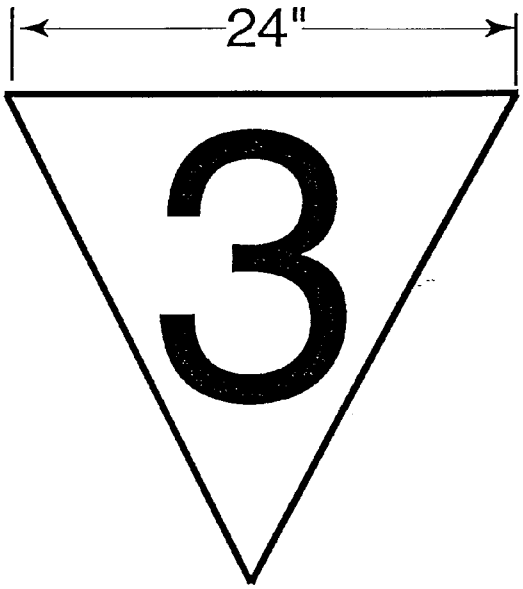

FIRE SYMBOL 3.

Decals: NSN 7690-01-081-9583 (Large)
NSN 7690-01-081-9582 (Small)

Color of Symbols: Orange
Numbers: Black 10" High and 2" Thick
Note: Small symbols may be used where appropriate. See para. 3-14e

Figure 3-3. Fire symbol 3 — mass fire

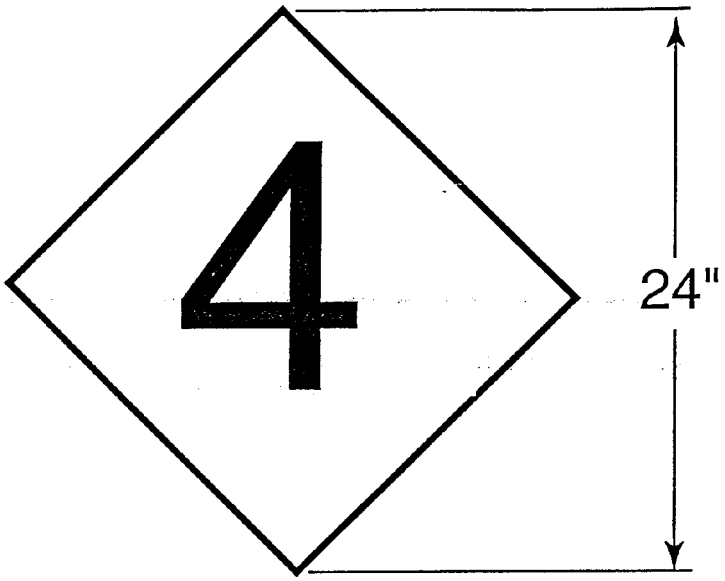

FIRE SYMBOL 4.

Decals: NSN 7690-01-082-6709 (Large)
NSN 7690-01-081-9584 (Small)

Color of Symbols: Orange
Numbers: Black 10" High and 2" Thick
Note: Small symbols may be used where appropriate. See para. 3-14e

Figure 3-4. Fire symbol 4 — moderate fire

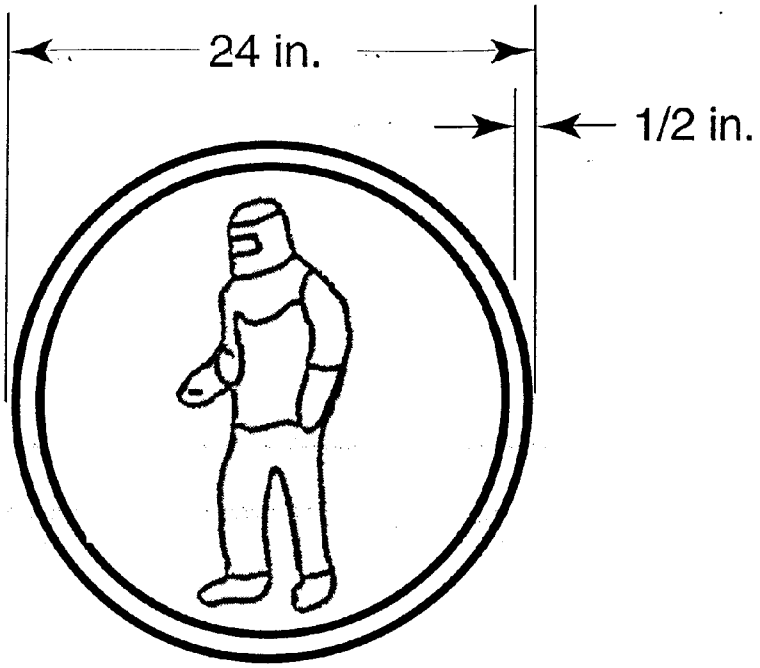

Symbol 1.

Wear full protective clothing

Color*:
Background is blue.
Figure and rim is:
- Red for set 1 protective clothing.
24" NSN 7690-01-081-9586 12" NSN 7690-01-081-9585
- Yellow for set 2 protective clothing.
24" NSN 7690-01-081-9587 12" NSN 7690-01-082-0291
- White for set 3 protective clothing.
24" NSN 7690-01-083-6272 12" NSN 7690-01-081-9588

*Note:
Colors per FED STD 595 A
or GSA catalog:
Red no. 11105
Blue no. 15102
Yellow no. 13538
White no. 17875

Figure 3-5. Chemical hazard symbol 1

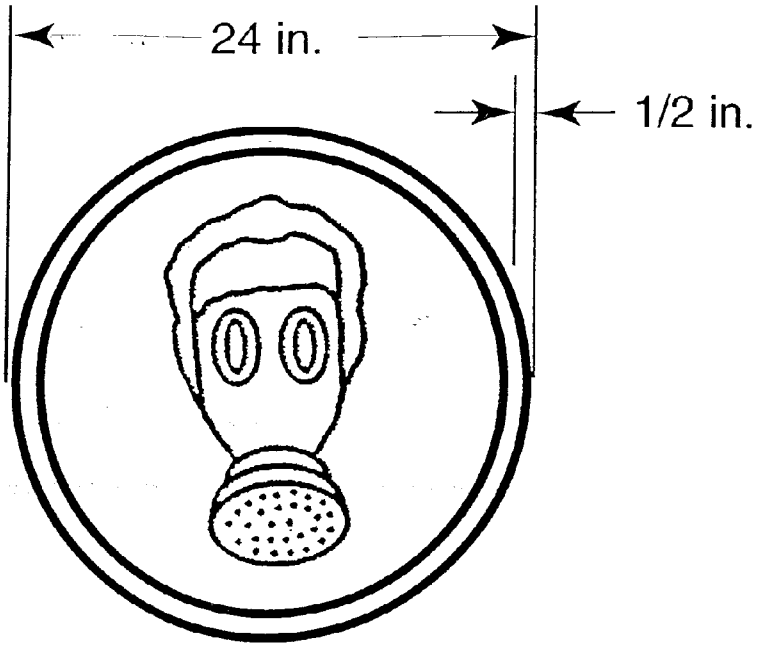

Symbol 2.

Wear Breathing Apparatus

Color*:
Background is blue.
Figure and rim are white.
24" NSN 7690-01-081-9589 12" NSN 7690-01-082-6710

*Note:
Colors per FED STD 595 A
or GSA catalog:
Blue no. 15102
White no. 17875

Figure 3-6. Chemical hazard symbol 2

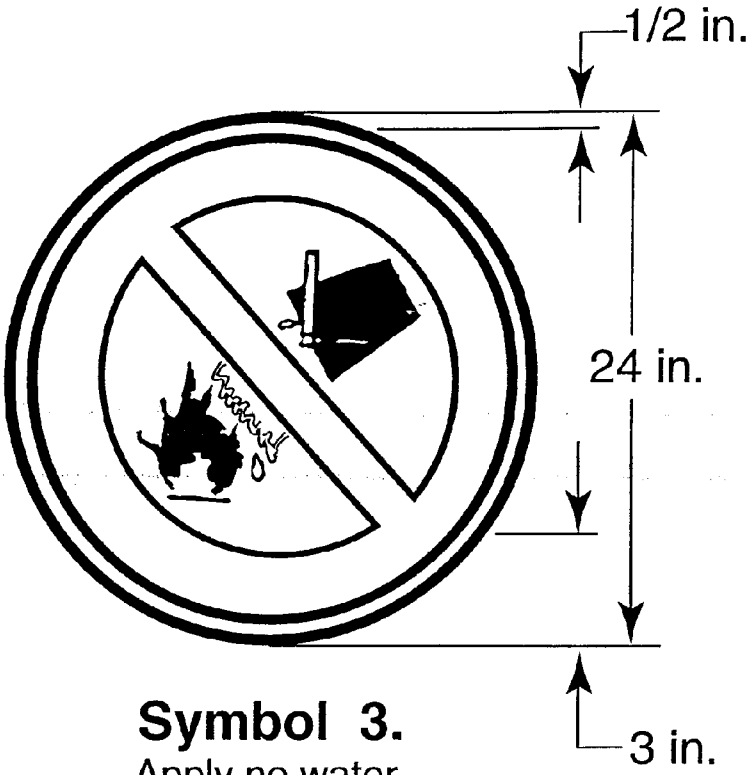

Symbol 3.
Apply no water

Color*:
Background is white
Circle and diagonal are red
Figures are black
24" NSN 7690-01-082-2254 12" NSN 7690-01-082-0292

*Note:
Colors per FED STD 595 A
or GSA catalog:
Red no. 11105
White no. 17875
Black no. 17038

Figure 3-7. Chemical hazard symbol 3

Chapter 4
Hazard Classification and Compatibility Groups

4–1. Explosives hazard classification procedures

a. To make identifying hazard characteristics easier and thus promote safe storage and transport of ammunition and explosives, DOD uses the international system of classification devised by the United Nations (UN) for transport of dangerous goods. Ammunition and explosives are also assigned DOT class and marking in accordance with 49 CFR 173.

b. The U.S. Army Technical Center for Explosive Safety (USATCES) assigns proper hazard classifications. Inquiries for information about existing munitions or required data regarding newly developed systems will be addressed to U.S. Army Technical Center for Explosives Safety.

c. The UN classification system consists of nine hazard classes, two of which contain most ammunition and explosives as defined in this publication (Classes 1 and 6).

(1) Ammunition is now being classified by predominant hazard. This means that if an ammunition item contains something which presents a greater hazard in transportation than the hazard class 1 material, it will be placed in that hazard class. For example, if a rocket motor contains a quantity of fuel and a small igniter, then the proper hazard class may be class 3, rather than HD 1.3.

(2) A complete revision of the criteria applicable to HD 1.2 has been approved by the Department of Defense Explosives Safety Board (DDESB). These new standards must be fully implemented by 1 October 2003, but their immediate use is authorized and encouraged to avoid a need to resite explosive facilities when their use becomes mandatory. The revised criteria are contained in appendix I.

d. Class 1 is divided into divisions that indicate the character and predominance of associated hazards:

(1) Mass detonating (Division 1)

(2) Nonmass-detonating fragment producing (Division 2)

(3) Mass fire (Division 3)

(4) Moderate fire - no blast (Division 4)

(5) Extremely insensitive detonating substances (EIDS) (Division 5)

(6) Extremely insensitive ammunition (Division 6).

e. For further refinement of this hazard identification system, a numerical figure (in parentheses) is used to indicate the minimum separation distance (in hundreds of feet) for protection from debris, fragments, and firebrands when distance alone is relied on for such protection. This number is placed to the left of the HD designators 1.1 through 1.3, such as (18)1.1, (08)1.2, and (06)1.3 (see para 5–5 for more information). When determining distance requirements for items hazard classified as HD 1.2.1, 1.2.2 or 1.2.3 under the revised HD 1.2 criteria, such fragment distance designation is not applicable. See appendix I for revised HD 1.2 siting criteria.

f. Articles that contain riot control substances without explosives components are classified as Class 6, Division 1, in the U.N. Recommendations for Transport of Dangerous Goods. Bulk lethal chemical agents and munitions without explosives are HD 6.1 in the U.N. recommendations.

g. Technical Bulletin (TB) 700–2 is used to assign an HD to all ammunition and explosives except those that are candidates for designation as EIDS and EIDS ammunition. The EIDS and EIDS ammunition shall be assigned to HD as indicated in table 4–1 with prior Department of Defense Explosives Safety Board (DDESB) approval.

h. Final hazard classifications for ammunition and explosives are listed in the Joint Hazard Classification System (JHCS). The JHCS is the DOD authority for hazard classifications. The JHCS is available through File Transfer Protocol (FTP), on-line as the Joint Hazard Automated Retrieval System (JHARS), microfiche, or printout. Requests for copies of the JHCS shall be addressed to U.S. Army Technical Center for Explosives Safety. DOD contractors have to submit their requests through their Contracting Officer's Representative (COR) who will validate the contractor's need.

4–2. EIDS and EIDS ammunition

a. EIDS is comprised of substances which have a mass explosion hazard but are so insensitive that there is very little probability of initiation or of transistion from burning to detonation under normal conditions of transport. These materials are assigned to HD 1.5 for transportation purposes only. For storage, these materials are assigned to HD 1.1 (see para 5–2 also).

b. The EIDS ammunition consists of extremely insensitive articles which do not have a mass explosive hazard. The

articles contain only EIDS and demonstrate (through test results) a negligible probability of accidental initiation or propagation. These materials are assigned HD 1.6.

c. Quantity-distance application:

(1) Quantity-distance separations for HD 1.6 ammunition and explosives will be based on table 5–18. This information is detailed in table 4–2.

(2) Inhabited building distance (IBD) for bulk HD 1.6 explosives will be based on chapter 5.

4–3. Storage principles

a. The highest degree of safety in ammunition and explosives storage could be assured if each item were stored separately. However, such ideal storage generally is not feasible. A proper balance of safety and other factors frequently requires mixing of several types of ammunition and explosives in storage.

b. Ammunition and explosives may not be stored together with dissimilar materials or items that present additional hazards. Examples are mixed storage of ammunition and explosives with flammable or combustible materials, acids, or corrosives.

c. All ammunition and explosives items are assigned to one of 13 storage compatibility groups (SCGs), based on the similarity of characteristics, properties, and accident effects potential. Items in each individual SCG can be stored together without increasing significantly either the probability of an accident or, for a given quantity, the magnitude of the effects of such an accident. Considerations used in assigning SCGs include but are not limited to the following:

(1) Chemical and physical properties.

(2) Design characteristics.

(3) Inner and outer packing configurations.

(4) Quantity-distance division.

(5) Net explosive weight.

(6) Rate of deterioration.

(7) Sensitivity to initiation.

(8) Effects of deflagration, explosion, or detonation.

d. When such mixed storage will facilitate safe operations and promote overall storage efficiency, ammunition and explosives may be mixed in storage, provided they are compatible. Assignment of items of SCGs requiring separate storage will be minimized consistent with actual hazards presented and not based on administrative considerations or end use.

e. Ammunition and explosives in substandard or damaged packaging, in a suspect condition, or with characteristics that increase the risk in storage will be stored separately.

4–4. Mixed storage

a. Table 4–3 shows how different SCGs of ammunition and explosives can be mixed in storage. Exceptions are listed in b, below.

b. Certain locations within the United States, its territories, and possessions designated by the Army and with site approval from the DDESB to store ammunition in rapid response configurations and Basic Load Ammunition Holding Areas (BLAHA) outside the United States are authorized to store ammunition without regard to compatibility. The maximum net explosive quantity (NEQ) at any of these locations storing mixed compatibility ammunition must not exceed 4000 kg (8820 pounds NEW) calculated in accordance with paragraph 14–2d of this pamphlet.

4–5. Storage compatibility groups

a. Assignment. Ammunition and explosives are assigned to one of 13 SCGs as follows:

(1) *Group A.* Bulk initiating explosives that have the necessary sensitivity to heat, friction, or percussion to make them suitable for use as initiating elements in an explosives train. Examples are wet lead azide, wet lead styphnate, wet mercury fulminate, wet tetracene, dry cyclonite (RDX), and dry pentaerythritol tetranitrate (PETN).

(2) *Group B.* Detonators and similar initiating devices not containing two or more independent safety features. Items containing initiating explosives that are designed to initiate or continue the functioning of an explosives train. Examples are detonators, blasting caps, small arms primers, and fuzes.

(3) *Group C.* Bulk propellants, propelling charges, and devices containing propellant with or without their own means of ignition. Items that, upon initiation, will deflagrate, explode, or detonate. Examples are single-, double-, triple-base and composite propellants, rocket motors (solid propellant), and ammunition with inert projectiles.

(4) *Group D.* Black powder, high explosives (HE), and ammunition containing HE without its own means of initiation and without propelling charge, or a device containing an initiating explosives and containing two or more independent safety features. Ammunition and explosives that can be expected to explode or detonate when any given item or component thereof is initiated except for devices containing initiating explosives with independent safety

features. Examples are bulk trinitrotoluene (TNT), Composition B, black powder, wet RDX or PETN, bombs, projectiles, cluster bomb units (CBUs), depth charges, and torpedo warheads.

(5) *Group E.* Ammunition containing HE without its own means of initiation and with propelling charge (other than one containing a flammable or hypergolic liquid). Ammunition or devices containing HE and containing propelling charges. Examples are artillery ammunition, rockets, or guided missiles.

(6) *Group F.* Ammunition containing HE with its own means of initiation and with propelling charge (other than one containing a flammable or hypergolic liquid) or without a propelling charge. Examples are grenades, sounding devices, and similar items having an in-line explosives train in the initiator.

(7) *Group G.* Fireworks, illuminating, incendiary, and smoke, including hexachloroethane (HC) or tear-producing munitions other than those munitions that are water activated or which contain white phosphorous (WP) or flammable liquid or gel. Ammunition that, upon functioning, results in an incendiary, illumination, lachrymatory, smoke, or sound effect. Examples are flares, signals, incendiary or illuminating ammunition, and other smoke or tear-producing devices.

(8) *Group H.* Ammunition containing both explosives and WP or other pyrophoric material. Ammunition in this group contains fillers which are spontaneously flammable when exposed to the atmosphere. Examples are WP, plasticized white phosphorous (PWP), or other ammunition containing pyrophoric material.

(9) *Group J.* Ammunition containing both explosives and flammable liquids or gels. Ammunition in this group contains flammable liquids or gels other than those which are spontaneously flammable when exposed to water or the atmosphere. Examples are liquid- or gel-filled incendiary ammunition, fuel-air explosives (FAE) devices, flammable liquid-fueled missiles, and torpedoes.

(10) *Group K.* Ammunition containing both explosives and toxic chemical agents. Ammunition in this group contains chemicals specifically designed for incapacitating effects more severe than lachrymation. Examples are artillery or mortar ammunition (fuzed or unfuzed), grenades, and rockets or bombs filled with a lethal or incapacitating chemical agent. (See note 5, fig. 4–1.)

(11) *Group L.* Ammunition not included in other compatibility groups. Ammunition having characteristics that do not permit storage with dissimilar ammunition belong in this group. Examples are water-activated devices, prepackaged hypergolic liquid-fueled rocket engines, certain FAE devices, triethylaluminum (TEA), and damaged or suspect ammunition of any group. Types presenting similar hazards may be stored together but not mixed with other groups.

(12) *Group N.* Ammunition containing only EIDS. Examples are bombs and warheads.

(13) *Group S.* Ammunition presenting no significant hazard. Ammunition so packaged or designed that any hazardous effects arising from accidental functioning are confined within the package unless the package has been degraded by fire, in which case all blast or projection effects are limited to the extent that they do not hinder firefighting significantly. Examples are thermal batteries, explosives switches or valves, and other ammunition items packaged to meet the criteria of this group.

b. Means of initiation. As used in this standard, the phrase "with its own means of initiation" indicates that the ammunition has its normal initiating device assembled to it, and this device would present a significant risk during storage. However, the phrase does not apply when the initiating device is packaged in a manner that eliminates the risk of causing detonation of the ammunition if the initiating device functioned accidentally, or when fuzed end items are configured and packaged to prevent arming of the fuzed end items. The initiating device may be assembled to the ammunition provided its safety features preclude initiation or detonation of the explosives filler of the end item during an accidental functioning of the initiating device.

4–6. Class 1 or 6 chemical agent hazards or combined chemical agent and explosives hazards

a. Items in these classes are chemical agent-filled ammunition, chemical agents, and chemical agent-filled components. Depending upon the type of agent, its persistency, toxicity, or other characteristics, the primary safety considerations may be the area of agent dispersal rather than blast or fragment considerations.

b. Items that contain only toxic chemical components are assigned to HD 6.1. Items that contain both explosives and toxic chemical components are included in UN Class 1, ammunition and explosives, as appropriate. HD 6.1 requirements also shall be applied so that the explosives and toxic chemical hazards both are considered.

4–7. Underground storage

Ammunition with smoke producing, incendiary, flammable liquid or toxic chemical agent fillers may be stored in single chamber underground facilities but shall not be stored in multi-chamber facilities. Other than this restriction, ammunition and explosives of all compatibility groups may be placed in underground storage in compatible combinations as permitted above.

Table 4–1
EIDS and EIDS ammunition hazard divisions

Type	QD HD SCG
EIDS bulk	1.5D
EIDS loaded projectiles and/or warheads w/o fuzes or with EIDS fuzes [1,2]	1.6N
EIDS fuzes[1]	1.4D
EIDS loaded projectiles and/or warheads w/1.3 propelling charges and without fuzes or with EIDS fuzes[1,2]	1.3C/1.2C
EIDS loaded projectiles and/or warheads with non-EIDS fuzed and without 1.3 propelling charges	1.2D[3,4]
EIDS loaded projectiles and/or warheads with non-EIDS[2,4]fuzes and with 1.3 propelling charges	1.2E[3,4]

Notes:
[1] EIDS fuzed means that the fuze has an EIDS booster with an out-of-line non-EIDS explosive and two or more independent safety features. The fuze must be certified as invulnerable to accidental detonation of the warhead.
[2] Fuzed configuration must be tested for propagation.
[3] Unit risk may be justified on a case-by-case basis.
[4] Fuze must have two or more independent safety features and be independently classified group D.

Table 4–2
QD criteria for configuration of HD 1.6 components and assemblies with other HD components

Location	Explosives	Ammunition		
	Bulk	Non-EIDS fuzed[2]	Unfuzed or with EIDS fuze[2,4]	
		With or without 1.3 propelling charge	With 1.3 propelling charge	Without 1.3 propelling charge
Earth covered magazine	Div 1.3	Div 1.2[3]	Div 1.3	Div 1.3/1.4[5]
All others	Div 1.3	Div 1.2[3]	Div 1.3[1]	Div 1.3[1]

Notes:
[1] Unit risk minimum fragment distance applies, unless excepted on a case-by-case basis by the DDESB.
[2] Fuzed configuration must be tested for propagation.
[3] Unit risk may be justified on a case-by-case basis.
[4] EIDS fuzed means that the fuze has an EIDS booster with an out-of-line non-EIDS explosive and two or more independent safety features.
[5] Hazard class/division 1.4 applies for items packed in nonflammable pallets or packing, stored in earth covered steel, or concrete arch magazines when accepted by USATCES.

Table 4–3
Storage Compatibility Mixing Chart

Group	A	B	C	D	E	F	G	H	J	K	L	N	S
A	X	Z											
B	Z	X	Z	Z	Z	Z	Z					X	X
C		Z	X	X	X	Z	Z					X	X
D		Z	X	X	X	Z	Z					X	X
E		Z	X	X	X	Z	Z					X	X
F		Z	Z	Z	Z	X	Z					Z	X
G		Z	Z	Z	Z	Z	X					Z	X
H								X					X
J									X				X
K										Z			
L													
N		X	X	X	X	Z	Z					X	X

Table 4–3
Storage Compatibility Mixing Chart—Continued

Group	A	B	C	D	E	F	G	H	J	K	L	N	S
S		X	X	X	X	X	X	X	X			X	X

Notes:
[1] "X" indicates that these groups may be combined in storage, otherwise, mixing is either prohibited or restricted according to note #2.

[2] "Z" indicates that, when warranted by operational considerations or magazine nonavailability and when safety is not sacrificed, logical mixed storage of limited quantities of some items of different groups may be approved. These relaxations involving mixed storage shall be approved by the MACOM and are not considered waivers. However, DA shall determine which items within Group K may be stored together and which must be stored separately. Group K requires not only separate storage from other groups but may also require separate storage within the group.
[3] Compliance with compatibility criteria is not required for mission essential or operationally necessary quantities of explosives in Class/division 1.4 or 6.1 (excluding toxic chemical munitions); up to 100 lbs. NEW Class/division 1.3; and up to 50 lbs. NEW Class/Division (04)1.2. See paragraph 5–1b for Q-D requirements and additional information concerning small quantities of explosives.
[4] Equal numbers of separately packaged components of complete rounds of any single type of ammunition may be stored together. When so stored, compatibility is that of the assembled round; for example, WP filler in Group H, HE filler in Groups D, E, or F, as appropriate.
[5] Ammunition items without explosives that contain substances properly belonging to another U.N. hazard class may be assigned to the same compatibility group as items containing explosives and the same substance, and be stored with them.
[6] DA may authorize ammunition designated "practice" by National Stock Number (NSN) and nomenclature to be stored with the fully loaded ammunition it simulates.
[7] The MACOM may authorize the mixing of compatibility groups, except items in Groups A, K, and L, in quantities not exceeding 1,000 lbs. NEW per storage site. This is independent of note #2 and the exception found in paragraph 4–4b.
[8] For purposes of mixing, all items must be packaged in approved storage/shipping containers. Items shall not be opened for purposes of issuing unpackaged munitions in storage locations. Outer containers may be opened in storage locations for inventorying; for removing munitions still inside an approved inner package in limited amounts, and for magazines storing only hazard division 1.4 items, unpacking, inspecting, and repacking the hazard division 1.4 ammunition.
[9] Articles of compatibility Groups B and F shall each be segregated in storage from articles of other compatibility groups by means which are effective in preventing propagation of those articles.
[10] If dissimilar HD 1.6, SCG N munitions are mixed together and have not been tested to ensure nonpropagation; the mixed munitions are considered to be HD 1.2, SCG D for purposes of transportation and storage. When mixing SCG N munitions with SCGs B through G, see chapter 5, paragraph 5-2f through 5-2i about changing quantity-distance (QD) class/divisions.
[11] For storage purposes, fuzes assigned to SCG D are also compatibile with fuzes assigned to SCG B.

Chapter 5
Quantity-Distance

5–1. Explosives quantity-distance

a. The damage or injury potential of an explosion normally is determined by the distance between the potential explosion site (PES) and the exposed site (ES); the ability of the PES to suppress blast overpressure, fragments and debris; and the ability of the ES to withstand explosion effects. This chapter sets minimum standards for separating a PES from an ES taking these factors into account. These standards represent minimum acceptable levels of protection. Greater levels of protection should be applied where possible.

b. Compliance with Q-D and compatibility criteria is not required for mission essential or operationally necessary quantities of ammunition and explosives in HD 1.4 or 6.1 (excluding toxic chemical munitions). In addition, up to 100 pounds NEW HD 1.3 and up to 50 pounds NEW HD (04)1.2 may be stored in this manner.

(1) For document destroyers of HD 1.3, quantities in excess of 100 pounds may be stored without complying with Q-D and compatibility if the MACOM finds this necessary for security reasons.

(2) When HD (04)1.2 is stored inside or at less than IBD from inhabited buildings such as barracks, fragment barriers will be provided. Minimum acceptable fragment barriers are: 1/4 inch of mild steel plate, or one layer of sand bags, or 12 inches of loose sand or soil, or equivalent protection. Storage criteria applicable to items classified as HD 1.2.2 under the revised HD 1.2 procedures are contained in appendix I.

(3) Quantities in excess of the above must comply with all Q-D requirements of this chapter.

5–2. Quantity of explosives

For Q-D purposes, the total quantity of explosives at a site shall be calculated using the JHCS listing, or other similar listing approved by the MACOM. The JHCS is the preferred source and the recognized authority when data varies between sources.

a. When HDs 1.1 and 1.2 are located in the same site, determine the distances for the total quantity considered first as 1.1 and then as 1.2. The required distance is the greater of the two. Unless testing or analysis has shown otherwise, unpackaged 1.2 is treated as 1.1, regardless of the presence of 1.1. This unpackaging provision does not apply to 1.2 chemical munitions in facilities sited and approved to process 1.2 chemical munitions as 1.2 material.

b. When HDs 1.1 and 1.3 are located in the same site, determine the distances for the total quantity as 1.1. However,

when the HE equivalence of the 1.3 is known, the HE equivalent weight of the 1.3 items may be added to the total explosive weight of 1.1 items to determine the NEW for 1.1 distance determinations.

c. When HDs 1.2 and 1.3 are located in the same site, determine the required distance for each separately. The required distance is the greater of the two. The two quantities do not need to be added together for Q-D purposes.

d. When HDs 1.1, 1.2, and 1.3 are located in the same site, determine the distances for the total quantity considered first as 1.1, next as 1.2, and finally as 1.3. The required distance is the greatest of the three.

e. When HD 1.2 and/or 1.3 are stored with 1.1, and when requirements are controlling, the HE equivalence of the 1.2 and/or 1.3 may be used to compute the total NEW. The DDESB must approve HE equivalence data.

f. Explosives designated as HD 1.5 for transportation are considered to be HD 1.1 for storage or Q-D purposes.

g. When HD 1.6 is located with HD 1.1 or 1.5, HD 1.6 is considered HD 1.1 for Q-D purposes. When HD 1.6 is located with HD 1.2, HD 1.6 is considered HD 1.2 for Q-D purposes.

h. When HC/D 1.6 is located with HC/D 1.3, add the explosives weight of the HC/D 1.6 to the weight of the HC/D 1.3 and determine the distances for the total quantity considered first as HC/D 1.3 (if demonstrated by testing or analogy; otherwise, treat as HC/D 1.1) and second as HC/D 1.6. The required distance is the greater distance of the two.

i. The Q-Ds for HD 1.1, 1.2, 1.3, 1.5 or 1.6 individually or in combination, are not affected by the presence of HD 1.4.

j. If DDESB approved buffered configurations are provided, the NEW for Q-D purposes is the explosives weight of the largest stack plus the explosives weight for the buffer material.

k. Revised rules for combining HD 1.2 in storage with other HDs remain the same as stated above. For rules on mixed storage of HD 1.2.1, 1.2.2 and 1.2.3, see appendix I.

5–3. Measuring distance

a. Measure the distance to or from the outside of the nearest wall of the structure or room containing explosives. When a structure is subdivided to prevent mass detonation between compartments, measure from the outside of the nearest wall of the compartment containing the greatest explosives hazard. Measurements for open storage, such as modules and revetments, are made from stack face to stack face.

b. Where explosives are outdoors or on a vehicle parked in the open, distances are measured to the explosives. In protective shelters, distances are measured from the external wall of the shelter or stall containing the explosives or explosives-loaded vehicle. Distances are measured from the center of large missiles, launchers, or launch pads.

c. Measure to the nearest point of a nonexplosive location, building, vehicle, aircraft, or taxiway.

d. Measure to the centerline of the runway.

e. Measure to the nearest edge of open recreational areas. For golf courses, measure to the nearest edge of the tee or green or to the centerline of the fairway.

f. Measure to the nearest edge of the ship's channel.

g. Distances are expressed in feet or meters (as applicable) and measured along a straight line. For large intervening topographical features such as hills, measure over or around the feature, whichever is the shorter.

h. When railroad cars or motor vehicles containing ammunition and explosives are not separated from operating buildings, magazines, or open storage sites containing ammunition and explosives so as to prevent their mass-detonation, the total quantity of explosives will be considered as a unit. The separation distance will be measured from the nearest outside wall of the building, railcar, vehicle, or edge of open stack, as appropriate, to an ES. If the explosives are separated into smaller units so that propagation of the explosion between the explosives in the railcars, motor vehicles, or other units will not occur, the separation distance will be measured from the nearest controlling explosives unit, railcar, or vehicle to a target.

5–4. Q-D computations and determinations

a. For blast protection from 1.1 materials, required distances listed in this standard have been calculated using formulas of the type $D = KW^{1/3}$ where D is the distance in feet, K is a factor depending upon the risk assumed or permitted, and W is the NEW in pounds. When metric units are used in the formula $D = KQ^{1/3}$, the symbol Q denotes NEQ in kilograms and the distance D is expressed in meters (m). The value of K in English units is approximately 2.5 times its value in metric units. For example, if $D(m) = 6Q^{1/3}$, then $D(feet) = 15W^{1/3}$. Distance requirements determined by the formula with English units are sometimes expressed by the value of K, using the terminology "K9,""K11," "K18," to mean K = 9, K = 11, and K = 18.

b. Interpolation and extrapolation of Q-D in specified tables is authorized in the table footnotes.

c. In some cases, it may be advantageous for Q-D computations to subdivide a total quantity of mass-detonating explosives into smaller units. Simultaneous detonation will be prevented either by constructing a suitable barrier to provide "Category Four" protection or by adequately separating stacks. Intervening barriers designed to provide "Category Four" protection (prevents simultaneous detonation) in accordance with the principles contained in TM 5–1300 will satisfy this requirement. If this requirement is met, the NEW of the subdivision requiring the greatest

distance will govern. If this requirement is not met, Q-D computations must be based upon the summation of the mass-detonating explosives in all of the subdivisions.

d. Substantial dividing walls (SDWs) are designed to prevent bay-to-bay simultaneous detonation of 1.1 materials. Existing 12–inch reinforced concrete SDWs are approved for quantities no greater than 425 pounds per bay provided explosives are no closer than 3 feet from the SDW. Construction of new SDWs shall be in accordance with TM 5–1300.

e. In many operations, not only 1.1 but also 1.2, 1.3, and 1.4 are found in the various bays of an operating building. The following rules apply for Q-D determinations in these situations:

(1) If any bay containing 1.1 has a quantity greater than the limit of its walls, determine the distance based upon the total building quantity of all 1.1, 1.2, and 1.3 materials. Consider the total quantity first as 1.1, next as 1.2, and finally as 1.3. The required distance is the greatest of the three.

(2) If no bay containing 1.1 exceeds its limits, proceed as follows:

(a) Total all 1.3 in the building and determine the 1.3 distance.

(b) Total all 1.2 in the building and determine the 1.2 distance.

(c) Consider each bay containing 1.1 as a separate PES and determine the 1.1 distance from each of these bays.

(d) The greatest distance as computed by (a) through (c) above will govern.

f. The quantity of explosives to be permitted in each of two or more locations will be determined by considering each location as a PES. The quantity of explosives to be permitted in each of these locations shall be the amount permitted by the distance specified in the appropriate Q-D tables considering each as an ES in turn, except for service magazines. For service magazines that are part of operating lines, the distances are based on the quantity and type of ammunition and explosives in the service magazine or magazines, not the operating line.

g. It is impractical to specify Q-D separations allowing for the designed flight range of propulsive units (rockets, missile motors, and catapults) that properly belong in HD 1.1, 1.2, or 1.3. Therefore, maximum designed flight ranges for units in a propulsive state will be disregarded.

5–5. Fragments

a. An important consideration in analyzing the hazard associated with an accidental explosion is the effect of the fragments generated by the explosion.

(1) A hazardous fragment is defined as one having an impact energy of 58 foot-pounds or greater. For 1.1 materials, as well as 1.2 materials evaluated under the revised criteria of appendix I, hazardous fragment density is defined as one or more hazardous fragments per 600 square feet. This equates to a hit probability of 1 percent on a man with a face-on surface area of 6 square feet. For 1.2 and 1.3 materials, maximum fragment throw range (not density) is the basis for fragment distance. For further information, see TB 700–2.

(2) Fragments are classified as primary or secondary, depending on their origin. The minimum distance for protection from hazardous fragments is the greater of the primary or secondary fragment distance.

(3) Public traffic route (PTR) distance for fragment protection is 60 percent of the IBD for fragment protection.

(4) Fragment distances are not considered for intraline or intermagazine distance.

b. Primary fragments. Primary fragments are formed from the shattering of the explosives container.

(1) The container may be the casing of conventional munitions, the kettles, hoppers, and other metal containers used in manufacturing explosives, the metal housing of rocket engines, or similar items.

(2) These fragments are usually small and travel initially at velocities on the order of thousands of feet per second (fps).

(3) For HD 1.1, primary fragment distances are assigned as follows:

(a) Items without metal casings and items with thin metal casings do not produce primary fragments. No primary fragment distances apply. Examples of thin cased items are M15 land mines and demolition shaped charges with sheet metal bodies.

(b) All other metal cased items are considered primary fragment producers. IBD and PTR for fragment protection applies.

(c) For some 1.1 metal cased items, the IBD and PTR for primary fragment protection is given by a numerical figure (in parenthesis). This number will be placed to the left of the division designators, such as (18)1.1. An (18)1.1 item has a primary fragment IBD of 1800 feet and a primary fragment PTR of 60 percent of 1800 or 1080 feet.

(d) Most 1.1 items with metal casings do not have a fragment distance given in parenthesis. For these, a primary fragment IBD of 1250 feet and PTR of 750 feet applies unless the item is listed in table5–2, which provides primary fragment distance for selected 1.1 items for which detailed studies have been done.

(4) HD 1.2 items evaluated under the revised criteria as 1.2.1 or 1.2.2 will not have a parenthetical fragment distance indicator. Items in HD 1.2.3 and all HD 1.2 items evaluated under traditional methods will always have a parenthetically indicated primary fragment distance.

(5) For HD 1.3 items, a parenthetically indicated fragment distance is provided only for those 1.3 items capable of

producing fragments. Unlike 1.1, a fragment distance is not applied to those 1.3 items with metal casings which lack a parenthetically indicated distance. Consider 1.3 fragments as firebrands, burning 1.3 items projected from the 1.3 fire.

(6) For HD 1.4 items, fragment distance does not apply.

c. Secondary fragments include debris such as that from structural elements of the facility and from non-confining process equipment likely to break into enough pieces to significantly contribute to the total number of expected fragments. These fragments are generally larger in size than primary fragments and travel initially at velocities in the order of hundreds of fps. Secondary fragment distances are provided below.

(1) Secondary fragment hazards are considered only for 1.1 materials. and for 1.2.1 materials with an MCE greater than 100 pounds.

(2) PTR is 60 percent of IBD.

(3) For 100 pounds NEW or less of demolition explosives, thin-cased ammunition items, bulk high explosives, pyrotechnics of HD 1.1, and other inprocess explosives of HD 1.1, IBD is 670 feet. Exception: Table 5–1 allows lesser distances for storage in earth-covered magazines.

(4) For all types of HD 1.1 in quantities in excess of 100 but not more than 450 pounds, minimum distance to protect from secondary fragments will be the same as that shown for the corresponding MCE in Table I-1B.

(5) Alternate distances based upon analysis or test may be used if DDESB approves them. DDESB Technical Paper No. 13 provides an approved alternative method.

d. Fragment hazards must be considered along with the principal hazard of the HD in determining distance.

(1) For 1.1, determine both the fragment distance (if any) and the blast distance. Use the greater distance.

(2) For 1.2, (primary) fragment distance is the only consideration.

(3) For 1.3, consider both the fragment distance (if any) and the mass fire distance. Use the greater distance.

(4) For 1.4, fragment hazards are not considered. Consider only the moderate fire distance.

e. The following relaxations apply to the consideration of fragment hazards in determining IBD and PTR.

(1) For 1.1 and 1.3, fragment distance does not apply to an ES requiring IBD or PTR when the ES is inside the ammunition area and is exclusively supporting ammunition operations. For example, IBD is often applied between operating lines to ensure continued production. Each line is an IBD ES of the other. If the material in the lines were 1.1, then the IBD between them is based only on the blast hazard. Fragment hazards are not considered.

(2) For IBD to sparsely populated locations, the minimum 1250 feet may be reduced to 900 feet if both of the following conditions are met:

(a) No more than 25 persons are located in any sector bounded by the sides of a 45 degree angle (whose vertex is at the PES) and by the 900 feet and 1250 feet arcs (from the PES).

(b) The NEW does not exceed 11,400 pounds.

f. For HC/D 1.1 materials, Q-D to public highways depends on traffic density. which is considered at three levels: high traffic density, medium traffic density and low traffic density. Traffic density shall be averaged over a normal (non-holiday) week in terms of number of passengers during a 24–hour period. Minimum fragment distance reductions based on sparse population considerations addressed in paragraph 5–5 e (2), above, do not apply to PTRs. The default values given in the following paragraphs are based on car and rail speeds of 50 miles/hour and a ship speed of 10 miles/hour. In applying criteria other than the following, considerations such as vehicle speed, number of passengers per vehicle, protection afforded by the vehicle, variations in daily traffic levels in relation to explosive activities, and seasonal trends shall be taken into account to establish acceptable exposures. The default value of two passengers per car may be used to estimate traffic density.

(1) High Traffic Density – If routes have 10,000 or more car and/or rail passengers per day, or 2,000 or more ship passengers per day.

(2) Medium Traffic Density – If routes have 400 or more, but less than 10,000 car/rail passengers per day, or 80 to 2,000 ship passengers per day, then 60% of the specified minimum fragment distance for IBD applies. Medium traffic density criteria for fragments apply, as a minimum, to recreation activity that is extensive and occurs on a regular basis.

(3) Low Traffic Density – If routes have less than 400 car/rail passengers per day, or less than 80 ship passengers per day, no minimum fragment distance is required.

5–6. Quantity-distance: expected effects and permissible exposures

a. Inhabited building distance. The inhabited building distance is $40W^{1/3}$ - $50W^{1/3}$ feet; 1.2 - 0.90 psi incident overpressure.

(1) *Expected effects.*

(a) Unstrengthened buildings are likely to sustain damage up to about 5 percent of the replacement cost.

(b) Personnel are provided a high degree of protection from death or serious injury, with likely injuries principally being caused by broken glass and building debris.

(c) Personnel in the open are not expected to be injured seriously directly by the blast. Some personnel injuries may

be caused by fragments and debris, depending largely upon the PES structure and the amount of ammunition and its fragmentation characteristics.

(2) *Control at IBD.* Broken glass and structural damage can be reduced by orientation and by keeping the surface area of exposed glass panels to a minimum or by using blast resistant windows.

(3) *Permissible exposures at IBD*

(a) Inhabited buildings, administrative, and housing areas.

(b) Installation boundaries, with two exceptions. First, if restrictive easements ("buffer zones") prohibiting inhabited buildings or other occupied areas are established beyond the installation boundary, then IBD applies to the edge of the restrictive easement and not to the boundary. Second, if manifestly uninhabitable land (unsuitable terrain, Government land not open to the public, and so forth) forms a buffer zone beyond the installation boundary, then IBD applies to the nearest inhabited building.

Note. For locations where installation boundary lines are penetrated by inhabited building Q-D arcs, the installation shall certify that conditions do not require inhabited building protection for the encumbered area and shall establish procedures to monitor the area for any change in that status.

(c) Training and recreation areas when structures are present. For an exception, see paragraph 5–6b(5)(d).

(d) Flight line passenger service involving structures.

(e) Main power houses providing vital utilities to a major portion of an installation.

(f) Storehouses and shops that, because of their vital, strategic nature or the high intrinsic value of their contents, should not be placed at risk.

(g) Functions that, if momentarily put out of action, would cause an immediate secondary hazard by their failure to function.

(h) Public highways with high traffic density.

(i) Certain types of power lines (see para 5–7*n*).

b. PTR distance. The PTR distance is $24W^{1/3}$ - $30W^{1/3}$ feet; 2.3 - 1.7 psi incident overpressure.

(1) *Expected effects (under 100,000 pounds HE): $24W^{1/3}$ feet; 2.3 psi.*

(a) Unstrengthened buildings are likely to sustain damage approximating 20 percent of the replacement cost.

(b) Occupants of exposed structures may suffer temporary hearing loss or injury from secondary blast effects such as building debris and the tertiary effect of displacement.

(c) Personnel in the open are not expected to be killed or seriously injured directly by blast. There may be some personnel injuries caused by fragments and debris, depending largely upon the PES structure and the amount of ammunition and its fragmentation characteristics.

(d) Vehicles on the road should suffer little damage unless hit by a fragment or unless the blast wave causes momentary loss of control.

(e) Aircraft should suffer some damage to appendages and sheet metal skin from blast and possible fragment penetration; however, the aircraft should be operational with minor repair.

(f) Cargo ships should suffer minor damage to deck structure and exposed electronic gear from blast and possible fragment penetration, but such damage should be readily repairable.

(2) *Control at PTR - $24W^{1/3}$* . The risk of injury or damage due to fragments from limited quantities of explosives at the PES can be reduced by barricading. Also, many situations arise when control of pressure by suitably designed suppressive construction at the PES or protective construction at the ES are practical.

(3) *Expected effects (over 250,000 pounds HE): $30W^{1/3}$ feet; 1.7 psi.*

(a) Unstrengthened buildings are likely to sustain damage approximating 10 percent of the replacement cost.

(b) Occupants of exposed unstrengthened structures may suffer injury from secondary effects such as building debris.

(c) Aircraft in landing and takeoff status may lose control and crash.

(d) Parked military and commercial aircraft will likely sustain minor damage due to blast but should remain airworthy.

(e) Personnel in the open are not expected to be killed or seriously injured directly by blast. There may be some personnel injuries caused by fragments and debris, depending largely upon the PES structure and the amount of ammunition and its fragmentation characteristics.

(4) *Control at PTR - $30W^{1/3}$* . The risk of injury or damage due to fragments from limited quantities of explosives at the PES may be reduced by barricading or applying minimum fragment distance requirements.

(5) *Permissible exposures at PTR distance.*

(a) PTRs with low and medium traffic densities.

(b) Personnel exposed to remotely controlled operations who have blast-attenuating and fragment-defeating shields, such as for those at control stations, need not be at PTR from the operation, but the shield must ensure no exposure to overpressures exceeding 2.3 psi incident. See paragraph 5–7*k* for more information.

(c) Open air recreation facilities (such as ball diamonds and volleyball courts) when structures are not involved. When these recreation facilities are solely for off-duty recreation of military personnel at their posts of duty, Q-D

requirements do not apply. This total relaxation of Q-D requirements applies only when the PES and the ES are related closely. Examples are a security alert force and the explosives facilities which they control and crews for quick reaction force armored vehicles and the explosives-loaded vehicles that these crews man during military action. It is not intended that these relaxations be used to encourage the building of elaborate installations that substitute for properly located rest and recreation (R&R) facilities or that they encourage collocation of essentially unrelated military functions.

(d) Training areas for unprotected military personnel including observation points and instruction areas for small arms and artillery firing ranges and similar fixed facilities (including small classrooms) designed for occasional use coincident with use by groups or classes using the range. Separation or other protection from permanent magazines and ammunition supply points is required, but not from ammunition and explosives needed for any particular exercise to achieve realism in training, nor from explosives in necessary on-the-job training operations for explosives workers.

(e) Aircraft passenger loading and unloading areas that do not include any structures.

(f) Certain types of power lines (see para 5–7*n*).

(g) Combat aircraft parking areas exposed to ammunition and explosives storage and operating facilities.

(h) Construction personnel who must, on a temporary basis, be near PESs to perform their jobs. If distances are less than PTR, the minimum distance shall be determined through risk management as approved by the installation commander. The risk assessment will address the probability and effects of an accidental explosion on the construction personnel and also will address any hazards the construction activity poses to the ammunition. Control measures, such as limiting activity at PESs to reduce the probability of explosion, will be devised as appropriate. Documentation of the risk assessment and control measures taken will be maintained until operations have been completed and personnel have permanently vacated the work site.

c. Barricaded intraline distance (IL(B)). The barricaded intraline distance is $9W^{1/3}$ feet; 12 psi incident overpressure.

(1) *Expected effects.*

(a) Unstrengthened buildings will suffer severe structural damage approaching total destruction.

(b) Severe injuries or death to occupants of the ES may be expected from direct blast, building collapse, or translation.

(c) Aircraft will be damaged beyond economical repair both by blast and fragments. If the aircraft are loaded with explosives, delayed explosions are likely from subsequent fires.

(d) Transport vehicles will be damaged heavily, probably to the extent of total loss.

(e) Immediate spread of the fire between two explosives locations is unlikely when barricades are interposed between them to intercept high-velocity low-angle fragments. Delayed propagation is possible from lobbed munitions and burning materials.

(f) Improperly designed barricades or structures may increase the hazard from flying debris, or may collapse increasing the risk to personnel and equipment.

(2) *Control at IL(B).* Barricading is required. Exposed structures containing equipment of high monetary value or critical mission importance or where personnel exposure is significant may require hardening to protect personnel and equipment.

(3) *Permissible exposures at IL(B) distance.*

(a) Operating buildings housing successive steps of a single production, renovation, or maintenance operation.

(b) Security alert force buildings.

(c) Facilities of a tactical missile site where greater distances from the PES cannot be provided for technical reasons.

(d) Breakrooms and change houses, if they are part of an operating line and are used exclusively by personnel employed in operations of the line.

(e) Temporary holding areas for trucks or railcars containing explosives to service production or maintenance facilities.

(f) Field operations in magazine areas when performing minor maintenance, preservation, packaging, or surveillance inspection.

(g) Unmanned auxiliary power facilities, transformer stations, water treatment and pollution abatement facilities, and other utility installations that serve the PES and are not an integral function in the PES, if their loss would not create an immediate secondary hazard. These applications need not be barricaded. An exception is unmanned auxiliary power generation or conversion facilities supplying power exclusively to the explosives storage area and security fence lighting may be located at fire protection distance from explosives facilities (50 feet for fire-resistant structures, 100 feet for nonfire-resistant structures).

(h) Dunnage preparation and similar support structures housing nonexplosives operations if used only by personnel employed at the PES.

(i) Service magazines that are part of operating lines. Distance between an explosives operating building and its

service magazines is determined by the quantity of explosives in the service magazines irrespective of the quantity in the operating building. Magazines serving the same line may be separated by magazine distance.

(j) Exposures as indicated in paragraph 5–6*d* (3) below if blast suppression and structure hardening provide comparable protection for personnel and equipment involved.

d. Unbarricaded intraline distance (IL(U)) 18W$^{1/3}$ feet; 3.5 psi incident overpressure.

(1) *Expected effects.*

(a) Direct propagation of explosion is not likely.

(b) Delayed communication of an explosion may occur from fires or equipment failure at the ES.

(c) Damage to unstrengthened buildings will be serious and approximate 50 percent or more of the total replacement cost.

(d) There is a 1 percent chance of eardrum damage to personnel.

(e) Serious personnel injuries are likely from fragments, debris, firebrands, or other objects.

(f) Cargo ships would suffer damage to decks and superstructure from being struck by fragments and having doors and bulkheads on the weather deck buckled by overpressure.

(g) Aircraft can be expected to suffer considerable structural damage from blast. Fragments and debris are likely to cause severe damage to aircraft at distances calculated from the formula 18W $^{1/3}$ when NEWs under 9,000 pounds are involved.

(h) Transport vehicles will incur extensive, but not severe, body and glass damage consisting mainly of dishing of body panels and cracks in shatter-resistant window glass.

(2) *Control at IL(U).* Many situations arise in which control of pressure by suitably designed suppressive construction at the PES or protective construction at the ES are practical. Using such construction to withstand blast overpressure is encouraged if it is more economical than distance alone, or if sufficient distance is not available to prevent the overpressure from exceeding this level.

(3) *Permissible exposures at IL(U) distance.*

(a) Operating buildings housing successive steps in a single production, maintenance, or renovation operation.

(b) Surveillance buildings, laboratories in exclusive support of ammunition operations, field offices, and other labor intensive operations closely related to the ammunition mission. The minimum level of protection for these types of operations will be IL(U), regardless of whether a barricade is provided.

(c) Occupied comfort, safety, and convenience buildings exclusively in support of the PES (such as lunchrooms, motor pools, area offices, auxiliary fire stations, transportation dispatch points, and shipping and receiving buildings (not magazine area loading docks).

(d) Parallel operating lines from one another, whether or not barricaded, provided the ammunition and explosives involved in each line present similar hazards. Operations with similar hazards may be conducted within a single operating building provided a hazards analysis verifies 3.5 psi (IL(U)) protection from one operation to the other.

(e) Operations and training functions that are manned or attended exclusively by personnel of the unit operating the PES. This includes day rooms and similar functions for units such as individual missile firing batteries or ammunition supply companies. Training functions permitted this level of exposure include organized classroom and field training of personnel who must perform explosives work at the PES. Maneuver areas, proving ground tracks, and similar facilities for armored vehicles also may be permitted this level of exposure since the vehicle should adequately protect the operators from fragments and debris.

(f) Maintenance of military vehicles and equipment when the PES is basic load or ready storage located outside the United States (para 14–4). The maximum credible event is limited to 4,000 kg or less NEQ, and the work is performed exclusively by and for military personnel of the unit for which the basic load of ammunition is stored.

(g) Minimum distance between separate groups of explosives loaded combat-configured aircraft or between aircraft and a pre-load or quick-turn site that serves to arm the aircraft. Barricades are required to reduce further communication and fragment damage, and to eliminate the necessity for totaling NEW. Loading ammunition and explosives aboard aircraft can be accomplished within each group of aircraft without additional protection.

(h) Service magazines that are part of operating lines. Distance between the service magazine and buildings in the operating line is based on the quantity of explosives in the service magazine irrespective of the quantity in the operating building. Magazines serving the same line may be separated by magazine distance.

(i) Container stuffing and unstuffing operations that are routine support of PES. This applies only to main support functions set aside for support of ship loading or manufacturing operations. When the activity involves ship loading and unloading and the ES is an ammunition ship, the quantity at the container site will govern. (Container stuffing and unstuffing in a magazine area are permitted at intermagazine distances.)

(j) Ammunition and explosives being transported on conveyors within an operating building or from one operating building to another unless test data support reduced spacing.

(k) Parking lots for employees' privately owned automobiles at multiple PESs will be sited at intraline distance from each PES. When a parking lot supports a single PES, it may be separated at less than intraline only from its associated facility. A minimum distance of 100 feet to the associated facility is required to protect it from vehicle fires. Access for

emergency vehicles must be provided. Parking lots for administrative areas will be located at PTR distance from all PESs (minimum fragment distances apply).

e. Aboveground magazine distance. Aboveground magazine (MAG) distance is barricaded - $6W^{1/3}$ feet, 27 psi incident overpressure and unbarricaded - $11W^{1/3}$ feet, 8 psi incident overpressure.

(1) *Expected effects - barricaded magazine distance.*

(a) Unstrengthened buildings will be destroyed completely.

(b) Personnel will be killed by direct action of blast, by being struck by building debris, or by impact against hard surfaces.

(c) Transport vehicles will be overturned and crushed by blast.

(d) Explosives vessels will be damaged severely, with propagation of explosion likely.

(e) Aircraft will be destroyed by blast, thermal, and debris effects.

(2) *Control at MAG.* Barricades will prevent immediate propagation of explosion, but provide only limited protection against delayed propagation.

(3) Expected effects - unbarricaded magazine distance.

(a) Damage to unstrengthened buildings will approach total destruction.

(b) Personnel are likely to be injured seriously by the blast, fragments, debris, and translation.

(c) There is a 20 percent risk of eardrum rupture.

(d) Explosives vessels are likely to be damaged extensively and delayed propagation of explosion may occur.

(e) Aircraft will be damaged heavily by blast and fragments; ensuing fire will likely destroy them.

(f) Transport vehicles will sustain severe body damage, minor engine damage, and total glass breakage.

(4) *Control at unbarricaded magazine distance.* Barricading will reduce significantly the risk of propagation of explosion and personnel injuries from fragments.

(5) *Permissible exposures at magazine distance.* Magazines for HD 1.1 will be separated one from another in accordance with tables 5–5 and 5–6. Paragraph 5–8 below explains how to use table 5–6.

5–7. Facilities siting criteria

This paragraph establishes criteria for siting explosives and nonexplosive facilities with respect to PESs.

a. Administrative and industrial areas.

(1) Administrative and industrial areas will be separated from PESs by IBD.

(2) Auxiliary facilities such as heating plants, line offices, break rooms, briefing rooms for daily work schedules or on-site safety matters, joiner shops, security posts, and similar locations may be at explosives operations servicing only one building or operation. They will be located and constructed to provide prudent fire protection.

b. Classification yard.

(1) To protect the classification yard from external explosions, separation distances will be at least the applicable magazine distance.

(2) Specific Q-D separation is not required from the classification yard to ESs other than explosives locations when the classification yard is used exclusively for the following:

(a) Receiving, dispatching, classifying, and switching of cars.

(b) When a classification yard is used solely as an interchange yard, see paragraph 5–7*e* below.

(c) Conducting external inspection of motor vehicles and railcars, or opening of free rolling doors of railcars to remove documents and make a visual inspection of the cargo.

(3) If the yard is used at any time for any purpose other than listed in (2) above such as placing or removing dunnage or explosive items into or from cars, then Q-D must apply to nonexplosives locations as well as explosives locations.

c. Ranges used to detonate ammunition for demilitarization, demonstration, and explosives ordnance disposal. Control sites for ammunition and explosives destruction, demonstration, and EOD operations must be at intraline distance from other PESs based on the PES NEW. The minimum distances to essential and nonessential personnel on these ranges are as follows:

(1) *Essential personnel.* Competent authorities on site determine the minimum separation distance for essential range personnel. These authorities will also determine who is essential.

(2) *Nonessential personnel.* This paragraph provides the primary criteria for protection of nonessential personnel. If this criteria cannot be met, then the criteria in paragraph 5–7*k* may be used as an alternate.

(a) Nonessential personnel shall be separated from demolition range operations by a distance sufficient to protect

from both blast and fragments or debris. This distance is determined by first finding the blast distance, then the fragment or debris distance, then choosing the greater distance.

(b) For aboveground (unburied) detonations, use table 5–7 to determine blast and fragment or debris distance. Instead of the formula $D = 328W^{1/3}$, the 0 foot column of table 5–8 may be used.

(c) For buried detonations, the distances in table 5–7 may be reduced as follows:

(d) Use table 5–8 to determine reduced blast distance for buried detonations.

(e) Use the following procedure to determine reduced fragment or debris distance for buried detonations: For existing detonation operations for which approved local SOPs prescribe procedures which experience has shown adequate to contain fragments within the controlled access area, existing distances will be considered adequate. For new detonation operations such as those involving a greater quantity or different type of munitions, applicable on-site authorities may determine earth cover depth and safe separation distance by conducting thorough reconnaissance of adjoining lands during trials to observe debris and fragment throw ranges, and then adding 20 percent to the maximum observed throw range as an appropriate safety factor.

(f) In addition to burial, protective structures for non-essential personnel may also allow use of distances less than those required in table 5–7. The protective structures must limit blast overpressure to occupants to no more than 0.065 psi, and must protect completely from all fragments and debris.

(g) Where demonstrations involve live fire (that is, cannon, rocket launchers, and so forth), competent local authorities will determine safe viewing range from the impact area using surface danger zone data found in range safety regulations. The distances in table 5–7 do not apply.

d. Inert storage area. The MACOM will determine the acceptable protection for such areas after consideration of the value and importance of material in relation to the mission of the installation, the operational conditions, and the availability of space.

e. Interchange yards. Truck, trailer, or railcar interchange yards are not subject to Q-D regulations when they are used exclusively—

(1) For the interchange of vehicles or railcars containing ammunition and explosives between the commercial carrier and Army activities.

(2) To conduct external inspection of the trucks, trailers, railcars, or military demountable containers (MILVANs) containing ammunition and explosives.

(3) To conduct visual inspection of the external condition of the cargo in vehicles (such as trucks, trailers, railcars, and MILVANS) that passed the external inspection. If the yards are used at any time for any purpose other than above, applicable Q-D tables apply.

f. Interservice support and tactical facilities. Q-D between interservice support facilities and for interservice tactical facilities is as follows:

(1) *Common requirements.*

(a) Appropriate safety distances provided herein will be applied between Army facilities and facilities of another military service regardless of the boundary between the Army and other service installations.

(b) Safety criteria based on toxicity, noise, thermal radiation, flight trajectory, incendiary, or other hazards may be greater than explosives safety distance criteria. In these cases, the criteria based on the predominant hazard will be considered.

(2) *Q-D relationships.* The following Q-D relationships will apply to the separation of facilities of two services, neither of which is a tenant of the other:

(a) Explosives storage facilities of the Army will be separated from explosives storage facilities of another military service, as a minimum, by appropriate intermagazine distance.

(b) IBD will be provided from explosives storage or operating locations of the Army to explosives operating locations of another service. When operations in each facility present a similar degree of hazard or for joint or support operations, this separation may be reduced to the appropriate intraline distance.

(c) IBD will be provided from explosives storage and operating locations of the Army to explosives tactical facilities of another service. For joint or support operations, use the appropriate separation distance as though both facilities belonged to a single military service.

g. Loading docks. Separate loading docks will be sited on the basis of use. When servicing magazines, they must be separated from the magazines by intermagazine distances. When servicing operating buildings, they must be separated from the operating buildings by intraline distances. When servicing firing ranges, they must be separated from firing points having either unarmored vehicles or unprotected personnel by intraline distance. For firing points with armored vehicles when personnel are in the vehicles with the hatches closed, no Q-D applies, but a 100 feet fire protection distance must be maintained from the firing point to the loading dock.

h. Rail and truck holding yards.

(1) Generally, rail holding yards will be laid out on a unit car-group basis with each car-group separated by the applicable aboveground magazine distance.

(2) If the rail holding yard is formed by two parallel ladder tracks connected by diagonal spurs, the parallel tracks

and the diagonal spurs will be separated by applicable aboveground magazine distance for the unit-group quantities of HE.

(3) If the rail holding yard is a "Christmas tree " arrangement consisting of a ladder track with diagonal dead-end spurs projecting from each side at alternate intervals, the spurs will be separated by the applicable aboveground magazine distance for the net quantity of HE in the cars on the spurs.

(4) Generally, truck holding yards will be laid out on a unit truck-group basis with each group separated by the applicable aboveground magazine distances.

(5) Both rail and truck holding yards will be separated from other facilities by the applicable Q-D criteria.

(6) In addition to the temporary parking of railcars, trucks, trailers, or MILVANS containing ammunition and explosives, holding yards also may be used to interchange truck trailers or railcars between the commercial carrier and the Army activity and to conduct visual inspections.

i. Railcar and truck inspection stations.

(1) Specific Q-D separations are not required for inspection stations; however, they should be as remote as practical from hazardous or populated areas. Activities that may be performed at the inspection station after railcars or motor vehicles containing ammunition and explosives are received from the delivering carrier and before further routing within the installation are as follows:

(a) External visual inspection of the railcars or motor vehicles.

(b) Visual inspection of the external condition of the cargo packaging in vehicles (such as trucks, trailers, railcars) that have passed the external inspection indicated above.

(c) Interchange of trucks, trailers, railcars, or MILVANS between the common carrier and the Army activity.

(2) If any activities other than the above are conducted at the inspection station, Q-D applies.

(3) Any cars or trucks which appear hazardous will be isolated consistent with standard Q-D separation for the hazard class and explosives quantity involved. This will be done before any other action.

j. Recreational and training facilities. Open areas between explosive storage and handling sites and between these sites and nonexplosive buildings and structures shall be controlled carefully regarding use for recreation or training facilities. As a general rule, the fragment hazard will be severe from the explosion site out to approximately the PTR distances. Accordingly, recreation and training facilities, where people are in the open, will be sited at not less than PTR distances and preferably as near IBDs as practical. When structures, including bleachers, are included as part of these facilities, they will be sited at not less than IBD. For an exception, see paragraph 5–6*b*(5)(*d*).

k. Remote operations (see glossary).

(1) *Accidental ignition or initiation of explosives at remotely controlled and/or shielded operations.*

(a) Personnel shall be protected from potential blast overpressures, hazardous fragments, and thermal effects with attendant respiratory and circulatory hazards, when risk assessments indicate the probability of an accidental explosion with attendant overpressures and hazardous fragments, or an accidental flash fire with attendant thermal hazards is above an acceptable risk level as the MACOM determines on a case-by-case basis. The risk assessment shall include such factors as initiation sensitivity; quantity of materials; heat output; rate of burning; potential initiation sources; protective capabilities of shields, clothing, and fire protection systems; and personnel exposure to respiratory and circulatory hazards from inhalation of hot vapors and combustion products.

(b) When required by (a) above, protection for all personnel must be capable of limiting incident blast overpressure to 2.3 psi, fragments to energies of less than 58 ft-lb, and thermal fluxes to 0.3 calories per square centimeter per second. These protection levels shall be certified through analysis for cases where personnel are exposed at distances less than K24 or for situations where personnel exposure criteria are obviously exceeded. Shields complying with Military Standard (MIL STD) 398 are acceptable protection.

(2) *Intentional ignition or initiation of explosives.*

(a) At operations where intentional ignition or initiation of explosives is conducted (such as function, proof, lot acceptance testing, and so forth), and where remote operation and/or shielding is required as determined on a case-by-case basis by the MACOM concerned, protection for all personnel will meet the requirements of (1)(a) above, and must also be capable of limiting overpressure levels in personnel-occupied areas to satisfy MIL STD 1474, containing all fragments, and limiting thermal flux as expressed in table 5–9. Shields complying with MIL STD 398 are acceptable protection.

Table 5–1
HD 1.1 inhabited building and public traffic route distances

NEW in lbs col 1	Distance in ft to inhabited building distance from: earth-covered magazine Front col 2[1,8]	Side col 3[1,8]	Rear col 4[2,8]	other PES col 5[3]	Distance in ft to public traffic route from: earth covered-magazine Front col 6[4,8]	Side col 7[5,8]	Rear col 8[6,8]	other PES col 9[7]
1	500	250	250	1250	300	150	150	750
5	500	250	250	1250	300	150	150	750
10	500	250	250	1250	300	150	150	750
20	500	250	250	1250	300	150	150	750
30	500	250	250	1250	300	150	150	750
40	500	250	250	1250	300	150	150	750
50	500	250	250	1250	300	150	150	750
100	500	250	250	1250	300	150	150	750
150	500	250	250	1250	300	150	150	750
200	700	250	250	1250	420	150	150	750
250	700	250	250	1250	420	150	150	750
300	700	250	250	1250	420	150	150	750
350	700	250	250	1250	420	150	150	750
400	700	250	250	1250	420	150	150	750
450	700	250	250	1250	420	150	150	750
500	1250	1250	1250	1250	750	750	750	750
600	1250	1250	1250	1250	750	750	750	750
700	1250	1250	1250	1250	750	750	750	750
800	1250	1250	1250	1250	750	750	750	750
900	1250	1250	1250	1250	750	750	750	750
1000	1250	1250	1250	1250	750	750	750	750
1500	1250	1250	1250	1250	750	750	750	750
2000	1250	1250	1250	1250	750	750	750	750
3000	1250	1250	1250	1250	750	750	750	750
4000	1250	1250	1250	1250	750	750	750	750
5000	1250	1250	1250	1250	750	750	750	750
6000	1250	1250	1250	1250	750	750	750	750
7000	1250	1250	1250	1250	750	750	750	750
8000	1250	1250	1250	1250	750	750	750	750
9000	1250	1250	1250	1250	750	750	750	750
10000	1250	1250	1250	1250	750	750	750	750
15000	1250	1250	1250	1250	750	750	750	750
20000	1250	1250	1250	1250	750	750	750	750
25000	1250	1250	1250	1250	750	750	750	750
30000	1250	1250	1250	1250	750	750	750	750
35000	1250	1250	1250	1310	750	750	750	785
40000	1250	1250	1250	1370	750	750	750	820
45000	1250	1250	1250	1425	750	750	750	855

Table 5–1
HD 1.1 inhabited building and public traffic route distances—Continued

NEW in lbs col 1	Distance in ft to inhabited building distance from: earth-covered magazine Front col 2[1,8]	Side col 3[1,8]	Rear col 4[2,8]	other PES col 5[3]	Distance in ft to public traffic route from: earth covered-magazine Front col 6[4,8]	Side col 7[5,8]	Rear col 8[6,8]	other PES col 9[7]
50000	1290	1290	1250	1475	775	775	750	885
55000	1330	1330	1250	1520	800	800	750	910
60000	1370	1370	1250	1565	820	820	750	940
65000	1405	1405	1250	1610	845	845	750	965
70000	1440	1440	1250	1650	865	865	750	990
75000	1475	1475	1250	1685	885	885	750	1010
80000	1510	1510	1250	1725	905	905	750	1035
85000	1540	1540	1250	1760	925	925	750	1055
90000	1570	1570	1250	1795	940	940	750	1075
95000	1595	1595	1250	1825	960	960	750	1095
100000	1625	1625	1250	1855	975	975	750	1115
110000	1740	1740	1290	1960	1045	1045	770	1175
120000	1855	1855	1415	2065	1110	1110	850	1240
125000	1910	1910	1480	2115	1165	1165	890	1270
130000	1965	1965	1545	2165	1180	1180	925	1300
140000	2070	2070	1675	2255	1245	1245	1005	1355
150000	2175	2175	1805	2350	1305	1305	1085	1410
160000	2280	2280	1935	2435	1370	1370	1160	1460
170000	2385	2385	2070	2520	1430	1430	1240	1515
175000	2435	2435	2135	2565	1460	1460	1280	1540
180000	2485	2485	2200	2605	1490	1490	1320	1565
190000	2585	2585	2335	2690	1550	1550	1400	1615
200000	2680	2680	2470	2770	1610	1610	1480	1660
225000	2920	2920	2810	2965	1750	1750	1685	1780
250000	3150	3150	3150	3150	1890	1890	1890	1890
275000	3250	3250	3250	3250	1950	1950	1950	1950
300000	3345	3345	3345	3345	2005	2005	2005	2005
325000	3440	3440	3440	3440	2065	2065	2065	2065
350000	3525	3525	3525	3525	2115	2115	2115	2115
375000	3605	3605	3605	3605	2165	2165	2165	2165
400000	3685	3685	3685	3685	2210	2210	2210	2210
425000	3760	3760	3760	3760	2250	2250	2250	2250
450000	3830	3830	3830	3830	2300	2300	2300	2300
475000	3900	3900	3900	3900	2340	2340	2340	2340

Table 5–1
HD 1.1 inhabited building and public traffic route distances—Continued

NEW in lbs col 1	Distance in ft to inhabited building distance from: earth-covered magazine Front col 2[1,8]	Side col 3[1,8]	Rear col 4[2,8]	other PES col 5[3]	Distance in ft to public traffic route from: earth covered-magazine Front col 6[4,8]	Side col 7[5,8]	Rear col 8[6,8]	other PES col 9[7]
500000	3970	3970	3970	3970	2380	2380	2380	2338

Notes:
[1] *Basis for columns 2 and 3 distances:*
1–45,000 lbs of debris hazard. Lesser distances permitted if proved sufficient to limit hazardous debris to 1 per 600 square feet.
Formula $D = 35W^{(1/3)}$ (blast overpressure) may be used if fragments and debris are absent.
45,000–100,000 lbs - blast overpressure hazard. Computed by formula $D = 35W^3$, $W = (d/35)^3$.
100,000–250,000 lbs - blast overpressure hazard. Computed by formula $D = 0.3955W^{0.7227}$, $W = (d/.3955)^{1.384}$.

250,000 lbs and above - blast overpressure hazard. Computed by formula $D = 50W^{1/3}$, $W = (d/50)^3$.

[2] *Basis for column 4 distances:*
1–100,000 lbs - debris hazard. Lesser distances are permitted if proved sufficient to limit hazardous debris to 1 per 600 square feet. The formula $D = 25W^{1/3}$ (blast overpressure) may be used if fragments and debris are absent. $W = (d/25)^3$.
100,000–250,000 lbs - blast overpressure hazard. Computed by the formula $D = 0.004125W^{1.0898,}$ $W = 0.004125W^{1.0898}$, $W = (d/.004125)^{.9176}$.

250,000 lbs and above - blast overpressure hazard. Computed by the formula $D = 50W^{1/3}$, $W = (d/50)^3$.
[3] *Basis for column 5 distances:*
1–30,000 lbs - fragments and debris hazard. Lesser distances permited as follows:
a. Thin-cased ammunition and bulk explosives with NEW to 100 lbs - 670 feet.
b. Thin cased ammunition and bulk explosives exceeding 100 lbs but less than 450 lbs - use incremental distances as shown for the corresponding MCE in Table I–4.
c. For bare explosives in the open with NEW greater than 450 lbs, distances are computed by the formula $D = 40W^{1/3}$. Distances greater than 1,250 feet are to be used when the 1.1 item in question has a parenthetically assigned fragment distance greater than 1,250 feet.
30,000–100,000 lbs - blast overpressure hazard. Computed by the formula $D = 40W^3$, $W = (d/40)^3$.
100,000–250,000 lbs - blast overpressure hazard. Computed by the formula $D = 2.42W^{0.5777}$, $W = (d/2.42)^{1.7331}$

250,000 lbs and above - blast overpressure hazard. Computed by the formula $D = 50W^{1/3}$, $W = (d/50)^3$

[4] Column 6 distances have the same hazard basis and are equal to 60 percent of column 2 distances.
[5] Column 7 distances have the same hazard basis and are equal to 60 percent of column 3 distances.
[6] Column 8 distances have the same hazard basis and are equal to 60 percent of column 4 distances.
[7] Column 9 distances have the same hazard basis and are equal to 60 percent of column 5 distances.
[8] The earth-covered magazine columns (columns 2–4 and 6–8) apply as follows:
a. For standard magazines, 26 feet by 60 feet or larger, the front, side, and rear columns may be used.
b. For nonstandard magazines, 26 feet by 60 feet or larger, only the side and rear columns may be used. For front exposures use the “other PES” column.
c. For standard or nonstandard magazines, smaller than 26 feet by 60 feet, the following applies: if the magazine loading density is less than or equal to 0.028 lb of NEW per cubic foot of the magazine’s internal volume, the front, side, and rear columns may be used. If the loading density is greater than this, use the “other PES” column for all exposures.

Table 5–2
Minimum primary fragment protection distance expressed in feet for selected HD 1.1 Items

Nomenclature	1 Unit[5]	2 Units	5 Units	10 Units[2]
AGM 65/A	400	500	500	500
AIM 7, MK38 Warhead	700	700	700	700
AIM 9	400	400	400	400
ASROC	500	500[4]		
Bomb, 750 lb, M117A2	690	820	1020	1470
Bomb, 500 lb, MK82	670	860	1080	1240
Chapparral	400	400	400	400
Harpoon	500			
Improved Hawk	900	900	900	900
Nike Hercules	900	1150	1150	1150
Penquin	500	500[4]		
Projectile, 175mm, M437A2	450	580	830	2070
Projectile,155mm, M107	400	510	720	1490
Projectile, 105mm, M1[1]	270	350	500	1000
Projectile, 8-inch, MK25	520	750	960	1240
Projecitle, 5-inch, MK49	280	430	660	1000
Tomahawk	500			

Table 5–2
Minimum primary fragment protection distance expressed in feet for selected HD 1.1 Items—Continued

Nomenclature	1 Unit[5]	2 Units	5 Units	10 Units[2]
Torpedoes not over 1500 NEW	500[3]	500[3]	500[3]	500[3]

Notes:
[1] Applies only to HE 105mm M1 cartridges and projectiles not in standard shipping and storage containers. These are HD 1.1.
[2] Ten units or more, until this distance is exceeded by table 5–1 distance.
[3] Distance applies to torpedoes with explosive hazard analogous to those tested (for example, MK16 war shot).
[4] This distance applies for a maximum of 3 units.
[5] A unit is one article for unpackaged items such as bombs, or one outer package of articles for items such as fuzes. If an operation involves palletized articles, the unit shall be considered as a pallet load.

Table 5–3
HC/D 1.1 intraline distances in feet from PESs other than earth-covered magazines[3]

NEW in lbs	Barricaded $D = 9W^{1/3}$	Unbarricaded $D = 18W^{1/3}$	NEW in lbs	Barricaded $D = 9W^{1/3}$	Unbarricaded $D = 18W^{1/3}$
50[1]	33	66	70,000	371	742
100	42	84	75,000	380	759
200	53	105	80,000	388	776
300	60	120	85,000	396	791
400	66	133	90,000	403	807
500	71	143	95,000	411	821
600	76	152	100,000	418	835
700	80	160	125,000	450	900
800	84	167	150,000	478	956
900	87	174	175,000	503	1,007
1,000	90	180	200,000	526	1,053
1,500	103	206	225,000	547	1,134
2,000	113	227	250,000	567	1,134
3,000	130	260	275,000	585	1,171
4,000	143	286	300,000	602	1,205
5,000	154	308	325,000	619	1,238
6,000	164	327	350,000	634	1,269
7,000	172	344	375,000	649	1,298
8,000	180	360	400,000	663	1,326
9,000	187	374	500,000[2]	714	1,429
10,000	194	388	600,000	759	1,518
15,000	222	444	700,000	799	1,598
20,000	244	489	800,000	835	1,671
25,000	263	526	900,000	869	1,738
30,000	280	559	1,000,000	900	1,800
35,000	294	589	1,500,000	1,030	2,060
40,000	308	616	2,000,000	1,134	2,268
45,000	320	640	2,500,000	1,221	2,443
50,000	332	663	3,000,000	1,298	2,596
55,000	342	685	3,500,000	1,366	2,733
60,000	352	705	4,000,000	1,429	2,857
65,000	362	724	5,000,000	1,539	3,078

Notes:
[1] For less than 50 pounds, lesser distances may be used when structures, blast mats, or equipment will completely contain fragments and debris. Determine distances using the formula shown.
[2] Quantities above 500,000 pounds are authorized only for group IV liquid propellants.
[3] This table is not applicable when blast, fragments, and debris are completely contained as in certain test firing barricades.

Table 5–4
HD 1.1 intraline distances from earth-covered magazines (type of distance protection to be provided to ES)

NEW in pounds	Barricaded intraline explosion coming from:			Unbarricaded intraline explosion coming from:		
	Front[1]	Side	Rear	Front	Side	Rear
50	35	25	20	60	60	45
l00	45	30	30	80	75	55
200	60	40	35	100	95	70
300	65	45	40	120	105	80
400	75	50	45	130	120	90
500	80	55	50	140	125	95
600	85	60	50	150	135	100
700	90	60	55	160	140	105
800	90	65	55	170	150	110
900	95	70	60	175	155	115
1,000	100	70	60	180	160	120
1,500	115	80	70	210	185	135
2,000	125	90	75	230	200	150
3,000	145	100	85	260	230	175
4,000	160	110	95	290	255	190
5,000	170	120	100	310	275	205
6,000	180	125	110	330	290	220
7,000	190	135	115	340	305	230
8,000	200	140	120	360	320	240
9,000	210	145	125	370	330	250
10,000	215	150	130	390	345	260
15,000	245	175	150	450	395	295
20,000	270	190	165	490	435	325
25,000	290	205	175	530	470	350
30,000	310	220	185	560	500	370
35,000	325	230	195	590	525	390
40,000	340	240	205	620	545	410
45,000	355	250	215	640	570	425
50,000	370	260	220	660	590	440
55,000	380	265	230	680	610	455
60,000	390	275	235	700	625	470
65,000	400	280	240	720	645	480
70,000	410	290	245	740	660	495
75,000	420	295	255	760	675	505
80,000	430	300	260	780	690	520
85,000	440	310	265	790	705	530
90,000	450	315	270	810	715	540
95,000	455	320	275	820	730	545
100,000	465	325	280	840	745	555
125,000	500	350	300	900	800	605
150,000	530	370	320	960	850	650
175,000	560	390	335	1,010	895	700
200,000	585	410	350	1,055	935	745
225,000	610	425	365	1,090	975	795
250,000	630	440	380	1,135	1,005	840
275,000	650	455	390	1,170	1,040	890
300,000	670	470	400	1,200	1,070	935
325,000	675	520	465	1,240	1,135	1,035
350,000	680	570	530	1,270	1,200	1,130
375,000	685	615	600	1,300	1,265	1,230
400,000	690	665	665	1,330	1,330	1,330
500,000	715	715	715	1,430	1,430	1,430

Notes:
[1] A separate intervening barricade is required between the front of the earth-covered magazine and the ES.

Table 5–5
HC/D 1.1 intermagazine hazard factors and distances

NEW	$1.1W^{1/3}$	$1.25W^{1/3}$	$2W^{1/3}$	$2.75W^{1/3}$	$4.5W^{1/3}$	$6W^{1/3}$	$9W^{1/3}$	$11W^{1/3}$
Column 1	Column 2	Column 3	Column 4	Column 5	Column 6	Column 7	Column 8	Column 9
100	7	7	10	13	21	28	42	51
200	7	8	12	16	27	35	53	65
300	8	9	14	19	31	41	61	74
400	9	10	15	21	34	45	67	81
500	9	10	16	22	36	48	72	88
600	10	11	17	24	38	51	76	93
700	10	11	18	25	40	54	80	98
800	11	12	19	26	42	56	84	103
900	11	12	20	27	44	58	87	107
1,000	11	13	20	28	45	60	90	110
1,500	13	15	23	32	52	69	103	126
2,000	14	16	26	35	57	76	114	139
4,000	18	20	32	44	72	96	143	175
5,000	19	22	35	47	77	103	154	189
6,000	20	23	37	50	82	109	164	200
7,000	21	24	39	53	86	115	173	211
8,000	22	25	40	55	90	120	180	220
9,000	23	26	42	58	94	125	188	229
10,000	24	27	43	60	97	130	194	237
20,000	30	34	55	75	123	163	245	299
30,000	35	39	63	86	140	187	280	342
40,000	38	43	69	94	154	206	308	377
50,000	41	46	74	102	166	221	332	406
60,000	43	49	79	108	177	235	353	431
70,000	46	52	83	114	186	248	371	454
80,000	48	54	87	119	194	259	388	474
90,000	50	56	90	124	202	269	404	493
100,000	51	58	93	128	209	279	418	511
125,000	55	63	100	138	225	300	450	550
150,000	59	67	107	147	240	319	479	585
175,000	62	70	112	154	252	336	504	616
200,000	65	74	117	161	264	351	527	644
225,000	67	76	122	168	274	365	548	669
250,000	70	79	126	174	284	378	567	693
300,000	74	84	134	184	302	402	603	737
350,000	78	88	141	194	318	423	635	776
400,000	81	93	148	203	332	442	664	811
450,000	85	96	154	211	345	460	690	843
500,000	88	100	159	219	358	477	715	873
600,000	93	106	169	232	380	506	759	928

Table 5–5
HC/D 1.1 intermagazine hazard factors and distances—Continued

NEW	$1.1W^{1/3}$	$1.25W^{1/3}$	$2W^{1/3}$	$2.75W^{1/3}$	$4.5W^{1/3}$	$6W^{1/3}$	$9W^{1/3}$	$11W^{1/3}$
Column 1	Column 2	Column 3	Column 4	Column 5	Column 6	Column 7	Column 8	Column 9
700,000	98	111	178	245	400	533	800	977
800,000	103	116	186	256	418	557	836	1,022
900,000	107	121	194	266	435	580	869	1,062
1,000,000	110	125	200	275	450	600	900	1,100
1,250,000	119	135	216	297	485	647	970	1,185
1,500,000	126	144	229	315	516	687	1,031	1,260
1,750,000	133	151	241	332	543	723	1,085	1,326
2,000,000	139	158	252	347	567	756	1,134	1,386
2,250,000	145	164	262	361	590	787	1,180	1,442
2,500,000	150	170	272	374	611	815	1,222	1,493
2,750,000	155	176	281	386	631	841	1,261	1,542
3,000,000	159	181	289	397	649	866	1,298	1,587
3,250,000	163	186	297	408	667	889	1,334	1,630
3,500,000	167	190	304	418	684	911	1,367	1,671
4,000,000	175	199	318	437	715	953	1,429	1,747
4,250,000	179	203	324	446	729	972	1,458	1,782
4,500,000	182	207	331	454	743	991	1,486	1,816
5,000,000	189	214	342	471	770	1,026	1,539	1,881
5,500,000	195	221	354	486	795	1,060	1,589	1,942
6,000,000	200	228	364	500	818	1,091	1,636	1,999
6,500,000	206	234	374	514	840	1,120	1,680	2,053
7,000,000	211	240	383	526	861	1,148	1,722	2,105
7,500,000	216	245	392	539	881	1,175	1,762	2,154
8,000,000	220	250	400	550	900	1,200	1,800	2,200
8,500,000	225	256	409	562	919	1,225	1,873	2,245
9,000,000	229	260	416	572	937	1,248	1,872	2,288
10,000,000	237	270	431	593	970	1,293	1,939	2,370
11,000,000	245	278	445	612	1,001	1,335	2,002	2,447
12,000,000	252	287	458	630	1,031	1,374	2,061	2,519
13,000,000	259	294	471	647	1,059	1,411	2,117	2,587
14,000,000	266	302	482	663	1,085	1,447	2,170	2,652
15,000,000	272	309	494	679	1,110	1,480	2,220	2,713

Table 5–6
HC/D 1.1 Guide for Intermagazine Distance [1,8,9]

Exposed Site[7,8]	Potential Explosion Site [7,8]							
		Earth Covered Magazine				Above Ground Magazine[3]		Module and /or cells
		Side	Rear	Front (B)	Front (U)	B	U	B or U
Earth Covered	Side	1.25	1.25	2.75	2.75	4.5	4.5	4.5
Magazine	Rear	1.25	1.25	2.0	2.0	4.5	4.5	4.5
(7-bar)[2]	Front (U)	2.75	2.0	6.0	6.0	6.0	6.0	6.0
	Front (B)	2.75	2.0	4.5	6.0	4.5	6.0	6.0
Earth Covered	Side	1.25	1.25	2.75	2.75	6.0	6.0	6.0
Magazine	Rear	1.25	1.25	2.0	2.0	6.0	6.0	6.0
(3-bar)[2]	Front (U)	4.5	4.5	9.0	9.0	6.0	9.0	9.0
	Front (B)	4.5	4.5	6.0	6.0	6.0	6.0	6.0
Earth Covered Magazine Un-Defined[2]	Side	1.25[4] 2.0[5]	1.25[4] 2.0[5]	4.5[4] 6.0[5]	4.5[4] 6.0[5]	6.0	6.0	6.0
	Rear	1.25	1.25	2.0	2.0	6.0	6.0	6.0
	Front (U)	6.0	6.0	6.0	11.0	6.0	11.0	6.0
	Front (B)	6.0	6.0	6.0	6.0	6.0	6.0	6.0
Above Ground	U	6.0	6.0	6.0	11.0	6.0	11.0	6.0
Magazine[2]	B	6.0	6.0	6.0	6.0	6.0	6.0	6.0
Modules and/or Cells	B	1.25	1.25	6.0	6.0	6.0	6.0	1.0[6]

Notes:
[1] Unless limited elsewhere, earth covered magazines and above ground magazines may be used to store 500,000 lbs NEW. A module or cell is limited to 250,000 lbs NEW.
[2] Descriptions of the earth covered magazines and their limits are in appendix G.
[3] Above ground magazines are all type of above grade (without earth cover) magazines or storage pads.
[4] Use this column for NEW in the PES up to 250,000 lbs.
[5] Use this column for NEW in the PES above 250,000 lbs.
[6] Modules and/or cells are defined in appendix G.
[7] Refer to paragraph 5-8 and figures 5-3 through 5-9 to determine what constitutes front, side and rear of earth covered magazines.
[8] Abbreviations used are barricaded (B) and unbarricaded (U).
[9] Numbers at the intersections are the K factors to be used.

Table 5–7
Personnel protection distances from aboveground detonations

	Blast distance (feet)	Fragment/debris distance
Nonfragmenting explosive material	$D = 328W^{1/3}$	1,250 feet
Bombs and projectiles with a diameter less than 5 inches (127mm)	$D = 328W^{1/3}$	2,500 feet
Bombs and projectiles with a diameter of 5 inches (127mm) or more	$D = 328W^{1/3}$	4,000 feet
All other ammunition	$D = 328W^{1/3}$	2,500 feet

Notes:
[1] The distance required is the greater of the blast distance or fragment/debris distance.

Table 5–8
Required blast overpressure protection distance in feet for nonessential personnel at ranges used for detonating ammunition for demilitarization, demonstration, or explosives ordnance disposal

NEW (lbs)	Burial depth in feet							
	0	1	2	3	4	5	10	15
1	328	79	16	16	16	16	16	16
5	561	261	104	41	28	28	28	28
10	707	398	191	92	44	35	35	35
20	890	464	326	182	102	57	45	45
30	1019	566	368	260	157	94	51	51
40	1122	650	439	329	208	131	56	56
50	1208	721	501	349	255	165	60	60
100	1522	984	737	553	414	326	76	76
150	1743	1171	911	708	550	428	105	87
200	1918	1322	1052	837	665	529	151	96
250	2066	1450	1172	948	767	620	198	103
300	2196	1562	1279	1047	858	702	243	110
350	2312	1663	1375	1137	941	778	288	116
400	2417	1755	1463	1220	1018	849	332	121
450	2514	1839	1545	1297	1089	915	375	134
500	2603	1918	1620	1369	1157	977	417	154
1000	3280	2515	2200	1924	1683	1472	754	360
1500	3755	2936	2612	2324	2067	1839	1025	556
2000	4133	3273	2943	2646	2380	2140	1258	739
2500	4452	3558	3224	2921	2647	2398	1465	894
3000	4731	3808	3471	3163	2883	2627	1652	1039
4000	5207	4236	3893	3578	3289	3023	1983	1301
5000	5609	4598	4251	3931	3635	3362	2273	1537
6000	5960	4915	4566	4241	3940	3660	2533	1752
7000	6274	5199	4847	4520	4214	3929	2769	1952
8000	6560	5457	5104	4773	4464	4175	2988	2138
9000	6823	5695	5340	5007	4695	4402	3191	2313
10000	7067	5916	5560	5225	4910	4614	3382	2479

Notes:
[1] This table provides distances for protection from blast overpressure only. Fragment distances are given in table 5–7 and may be reduced per paragraph 5–7*c* .
[2] The 0 foot column distances are for above ground or open pit detonations and are based on the formula: $D = 328W^{3/8}$.
[3] The columns 1 foot through 15 feet are for buried detonations and are generated from the program EARTHEX. These distances assume the use of alluvium soil, a silty material which is the lightest soil type. They also assume 'base weather conditions,' meaning low winds and high clouds. In lieu of this table, EARTHEX may be used for soil types other than alluvium (heavier soils may allow smaller distances), for atmospheric conditions such as low, stable clouds (which may increase distances), and for interpolation between table values. EARTHEX, an IBM compatible program, is available from the U.S. Army Technical Center for Explosives Safety.

Table 5–9
Thermal flux calculations

$Q = 0.62t^{-0.7423}$	Where: Q is the calories/square centimeter/second t is the time in seconds

Notes:
Shields complying with MIL STD 398 are acceptable protection.

(b) To determine overpressure protection requirements in accordance with MIL STD 1474, use tables 5–10 through 5–12, and figure 5–1. They provide separation distances and hearing protection requirements to protect against both blast injury to the body and hearing loss. There are three methods for using the tables and figure, depending on what type of equipment is available to measure sound (See table 5–13).

(3) For both accidental and intentional detonations, personnel hazards from broken glass can be minimized by building orientation and/or keeping the number of exposed glass panels and panel size to a minimum. When window

panels are necessary and risk assessment determines a glass hazard will be present, blast resistant windows must be used. The framing and/or sash of such panels must be strong enough to retain the panel in the structure.

l. Storage tanks.

(1) *Aboveground tanks.* To prevent rupture and collapse, unprotected aboveground storage tanks for hazardous materials (such as petroleum, oils, lubricants, industrial chemicals) will be separated from all PESs by IBD. Exceptions are as follows—

(a) Large permanent bulk storage facilities are of primary concern when applying IBD to storage tanks. For smaller tanks, it may be best to weigh the cost of distance and protective construction against the strategic value of the stored material, the ease of replacement after an accident, and the potential environmental impact. The MACOM may approve distances less than IBD without formal waiver through such a risk management process, but only if spill containment is provided to safeguard adjacent facilities.

(b) Distances less than IBD may be used when an engineered design protects against rupture and collapse from fragments and blast.

(c) Small quantities of POL and other hazardous materials used for operational purposes require no specific Q-D separation distance for explosives safety.

(d) A service tank supporting a single PES shall be separated from the PES by the appropriate NFPA distance (see NFPA, parts 30 and 31). The distance from the service tank to other PESs shall be the NFPA distance or the Q-D distance between the PESs, whichever is greater. Consider the following example: An explosives operating line consists of two buildings, A and B. For Q-D purposes, A and B are separated by 200 feet intraline distance. A service tank supports A. The NFPA requires 25 feet from the tank to A. The distance between the tank and the other PES (Building B) is the greater of the NFPA distance (25 feet) or the Q-D distance between A and B (200 feet). Therefore, the distance required between the tank and B is 200 feet.

(e) Q-D from underground ammunition storage to aboveground storage tanks must be determined on a site specific basis taking account of crater, blast, ground shock, debris hazards, and potential adverse environmental impacts.

(2) *Unprotected service tanks.* Unprotected service tanks which support aboveground explosives storage or operating complexes, but not inhabited buildings (such as those in administrative, supply, industrial, and housing areas) may be sited in accordance with table 5–14 provided the following conditions are met—

(a) The MACOM must accept the possible loss of the tanks and any collateral damage that a fire might cause if the tanks were punctured by fragments.

(b) A dike system must be installed meeting the requirements of NFPA, part 30 to provide spill containment.

(c) If the tank is supplied by a pipe system as opposed to a tank truck, then the supply pipe must be protected from blast and fragments to prevent a spill larger than the contents of the tank. If the supply pipe is underground, it will be located from PESs in accordance with paragraph 5–7*m.* If it is aboveground, use IBD or design protection in accordance with paragraph 5–7*l(*1)(*b*).

(3) *Storage tanks for water.* A key Q-D consideration is whether loss of the water tank is acceptable. If a water tank is used for firefighting and no adequate alternate water supplies exist, the tank is essential and its loss is unacceptable. If adequate alternate water supplies do exist, loss of the tank may be acceptable. However, consider other factors, such as the replacement cost of the tank and the effect of its loss on the installation mission, before making a final determination.

(a) If the loss of the water tank is acceptable, Q-D does not apply.

(b) If the loss of the water tank is unacceptable, IBD applies to aboveground water tanks in this category. Buried tanks and associated components of like value shall meet the siting requirements of paragraph 5–7*m.*

(c) The MACOM shall designate the approval authority level for the siting of aboveground water tanks within IBD of PESs, and for buried tanks or pipelines sited at less than the distances required by paragraph 5–7*m.*

m. Underground tanks or pipelines. These shall be separated from buildings or stacks containing ammunition and explosives of HDs 1.2 through 1.4 by a minimum distance of 80 feet. The separation for HD 1.1 shall correspond to the formula $D = 3.0W^{1/3}$ with a minimum distance of 80 feet.

n. Electrical supply lines. These lines are classified by purpose as transmission, distribution, or service. The following separation requirements apply:

(1) *Transmission lines.* Transmission lines are those lines supplying locations outside the installation uniquely, or in common with the installation. Any line carrying 69 KV or more shall be classified as a transmission line for Q-D purposes. The following separations apply from PESs to transmission lines and to the towers or poles supporting them:

(a) IBD, based on blast only (Use formulas in notes to table 5–1.), if the line in question is part of a grid system serving a large offpost area.

(b) PTR, based on blast only (Use formulas in notes to table 5–1.), if loss of the line will not create a serious social or economic hardship.

(c) A minimum distance equal to the length of the lines between the supporting poles or towers, if loss of the line does not cause loss of power (that is, power is rerouted through other existing lines and/or networks). This distance

may be further reduced if an effective means is provided to ensure that the energized lines, upon breaking, cannot come into contact with facilities of combustible construction or an open PES.

(2) *Distribution lines.* These are normally lines solely supplying multiple installation locations. Distribution lines, the poles or towers supporting them, and electrical substations directly connected to distribution lines will be separated from PESs by PTR, based on blast only. (Use formulas contained in notes to table 5–1.)

(3) *Service lines.* Service lines are those lines supplying individual installation locations. When a service line provides power to an explosives facility, the line must be run underground for the last 50 feet to the facility. Service lines not serving a combustible facility or an open PES will normally be no closer than the distance between the supporting poles or towers. If an effective means is provided to ensure that energized lines, upon breaking, cannot come into contact with the combustible facility or an open PES or its appurtenances, then they may be closer than the distance between the poles. An example of effective means includes messenger lines, cable trays, and ground fault circuit interrupters. Before implementing any of these means, a safety submission must be approved per chapter 8.

o. Ammunition and explosives transportation mode change locations. Movement and transfer of DoD-titled ammunition and explosives must be in compliance with national, international and host country specific transportation regulations. QD criteria apply to all transfer operations involving DoD-titled ammunition except for:

(1) Roll-on/roll-off operations (not involving lifting).

(2) Off-installation MILVAN/ISO container inter/intramodel transfers (involving highway and rail modes only) where containers are not stored or other operations are performed.

p. Burning areas. Sites for burning ammunition and explosives shall be separated from other facilities as specified below.

(1) To protect burning area essential personnel (those conducting the burning operation) and non-essential personnel (those conducting other ammunition operations not directly related to the burning ground operation) in ammunition facilities or areas will be located at a minimum of K24, based on the quantity at the burning grounds.

(2) All other personnel in administrative, housing, industrial, and other operations not related to ammunition will be located at a minimum of K40. If the NEW of the burn material is 100 pounds or less, the minimum distance is 670 feet. If the NEW of the burn material is over 100 pounds but less than 450 pounds, incremental distances as shown in Table I-1.B. for the corresponding NEW shall be the minimum. For any NEW over 450 pounds, the minimum distance is 1,250 feet.

(3) Burning grounds will be sited at intraline distance from other potential explosions sites.

5–8. Magazine siting requirements

a. Magazines are sited at intermagazine distance so that communication of explosion from one to another is unlikely. Actual siting requirements are influenced both by the construction features of the magazine and the types and quantities of ammunition and explosives they contain.

(1) If the specified thickness and slope of earth on magazines, described in para 8-30, are not maintained, the magazine will be sited as an unbarricaded aboveground magazine.

(2) Magazines must not be structurally weakened such that their asset protection capability is reduced.

(3) An analysis will be done to determine if the magazine being sited is equivalent to the requirements indicated in the drawings in appendix G.

(4) New construction of earth covered magazines must meet the requirements of the current revisions of the drawings listed in appendix G.

b. Magazines for HC/D 1.1 will be separated one from another in accordance with tables 5-5 and 5-6. Magazine orientation aspects of table 5-6 involve the following considerations:

(1) When earth-covered magazines containing HC/D 1.1 ammunition and explosives are sited so that any one is in the forward sector of another, the two must be separated by distances greater than the minimum permitted for side-to-side orientations. The forward sector, or “front”, for earth covered magazines is that area 60 degrees either side of the magazine centerline with the vertex of the angle placed so that the sides of the angle pass through the intersection of the headwall and sidewalls. The greater distances are required primarily for the protection of the door and headwall structures against blast from a PES forward of the exposed magazine- and to a lesser extent due to the directionality of effects from the source. The rear sector is that area 45 degrees to the outside of imaginary line extending rearward from the magazine sidewalls. See figure 14-3 for a diagram depicting front, side and rear sectors. When a blast wave is reflected from a surface at other than grazing incidence (side-on orientation), the overpressure may be increased substantially over the free field value. High reflected pressure and impulse could damage doors and headwalls and

propel the debris into the igloo so that explosion is communicated by impact of such debris upon the contents. The effect of magazine orientation must also be considered when applying the revised HD 1.2 criteria of appendix I.

(2) Examples of siting rules relative to magazine orientation follow:

(a) If the headwalls of both A and B (figures 5-3 and 5-4) are outside the 120 degree sector (60 degrees either side of the centerline), use side-to-side exposures.

(b) If the headwall of A (figure 5-5) is outside the 120 degree sector of B but the headwall of B is inside the 120 degree sector of A, use side-to-front exposures.

(c) If the headwalls of A and B (figure 5-6) are within the 120 degree sector of each other and are not provided with a separate door barricade, use front-to-front unbarricaded exposures. If one or more separate door barricades are present and meet the requirements of chapter 8, such as shown in the exposure A to C, site C as being barricaded and A as being unbarricaded. Site A as a front-to-side ES.

(d) In the arrangement shown in figures 5-7 and 5-8, the earth-covered magazines A and B are either of significantly different length or canted in such a manner that one of them is within the 120-degree sector of the headwall of the other. Site A as a side-to-front ES and B as a front-to-side ES.

c. When considering relationships between earth-covered magazines and above ground magazines or facilities requiring intraline distances and both contain HC/D 1.1 A&E, the question regarding the use of barricaded (B) or unbarricaded (U) distances arise. The following criteria shall apply:

(1) For siting applications, a barricade in front of an earth-covered magazine, which is the PES, does not allow the ES to use barricaded distances. When the barricade is in front of an earth-covered magazine, which is an ES, then barricaded distances may be used.

(2) For siting applications, a barricade in front of an above ground magazine which is the PES does not allow the ES to use barricaded distances. When the barricade is in front of an above ground magazine which is an ES, then barricaded distances may be used.

(3) The earth cover on the side and rear of an earth-covered magazine may be treated as barricades for siting purposes.

d. Other factors limiting earth-covered magazine storage are:

(1) Quantities above 500,000 lbs NEW in one storage location are not allowed except for liquid propellants.

(2) The distance given for up to 100 lbs NEW constitutes the magazine spacing permitted.

e. Siting requirements specified above apply only to the storage of HD 1.1 ammunition and explosives. Existing 7-bar, 3-bar, or undefined earth-covered magazines, regardless of orientation, standard or nonstandard (and sited one from another for at least 100 pounds HD 1.1), may be used to their physical capacity for the storage of HD 1.2, 1.3, and 1.4, provided distances to other exposures comply with applicable Q-D tables. Other restrictions, as detailed in appendix I, may apply to HD 1.2 items stored in earth-covered magazines using the revised 1.2 criteria.

5–9. Quantity-distance tables

a. HD 1.1 Q-D tables (tables 5–1 through 5–6).

(1) HD 1.1 includes items which mass-detonate. The principal hazards are blast and fragments.

(2) Separation distances required from earth-covered magazines and other types of PESs to exposures requiring inhabited building and PTR protection (see paras 5–6a and b) are listed for various quantities of HD 1.1 in table 5–1. Specified separations from earth covered magazines take into account reductions in blast overpressure, structural debris, and primary fragments attributable to the earth cover of the magazines. The PTR distances are 60 percent of IBDs because of the transient nature of exposure.

(3) Separation distances required between PESs and those ESs requiring intraline distance protection (see paras 5–6c and 5–6d) are listed for various quantities of HD 1.1 in tables 5–3 and 5–4. Testing has shown some attenuation of the airblast overpressure from the sides and rear of earth-covered magazines relative to the unconfined surface burst configuration. If the PES is an earth-covered magazine, use table 5–4. If not, use table 5–3. The distance required between an explosives operating building and its service magazine is determined by the quantity of explosives in the service magazine irrespective of the quantity in the operating building.

(4) Magazines for HD 1.1 shall be separated one from another per tables 5–5 and 5–6.

b. HD 1.2 Q-D table (table 5–15).

(1) HD 1.2 presents a fragment hazard. HD 1.2 includes items configured for storage and transportation that do not mass detonate when a single item or package in a stack ignites. Explosions cause these items to burn and explode progressively, a few at a time, projecting fragments, firebrands, and unexploded items from the explosion site. Blast effects are limited to the immediate vicinity. Heavy confinement, such as that in underground storage, may alter 1.2 explosion behavior significantly so that large aggregates of the 1.2 quantity may detonate en masse. Distances for HD

1.2 items evaluated under traditional standards are shown below and in table 5–15. See appendix I for criteria applicable to HD 1.2 items evaluated under the revised 1.2 criteria.

(a) Fragment distances are assigned to 1.2 items in 100 foot increments, starting at 200 feet. Currently, the maximum 1.2 fragment distance is 1,800 feet.

(b) Separate barricades and magazine earthcover do not reduce IBD and PTR. Long-range, high-angle fragments fly over the barricade. In earth-covered magazines, high angle fragments may eventually escape from the top and the front of the magazine due to breaching of the arch after a prolonged 1.2 event.

(c) There is a 500,000 pounds (lbs) NEW storage limit for all aboveground storage structures for items of this HD with an IBD requirement greater than 800 feet.

(2) Public traffic route distances give consideration to the transient nature of the exposure in the same manner as for HD 1.1. Public traffic route distance is computed as 60 percent of the IBD for items of this HD.

(3) Intraline distances take account of the progressive nature of explosions involving these items (normally from spreading fire) and the ability to evacuate personnel from endangered areas before this progression involves large numbers of items.

(a) Projectiles may extensively damage exposed structures and delayed propagation of the explosion may occur. Projections may ignite combustibles.

(b) Intraline distance is computed as 36 percent of the IBD for items of this HD. However, if the HE at an operating line PES is limited to 5,000 pounds for items of this HD with an IBD requirement of 500 feet to 1,200 feet, then the intraline distance may be reduced to 200 feet.

(4) Aboveground magazine distances provide strong protection against any propagation of explosion. However, there is some risk of delayed propagation when the ES contains combustible dunnage or packing materials that may be ignited by projected firebrands.

(a) Items of this HD with IBD requirements of 1,200 feet or greater risk propagation to adjacent aboveground magazines, particularly when packed in combustible containers. Storage in earth -covered magazines is therefore preferred.

(b) The aboveground magazine distance requirement is 50 percent of the IBD for items in this HD with an IBD of less than 400 feet. The aboveground magazine distance requirement for HD 1.2 with an IBD between 400 and 700 feet is 200, and for HD 1.2 with an IBD of 800 feet and greater, it is 300 feet.

c. HD 1.3 (table 5–16). HD 1.3 includes items that burn vigorously and cannot usually be extinguished in storage situations. Explosions normally will be confined to pressure ruptures of containers and will not produce propagating shock waves or damaging blast overpressure beyond the magazine distance specified in table 5–16. Tossing about of burning container materials, propellant, or other flaming debris may cause a severe hazard of spreading fire.

d. HD 1.4 (table 5–17).

(1) HD 1.4 items present a moderate fire hazard with no blast hazard and virtually no fragmentation hazard. Q-Ds in table 5–17 are based on fire hazard clearance.

(2) Articles classified as 1.4S based on testing (as opposed to analogy) may be considered as inert for storage purposes and can be stored in any general purpose warehouse which provides adequate security. Questions about whether a given 1.4S item was classified by test or analogy shall be directed to USATCES.

e. HD 1.6. Quantity-distance separations for HD 1.6 ammunition will be based on the storage location and configuration. This information is detailed in table 5–18. A maximum of 500,000 pounds NEW will be permitted at any one location. Any special storage configuration and siting approved for HD 1.1 ammunition or explosives may be used to store like explosive weights of HD 1.6.

f. HD 6.1

(1) HD 6.1 includes items that contain only toxic or incapacitating chemical agents. Items containing both explosives and chemical agents are included in United Nation Organization Class 1, ammunition and explosives. The specific division (that is, 1.1, 1.2, and so forth) is based on testing in accordance with TB 700–2.

(2) Hazard zones for toxic chemical agents are determined by the relative toxicity of the agents, the amount released to the atmosphere and the rate at which they are released (that is, evaporation, pressure, or explosives dispersal), terrain features, and meteorological conditions. Hazard zone calculations are based on maximum credible events (MCEs), using DDESB Technical Paper No. 10, June 1980.

(3) Items containing both explosives and toxic chemical agents require application of both the appropriate HDs 1.1 through 1.4 Q-D and the HD 6.1 hazard zone distances.

5–10. Airfields, heliports, and seadromes

a. Scope and application.

(1) This section applies to airfields, heliports, and seadromes located within the United States, its territories, and its possessions used by the Army at which ammunition and explosives are under the control and custody of DOD military or civilian personnel. Chapter 14 applies where these requirements cannot be met in a foreign nation. Its provisions do not apply to explosives items installed on aircraft or contained in survival and rescue kits such as flares, signals, egress systems components, squibs, and detonators for jettisoning external stores, engine-starter cartridges, fire extinguisher

cartridges, destructors in electronic equipment, explosives components of emergency equipment, and other such items of materials necessary for safe flight operations.

(2) Combat aircraft loaded only with the munitions shown below are exempt from the intraline quantity distance requirements to related facilities.

(a) Gun ammunition 30mm or less of HD (04)1.2.(HD 1.2.2)

(b) HD 1.3 tactical missiles or pyrotechnics.

(c) HD 1.4 munitions.

(3) These Q-Ds will be applied together with airfield clearance criteria as prescribed by the Army and Federal Aviation Regulations (14 CFR 77) as follows:

(a) Combat aircraft parking areas, ammunition and explosives cargo areas, alert hangers, and shelters may be located within the airfield clearance zone insofar as these Q-D standards are concerned at airfields, heliports, and seadromes used exclusively by the Army, other services, and allied nations' military components. They must never be located in the ammunition and prohibited areas described in c below.

(b) For airfields, heliports, and seadromes not used exclusively by the Army, other services, or allied nations' military components, combat aircraft parking areas, ammunition and explosives cargo areas, alert hangars, and shelters shall be located as prescribed in tables 5–19 and 5–20.

b. Measurement of separation distances. In applying tables 5–19 and 5–20, distances will be measured as follows:

(1) *Loaded aircraft to loaded aircraft.* Measure the shortest distance between explosives on one aircraft to explosives on the adjacent aircraft.

(2) *Ammunition and explosives location to taxiways and runways.* Measure from the nearest point of the ammunition and explosives location to the nearest point of the taxiway and to the centerline of the runway.

c. Ammunition and prohibited areas (APAs). No ammunition, explosives, or explosives facilities may be located in APAs as defined below.

(1) The APA for fixed-wing visual flight rules (VFR) runways, fixed-wing instrument flight rules (IFR) runways, and rotary-wing IFR heliports are the ground areas under the normal fixed-wing VFR approach/departure (A/D) zones as described in TM 5–803–4 unless local conditions make a larger zone prudent.

(2) The APA for rotary-wing VFR heliports is the ground area under the VFR A/D zone for this type of facility as described in TM 5–803–4.

(3) APAs and A/D zones begin at the edge of the "landing area" (TM 5–803–4) for runways and heliport pads.

5–11. Pier and wharf facilities

See paragraph 11–6 for Q-D rules on pier and wharf facilities.

5–12. Liquid propellants

a. General requirements.

(1) These criteria are minimum requirements for all Army installations where liquid propellants are present. This includes liquid and gaseous substances used to propel rockets and missiles, and multicompartment tanks in which both liquid fuels and liquid oxidizers are stored.

(2) These criteria do not apply to—

(a) Liquid propellant manufacturing facilities.

(b) Prepackaged liquid propellant units when installed as components of weapon systems having assigned storage compatibility and explosives classifications.

(c) A single, minimum-size standard shipping container of a given propellant. This container may be one 55–gallon drum or one 500–pound net weight cylinder. Such containers will be stored in the normal manner prescribed for flammable liquids.

(d) The storage and handling of hydrocarbon fuels used to operate ships, aircraft, and vehicles. However, when hydrocarbon fuels serve the dual purpose of both fuel and liquid propellant, they will be treated as liquid propellants when the fuel is actually charged into the missile, rocket, ammunition item, or its component. Otherwise, store and handle them as flammable liquids in accordance with fire protection regulations.

(e) One nonstandard container with lesser quantities than (c) above.

(f) Liquid propellants developed for guns, howitzers, and other field cannon and hazard classified 1.1, 1.2, 1.3, 1.4 or 1.5.

(3) When storage involves other explosives (solid) or explosives items, use the Q-D criteria for those hazards together with the criteria for the liquid propellant.

(4) These criteria do not consider toxic hazards. If the toxic hazard is the controlling factor in siting and storing a liquid propellant, refer to the directive on toxic hazards, together with explosives criteria. When a site plan is submitted, it will consider both explosives and toxic hazards.

(5) Q-D tables below do not apply to propellants contaminated to a degree that would increase the hazards involved.

Send a request through channels to the U.S. Army Technical Center for Explosives Safety for assistance in determining the following:

(a) Q-D criteria for conditions other than those shown here; or, either of the following:

(b) Explosives equivalents for propellants

(c) Combinations other than those in table 5–21.

b. Determining the propellant quantity to consider in Q-D calculations.

(1) The NEW of a propellant is the total quantity of the propellant in a tank, drum, cylinder, or other container. When storage containers are not separated from each other by required distances, calculate the quantity of propellant on the basis of the total contents of all such storage containers. Propellant in related piping must be included where positive means have been provided for interrupting the flow during a mishap.

(2) Where incompatible propellants are not separated by the required distances, or there are no provisions to prevent their mixing, the combined quantity of the two will be used.

(3) When quantities of propellants are given in gallons, use table 5–22 to find the quantity in pounds.

c. Measuring separation distances to exposures.

(1) Measure the distance to the ES from the closest point of all hazard sources (containers, buildings, or positive cutoff points in piping).

(2) When the buildings containing propellant in cylinders or drums are effectively subdivided, measure distances from the nearest container or the separate subdivision of containers requiring the greatest separation.

d. Hazard and compatibility storage grouping. Liquid propellants may present hazards of various types and degrees (see table 5–23). The following groups are based on these hazards:

(1) *Group I—relatively low fire hazard.* These materials are the least hazardous. They have, or may develop, a fire hazard potential requiring some separation.

(2) *Group II—fire hazard.* These materials are strong oxidizers subject to rapid combustion. When they come in contact with certain materials, such as organic matter, they may present a serious fire hazard. Therefore, storage facilities are prescribed on the basis of quantities involved to minimize property loss.

(3) *Group III—fragment and deflagration hazard.* Storage containers of these materials may rupture in a fire or deflagration, or there may be a vapor phase explosion. Either the pressure rupture or vapor phase explosion can cause a fragment hazard from the container, its protective structure, or adjacent material.

(4) *Group IV—detonation hazard.* These materials present the same hazard as mass-detonating explosives. They create air blast overpressures as well as severe fragment hazards from containers and surrounding equipment and material.

e. Location factor. Since the hazards differ in each of the above groups, the predominant hazard of a propellant can vary with the storage location and the operation involved. In determining safety criteria and separation distances, consider the following conditions:

(1) *Range launch pads.* Range launch pads involve research, development, test, and space exploration launches. Proximity of fuel and oxidizer to each other makes these operations hazardous. Launch vehicle tanks are also involved. HE equivalents must be used.

(2) *Operational launch pads.* Activities at operational launch pads are similar to those at range launch pads. Launch vehicle tanks are involved at these locations. HE equivalents must be used for all quantities of incompatible propellants that could possibly become mixed during a mishap. When an operational launch pad is used for training launches, it will be considered a range launch pad.

(3) *Static test stands.* These units remain static and are subject to better control than obtainable in (1) and (2) above. To reduce the hazard, tanks should be separated (except fuel and oxidizer tanks that are mounted one above the other). HE equivalents must be used for all quantities of incompatible propellant that could possibly become mixed during a mishap.

(4) *Ready storage.* This storage is close to launch and static test stands, but it is not actually directly involved in feeding the engine. If the facility is designed to prevent mixing fuels and oxidizers or initiation of a detonation, it presents Group I through III hazards. However, if positive measures cannot be taken to prevent mixing of fuel and oxidizer or to prevent the propagation of a detonation, use HE equivalents.

(5) *Cold-flow test operations.* These present only fire and fragment hazards if the system is closed except for approved venting, is completely airtight, fuels and oxidizers are never employed concurrently, each commodity has a completely separate isolated system and fittings to positively prevent intermixing, and the propellants are of required purity. Otherwise, use HE equivalents.

(6) *Bulk storage.* This is the most remote storage. It is never directly connected to any launch or test operation. It consists of the area, tanks, and other containers used to hold propellant for supplying ready storage and, indirectly, run tanks where no ready storage is available. Fire and fragment hazards govern storage requirements. However, if positive measures cannot be taken to prevent mixing of fuel and oxidizer or to prevent propagation of a detonation, use HE equivalents.

(7) *Rest storage.* This resembles bulk storage. It is temporary holding at parking locations for barges, trailers, tank

cars, and portable tanks used for topping operations (when the storing vehicle is not directly engaged in the operation). It includes parking locations for such vehicles when they are unable to empty their cargo promptly into proper storage containers. Fire and fragment hazards govern. A transporting vehicle becomes a part of the storage container to which it is attached during propellant transfer.

(8) *Transfer pipelines.* These present minimum hazards when used to transfer Group I through III propellants between unloading points and storage areas or between storage areas and points of use. Group IV material is generally too hazardous to be moved any significant distance through such lines. Short fill, drain, or feeder lines that are part of a system are not considered transfer pipelines within the meaning of this paragraph. The following applies to transfer pipelines:

(a) Group I. No minimum Q-D has been set up. Give normal fire protection for each pipeline site.

(b) Groups II and III. Keep at least 25 feet between the pipeline and inhabited buildings of any type. Give normal fire protection for each pipeline site.

(c) Group IV. Generally considered too hazardous to transport by pipeline. However, if the line is designed to carry the material, apply the criteria in table 5–25.

f. Tables of distance.

(1) *Group I—relatively low fire hazard.* Table 5–24 applies.

(2) *Group II—fire hazard.* Table 5–24 applies.

(3) *Group III—fragment and deflagration hazard.* Table 5–24 applies.

(4) *Combined hazard groups.* When Groups I, II, and III materials are stored with Group IV under conditions described in paragraph 5–12*e*, tables 5–21 and 5–25 apply as appropriate.

(5) *Group IV—detonation hazard (100-percent HE equivalent).* Table 5–25 applies.

g. Compatible storage. Compatible storages of different propellants will be separated by the intragroup storage distances required by the more hazardous groups.

h. Incompatible storage. Separation distance between propellants of different SCGs will be the inhabited building distance for the propellent quantity and the group that requires the greater distance. There is an exception for propellants subdivided by barriers or by other means to prevent mixing during a mishap. For them intragroup separation applies.

5–13. Underground storage

a. Scope.

(1) Underground storage facilities include natural caverns and below grade, excavated chambers, but criteria of this section also apply to any storage facility providing the overpressure confinement effects typically encountered in underground storage. Use criteria of this section only when the minimum distance from the perimeter of a storage area to an exterior surface exceeds $0.25W^{1/3}$. Otherwise use above ground siting criteria. This minimum distance most often, but not always, equals the thickness of the earth cover. This section addresses explosives safety criteria both with and without rupture of the earth cover.

(2) Expected ground shock, debris, and airblast hazards from an accidental explosion in an underground storage facility depend on several variables, including the local geology and site specific parameters. These parameters vary significantly from facility to facility, so criteria listed here will likely be safety conservative for most geologies and configurations. Siting distances other than those listed may be used when validated by approved experimental or analytical results showing equivalent protection to that required.

(3) Q-D siting requirements of this section may be determined from the applicable equations or by interpolating between the table and figure entries. No specific limitation on NEW applies to underground facilities or to individual chambers within facilities.

(4) The provisions of this section do not apply to storage in earth-covered magazines described in Chapter 5 of this Standard.

b. Design of underground storage facilities.

(1) An underground storage facility may consist of a single chamber or a series of connected chambers. There may also be protective construction features in the facility. The chamber(s) may be either excavated or natural geological cavities. Figure 5-10 illustrates general concepts for several possible configurations of underground facilities.

(2) Design of new underground storage facilities must take into account site conditions, storage requirements and operational needs. Once these are established, a design may be developed based on Corps of Engineers definitive drawing number DEF 421-80-04.

(3) An underground storage site normally requires protection against lightning only for exposed or almost exposed parts. Metal and structural parts of the site that have less than 2 feet of earth cover should be protected as for an aboveground site. Lightning protection requirements must be considered on a site-specific basis.

c. Explosion effects in underground storage sites.

(1) Confinement caused by the very limited space in underground storage will cause very high pressures of prolonged duration from an accidental explosion. Blast waves and dynamic flow fields will travel at high velocity

throughout the facility. Ground shocks will be produced, and break-up of the earth cover with attendant debris throw may occur.

(2) Under conditions of heavy confinement and high loading density, HD 1.3 materials may, while either detonating or burning, produce intense gas pressures sufficient to rupture the earth cover and create a significant surface debris hazard.

(3) An accidental explosion involving only HD 1.2 material will likely start a fire that may be sustained by burning packages and other ammunition. This may cause further explosions that become more frequent as the fires build and multiply, until everything in the site is destroyed. Results of these repeated explosions will depend on the type and quantity of munitions, the type of explosion produced, and the layout of the facility. Hazards created outside the underground facility will likely not be as severe as those produced by HD 1.1 or 1.3 material.

d. Protection provided. Quantity-distance criteria listed here provide separation distances from stored ammunition and explosives to mitigate the hazards caused by ground shock, debris, or airblast. The required distance for a given quantity and storage condition is that corresponding to the dominant (farthest-reaching) hazard that is applicable to the exposure under consideration. It is therefore the largest of the distances determined to be necessary for protection against the individual effects considered in turn.

e. Chamber separation requirements.

(1) The chamber separation distance is the shortest distance (rock thickness) between two chambers. Minimum storage chamber separation distances are required to prevent or control the communication of explosions or fires between donor and acceptor chambers. There are three modes by which an explosion or fire can be communicated: by rock spall, by propagation through cracks or fissures, and by airblast or thermal effects traveling through connecting passages.

(2) *Prevention of damage by rock spall (HC/D 1.1 and 1.3).* When an explosion occurs in an underground storage chamber, a shock wave is transmitted through the surrounding rock. The intensity of the shock decreases with distance. For small chamber separation distances, the shock may be strong enough to produce spalling of the rock walls in neighboring chambers. Spalled rock of sufficient energy may damage or initiate a detonation in impacted munitions. When no specific protective construction is used, the minimum chamber separation distance, D_{cd}, required to prevent hazardous spall effects is $D_{cd} = 2.5.W^{1/3}$ and where D_{cd} is in feet and W is in pounds. Under no circumstances may this distance be less than 15 feet.The separation distances defined above apply to chamber loading densities up to 3.0 pounds per cubic foot and moderate to strong rock types. This loading density is the basis for values of D_{cd} listed in Table 5-26. For greater loading densities in moderate to strong rock, the required separation distance is $D_{cd} = 5.0.W^{1/3}$. For weak rock, at all loading densities, the separation distance is $D_{cd} = 3.5.W^{1/3}$.

(3) *Prevention of propagation by rock spall (HC/D 1.1 and 1.3).* If damage to stored munitions in adjacent chambers is considered acceptable by the MACOM, the chamber separation distance can be reduced to the distance required to prevent immediate explosion propagation by the impact of rock spall against the munitions. Propagation by rock spall is considered an immediate mode of propagation because time separations between donor and acceptor explosions may not be sufficient to prevent coalescence of blast waves. Unless analyses or experiments indicate otherwise, explosives weights subject to this mode must be added to other donor explosives weights to determine NEW. When no special protective construction is used, the separation distance, D_{cp}, to prevent propagation by spalled rock is $D_{cp} = 1.5.W^{1/3}$ and where D_{cp} is in feet and W is in pounds. When the acceptor chamber has protective construction to prevent spall and collapse (into the acceptor chamber) the separation distance to prevent propagation by impact of spalled rock is $D_{cp} = 1.5\ W^{1/3}$ where D_{cp} is in feet and W is in pounds. Separation distances, D_{cp} and D_{cd}, are listed in Table 5–26. These distances are based on an explosive loading density of about 17 lb/ft ^{3}. The distances will likely be safety conservative for lower loading densities but the effects have not been quantified.

(4) *Prevention of propagation through cracks and fissures (HDs 1.1 and 1.3).* Propagation between a donor and acceptor chamber has been observed to occur when natural, near horizontal jointing planes, cracks or fissures in the rock between the chambers are opened by the lifting force of the detonation pressure in the donor chamber. Prior to construction of a multi-chamber magazine, a careful site investigation must be made to ensure that such joints or fissures do not extend from one chamber location to an adjacent one. Should such defects be encountered during facility excavation, a reevaluation of the intended siting will be required.

(5) *Prevention of propagation through passageways (HDs 1.1 and 1.3).* Flame and hot gas may cause delayed propagation. Time separations between the original donor event and the potential explosions of this mode will likely be sufficient to prevent coalescence of blast waves. Consequently, for purposes of QD siting, only the maximum credible explosives weight need be used to determine NEW. In order to protect assets, blast and fire resistant doors must be installed within multi-chambered facilities. Evaluations for required chamber separations due to this communication mode should be made on a site specific basis using procedures outlined in Corps of Engineers definitive drawing DEF 421-80-04.

(6) For HDs 1.1 and 1.3 materials, chamber entrances at the ground surface, or entrances to branch tunnels off the same side of a main passageway, shall be separated by at least 15 feet. Entrances to branch tunnels off opposite sides of a main passageway shall be separated by at least twice the width of the main passageway.

(7) Chambers containing only HDs 1.2 and 1.4 material and separated by the minimum distances listed above may

be used to the limits of their physical capacities unless the munitions are subject to special stacking or NEW restrictions.

(8) When HD 1.2 or 1.4 materials are combined in underground storage with HD 1.1 or 1.3 materials, the propellant and explosive content of all items present shall be added to obtain NEW.

f. Chamber cover thickness. The chamber cover thickness is the shortest distance between the natural rock surface at the chamber ceiling (or in some cases, a chamber wall) and the ground surface. The minimum cover thickness (critical cover thickness) required to prevent breaching of the chamber cover by a detonation is $2.5.W^{1/3}$ for all types of rock.

g. External Q-D determinations.

(1) *Hazard division material dependence.*

(a) HDs 1.1 and 1.3 materials. Distances shall be determined based on the total quantity of explosives, propellants, pyrotechnics, and incendiary materials in the individual chambers, unless the total quantity is subdivided to prevent rapid communication of an incident from one subdivision to another (see paragraph 5-2). All HD 1.1 and 1.3 material subject to involvement in a single incident will be assumed to contribute to the explosion yield as would an equal weight of TNT unless significant and validated differences exist in energy release per unit mass of the compositions involved. A connected chamber or cavern storage site containing HD 1.1 or 1.3 material shall be treated as a single chamber site, unless explosion communication is prevented by adequate subdivision or chamber separation.

(b) HD 1.2 materials. Except for primary fragments from openings to underground storage, external explosives safety hazards are not normally significant for HD 1.2 materials. The safe distance for both IBD and PTR is the IBD in Table 5–15 for locations within 10 degrees of the centerline of a tunnel opening. These default criteria apply only to those detonations which occur where a line-of-sight path exists from the detonation point to any portion of the tunnel opening. For detonations which do not have a line-of-sight path to the tunnel opening, or where the line of sight path is intercepted by a barricade beyond the opening, the IBD and PTR hazard distances are zero.

(c) HD 1.4 materials. External explosives safety hazards are not normally significant for HD 1.4 materials. Accordingly, no external Q-D criteria apply.

(2) *Q-D reference points.*

(a) Distances determined by blast or debris issuing from tunnel openings shall be the minimum distance measured from the openings to the nearest point of the location to be protected. Use extended centerlines of the openings as reference lines for directional effects.

(b) Distances determined for airblast and debris produced by breaching of the chamber cover shall be the minimum distance from an exterior point defined by chamber cover thickness, on the ground surface above the storage chamber to the nearest point of the location to be protected. For configurations where the storage chambers are not distinct from the access tunnel, the distance is the shortest distance from the tunnel roof directly above the charge to the surface.

(c) Distances determined for ground shock shall be the minimum distance measured from a point on the perimeter of the storage chamber to the location to be protected.

(3) *Inhabited building distance (HD 1.1 and 1.3 materials).* The inhabited building distance provided shall be the largest of those distances required for protection against ground shock, debris, and airblast as defined below.

(a) Ground shock.

1. For protection of residential buildings against significant structural damage by ground shock, the maximum particle velocity induced in the ground at the building site may not exceed the following values, which form the basis for the equations in paragraph 2, below: 2.4 ips in soil, 4.5 ips in weak rock, 9.0 ips in strong rock.

2. For sitings in moderately-strong to strong rock, with chamber loading densities of 3.0 lbs/ft^3 or less, the IBD for ground shock, D_{ig} is $D_{ig} = 5.8W^{1/3}$, where D_{ig} is in feet and W is the explosive quantity in pounds. For higher loading densities in chambers sited in moderately strong to strong rock, and for all loading densities in other materials, the IBD for ground shock is $D_{ig} = 12.5f_gW^{4/9}$ (moderately strong to strong rock), $D_{ig} = 11.1f_g\ W^{4/9}$ (weak rock), and $D_{ig} = 2.1f_gW^{4/9}$ (soil). Values of D_{ig}/f_g are shown in table 5–27. The dimenssionless, decoupling factor, f_g depends on chamber loading density, w, and is $f_g = (4/15)w^{0.3}$ Values of f_g are shown in table 5–30. Chamber loading density is the NEW (in pounds) divided by the volume of the storage chamber, V_c (in cubic feet). Alternate values for D_{ig} may be used when justified by site specific ground shock data.

(b) Debris.

1. A minimum IBD of 1800 feet for debris throw from an opening shall apply within 10 degrees to either side of the centerline axis of that opening unless positive means are used to prevent or control the debris throw.

2. Distances required for protection of inhabited areas against the effects of debris thrown from breaching of the cover material over a detonation, D_{id} depend on the thickness of the cover, C, over the storage chamber. The possibility of damage from a surface breach need not be considered for chamber cover thicknesses greater than the critical value, C_c , of $2.5W^{1/3}$. If the cover thickness is less than C_c, the distance, D_{id} , will be calculated from $D_{id} = f_d\ f_c\ W^{0.41}$, where $f_d = 0.6w^{0.18}$, and f_c is a constant related to the type of rock around the storage chamber.

3. Values of D_{id}/f_d, for moderately strong to strong rock and for weak rock, are listed in Tables 5–28 and 5–29. Values of f_c are shown graphically in Figure 5–12. Values for the decoupling factors f_g and f_c are listed in Table 5–30.

4. Special features may be incorporated in the design of underground facilities to reduce the IBD for debris ejected

through tunnel openings. Debris Traps are pockets excavated in the rock at or beyond the end of sections of tunnel, designed to catch debris from a storage chamber detonation. Debris traps should be at least 20 percent wider and 10 percent taller than the tunnel leading to the trap, with a depth measured along the shortest wall of at least one tunnel diameter. Expansion chambers are large rooms located between the storage chamber(s) and the tunnel entrance(s), having a cross-section area at least three times as great as that of the largest tunnel intersecting the expansion chamber, and a length that is at least as great as the expansion chamber width. Expansion chambers are very effective in entrapping debris, as long as the tunnels entering and exiting the chambers are either offset in axial alignment by at least two tunnel widths, or enter and exit the chambers in directions that differ by at least 45 degrees. Portal Barricades provide a means of reducing or eliminating debris hazards by obstructing the path of the debris as it exits the tunnel. Construction and location requirements for barricades are contained in paragraph 8–30. High-pressure closures are large blocks constructed of concrete or other materials that can obstruct or greatly reduce the flow of blast effects and debris from an explosion, from or into a storage chamber. For chamber loading densities of 0.6lb/ft^3 (10 kg/m^3) or above, closure blocks will contain 40 percent or more of the explosion debris within the detonation chamber, provided that the block is designed to remain intact. If a closure block fails under the blast load, it will produce a volume of debris in addition to that from the chamber itself. However, since the block's mass and inertia are sufficient to greatly reduce the velocity of the primary debris, the effectiveness of other debris-mitigating features, such as debris traps, expansion chambers, and barricades is increased. Debris traps, and expansion chambers intended to entrap debris, must be designed to contain the full potential volume of debris, based on the maximum capacity of the largest storage chamber. Design specifications for debris traps, expansion chambers, closure blocks and portal barricades are given in Corps of Engineers definitive drawing number DEF 421-80-04. Use of a portal barricade in conjunction with any other of the other protective features listed above will lower the debris hazard to a level where Q-D considerations for debris will not be required.

(c) Airblast.

1. An explosion in an underground storage chamber may produce external airblast from two sources; the exit of blast from existing openings (tunnel entrances, ventilation shafts, etc.) and the rupture or breach of the chamber cover by the detonation. Required inhabited building distances are to be independently determined for each of these airblast sources, with the maximum IBD used for siting. If the chamber cover thickness is less than the critical thickness, C_c, some amount of external airblast will be produced, depending on the cover thickness. Use the following procedure to find IBD for airblast produced by breaching of the chamber cover: if $C < 0.25W^{1/3}$ use distance in Table 5–1 (Note 3); if $0.25W^{1/3} < C < 0.50W^{1/3}$, use 1/2 of applicable K40-K50 distance if $0.50W^{1/3} < C < 0.75W^{1/3}$, use 1\4 of applicable K40-K50 distance; and if $0.75W^{1/3} < C$, airblast hazards from blast through the earth cover are negligible relative to ground shock or debris hazards.

2. Overpressure and debris hazards must be determined for each facility opening whose cross-section area is five percent or more of that of the largest opening. Calculated overpressures should be reduced by 12 percent when two or more openings of similar cross-sectional area exist.

3. Distance vs overpressure along the centerline axis of a single opening is $R = 149.3D[(W/VE)^{0.5}/p_{so}]^{1/1.4}$, where R = distance from opening (feet) (Comment: Use the minimum, robust cross-sectional area within five tunnel diameters of the opening to compute the effective hydraulic diameter D: effective hydraulic diameter that controls dynamic flow issuing from the opening (feet); compute D, using the minimum, robust cross-sectional area that is located within five tunnel diameters of the opening, as D = 4A/P, where A is the cross-section and P is the perimeter), p_{so} = overpressure at distance R, in psi, W = maximum credible event (MCE), in pounds, and VE = total volume engulfed by the blast wavefront within the tunnel system at the time the wavefront arrives at the point of interest, in ft^3.

4. Distance vs overpressure off the centerline axis of the opening is $R(s) = R(s=0)/(1 + (s/56)^2)^{1/1.4}$, where R(s=0) = the distance along the centerline axis and s = the horizontal angle from the centerline (degrees).

5. The above equations show that the distance providing protection from an overpressure exceeding P_{so} depends on the hydraulic diameter, and the angle from centerline axis for the location of interest. Figure 5–11 shows the ratio of off-axis to on-axis distances.

6. Find required IBD for airblast using the appropriate equations discussed above, with the criteria that the total incident overpressure at IBD shall not exceed P^{so} = 1.2 psi for W < 100,000 lbs, $P_{so} = 44.57W^{0.314}$ psi for 100,000 < W < 250,000 lbs, and P^{so} = 0.9 psi for W > 250,000 lbs. For these overpressures, on-axis IBDs are $R = 131.1D(W/V_E)^{1/2.8}$ for W < 100,000 lbs, $R = 9.91DW^{0.581}/V_E^{0.357}$ for 100,000 < W < 250,000 lbs, and $R = 161.0D(W/V_E)^{1/2.8}$ for W > 250,000 lbs. Distances for IBD airblast protection may be determined from the equations listed above or from entries in tables 5–32 and 5–33.

(d) Airblast mitigation methods for reducing IBD. Special features that may be incorporated in underground storage facilities to reduce the airblast IBD include:

1. Facility layouts. A single-chamber facility with a straight access tunnel leading from the chamber to the portal is commonly called a "shotgun" magazine because the blast and debris are channeled to the external area as if fired from a long-barreled gun. More complex facility layouts will provide some reductions in the exit pressures due to reflections of the explosive shock against the tunnel walls. The desired cumulative effect is to reduce the overpressure at the shock front to the point that the peak overpressure is produced by the detonation gas flow following the front. The detonation gas pressure decreases as the volume it occupies increases. Therefore, the peak overpressure produced at the tunnel

opening will also decrease with an increase in the total volume of the tunnels and chambers that can be filled by the blast as it travels from the detonation source (e.g., a storage chamber) to the opening, as given in the previous section. Larger facilities will, therefore, produce greater reductions in the effective overpressure at the opening, which will, in turn, reduce the IBD. The IBD should be reduced by 10 percent when two or more openings of similar cross-sectional area exist.

2. Expansion chambers. Expansion chambers are so-named because of the volume they provide for the expansion of the detonation gasses behind the shock front as it enters the chamber from a connecting tunnel. Some additional degradation of the peak pressure at the shock front occurs as the front expands into the chamber and reflects from the walls. The principal benefit provided by an expansion chamber, however, is simply the added volume which decreases pressures. Expansion chambers also have practical purposes. They may be used as loading/unloading chambers, providing weather protection for the transfer of munitions from trucks to materials handling equipment prior to placement in storage chambers, or as turn-around areas for transport vehicles servicing facilities through a single entry passage.

3. Constrictions. Constrictions are short lengths of tunnel whose cross sectional areas are reduced to one-half or less of the normal tunnel cross section. The use of constrictions should be limited to locations within 5 tunnel diameters of the tunnel exit or to the entrances of storage chambers. A constriction near the tunnel exit, where the overpressure has dropped near a minimum value in the tunnel, defines the hydraulic diameter to be used in calculating airblast IBD. The purpose of a constriction at a chamber entrance is to reduce the intrusion of airblast and thermal effects into the chamber from a detonation in an adjacent chamber. A constricted chamber entrance also reduces the area, and hence the total loading on a blast door installed to protect the chamber contents.

4. Portal barricades. For most underground storage facilities, the airblast from a storage chamber detonation that exits a portal will be in the form of a shock wave. A barricade in front of the portal will reflect that portion of the shock wave moving directly outward from the portal, reducing pressures along the extended tunnel axis and increasing the pressures in the opposite direction, behind the portal. The result is a more circular IBD area centered at the portal. Since much of the blast is also reflected upward, the total IBD area is less than would occur without a barricade. For cases where the blast must travel a large distance from the storage chamber to the portal, with several changes in direction along its path, the airblast exiting the portal may primarily consist of a strong, highly-directional gas flow. A barricade can deflect such a flow up to 90 degrees from the tunnel axis. Whether the blast exiting the portal is shock or gas flow-dominated, the barricade must be located within certain minimum and maximum standoff distances to be effective. Location and construction requirements for portal barricades are described in Corps of Engineers definitive drawing number DEF 421-80-04. Portal barricades reduce IBD along the extended tunnel axis by 50 percent. The total IBD area is only slightly reduced, but will change to a circular area, half of which is behind the portal.

5. High-pressure closures. High-pressure closures are large blocks constructed of concrete or other material that can obstruct or greatly reduce the flow of blast effects and debris from an explosion, from or into a storage chamber. If used to provide complete protection to the contents of a chamber from an explosion in another chamber, the block must be designed to move from a normally-closed position to an open position to allow entry into the chamber. Blast doors are not required for this type of closure block. If used to reduce Q-D by restricting the blast outflow from a chamber, the block must be designed to be rapidly driven from an open to a closed position by the detonation pressures in the chamber. While this type of block will provide some protection of chamber contents from an explosion in another chamber, blast doors must also be used to provide complete protection. Tests have shown that a closure block with sufficient mass can obstruct the initial outflow of airblast from an explosion in a chamber to reduce pressures in the connecting tunnels by a factor of two or more, even when the block is destroyed. Blocks with sufficient strength to remain structurally intact can provide greater reductions. Since many variables influence the performance of a closing device, their design details must be developed on a site-specific basis. A 50% reduction in IBD should be applied to a high-pressure closure block provided that the block is designed to remain intact in the event of an explosion. This reduction is applicable for loading densities of 0.625 lb/ft^3 or higher. For loading densities lower than 0.625 lb/ft^3, reductions may be calculated by the formula $y(\%) = 50\log_{10}(16.02w)$, where y = the percent reduction in IBD and w = loading density in lb/ft^3 . Closure block design criteria are found in Corps of Engineers definitive design drawing number DEF 421-80-04.

(4) *Public traffic route (PTR) distance (HD 1.1 and 1.3 materials).*

(a) Ground shock. Q-D is 60 percent of IBD for ground shock.

(b) Debris. Q-D is 60 percent of IBD for debris.

(c) Airblast. Q-D is 60 percent of IBD for airblast.

(5) *Intraline distance (HD 1.1 and 1.3 materials).*

(a) Ground shock. Q-D criteria for ground shock do not apply.

(b) Debris. For locations within 10 degrees of the centerline of a tunnel opening, site intraline facilities at IBD for

debris issuing from the opening, calculated as directed in paragraph 5-13.g.(3)(b), above. Q-D criteria for debris are not applicable for locations greater than 10 degrees from the centerline axis of an opening.

(c) Airblast. Overpressure at barricaded and unbarricaded intraline distances shall not exceed 12 and 3.5 psi, respectively.

(6) *Distance to aboveground magazines (hazard divisions 1.1 and 1.3 materials).*

(a) Ground shock. Q-D criteria for ground shock do not apply.

(b) Debris. Q-D criteria for surface debris do not apply. For locations within 10 degrees of the centerline of an opening, site aboveground magazines at IBD for debris issuing from the opening calculated as directed in paragraph 5–13g(3)(b), above.

(c) Airblast. Overpressure at barricaded and unbarricaded aboveground magazine distance shall not exceed 27 and 8 psi, respectively.

(7) *Distance to earth-covered aboveground magazines (hazard divisions 1.1 and 1.3 materials).*

(a) Ground shock. Q-D criteria for ground shock do not apply.

(b) Debris. Q-D criteria for surface debris do not apply. Q-D criteria for debris issuing from an opening do not apply if the magazine is oriented for side-on or rear-on exposures to the debris. Site earth-covered magazines that are located within 10 degrees of the centerline of an opening and oriented for a frontal debris exposure at IBD for that debris hazard calculated as directed in paragraph 5-13g(3)(b), above.

(c) Airblast. These sitings are based on the strength of the ECM under consideration and utilize side-on overpressures calculated from Equations 9–8a and 9–8b.

1. Head-on exposure. 7-Bar ECM: Site where the side-on overpressure, p_{so}, is 29 psi.

2. 3-Bar ECM: Site where the side-on overpressure, p_{so}, is 16 psi. Undefined ECM: Site where the side-on overpressure, p_{so}, is 3.5 psi.

3. Other than Head-on Exposure. Site all ECMs where side-on overpressure, p_{so}, is 45 psi.

Table 5–10
Impulse noise protection decision table

Type of equipment available	Applicable tables and figures
No equipment available	Use table 5–11, then table 5–13.
Equipment (such as a sound meter) is available to measure peak noise pressure. Peak noise pressure is expressed in decibels (db) but may be measured in any unit (psi, pascals, and so forth) and converted to db (see MIL STD 1474).	Use table 5–12, then figure 5–1, then table 5–13.
Equipment is available to measure both peak noise pressure and the B-duration of the pressure.	Use figure 5–1, then table 5–13.

Notes:
Of the three methods above, the last method is best because it is the most precise and least conservative.

Table 5–11
Impulse noise zones measured in feet from intentional detonations

NEW	Prohibited zone	Z zone	Y zone	X zone	W zone
1 oz	0	14	25	42	230
2 oz	0	18	31	53	290
3 oz	0	20	35	61	332
4 oz	0	22	39	67	365
5 oz	0	24	42	72	394
6 oz	0	25	45	76	418
7 oz	0	27	47	80	440
8 oz	0	28	49	84	460
9 oz	0	29	51	88	479
10 oz	0	30	53	91	496
11 oz	0	31	55	94	512
12 oz	0	32	56	96	527
13 oz	0	33	58	99	541
14 oz	0	33	59	101	555
15 oz	0	34	61	104	568
1 lb	0	35	62	106	580
2 lb	0	44	78	134	731
3 lb	0	50	89	153	837
4 lb	0	56	98	168	921
5 lb	0	60	106	181	992

Table 5–11
Impulse noise zones measured in feet from intentional detonations—Continued

NEW	Prohibited zone	Z zone	Y zone	X zone	W zone
6 lb	0	64	113	193	1054
7 lb	0	67	119	203	1110
8 lb	0	70	124	212	1160
9 lb	0	73	129	220	1206
10 lb	0	75	134	228	1250
15 lb	0	89	153	261	1430
20 lb	0	95	168	288	1570
25 lb	0	102	181	310	1696
30 lb	0	109	193	329	1802
35 lb	0	114	203	347	1897
40 lb	0	120	212	363	1984
45 lb	0	124	221	377	2063
50 lb	0	129	228	391	2137
60 lb	0	137	243	415	2271
70 lb	0	144	256	437	2390
80 lb	0	151	267	457	2499
90 lb	0	157	278	475	2599
100 lb	0	162	288	492	2692
150 lb	0	186	329	563	3082
200 lb	0	205	363	620	3392
250 lb	0	220	391	668	3654
300 lb	0	234	415	710	3883
350 lb	0	247	437	747	4087
400 lb	0	258	457	781	4273
450 lb	0	268	475	812	4445
500 lb	0	278	492	841	5603
600 lb	0	295	523	894	4892
700 lb	0	311	551	941	5150
800 lb	0	325	576	984	5384
900 lb	0	338	599	1023	5600
1000 lb	0	350	620	1060	5800
2000 lb	0	441	781	1336	7308
3000 lb	0	505	894	1529	8365
4000 lb	0	556	984	1683	9207
5000 lb	0	598	1060	1813	9918
6000 lb	0	639	2217	1926	10539
7000 lb	0	670	1186	2028	11095
8000 lb	0	700	1240	2120	11600
9000 lb	0	728	1290	2205	12064
10000 lb	0	754	1336	2284	12496

Notes:

[1] This table provides impulse noise zones for use with table 5–13.

[2] Use this table only if unable to measure the actual noise pressure (in db) from the intentional detonation. This table is very conservative. It does not consider the effects of terrain, earth cover, buildings, trees, and so forth in reducing noise and overpressure. This table also assumes a 'worst case' impulse noise B-duration, the effect of which is to further increase required distances. For this reason, actual measurement of noise pressure is preferred.

[3] To read the table, using a NEW of 1 oz as an example, assume the Prohibited Zone is from 0 ft up to (but not including) 14 ft. Unless protected from blast, personnel are not allowed here due to possibile non-auditory injury. The Z zone is from 14 ft up to (but not including) 25 ft. The Y zone is from 25 ft up to (but not including) 42 ft. The X zone is from 42 ft up to (but not including) 230 ft. The W zone is from 230 ft and beyond. After reading this table, go to table 5–13 to determine protection.

Table 5–12
Impulse noise B-duration (estimated for various NEWs and distances)

NEW	Distance (feet)	B-duration (msec)	Distance (feet)	B-duration (msec)	Distance (feet)	B-duration (msec)	Distance (feet)	B duration (msec)
1 oz	4	3	8	4	12	4	16	4
2 oz	5	4	10	5	15	5	20	6
3 oz	6	4	11	5	17	6	23	6
4 oz	6	4	13	6	19	6	25	7
5 oz	7	5	14	6	20	7	27	8
6 oz	7	5	14	6	22	7	29	8
7 oz	8	5	15	7	23	8	30	8
8 oz	8	6	16	7	24	8	32	9
9 oz	8	6	17	7	25	8	33	9
10 oz	9	6	17	8	26	9	34	9
11 oz	9	6	18	8	26	9	35	10
12 oz	9	6	18	8	27	9	36	10

Table 5–12
Impulse noise B-duration (estimated for various NEWs and distances)—Continued

NEW	Distance (feet)	B-duration (msec)	Distance (feet)	B-duration (msec)	Distance (feet)	B-duration (msec)	Distance (feet)	B duration (msec)
13 oz	9	7	19	8	28	10	37	10
14 oz	10	7	19	9	29	10	38	11
15 oz	10	7	20	9	29	10	39	11
1 lb	10	7	20	9	30	10	40	11
2 lb	13	9	25	11	38	13	50	14
3 lb	14	10	29	13	43	15	58	16
4 lb	16	11	32	14	48	16	63	18
5 lb	17	12	34	15	51	17	68	19
6 lb	18	13	36	16	55	19	73	20
7 lb	19	13	38	17	57	20	77	21
8 lb	20	14	40	18	60	20	80	22
9 lb	21	15	42	19	62	21	83	23
10 lb	22	15	43	19	65	22	86	24
15 lb	25	17	49	22	74	25	99	27
20 lb	27	19	54	24	81	28	109	30
25 lb	29	21	58	26	88	30	117	32
30 lb	31	22	62	28	93	32	124	34
35 lb	33	23	65	29	98	33	131	36
40 lb	34	24	68	31	103	35	137	38
45 lb	36	25	71	32	107	36	142	39
50 lb	37	26	74	33	111	38	147	41
60 lb	39	28	78	35	117	40	157	43
70 lb	41	29	82	37	124	42	165	46
80 lb	43	30	86	39	129	44	172	48
90 lb	45	32	90	40	134	46	179	50
100 lb	46	33	93	42	139	47	186	51
150 lb	53	37	106	48	159	54	212	59
200 lb	58	41	117	53	175	60	234	65
250 lb	63	44	126	57	189	64	252	70
300 lb	67	47	134	60	201	68	268	74
350 lb	70	50	141	63	211	72	282	78
400 lb	74	52	147	66	221	75	295	82
450 lb	77	54	153	69	230	78	306	85
500 lb	79	56	159	71	238	81	317	88
600 lb	84	59	169	76	253	86	337	94
700 lb	89	63	178	80	266	91	355	98
800 lb	93	65	186	84	278	95	371	103
900 lb	97	68	193	87	290	98	386	107
1000 lb	100	70	200	90	300	102	400	111
2000 lb	126	89	252	113	378	128	504	140
3000 lb	144	102	288	130	433	147	577	160
4000 lb	159	112	317	143	476	162	635	176
5000 lb	171	120	342	154	513	174	684	190
6000 lb	182	128	363	164	545	184	727	201
7000 lb	191	135	382	172	574	195	765	212
8000 lb	200	141	400	180	600	204	800	222
9000 lb	208	146	416	187	624	212	832	231
1000 lb	215	152	431	194	646	220	862	239
1 oz	20	5	24	5	28	5	32	5
2 oz	25	6	30	6	35	6	40	7
3 oz	29	7	34	7	40	7	46	8
4 oz	31	7	38	8	44	8	50	8
5 oz	34	8	41	8	48	9	54	9
6 oz	36	9	43	9	50	9	58	10
7 oz	38	9	46	9	53	10	61	10
8 oz	40	9	48	10	56	10	63	11
9 oz	41	10	50	10	58	11	66	11
10 oz	43	10	5l	11	60	11	68	11
11 oz	44	10	53	11	62	11	71	12
12 oz	45	11	55	11	64	12	73	12
13 oz	47	11	56	12	65	12	75	12
14 oz	48	11	57	12	67	12	77	13
15 oz	49	12	59	12	69	13	78	13
1 lb	50	12	60	12	70	13	80	13
2 lb	63	15	76	16	88	16	101	17
3 lb	72	17	87	18	101	19	115	19
4 lb	79	19	95	20	111	21	127	21
5 lb	85	20	103	21	120	22	137	23
6 lb	91	21	109	23	127	24	145	24
7 lb	96	23	115	24	134	25	153	26

Table 5–12
Impulse noise B-duration (estimated for various NEWs and distances)—Continued

NEW	Distance (feet)	B-duration (msec)	Distance (feet)	B-duration (msec)	Distance (feet)	B-duration (msec)	Distance (feet)	B duration (msec)
8 lb	100	24	120	25	140	26	160	27
9 lb	104	25	125	26	146	27	166	28
10 lb	108	25	129	27	151	28	172	29
15 lb	123	29	148	31	173	32	197	33
20 lb	136	32	163	34	190	35	217	36
25 lb	146	35	175	46	205	38	234	39
30 lb	155	37	186	39	217	40	249	42
35 lb	164	39	196	41	229	42	62	44
40 lb	171	40	205	43	239	44	274	46
45 lb	178	42	213	44	249	46	285	48
50 lb	184	44	221	46	258	48	295	49
60 lb	196	46	235	49	274	51	313	52
70 lb	206	49	247	51	288	53	330	55
80 lb	215	5l	258	54	302	56	345	58
90 lb	224	53	269	56	314	58	358	60
100 lb	232	55	278	58	325	60	371	62
150 lb	266	63	319	66	572	69	425	71
200 lb	292	69	351	73	409	76	468	78
250 lb	315	74	378	78	441	82	504	84
300 lb	335	79	402	83	469	87	535	90
350 lb	352	83	423	88	493	91	564	94
400 lb	268	87	442	92	516	95	589	99
450 lb	383	91	460	95	536	99	613	103
500 lb	397	94	476	99	555	103	635	106
600 lb	422	100	506	105	590	109	75	113
700 lb	444	105	533	110	621	115	710	119
800 lb	464	110	557	115	650	120	742	124
900 lb	483	114	579	120	676	123	772	129
1000 lb	500	118	600	124	700	130	800	134
2000 lb	630	149	756	157	882	163	1008	169
3000 lb	721	171	865	179	1009	187	1153	93
4000 lb	793	188	952	197	1111	206	1270	213
5000 lb	855	202	1026	213	1197	221	1368	229
6000 lb	908	215	1090	226	1272	235	1453	243
7000 lb	956	226	1147	238	1339	248	1530	256
8000 lb	1000	236	1200	249	1400	259	1600	268
9000 lb	1040	246	124S	259	1456	269	1664	279
10000	1077	255	1292	268	1508	279	1723	288
1 oz	36	5	40	6	44	6		
2 oz	45	7	50	7	55	7		
3 oz	52	8	57	8	63	8		
4 oz	57	9	63	9	69	9		
5 oz	61	9	68	10	75	10		
6 oz	65	10	72	10	79	10		
7 oz	68	10	76	11	84	11		
8 oz	71	11	79	11	87	12		
9 oz	74	11	83	12	91	12		
10 oz	77	12	86	12	94	12		
11 oz	79	12	88	13	97	13		
12 oz	82	13	91	13	100	13		
13 oz	84	13	93	13	103	14		
14 oz	86	13	96	14	105	14		
15 oz	88	13	98	14	108	14		
1 lb	90	14	100	14	110	l5		
2 lb	113	17	126	18	139	18		
3 lb	130	20	144	20	159	21		
4 lb	143	22	159	23	175	23		
5 lb	154	24	171	24	188	25		
6 lb	164	25	192	26	200	26		
7 lb	172	26	191	27	210	28		
8 lb	180	28	200	28	220	29		
9 lb	187	29	208	29	229	30		
10 lb	194	30	215	31	237	31		
15 lb	222	34	247	35	271	36		
20 lb	244	37	271	38	299	39		
25 lb	263	40	292	41	322	43		
30 lb	280	43	311	44	342	45		
35 lb	294	45	327	46	360	48		
40 lb	308	47	342	48	376	50		
45 lb	320	49	356	50	391	52		

Table 5–12
Impulse noise B-duration (estimated for various NEWs and distances)—Continued

NEW	Distance (feet)	B-duration (msec)	Distance (feet)	B-duration (msec)	Distance (feet)	B-duration (msec)	Distance (feet)	B duration (msec)
50 lb	332	5l	368	52	405	54		
60 lb	352	54	391	55	431	57		
70 lb	371	57	412	58	453	60		
80 lb	388	59	431	61	474	63		
90 lb	403	62	448	64	493	65		
100 lb	418	64	464	66	510	68		
150 lb	478	73	531	75	584	77		
200 lb	526	81	585	83	643	85		
250 lb	567	87	630	89	693	92		
300 lb	602	92	669	95	736	97		
350 lb	634	97	705	100	775	103		
400 lb	663	102	737	104	810	107		
450 lb	690	106	766	109	843	111		
500 lb	714	109	794	113	873	115		
600 lb	759	116	843	120	928	123		
700 lb	799	122	888	126	976	129		
800 lb	835	128	928	132	1021	135		
900 lb	869	133	965	137	1062	140		
1000 lb	900	138	1000	142	1100	145		
2000 lb	1134	174	1260	179	1386	183		
3000 lb	1298	199	1442	204	1586	210		
4000 lb	1428	219	1587	225	1746	231		
5000 lb	1539	236	1709	242	1880	249		
6000 lb	1635	250	1817	258	1998	264		
7000 lb	1721	264	1912	271	2104	278		
8000 lb	1799	276	1999	283	2199	291		
9000 lb	1872	287	2079	295	2287	303		
10000 lb	1938	297	2154	305	2369	313		

Notes:

[1] Use table 5–12 to measure the peak impulse noise in decibels (a sound meter is all that is required). After measuring the peak impulse noise, estimate the impulse noise B-duration using this table. Then go to figure 5–2 and find the impulse noise zone. From there, go to table 5–13 to determine the protection required.

[2] To read table 5–12, if the NEW is 1 oz and personnel are 4 feet away, what is the B-duration? Answer: The B-duration is 3 milliseconds (msec). If the NEW is 1 oz and personnel are 167 feet away, what is the B-duration? Answer: 17 feet lies between 167 feet (4 msec) and 20 feet (5 msec). To be conservative, choose the larger value: 5 msec. Linear interpolation between table values is not permitted. The answer, then, is 5 msec.

[3] "B-duration" is defined as the total time in milliseconds for the noise pressure to rise to a peak and then fall back. Any significant fluctuations after the initial rise and fall are also included in B-duration. To the human ear, all one hears is a single sound; specialized equipment is required to measure the sound wave to determine its Induration. Procedures to calculate impulse noise s-duration from measured sound waves are in MIL STD 1474.

[4] It is best to determine B-duration from measured sound waves in accordance with MIL STD 1474 instead of estimating it using this table. This table conservatively estimates B-duration to account for unknown conditions, such as reflecting surfaces, which can lengthen B duration.

[5] The B-duration values in this table were derived by computing the duration of the positive portion of the overpressure wave per TM 5–1300. This duration was then tripled to conservatively account for follow-on fluctuations caused by reflections from walls, roofs, etc.

Table 5–13
Impulse noise zones and required protections with maximum permissable number of detonations per day

Impulse noise zone	No protection	Either ear plugs or ear muffs	Both ear plugs and ear muffs
W zone[1]	Unlimited exposures	Unlimited exposures	Unlimited exposures
X zone	0	2000	40000
Y zone	0	100	2000
Z zone	0	5	100
Prohibited zone[2]	No personnel allowed	No personnel allowed	No personnel allowed

Notes:

[1] The W zone is the zone where noise levels are 140 decibels (db) or lower. One hundred forty decibels is the maximum impulse noise level allowed by Mil Std 1474 for personnel not wearing hearing protection. It should be noted that 140 db presents a high risk of complaints from the public. One hundred fifteen decibels is the generally accepted threshold for noise complaints.

[2] Unless protected from blast so that pressure levels are reduced to the W, X, Y, or Z zones, no personnel are allowed in the prohibited zone because of possible non-auditory injury.

Table 5–14
Q-D for unprotected aboveground service tanks supporting explosives storage or operating complexes

NEW Over	Not over	Distance
0	1,000	D = 400 feet
1,000	30,000	D = $40W^{1/3}$
30,000	100,000	D = $40W^{1/3}$ or use table 5–1, column 5
100,000	250,000	D = $2.42W^{0.577}$ or use table 5–1, column 5
250,000	500,000	D = $50W^{1/3}$ or use table 5–1, column 5

Table 5–15
HD 1.2 distances

Category	IBD (ft)	PTR distance (ft)	IL distance (ft)	Aboveground magazine distance[3] (ft)	Magazine limit[2] (lbs)
(02)1.2	200[4]	120	100	100	No limit
(03)1.2	300[4]	180	108	150	No limit
(04)1.2	400[4]	240	144	200	No limit
(05)1.2	500	300	180[1]	200	No limit
(06)1.2	600	360	216[1]	200	No limit
(07)1.2	700	420	252[1]	200	No limit
(08)1.2	800	480	288[1]	300	No limit
(09)1.2	900	540	324[1]	300	500,000[2]
(10)1.2	1000	600	360[1]	300	500,000[2]
(11)1.2	1100	660	396[1]	300	500,000[2]
(12)1.2	1200	720	432[1]	300	500,000[2]
(13)1.2	1300	780	468[1]	300	500,000[2]
(14)1.2	1400	840	504[1]	300	500,000[2]
(15)1.2	1500	900	540[1]	300	500,000[2]
(16)1.2	1600	960	576[1]	300	500,000[2]
(17)1.2	1700	1020	612[1]	300	500,000[2]
(18)1.2	1800	1080	648[1]	300	500,000[2]

Notes:

[1] If the HE in the items at an operating line PES is limited to 5,000 pounds, intraline distance may be reduced to 200 feet.

[2] The 500,000 pound limit applies only to aboveground magazines. See note 3 below for earth-covered magazine limits.

[3] This column provides magazine distances between above ground magazines. Other distances are as follows:

Between earth-covered magazines: Earth-covered magazines of any size, of standard or non-standard construction, and mutually sited on the basis of at least 100 lb of HD 1.1 may be used to physical capacity.

From the earth-covered magazines containing HD 1.2 to an above ground magazine, above ground magazine distance separation is required. If this minimum distance is met, the earth-covered magazine may be used to physical capacity.

From an above ground magazine containing HD 1.2 to an earth-covered magazine, a 50-ft minimum separation is required. If this minimum distance is met, the above ground magazine may be loaded to the limit shown in the table.

[4] See paragraph 5–1b information on storage of limited quantities of these HDs without regard to QD.

[5] See appendix I for QD requirements for 1.2 ammunition evaluated under revised criteria.

Table 5–16
HD 1.3 QD

New in pounds	IBD/PTR[5] in feet	Above-ground mag[7] /IL[6]
1,000[1]	75	50
2,000	86	57
3,000	96	63
4,000	106	69
5,000	115	75
6,000	123	81
7,000	130	86
8,000	137	91
9,000	144	96
10 000	150	100
12,000	159	105
14,000	168	111
16,000	176	116
18,000	183	120
20,000	190	125
22,000	195	130
24,000	201	134
26,000	206	138
28,000	210	142
30,000	215	145
32,000	219	147
34,000	224	149
36,000	228	151
38,000	231	153
40,000	235	155
42,000	238	157
44,000	242	159
46,000	245	161
48,000	247	163
50,000	250	165
52,000	252	167
54,000	254	169
60,000	260	175
62,000	262	177
64,000	264	180
66,000	266	182
68,000	268	183
70,000	270	185
72,000	272	186
74,000	274	187
76,000	276	188
78,000	278	189
80,000	280	190
82,000	284	191
84,000	287	192
86,000	290	193
88,000	293	194
90,000	295	195
92,000	296	196
94,000	297	197
96,000	298	198
98,000	299	199
100,000	300	200
110,000	307	205
120,000	315	210
130,000	322	215
140,000	330	220
150,000	337	225
160,000	345	230
170,000	352	235
180,000	360	240
190,000	367	245
200,000	375	250
210,000	383	255
220,000	390	260
230,000	398	265
240,000	405	270
250,000	413	275
260,000	420	280

Table 5–16
HD 1.3 QD—Continued

New in pounds	IBD/PTR[5] in feet	Above-ground mag[7] /IL[6]
270,000	428	285
280,000	435	290
290,000	443	295
300,000	450	300
310,000	458	305
320,000	465	310
330,000	473	315
340,000	480	320
350,000	488	325
360,000	495	330
370,000	503	335
380,000	510	340
390,000	518	345
400,000	525	350
410,000	533	355
420,000	541	361
430,000	549	366
440,000	556	371
450,000	564	376
460,000	571	381
470,000	579	385
480,000	586	391
490,000	593	395
500,000	600	400
510,000	605	402
520,000	609	404
530,000	614	407
540,000	618	409
550,000	623	411
560,000	627	413
570,000	632	415
580,000	636	418
590,000	641	420
600,000	645	422
610,000	649	424
620,000	654	426
630,000	658	428
640,000	662	430
650,000	667	432
660,000	671	435
670,000	675	437
680,000	679	439
690,000	684	441
700,000	688	443
710,000	692	445
720,000	696	447
730,000	700	449
740,000	704	451
750,000	708	453
760,000	712	455
770,000	716	457
780,000	720	459
790,000	724	461
800,000	728	463
810,000	732	465
820,000	735	467
830,000	739	469
840,000	743	471
850,000	747	472
860,000	750	474
870,000	754	476
880,000	75S	47S
890,000	761	480
900,000	765	482
910,000	769	484
920,000	772	486
930,000	776	487
940,000	779	489
950,000	783	491
960,000	786	493
970,000	790	495

Table 5–16
HD 1.3 QD—Continued

New in pounds	IBD/PTR[5] in feet	Above-ground mag[7] /IL[6]
980,000	793	496
990,000	797	498
1,000,000	800	500

Notes:

[1] For quantities less than 1,000 pounds the required distances are those specified for 1,000 pounds. The use of lesser distance may be approved when supported by test data and/or analysis.

[2] Linear interpolation of NEW quantities between table entries is permitted.

[3] For quantities above 1,000,000 pounds, the values given above will be extrapolated by means of the formulas:

a. For IBD/PTR: $D = 8W^{1/3}$.

b. For aboveground mag/IL: $D = 5W^{1/3}$.

[4] See para 5–1b for storage of limited quantities of items in this class without regard to QD and compatibility.

[5] The same distances are used for IBD and PTR.

[6] The same distances are used for aboveground magazines and intraline distance.

[7] This column provides magazine distances between aboveground magazines. Other distances are as follows:

Between earth-covered magazines: Earth-covered magazines of any size, of standard or non-standard construction, and mutually sited on the basis of at least 100 lb of HD 1.1 may be used to physical capacity.

From the earth-covered magazines containing HD 1.3 to an aboveground magazine: Aboveground magazine distance separation is required.

From an aboveground magazine containing HD 1.3 to an earth-covered magazine: A 50 ft minimum separation is required. If this minimum distance is met, the aboveground magazine may be loaded to physical capacity.

Table 5–17
HC/D 1.4 quantity-distance

NEW	Inhabited building distance	Public traffic route distance	Magazine distance [1,3]		
			Intraline	Aboveground	Earthcovered
Limited quantities[2] Larger quantities: no limit specifically required for safety reasons	100	100	50 (100 if combustible construction)	50 (100 if combustible construction)	No specified separation requirement

Notes:

[1] With reasonable care in storage, HC/D 1.4 items may be stored in any weatherproof warehouse in warehouse area for general supplies provided such warehouse is separated from all other warehouses by at least the aboveground magazine separation distance specified.

[2] See paragraph 5–1 for storage of mission essential or operationally necessary quantities without regard to Q-D.

[3] Magazines storing only Class/Division 1.4 items may be located 50 feet (100 feet if combustible construction) from all other magazines or explosives operation locations regardless of the class/division or quantity of explosives authorized in these adjacent structures. Because loss of the Class/Division 1.4 stocks is expected if an the adjacent structure explodes, application of this provision must be accepted by the MACOM on a case-by-case basis. Consideration shall be given to the impact of loss on stockage levels, readiness, and sustainment.

Table 5–18
QD criteria for HD 1.6 ammunition

NEW (lbs)	IBD or PTR (ft)[3,4]	Above ground IMD or ILD (ft)[1,3,4]	New (lbs)	IBD or PTR (ft)[3,4]	Above ground IMD or ILD (ft)[1,3,4]
100[2]	37	23	180000	452	282
200	47	29	190000	460	287
300	54	33	200000	468	292
400	59	37	225000	487	304
500	64	40	250000	504	315
600	67	42	275000	520	325
700	71	44	300000	536	334
800	74	46	325000	550	344
900	77	48	350000	564	352
1000	80	50	375000	577	361
2000	101	63	400000	589	368
3000	115	72	425000	601	376
4000	127	79	450000	613	383
5000	137	86	475000	624	390
6000	145	91	500000	635	397
7000	153	96			

Table 5–18
QD criteria for HD 1.6 ammunition—Continued

NEW (lbs)	IBD or PTR (ft)[3,4]	Above ground IMD or ILD (ft)[1,3,4]	New (lbs)	IBD or PTR (ft)[3,4]	Above ground IMD or ILD (ft)[1,3,4]
8000	160	100			
9000	166	104			
10000	172	108			
15000	197	123			
20000	217	136			
25000	234	146			
30000	249	155			
35000	262	164			
40000	274	171			
45000	285	176			
50000	295	184			
55000	304	190			
60000	313	196			
65000	322	201			
70000	330	206			
75000	337	211			
80000	345	215			
85000	352	220			
90000	359	224			
95000	365	228			
100000	371	232			
110000	383	240			
120000	395	247			
125000	400	250			
130000	405	253			
140000	415	260			
150000	425	266			
160000	434	271			
170000	443	277			
175000	447	280			

Notes:

[1] The same distances are used for aboveground intermagazine distances (IMD) and intraline distances (ILD). Earthcovered magazines may be used to their physical capacity for this division, provided they comply with the construction and siting requirements of chapters 5 and 8 for HD 1.1.

[2] For quantities less than 100 lbs, the required distances are those specified for 100 lbs. The use of lesser distances may be approved when supported by test data and/or analysis.

[3] Interpolation is permitted. For IBD and PTR, use $D = 8W^{1/3}$. For aboveground IMD and ILD, use $D = 5W^{1/3}$.

[4] For IBD and PTR, a minimum distance of K40 applies or fragment distance, whichever is greater. Distances will be based on a single round of 1.6 ammunition. For aboveground IMD and ILD, a minimum distance of K18 applies, based on a single round of 1.6 ammunition.

[5] For HD 1.6 items packed in nonflammable pallets or packing stored in earthcovered steel or concrete arch magazines, the following Q-D criteria apply, unless table 5–7 permits a lesser distance; IBD and PTR - 100 feet; aboveground IMD and ILD - 50 feet; earthcovered IMD - no specified requirements.

Table 5–19
HD 1.1.QD for military aircraft parking areas

NEW in pounds	Distance in feet for targets listed in table 5–20[1]	NEW in pounds	Distance in feet for targets listed in table 5–20[1]
50	110	50,000	1,105
100	140	55,000	1,140
200	175	60,000	1,175
300	200	65,000	1,205
400	220	70,000	1,235
500	240	75,000	1,265
600	255	80,000	1,295
700	265	85,000	1,320
800	280	90,000	1,345
900	290	95,000	1,370
1,000	300	100,000	1,390
1,500	345	125,000	1,500
2,000	380	150,000	1,595
3,000	435	175,000	1,675
4,000	480	200,000	1,755
5,000	515	225,000	1,825
6,000	545	250,000	1,890
7,000	575	275,000	1,950
8,000	600	300,000	2,005

Table 5–19
HD 1.1.QD for military aircraft parking areas—Continued

NEW in pounds	Distance in feet for targets listed in table 5–20[1]	NEW in pounds	Distance in feet for targets listed in table 5–20[1]
9,000	625	325,000	2,065
10,000	645	350,000	2,115
15,000	740	375,000	2,165
20,000	815	400,000	2,210
25,000	875	425,000	2,250
30,000	935	450,000	2,300
35,000	980	475,000	2,340
40,000	1,025	500,000	2,380
45,000	1,070		

Notes:
[1] To protect against low angle, high speed fragments, barricades will be provided; however, these distances will not be reduced.
[2] The distance given for 0 to 50 pounds of NEW constitutes the minimum spacing permitted.
[3] The minimum distance of 1,250 feet for HC/D 1.1 does not apply to targets for which this table is used.

Table 5–20
Application of ammunition and explosives safety distances between various types of facilities

	To					
From	**Combat aircraft parking area**	**Ammunition/-explosives cargo area**	**Ammunition/-explosives storage**	**Ammunition/-explosives operations**	**Ready ammunition storage facility**	**Inhabited building**
Combat aircraft parking area	3	3	3	4	3	1
Ammunition/- explosives cargo area	3	3	3	4	3	1
Ammunition/- explosives storage	5	3	3	4	3	1
Ammunition/- explosives operations	5	3	3	4	3	1
Ready ammunition storage facility	3	3	3	4	3	1
From	**PTR and taxiway for DOD and non-DOD use**	**Runway DOD and non-DOD use**	**Runway/taxiway for DOD only**	**Aircraft parking**	**Aircraft passenger area**	**Recreation area**
Combat aircraft parking area	2	1	None	10	7	8
Ammunition/- explosives cargo area	2	1	None	10	7	9
Ammunition/- explosives storage	2	1	11	6	7	9
Ammunition/- explosives operations	2	1	2	6	7	9

Table 5–20
Application of ammunition and explosives safety distances between various types of facilities—Continued

	To					
Ready ammunition storage facility	2	1	None	10	7	8

Notes:

[1] Use appropriate IBD. A joint DOD/Non-DOD use runway/taxiway is defined as a runway/taxiway serving both DOD and commercial aircraft. A runway/taxiway serving solely DOD, DOD chartered, or non-DOD aircraft on DOD authorized business (for example, a contractor on business) is not joint use.

[2] Use appropriate PTR distance. A joint DOD/Non-DOD use runway/taxiway is defined as a runway/taxiway serving both DOD and commercial aircraft. A runway/taxiway serving solely DOD, DOD chartered, or non-DOD aircraft on DOD authorized business (for example, a contractor on business) is not joint use.

[3] For HC/D 1.1 explosives, use appropriate intermagazine distance. For HC/D 1.2 explosives, apply note 10, below.

[4] Use appropriate intraline distance.

[5] Use table 5–19 distances for mass detonating and appropriate PTR distances for non-mass detonating items.

[6] Use table 5–19 distances for Army or other service aircraft parking areas and appropriate IBD for non-DOD aircraft parking areas. A joint DOD/Non-DOD use runway/taxiway is defined as a runway/taxiway serving both DOD and commercial aircraft. A runway/taxiway serving solely DOD, DOD chartered, or non-DOD aircraft on DOD authorized business (for example, a contractor on business) is not joint use.

[7] Use appropriate PTR distances for locations in the open where passengers board and leave the plane; use appropriate IBD if a structure is included where passengers assemble, such as a passenger terminal building.

[8] No distance is required to recreational areas that are used exclusively for alert personnel manning the combat loaded aircraft. Other recreational areas where people are in the open shall be at appropriate PTR distance. When structures, including bleacher stands, are a part of such an area, appropriate IBD shall be used.

[9] Recreational areas, where people are in the open, shall be at appropriate distance. When structures, including bleacher stands, are part of such areas, appropriate IBD shall be used.

[10] Within the areas of airfields, heliports, and seadromes used exclusively by the Army or other services, the separation of aircraft parking areas from combat aircraft parking areas and their ready ammunition storage facilities and ammunition and explosives cargo areas are considered to be a MACOM function. At joint DOD/non-DOD use airfields, heliports, and seadromes, the combat aircraft parking area and its ready ammunition storage facilities and ammunition and explosives cargo area shall be separated from non-DOD aircraft by IBD.

[11] Use 18W(1/3) distances from side or rear of standard earth covered magazine containing mass detonating items to the taxiway; use appropriate PTR distance from the side or rear of standard earth covered magazines containing non-mass detonating items to the taxiway; use appropriate PTR distance from the front of standard earth covered magazines, and from any other storage location containing mass detonating or non-mass detonating items to the runway.

Table 5–21
Liquid propellant HE (TNT) equivalents [2,3,4,5,6,7]

Propellant combinations	Static test stands	Range launch
LO_2LH_2 or B_5H_9 an oxidizer	60%	60%
LO_2/LH_2 and LO_2/RP–1	Sum of 60% for LO_2/LH_2plus 10% for LO_2/RP–1	Sum of 60% for LO_2/LH_2plus 20% for LO_2/RP–1
LO_2/RP–1, LO_2 /NH_3 or B_5H_9 and a fuel	10%	20% up to 500,000 pounds plus 10% over 500,000 pounds
IRFNA/Aniline[1]	10%	10%
IRFNA/UDMH[1]	10%	10%
IRFNA/UDMH plus JP–4[1]	10%	10%
N_2O_4/UDMH plus N_2H_4[1]	5%	10%
N_2O_4UDMH plus N_2H_4[1] plus solid propellants	5% plus the NEW of the solid propellants	10% plus the NEW of the solid propellant
Tetranitromethane (alone or in combinations)	100%	100%
Nitromethane (alone or in combinations)	100%	100%

Notes:

[1] These propellant combinations are hypergolic.

[2] The percentage factors given in the table are to be used to determine the equivalences of propellant mixtures at static test stands and range launch pads when such propellants are located aboveground and are unconfined except for their tankage. Other configurations shall be considered on an individual basis to determine the equivalents.

[3] The explosive equivalent weight calculated using this table shall be added to any non-nuclear explosives weight aboard before distances can be determined from tables 5–1 and 5–3.

[4] The equivalences apply also when the following substitutions are made: Alcohols or other hydrocarbons may be substituted for PR–1; BrF_5, $C1F_3$, F_2, H_2, H_2O_2, OF_2, or O_2F_2 may be substituted for LO_2; MMH may be substituted for N_2H_4 or UDMH; C_2H_4O may be substituted for any propellant; or NH_3 may be substituted for any fuel if a hypergolic combination results.

[5] Use LO_2/rp–1 distances for pentaborane plus a fuel and LO_2LH_2 distances for pentaborane plus and oxidizer.

[6] For quantities of propellant up to, but not over, the equivalent of 100 pounds of explosives, the distance shall be determined on an individual basis by the controlling MACOM with USATCES approval. All personnel and facilities, whether involved in the operation or not, shall be protected adequately by proper operating procedures, equipment design, shielding, barricading, or other suitable means.

[7] Distances less than intraline are not specified. When a number of prepackaged liquid propellant units are stored together, separation distance to other storage facilities shall be determined on an individual basis, taking into consideration normal hazard classification procedures.

Table 5–22
Factors for converting gallons of propellant into pounds[1]

Propellant	Density (pounds per gallon)	At temperature (degrees F.)
Anhydrous ammonia	5.1	68
Aniline	8.5	68
Bromine pentafluoride	20.7	68
Chlorine trifluoride	15.3	68
Ethyl alcohol	6.6	68
Ethylene oxide	7.3	68
Fluorine	12.6	-306
Furfuryl alcohol	9.4	68
Hydrogen peroxide (90%)	11.6	68
Hydrazine	8.4	68
Isopropyl alcohol	6.6	68
Liquid hydrogen	0.59	-423
Liquid oxygen	9.5	-297
Methyl alcohol	6.6	68
Monomethyl hydrazine	7.3	68
Nitromethane	9.5	68
Nitrogen tetroxide	12.1	68
Oxygen difluoride	12.7	-229
Otto fuel	10.5	77
Ozone difluoride	14.6	-297
Pentaborane	5.2	68
Perchloryl fluoride	12.0	68
Red fuming nitric acid	12.5	68
RP–1	6.8	68
Tetranitromethane	13.6	78
UDMH	6.6	68
UDMH/hydrazine	7.5	68

Notes:
[1] To convert quantities of propellants from gallons to pounds: pounds of propellant equals gallons of propellant times density in pounds per gallon.

Table 5–23
Liquid propellants hazard and compatibility groups

Propellant	Hazard group[1]	Storage group[2]
Alcohols, CH_3OH, C_2H_5OH, $(CH_3)_2,CHOH$	I	C
Anhydrous Ammonia NH_3	I	C
Aniline $C_6H_5NH_2$	I	C
Hydrocarbon fuels JP–4, JP–5, RP–1	I	C
Monopropellant NOS–58–6	I	C
Nitrogen Tetroxide N_2O_4	I	A
Otto fuel II	I	G
Red fuming nitric acid HNO_3	I	A
Bromine pentafluoride BrF_5	II	A
Chlorine trifluoride $C1F_3$	II	A
Hydrogen peroxide greater than 52% H_2O_2	II[3]	A
Liquid fluorine LF_2	II	A
Liquid oxygen LO_2	II	A
Perchloryl fluoride CLO_3F	II	A
Oxygen fluoride OF_2	II	A
Ozone difluoride O_3F_2	II	A
Ethylene oxide C_2H_4O	III	D
Hydrazine N_2H_4	III	C
Hydrazine-UDMH mixtures	III	C
Liquid hydrogen LH_2	III	C
Mixed amine fuels	III	C
Monomethylhydraizine CH_3NHNH_3	III	C
Propellant	III	D
Pentaborane B_5H_9	I	D
Triethyl Boron $B(C_2H_5)_3$	III	C
UDMH $(CH_3)_2NNH_2$	IV[5]	F[4]
Nitromethane CH_3NO_2	IV	F

Table 5–23
Liquid propellants hazard and compatibility groups—Continued

Propellant	Hazard group[1]	Storage group[2]
Tetranitromethane $C(NO_2{}_4$	IV	F

Notes:

[1] For some of the materials listed, the toxic hazard may be an overriding consideration. Consult applicable regulations and, if necessary, other authorities or publications for determination of toxic siting criteria.

[2] All propellants in a compatibility group are considered compatible. Groupings are not to be confused with ammunition and explosives compatibility groupings with like letters.

[3] Under certain conditions, this propellant can detonate. However, its sensitivity to detonation is not greater than that of a standard energetic double base solid propellant under the same conditions.

[4] Nitromethane is chemically compatible with compatibility storage group C liquid propellants, but due to differences in hazards should be stored separately.

[5] Technical grade nitromethane in unit quantities of 55 gallons or less in DOT 17E or C drums may be stored as hazard group II provided the following conditions apply: drums are stored only one tier high; drums are protected from direct rays of sun; and maximum storage life is 2 years, unless storage life tests indicate product continues to meet purchase specification. Such tests are to be repeated at 1 year intervals thereafter.

Table 5–24 (PAGE 1)
QD for propellants

Pounds of propellant		Hazard group I		Hazard group II		Hazard group III		
Over:	Not Over:	IBD, PTR, & incompatible group I[4]	Intra-group (ILD)[1] & group I[5]	IBD, PTR, & incompatible group II[6]	Intra-group (ILD)[1] & group II[7]	IBD, PTR, & incompatible group III		Intra-group (ILD)[1] & group III[11]
						Unprotected[9]	Protected[8, 10]	
0[2]	100	30	25	60	30	600	80	30
100[2]	200	35	30	75	35	600	100	35
200[2]	300	40	35	85	40	600	110	40
300[2]	400	45	35	90	45	600	120	45
400[2]	500	50	40	100	50	600	130	50
500	600	50	40	100	50	600	135	50
600	700	55	40	105	55	600	140	55
700	800	55	45	110	55	600	145	55
800	900	60	45	115	60	600	150	60
900	1,000	60	45	120	60	600	150	60
1,000	2,000	65	50	130	65	600	175	65
2,000	3,000	70	55	145	70	600	190	70
3,000	4,000	75	55	150	75	600	200	75
4,000	5,000	80	60	160	80	600	210	80
5,000	6,000	80	60	165	80	600	220	80
6,000	7,000	85	65	170	85	600	225	85
7,000	8,000	85	65	175	85	600	230	85
8,000	9,000	90	70	175	90	600	235	90
9,000	10,000	90	70	180	90	600	240	90
10,000	15,000	95	75	195	95	1,200	260	95
15,000	20,000	100	80	205	100	1,200	275	100
20,000	25,000	105	80	215	105	1,200	285	105
25,000	30,000	110	85	220	110	1,200	295	110
30,000	35,000	110	85	225	110	1,200	300	110
35,000	40,000	115	85	230	115	1,200	310	115
40,000	45,000	120	90	235	120	1,200	315	120
45,000	50,000	120	90	240	120	1,200	320	120

Table 5–24 (PAGE 2)
QD for propellants—Continued

Pounds of propellant		Hazard group I		Hazard group II		Hazard group III		
Over:	Not Over:	IBD, PTR, & incompatible group I[4]	Intra-group (ILD)[1] & group I[5]	IBD, PTR, & incompatible group II[6]	Intra-group (ILD)[1] & group II[7]	IBD, PTR, & incompatible group III		Intra-group (ILD)[1] & group III[11]
						Unprotected[9]	Protected[8, 10]	
50,000	60,000	125	95	250	125	1,200	320	125
60,000	70,000	130	95	255	130	1,200	340	130
70,000	80,000	130	100	260	130	1,200	350	130
80,000	90,000	135	100	265	135	1,200	360	135
90,000	100,000	135	105	270	135	1,200	365	135
100,000	125,000	140	110	285	140	1,800	380	140
125,000	150,000	145	110	295	145	1,800	395	145
150,000	175,000	150	115	305	150	1,800	405	150
175,000	200,000	155	115	310	155	1,800	415	155
200,000	250,000	160	120	320	160	1,800	425	160
250,000	300,000	165	125	330	165	1,800	440	165
300,000	350,000	170	130	340	170	1,800	455	170
350,000	400,000	175	130	350	175	1,800	465	175
400,000	450,000	180	135	355	180	1,800	475	180
450,000	500,000	180	135	360	180	1,800	485	180
500,000	600,000	185	140	375	185	1,800	500	185
600,000	700,000	190	145	385	190	1,800	515	190
700,000	800,000	195	150	395	195	1,800	530	195
800,000	900,000	200	150	405	200	1,800	540	200
900,000	1,000,000	205	155	410	205	1,800	550	205
[3]1,000,000	2,000,000	235	175	470	235	1,800	630	235
2,000,000	3,000,000	255	190	505	255	1,800	675	255
3,000,000	4,000,000	265	200	535	265	1,800	710	265
4,000,000	5,000,000	275	210	555	275	1,800	740	275
5,000,000	6,000,000	285	215	570	285	1,800	760	285
6,000,000	7,000,000	295	220	585	295	1,800	780	295
7,000,000	8,000,000	300	225	600	300	1,800	800	300
8,000,000	9,000,000	305	230	610	305	1,800	815	305
9,000,000	10,000,000	310	235	620	310	1,800	830	310

Table 5–24 (PAGE 3)
QD for propellants—Continued

Notes:

1. The separation distances between propellants of different SCGs will be the IBD for the propellant quantity and the group that requires the greater distance. Compatible storages of different propellants shall be separated by the intragroup storage distances required by the more hazardous groups.

2. See para 5-12a.

3. Extrapolations above 1,000,000 lbs extend well outside data included in the Bureau of Mines report from which original QD tables were derived; however, they are supported by independent calculations and knowledge of like phenomena.

4. Values are one-half of the group II IBD.

5. Values are three-fourths the groups II and III intragroup distances.

6. Distances were selected as three-fourths the group III IBD and considered reasonable due to the lesser hazard.

7. Distances were derived from the Bureau of Mines, Department of the Interior Report No. 5707, dated 1961, modified and expanded. They average 37.5 percent of the IBD distances given in this report.

8. The term "protected" means that protection from fragments is provided by terrain, effective barricades, nets, or other physical means.

9. Distances are necessary to provide reasonable protection from fragments of tanks or equipment that are expected to be thrown in event of a vapor phase explosion.

10. Distances are the recommended IBD given in the Bureau of Mines, Department of the Interior Report No. 5707, dated 1961, and extrapolation thereof (2 cal/cm^2 on 1 percent water vapor curve).

11. Distances are an average of 37.5 percent of "protected" column.

Table 5–25
Hazard group IV separation distances

Quantity of propellant/explosives	Distances from propellant/explosives			
	To inhabited buildings	To public traffic routes	Intraline	Magazine
Total Weight group IV propellant or HE equivalents for other propellants/explosives (see table 5–21.)	Use table 5–1.	Use table 5–1.	Use table 5–3 or 5–4.	Use tables 5–5 and 5–6.

Table 5–26
Chamber separation

	D_{cp}(ft)	D_{cd}(ft)		
Weight (lbs)	$1.5W^{1/3}$	$2.5W^{1/3}$	$3.5W^{1/3}$	$5.0W^{1/3}$
1,000	15	25	35	50
1,200	16	27	37	53
1,400	17	28	39	56
1,600	17.5	30	41	58
1,800	18	31	43	61
2,000	19	32	44	63
2,500	20.4	34	48	68
3,000	22	36	50	72
3,500	23	38	53	76
4,000	24	40	56	79
4,500	25	42	58	83
5,000	26	43	60	85
6,000	27	46	64	91
7,000	29	48	67	96
8,000	30	50	70	100
9,000	31	52	73	104
10,000	33	54	76	108

Table 5–26
Chamber separation—Continued

	D_{cp}(ft)	D_{cd}(ft)		
Weight (lbs)	$1.5W^{1/3}$	$2.5W^{1/3}$	$3.5W^{1/3}$	$5.0W^{1/3}$
12,000	34	58	80	114
14,000	36	61	84	121
16,000	38	63	88	126
18,000	39	66	92	131
20,000	41	68	95	136
25,000	44	74	102	146
30,000	47	78	109	155
35,000	49	82	114	164
40,000	51	86	120	171
45,000	53	89	124	178
50,000	55	93	129	184
60,000	59	98	137	196
70,000	62	103	144	206
80,000	65	108	151	215
90,000	67	112	157	224
100,000	70	116	162	232
120,000	74	124	173	247
140,000	78	130	182	260
160,000	81	136	190	271
180,000	85	142	198	282
200,000	88	147	205	292
250,000	94	158	220	315
300,000	100	168	234	335
350,000	106	177	247	352
400,000	111	185	258	368
450,000	115	192	268	383
500,000	119	199	278	397
600,000	127	211	295	422
700,000	133	222	311	444
800,000	139	232	325	464
900,000	145	242	338	483
1,000,000	150	250	350	500

Table 5–27
Distance to protect against ground shock

		D_{ig}/f_g		D_{ig}
Weight (lbs)	$2.1W^{4/9}$	$11.1W^{4/9}$	$12.5W^{4/9}$	$5.8W^{1/3}$
1,000	45	239	269	58
1,200	49	259	292	62
1,400	53	278	313	65
1,600	56	295	332	68
1,800	59	311	350	71
2,000	62	325	366	73
2,500	68	359	405	79
3,000	74	390	439	84
3,500	79	417	470	88
4,000	84	443	499	92
4,500	88	467	525	96
5,000	93	489	551	99
6,000	100	530	597	105
7,000	107	568	640	111
8,000	114	603	679	116
9,000	120	635	715	121
10,000	126	665	749	125
12,000	137	722	813	133
14,000	146	773	870	140
16,000	155	820	923	146
18,000	163	864	973	152
20,000	171	906	1,020	157
25,000	189	1,000	1,126	170
30,000	205	1,084	1,221	180
35,000	220	1,161	1,308	190
40,000	233	1,232	1,388	198
45,000	246	1,298	1,462	206
50,000	257	1,361	1,532	214
60,000	279	1,476	1,662	227
70,000	299	1,580	1,779	239
80,000	317	1,677	1,888	250
90,000	334	1,767	1,990	260
100,000	350	1,852	2,085	269
120,000	380	2,008	2,261	286
140,000	407	2,150	2,421	301
160,000	432	2,282	2,570	315
180,000	455	2,404	2,708	327
200,000	477	2,520	2,837	339
250,000	526	2,782	3,133	365
300,000	571	3,017	3,398	388
350,000	611	3,231	3,639	409
400,000	649	3,429	3,861	427
450,000	684	3,613	4,069	444
500,000	716	3,786	4,264	460
600,000	777	4,106	4,624	489
700,000	832	4,397	4,951	515
800,000	883	4,666	5,254	538
900,000	930	4,916	5,537	560

Table 5–28
Distance to protect against hard rock debris

Weight (lbs)	$C/W^{1/3}$ (ft/lb $^{1/3}$)							
	0.3	0.5	0.7	0.9	1.1	1.6	2.1	3
	D_{id} /f_d(ft)							
1,000	163	180	200	205	195	145	92	62
1,200	170	195	215	220	210	155	98	67
1,400	185	210	230	235	225	165	105	72
1,600	195	220	240	250	240	175	110	76
1,800	205	230	250	260	250	180	115	79
2,000	210	240	260	270	260	190	120	83
2,500	230	260	290	300	290	210	135	91
3,000	250	290	310	320	310	225	145	98
3,500	270	300	330	340	330	240	155	105
4,000	280	320	350	360	350	250	160	110
4,500	300	340	370	380	360	260	170	115
5,000	310	350	380	400	380	280	175	120
6,000	330	380	410	430	410	300	190	130
7,000	350	400	440	460	440	320	205	140
8,000	370	430	470	480	460	330	215	145
9,000	390	450	490	500	480	350	225	155
10,000	410	470	520	520	500	370	235	160
12,000	440	500	560	560	540	400	250	175
14,000	470	540	580	600	580	420	270	185
16,000	500	560	620	640	620	440	290	195
18,000	520	600	640	680	640	470	300	205
20,000	540	620	680	700	680	490	310	215
25,000	600	680	740	760	740	540	340	235
30,000	640	740	800	820	800	580	370	250
35,000	680	780	860	880	840	620	390	270
40,000	720	820	900	940	900	640	420	285
45,000	760	860	940	980	940	680	440	295
50,000	800	900	980	1,000	980	700	460	310
60,000	860	980	1,050	1,100	1,050	760	490	335
70,000	920	1,050	1,150	1,150	1,100	820	520	355
80,000	960	1,100	1,200	1,250	1,100	860	560	375
90,000	1,000	1,150	1,250	1,300	1,250	900	580	395
100,000	1,050	1,200	1,300	1,350	1,300	940	600	410
120,000	1,150	1,300	1,400	1,450	1,400	1,000	660	445
140,000	1,200	1,400	1,500	1,550	1,500	1,100	700	475
160,000	1,300	1,450	1,600	1,650	1,600	1,150	740	500
180,000	1,350	1,550	1,650	1,750	1,650	1,200	780	525
200,000	1,400	1,600	1,750	1,800	1,750	1,250	800	550
250,000	1,550	1,750	1,900	2,000	1,900	1,350	880	600
300,000	1,650	1,900	2,050	2,150	1,500	1,500	960	645
350,000	1,750	2,000	2,200	2,250	2,200	1,600	1,000	690
400,000	1,850	2,100	2,300	2,400	2,300	1,650	1,050	725
450,000	1,950	2,200	2,450	2,500	2,400	1,750	1,100	765
500,000	2,050	2,300	2,500	2,600	2,500	1,800	1,150	800
600,000	2,200	2,500	2,700	2,800	2,700	1,950	1,250	860
700,000	2,350	2,700	2,900	3,000	2,900	2,100	1,350	915
800,000	2,450	2,800	3,100	3,200	3,100	2,200	1,400	965
900,000	2,600	3,000	3,200	3,300	3,200	2,300	1,500	1,015

Table 5–29
Distance to protect against soft rock debris

Weight (lbs)	$C/W^{1/3}$ (FT/LB $^{1/3}$) 0.2	0.6	0.75	0.9	1	1.5	1.75	2.5
	D_{id}/f_d(ft)							
1,000	165	200	207	198	184	91	62	30
1,200	177	216	223	213	199	98	67	32
1,400	189	230	238	227	212	105	72	34
1,600	200	243	251	240	224	110	76	36
1,800	210	255	264	252	235	116	79	38
2,000	219	266	275	263	245	121	83	40
2,500	240	292	302	288	268	133	91	43
3,000	258	314	325	311	289	143	98	47
3,500	275	335	346	331	308	152	104	50
4,000	291	354	366	350	336	161	110	53
4,500	305	371	384	367	342	169	116	55
5,000	319	388	401	383	357	176	121	58
6,000	343	418	432	413	384	190	130	62
7,000	366	445	460	440	409	202	139	66
8,000	386	470	486	464	433	214	147	70
9,000	405	493	510	487	454	224	154	74
10,000	423	515	532	509	474	234	161	77
12,000	456	555	574	548	511	252	173	83
14,000	486	591	611	584	544	269	184	88
16,000	513	624	645	617	575	284	195	93
18,000	539	655	677	648	603	298	204	98
20,000	562	684	707	676	630	311	213	102
25,000	616	750	775	714	690	341	234	112
30,000	664	808	835	798	744	367	252	120
35,000	707	861	890	851	792	391	268	128
40,000	747	909	940	898	837	413	283	136
45,000	784	954	986	943	878	434	297	142
50,000	819	996	1,030	985	917	453	311	148
60,000	882	1,074	1,110	1,061	988	488	335	160
70,000	940	1,144	1,182	1,130	1,053	520	357	170
80,000	993	1,208	1,249	1,194	1,112	549	377	180
90,000	1,042	1,268	1,311	1,253	1,167	576	395	189
100,000	1,088	1,324	1,368	1,308	1,218	602	413	197
120,000	1,172	1,426	1,475	1,410	1,313	648	445	213
140,000	1,249	1,520	1,571	1,502	1,399	691	474	226
160,000	1,319	1,605	1,659	1,586	1,477	730	500	239
180,000	1,384	1,684	1,741	1,665	1,550	766	525	251
200,000	1,445	1,759	1,818	1,738	1,619	800	548	262
250,000	1,584	1,927	1,992	1,905	1,774	876	601	287
300,000	1,707	2,077	2,147	2,052	1,911	944	648	310
350,000	1,818	2,212	2,287	2,186	2,036	1,006	690	330
400,000	1,921	2,337	2,416	2,309	2,151	1,062	729	348
450,000	2,016	2,453	2,535	2,424	2,257	1,115	765	366
500,000	2,105	2,561	2,647	2,531	2,357	1,164	798	382
600,000	2,268	2,760	2,853	2,727	2,540	1,254	860	411
700,000	2,416	2,940	3,039	2,905	2,705	1,336	917	438
800,000	2,552	3,105	3,210	3,068	2,858	1,412	968	463
900,000	2,678	3,259	3,369	3,220	2,999	1,481	1,016	468

Table 5–30
Functions of loading density

Loading density w (lbs/ft$^{1/3}$)	Ground shock f_g ($0.267w^{0.30}$)	Debris f_d ($0.600w^{0.18}$)
1.0	0.27	0.60
1.2	0.28	0.62
1.4	0.29	0.64
1.6	0.31	0.65
1.8	0.32	0.67
2.0	0.33	0.68
2.5	0.35	0.71
3.0	0.37	0.73
3.5	0.39	0.75

Table 5–30
Functions of loading density—Continued

Loading density w (lbs/ft$^{1/3}$)	Ground shock f_g ($0.267w^{0.30}$)	Debris f_d ($0.600w^{0.18}$)
4.0	0.40	0.77
4.5	0.42	0.79
5.0	0.43	0.80
6.0	0.46	0.83
7.0	0.48	0.85
8.0	0.50	0.87
9.0	0.52	0.89
10.0	0.53	0.91
12.0	0.56	0.94
14.0	0.59	0.96
16.0	0.61	0.96
18.0	0.63	1.01
20.0	0.66	1.03
25.0	0.70	1.07
30.0	0.74	1.11
35.0	0.77	1.14
40.0	0.81	1.17
45.0	0.84	1.19
50.0	0.86	1.21
60.0	0.91	1.25
70.0	0.95	1.29
80.0	0.99	1.32
90.0	1.03	1.35
100.0	1.06	1.37

Table 5–31
Values for Ratio $D_{HYD}/V_E^{1/2.8}$

V_E (ft^3)	$D_{HYD}/V_E^{1/2.8}$					
	Effective Hydraulic Diameter, D_{HYD} (ft)					
	10	15	20	25	30	35
1,000	0.8483	1.2725	1.6967	2.1209	2.5450	2.9692
2,000	0.6623	0.9935	1.3246	1.6558	1.9869	2.3181
3,000	0.5730	0.8595	1.1460	1.4326	1.7191	2.0056
4,000	0.5171	0.7756	1.0341	1.2927	1.5512	1.8097
5,000	0.4775	0.7162	0.9549	1.1937	1.4324	1.6711
6,000	0.4474	0.6710	0.8947	1.1184	1.3421	1.5658
7,000	0.4234	0.6351	0.8468	1.0585	1.2702	1.4819
8,000	0.4037	0.6055	0.8074	1.0092	1.2110	1.4129
9,000	0.3871	0.5806	0.7741	0.9676	1.1612	1.3547
10,000	0.3728	0.5591	0.7455	0.9319	1.1183	1.3047
20,000	0.2910	0.4365	0.5820	0.7275	0.8731	1.0186
30,000	0.2518	0.3777	0.5036	0.6295	0.7554	0.8812
40,000	0.2272	0.3408	0.4544	0.5680	0.6816	0.7952
50,000	0.2098	0.3147	0.4196	0.5245	0.6294	0.7343
60,000	0.1966	0.2949	0.3931	0.4914	0.5897	0.6880
70,000	0.1860	0.2791	0.3721	0.4651	0.5581	0.6511
80,000	0.1774	0.2661	0.3548	0.4434	0.5321	0.6208
90,000	0.1701	0.2551	0.3401	0.4252	0.5102	0.5952
100,000	0.1638	0.2457	0.3276	0.4095	0.4914	0.5733
200,000	0.1279	0.1918	0.2557	0.3197	0.3836	0.4476
300,000	0.1106	0.1660	0.2213	0.2766	0.3319	0.3872
400,000	0.0998	0.1497	0.1997	0.2496	0.2995	0.3494
500,000	0.0922	0.1383	0.1844	0.2305	0.2766	0.3226
600,000	0.0864	0.1296	0.1727	0.2159	0.2591	0.3023
700,000	0.0817	0.1226	0.1635	0.2044	0.2452	0.2861
800,000	0.0779	0.1169	0.1559	0.1948	0.2338	0.2728
900,000	0.0747	0.1121	0.1495	0.1868	0.2242	0.2615
1,000,000	0.0720	0.1080	0.1439	0.1799	0.2159	0.2519
2,000,000	0.0562	0.0843	0.1124	0.1405	0.1686	0.1967
3,000,000	0.0486	0.0729	0.0972	0.1215	0.1458	0.1701
4,000,000	0.0439	0.0658	0.0877	0.1097	0.1316	0.1535
5,000,000	0.0405	0.0608	0.0810	0.1013	0.1215	0.1418

Table 5–32
Scaled IBD for airblast without mitigating

NEW (lbs)	$r(1)/(D_{HYD}/V_E^{1/2.8})$					
	Horizontal Angle from Centerline Axis					
	0°	30°	60°	90°	120°	180°
1,000	1,545	1,290	895	621	452	273
2,000	1,979	1,653	1,146	795	579	349
3,000	2,287	1,910	1,325	919	669	404
4,000	2,535	2,117	1,468	1,019	741	448
5,000	2,745	2,292	1,590	1,103	803	485
7,000	3,096	2,585	1,793	1,244	905	547
10,000	3,516	2,936	2,037	1,413	1,028	621
20,000	4,504	3,761	2,609	1,810	1,317	795
30,000	5,206	4,347	3,015	2,092	1,522	919
40,000	5,769	4,818	3,341	2,319	1,687	1,019
50,000	6,247	5,217	3,619	2,511	1,827	1,103
70,000	7,045	5,883	4,081	2,831	2,060	1,244
100,000	8,002	6,683	4,635	3,216	2,340	1,413
200,000	11,977	10,002	6,937	4,813	3,502	2,115
250,000	13,633	11,384	7,896	5,479	3,987	2,407
500,000	17,462	14,582	10,114	7,018	5,106	3,083
700,000	19,691	16,444	11,406	7,914	5,759	3,477
1,000,000	22,367	18,678	12,955	8,989	6,541	3,949
2,000,000	28,649	23,925	16,594	11,514	8,378	5,059
3,000,000	33,113	27,652	19,180	13,308	9,684	5,847
5,000,000	39,740	33,187	23,018	15,972	11,622	7,017
7,000,000	44,815	37,424	25,957	18,011	13,106	7,913
10,000,000	50,903	42,509	29,484	20,458	14,886	8,988

Notes:

[1] IBD for airblast without airblast mitigating devices:

$r(1)/(D_{HYD}/V_E^{1/1.4}) = 149.3\{W^{0.5}/[p_{SO}(1+(1/56)^2)]\}^{1/1.4}$ (English Units)

where: $p_{SO} = 1.2$ psi $W \leq 100{,}000$ lbs

$p_{SO} = 44.57W^{-0.314}$ psi $100{,}000 < W \leq 250{,}000$ lbs

$p_{SO} = 0.9$ psi $W > 250{,}000$ lbs

[2] Reduce IBD by 50% when portal barricade configured IAW COE Definitive Drawing 421-80-04 is used.

[3] Reduce IBD as follows when a closure plug designed IAW COE Definitive Drawing 421-80-04 is used:

Reduction (%) = 0% $w \leq 0.0625$ lb/ft^3

Reduction (%) = $50 \log_{10}(16.02 \cdot w)$ $0.0625 < w \leq 0.625$ lb/ft^3

Reduction (%) = 50% $w > 0.625$ lb/ft^3

Table 5–33
Distance versus overpressure along the centerline

$R = D((P_{SO}/P_W)\ (1 + (0/56)^2))^{-(1/135)}$	
where:	
	R is the distance from the opening in feet
	D is the effective hydraulic diameter, in feet, that controls flow issuing from the opening. An estimate of D may be obtained from the effective cross section, A, and perimeter, P, of the tunnel or opening (whichever controls the flow) through D = 4A/P
	P_W is the effective overpressure at the opening (psi) (table 5-36)
	P_{SO} is the overpressure at distance R (psi)
	O is the horizontal angle from the centerline (degrees)

Table 5–34
Effective overpressure at the opening

$P_W = 895(W/V_T)^{(1.35/3)}$	
where:	
	W is the maximum credible event in pounds
	V_T is the total volume available for gas expansion in cubic feet.

Table 5–35
Allowable overpressure at IBD

P_{so} = 1.2 psi	for	W < 100,000 lbs
$P_{so} = 44.57W^{-0.314}$ psi	for	100,000 lbs < W < 250,000 lbs
P_{so} = 0.9 psi	for	W > 250,000 lbs
For these overpressures, the on-axis IBD distances are determined by the following formulas:		
$R = 134[D/V_T^{1/3}]W^{1/3}$	for	W < 100,000 lbs
$R = 9.23[D/V_T^{1/3}]W^{.566}$	for	< W < 250,000 lbs
$R = 166[D/V_T^{1/3}]W^{1/3}$	for	W > 250,000 lbs
NOTE: Values of $R/[D/V_T^{1/3}]$, where R is the required IBD distance, are listed in table 5-36 for various off-axis angles.		

Table 5–36
IBD distances to protect against airblast

W	$R/[D/V_T^{1/3}]$ (ft) at selected off-axis angles (deg)					
lbs	0 deg	30 deg	60 deg	90 deg	120 deg	180 deg
1000	1340	1110	760	520	370	220
1200	1420	1180	810	550	400	240
1400	1500	1240	850	580	420	250
1600	1570	1300	890	610	440	260
1800	1630	1350	930	630	460	270
2000	1690	1400	960	660	470	280
2500	1820	1510	1030	710	510	300
3000	1930	1600	1100	750	540	320
3500	2030	1690	1160	790	570	340
4000	2130	1760	1210	830	600	350
4500	2210	1840	1260	860	620	370
5000	2290	1900	1300	890	640	380
6000	2430	2020	1380	950	680	400
7000	2560	2130	1460	1000	720	430
8000	2680	2220	1520	1040	750	440
9000	2790	2310	1580	1080	780	460
10000	2890	2400	1640	1120	810	480
12000	3070	2550	1740	1190	860	510
14000	3230	2680	1830	1260	900	540
16000	3380	2800	1920	1310	940	560
18000	3510	2910	1990	1370	980	580
20000	3640	3020	2070	1410	1020	600
25000	3920	3250	2230	1520	1100	650
30000	4160	3450	2360	1620	1160	690
35000	4380	3640	2490	1700	1230	730
40000	4580	3800	2600	1780	1280	760
45000	4770	3950	2710	1850	1330	790
50000	4940	4100	2800	1920	1380	820
60000	5250	4350	2980	2040	1470	870
70000	5520	4580	3140	2150	1550	920
80000	5770	4790	3280	2250	1620	960
90000	6010	4980	3410	2340	1680	1000
100000	6220	5160	3530	2420	1740	1030
120000	6910	5730	3920	2690	1930	1150
140000	7540	6250	4280	2930	2110	1250
160000	8130	6740	4620	3160	2270	1350
180000	8690	7210	4930	3380	2430	1440
200000	9220	7650	5240	3590	2580	1530
250000	10460	8680	5940	4070	2930	1730
300000	11110	9220	6310	4320	3110	1840
350000	11700	9710	6640	4550	3270	1940
400000	12230	10150	6950	4760	3420	2030
450000	12720	10550	7220	4950	3560	2110
500000	13180	10930	7480	5120	3690	2190
600000	14000	11620	7950	5450	3920	2320
700000	14740	12230	8370	5730	4120	2450
800000	15410	12790	8750	5990	4310	2560
900000	16030	13300	9100	6230	4480	2660

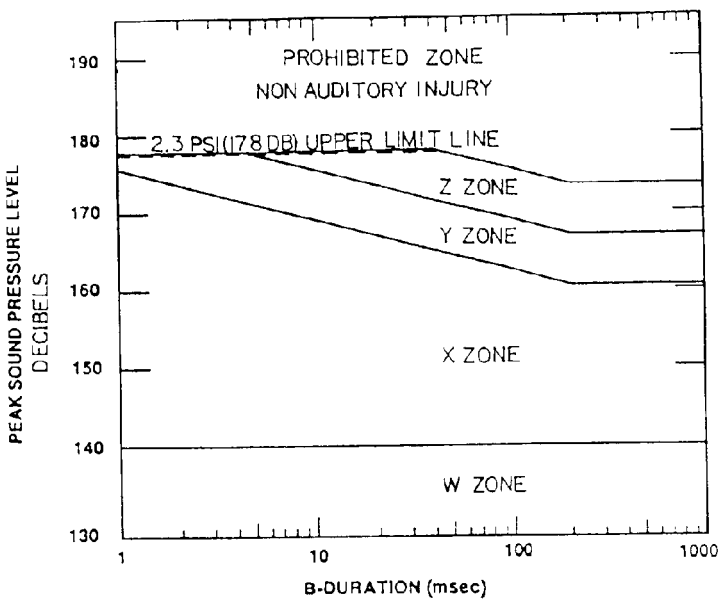

Notes.

1. To find the correct impulse noise zone:

a. Measure the peak sound pressure level in decibels.

b. Determine the B-duration of that sound either by estimation (use Tabel 5-12) or by actual measurement (use MIL STD 1474C). Actual measurement is preferred.

c. Using the peak sound pressure and the B-duration, find the impulse noise zone using Fig 5-1.

2. Once the impulse noise zone is determined, go to Table 5-13 to determine the required protection.

3. For peak sound pressure levels falling within the X, Y, or Z zones of Figure 5-1, the permitted number of exposures per day (see Table 5-13) may be interpolated based on a relationship of 3 db per 4 detonations. For example:

a. Assume the B-duration is 200 msec and the peak sound pressure is 170 decibels.

b. The intersection of 200 msec and 170 db falls in the Z zone.

c. At 200 msec, the upper db limit of the Z zone is approximately 173 db.

d. Since only 170 db was measured, this represents a 3 db reduction. A 3 db reduction allows 4 additional detonations per day over that allowed by Table 5-13.

Figure 5-1. Impulse noise zones for various B-durations and peak sound pressures

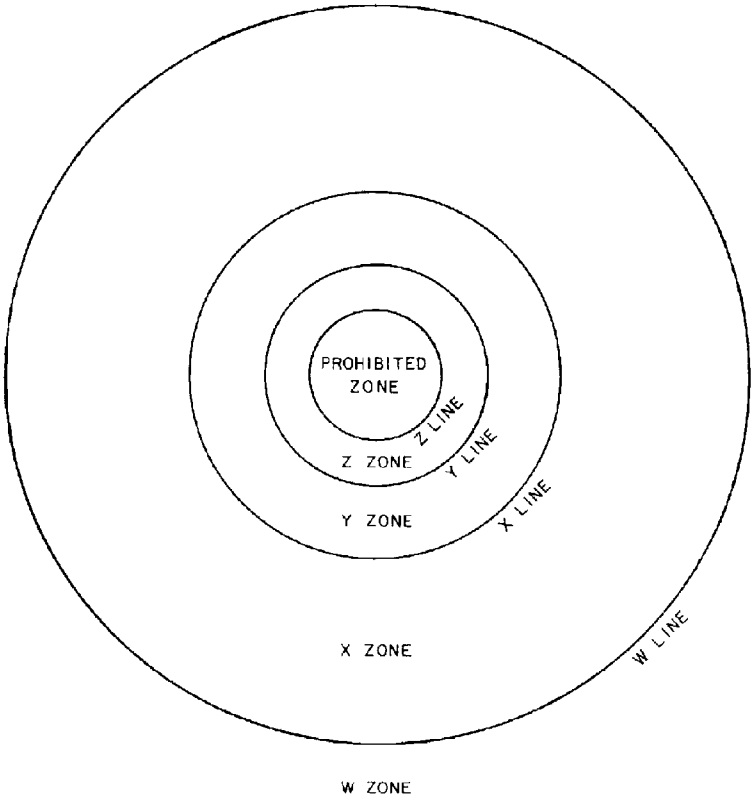

Figure 5-2. Impulse noise zones from intentional detonations

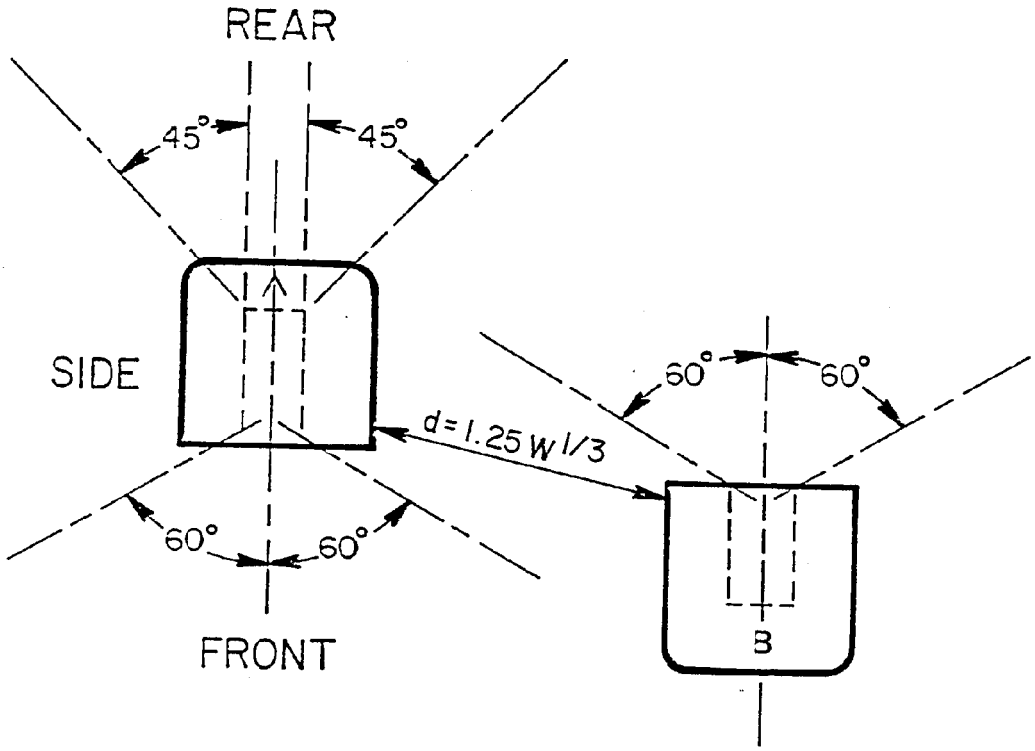

Figure 5-3. Intermagazine hazard factors

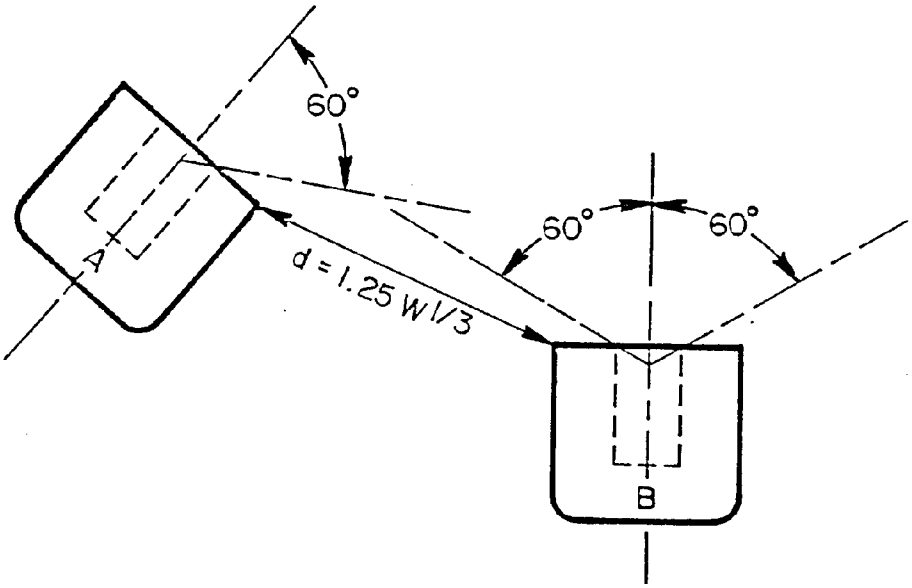

Figure 5-4. Intermagazine hazard factors

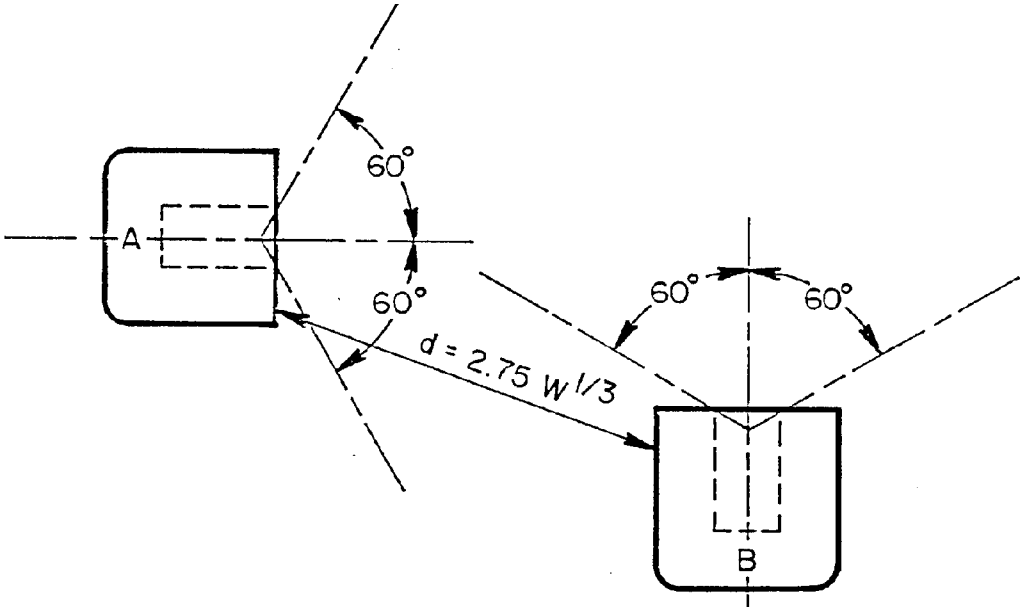

Figure 5-5. Intermagazine hazard factors

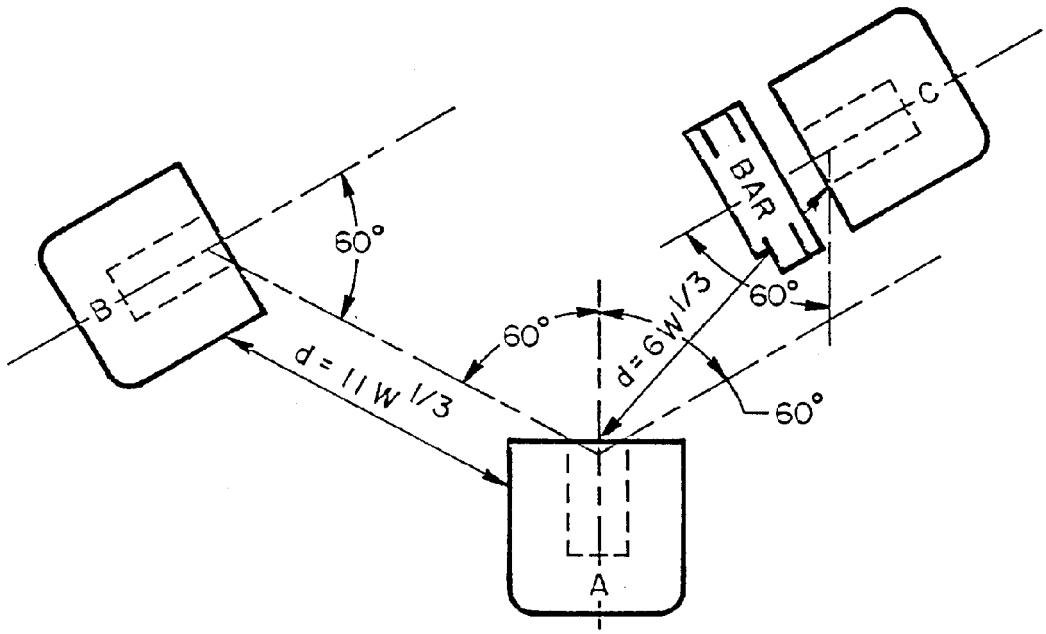

Figure 5-6. Intermagazine hazard factors

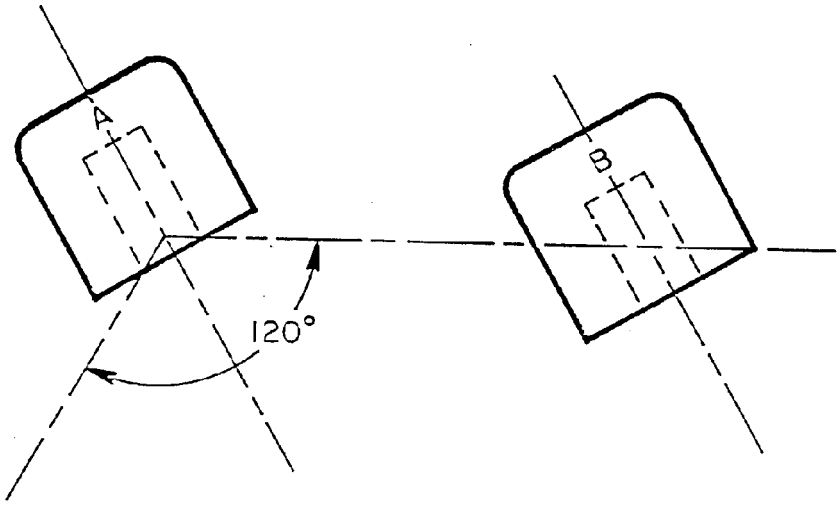

Figure 5-7. Intermagazine hazard factors

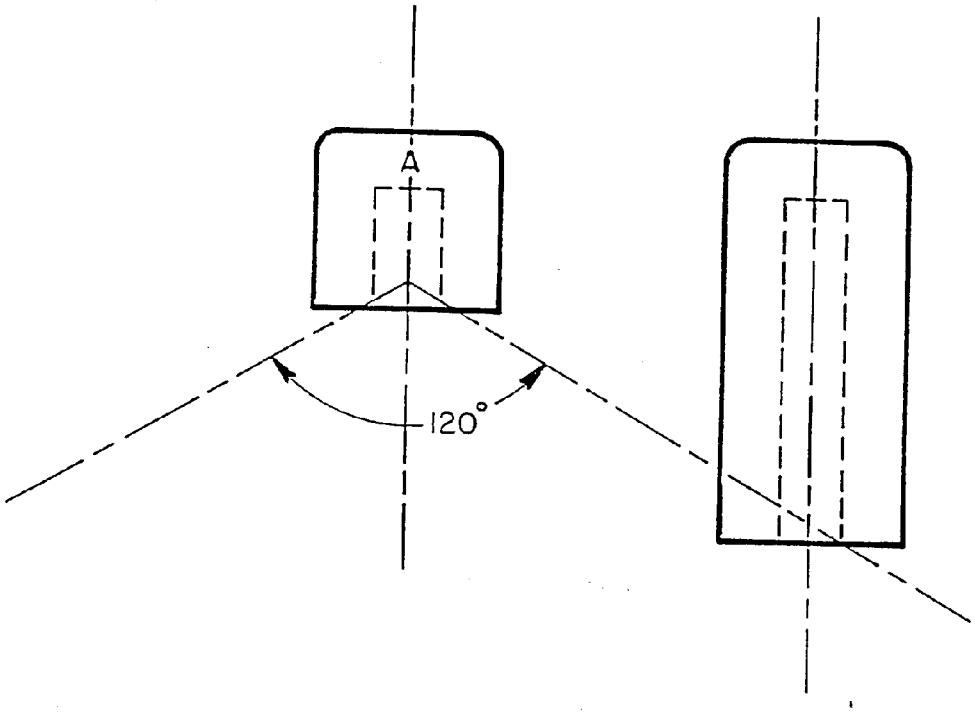

Figure 5-8. Intermagazine hazard factors

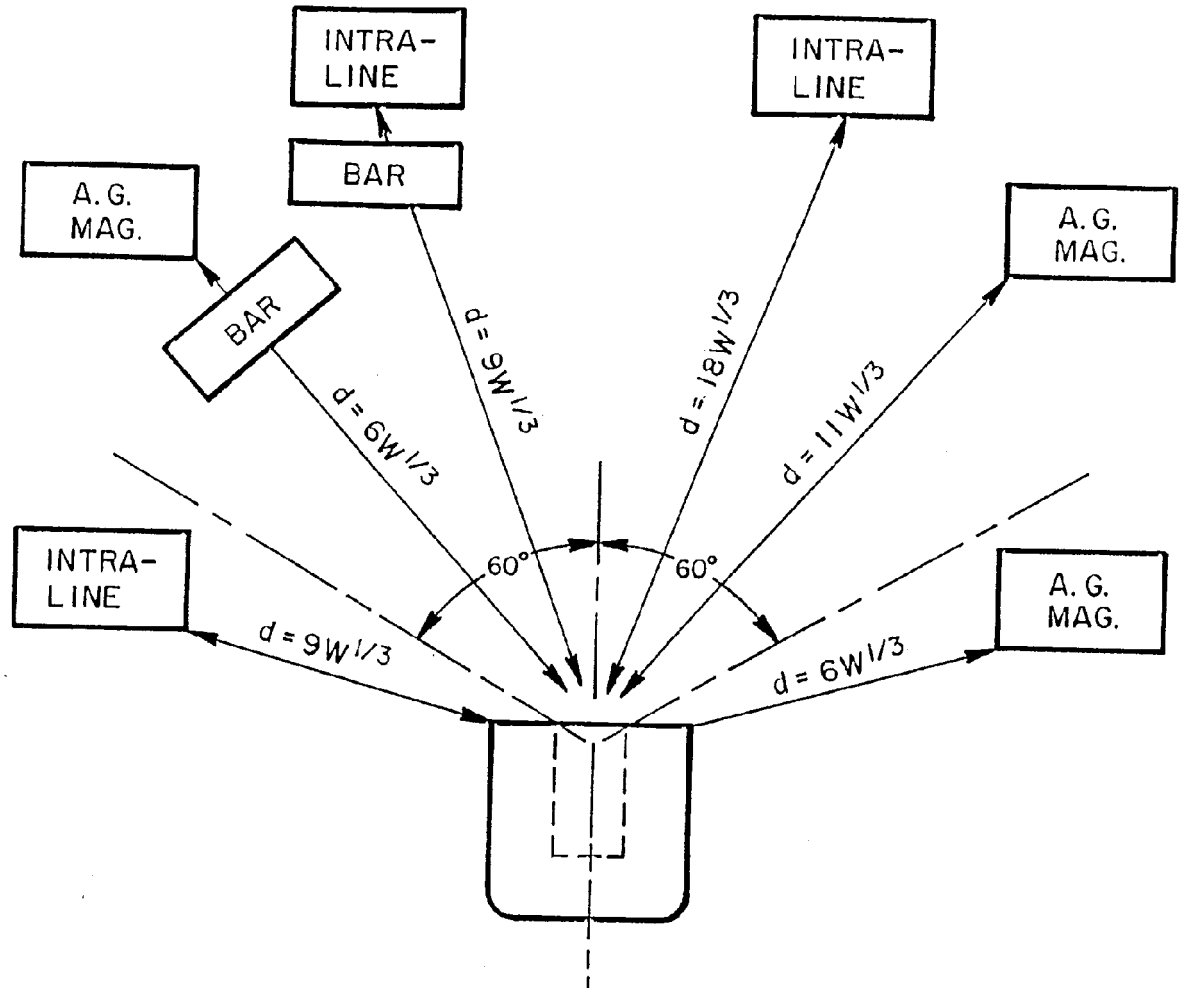

Figure 5-9. Intermagazine hazard factors

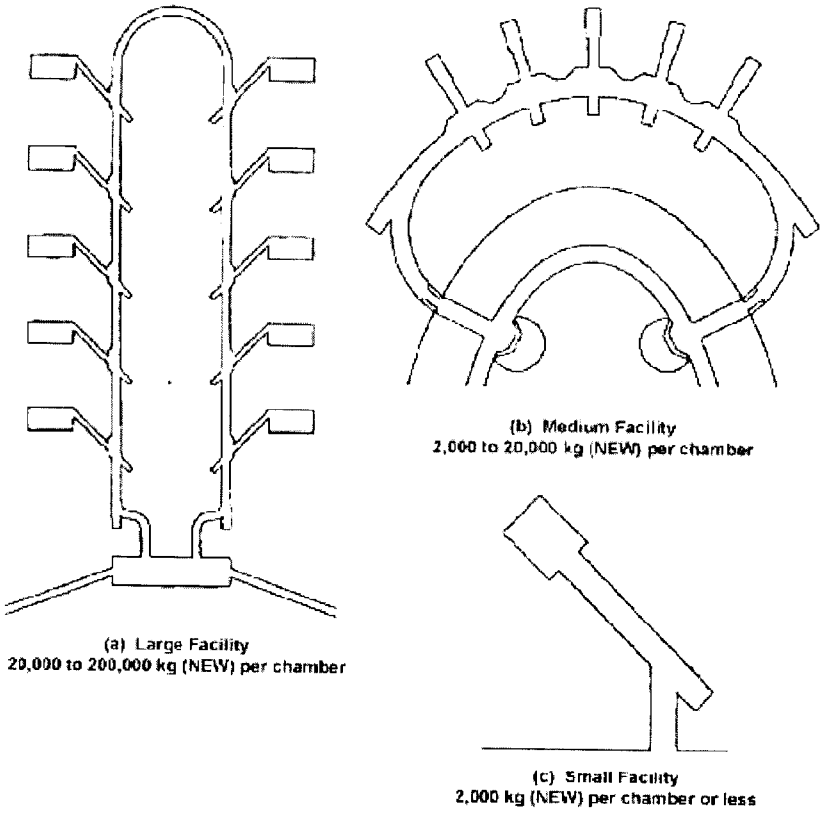

Figure 5-10. Typical Underground Facilities

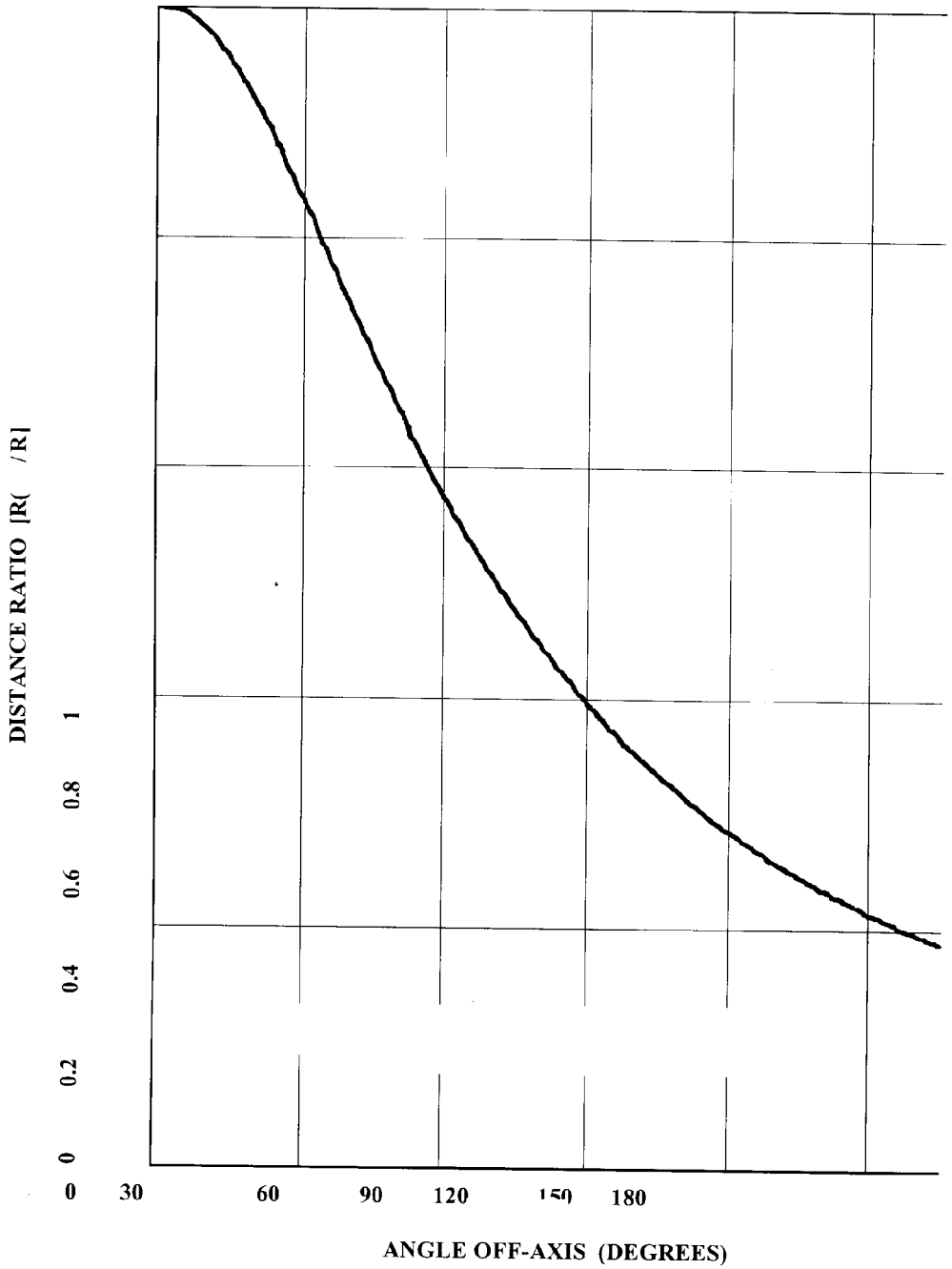

Figure 5-11. Constant Pressure Contour

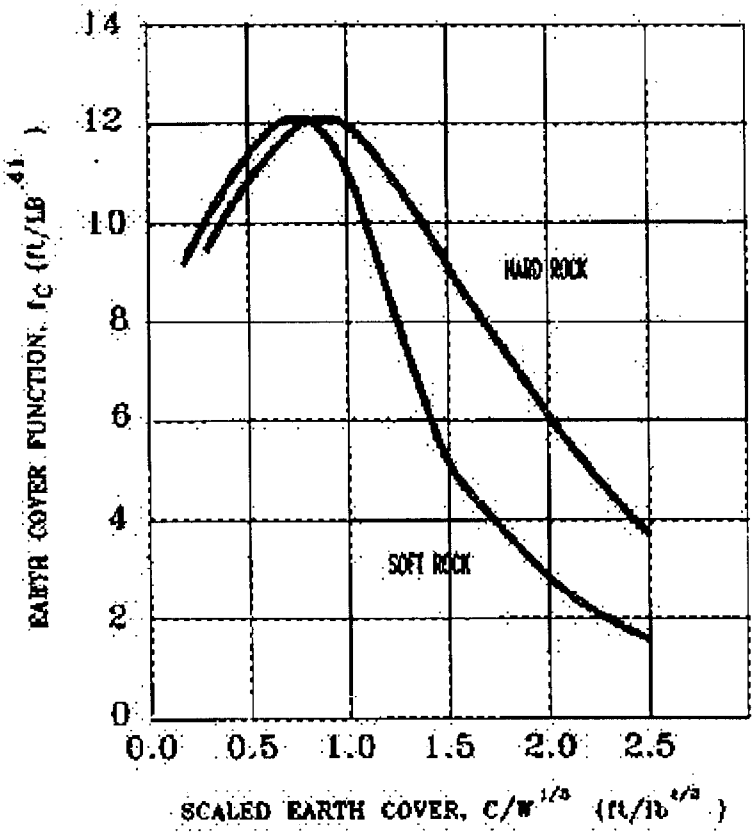

Figure 5-12. Debris Dispersal Functions

Chapter 6
Electrical Hazards

Section I
Electrical Service and Equipment

6–1. Overview

The installation and use of electrical equipment within buildings, magazines, operating locations, shelters, and so forth, containing explosives will comply with the latest edition of the NFPA, Standard 70, unless stated otherwise in this chapter.

6–2. Hazardous locations

Locations are classified depending on the properties of the flammable vapors, liquids or gases, or combustible dusts or fibers which may be present and the likelihood that a flammable or combustible concentration or quantity is present. Where pyrophoric (spontaneously igniting in air) materials are used or handled, these locations will not be classified. Each room, section, or area will be considered individually in determining its classification. To qualify as a hazardous location, conditions listed in paragraph 6–2*a* through *c* should either exist or be probable in the location. Hazardous locations are divided into three classes. Each class consists of two division: Division 1 (more hazardous) and division 2. Hazardous locations require either explosives dusts, flammable vapors, or ignitable flyings (or fibers) to be present in a proper mixture with air. Ammunition storage structures will not normally have the proper mixture and would not be considered a hazardous location within the context of this definition. Additional information can be found in NFPA 70, article 500.

a. Class I. Class I locations are those in which flammable gases or vapors are or may be present in the air in quantities sufficient to produce explosive or ignitable mixtures. Rooms or buildings containing vapors from explosives which may condense will be considered Class I, Division 1 locations. Electrical equipment must have been tested and listed by a recognized testing agency as suitable for installation and use in Class I hazardous locations for safety of operation in the presence of flammable mixtures of specific vapors or gases in the air.

(1) *Class I, Division 1.* Class I, Division 1 locations are those in which—

(a) Hazardous concentrations of flammable gases or vapors exist continuously, intermittently, or periodically under normal operating conditions.

(b) Hazardous concentrations of flammable gases or vapors may exist frequently because of repair or maintenance operations or because of leakage.

(c) Breakdown or faulty operation of equipment or processes which might release hazardous concentrations of flammable gases or vapors might also cause simultaneous failure of electrical equipment.

(d) Explosives may sublime and outgas.

(e) Equipment operating temperatures will not have an external temperature capable of igniting the flammable mixture of the specific gas or vapor in its location.

(2) *Class I, Division 2.* Class I, Division 2 locations are those in which—

(a) Volatile flammable liquids or flammable gases are handled, processed, or used. In these areas the hazardous liquids, vapors, or gases normally are confined within closed containers or systems from which they can escape only in an accidental rupture or breakdown of such containers or systems or during abnormal operation of equipment.

(b) Positive mechanical ventilation normally prevents hazardous concentrations of gases or vapors from accumulating, but concentrations might become hazardous if the ventilating equipment fails or malfunctions.

(c) Hazardous concentrations of gases or vapors occasionally might accumulate if they spread from adjacent Class I, Division 1 locations unless prevented by adequate positive-pressure ventilation from a source of clean air, and effective safeguards against ventilation failure are provided.

b. Class II. Class II locations are those locations which are hazardous because of the presence of combustible dust. Rooms or buildings that contain explosive dusts or explosives having a chemical composition or physical size such that particles of explosives may become disassociated from the whole and disperse in the surrounding atmosphere, will be considered Class II hazardous locations. Equipment installed in Class II locations will be able to function at full rating without developing surface temperatures high enough to cause excessive dehydration or gradual carbonization of any organic dust deposits that may be present. Dust that is carbonized or excessively dry is highly susceptible to spontaneous ignition. Operating temperatures of electrical equipment will not be high enough to ignite expected dusts in its location if equipment, such as motors, power transformers, and so forth, becomes overloaded. Equipment and

wiring defined as explosion-proof is not required in Class II locations, and may not be acceptable unless it meets all the requirements of NFPA 70, Article 500 for Class II locations.

(1) *Class II, Division 1.* Class II, Division 1 locations are those in which—

(a) Combustible dust is or may be suspended in the air continuously, intermittently, or periodically under normal operating conditions in quantities sufficient to produce an explosion or ignition.

(b) Mechanical failure or malfunctioning machinery or equipment may cause explosive or ignitable mixtures to be produced, or become a source of ignition through simultaneous failure of electrical equipment and protection devices or other causes.

(c) Combustible dusts which are electrically conductive may be present.

(d) Explosives or explosive dusts may, during handling, produce dust capable of being dispersed in the atmosphere.

(e) Explosives may outgas.

(2) *Class II, Division 2.* Class II, Division 2 locations are those in which—

(a) Combustible dust will not normally be suspended in the air, or thrown into suspension, by the normal operation of equipment or apparatus in quantities sufficient to produce explosive or ignitable mixtures.

(b) Deposits or accumulations of dust may be sufficient to interfere with the safe dissipation of heat from electrical equipment or apparatus.

(c) Deposits or accumulations of combustible dust on, in, or in the vicinity of, electrical equipment may be ignited by arcs, sparks, or burning material from electrical equipment.

c. Class III. Class III locations are those that could be hazardous because of the presence of easily ignitable fibers or flyings, but where these fibers or flyings are not likely to be in suspension in the air in quantities sufficient to produce ignitable mixtures. These locations include combustible fiber manufacturing pressing plants, woodworking plants, and establishments involving similar hazardous processes or conditions. Easily ignitable fibers and flyings include rayon, cotton, hemp, oakum, excelsior, and other materials of similar nature.

(1) *Class III, Division 1.* Class III, Division 1 locations are those in which easily ignitable fibers or materials that produce combustible flyings are handled, manufactured, or used.

(2) *Class III, Division 2.* Class III, Division 2 locations are those in which easily ignitable fibers are stored or handled, excluding locations where ignitable fibers are stored or handled during manufacturing.

d. Change of classification. Operating buildings and magazines are constructed to perform a specific function which dictates the requirements for electrical equipment installation. If the functions performed in the facility change or are rearranged, the safety officers must inspect, approve, or reclassify the hazardous locations. Multiple classifications are discussed in the following paragraph.

e. Multiple classifications. In some areas of Army operating buildings or magazines there may be hazards from both dust and flammable vapors. If so, these areas will have a dual or multiple classification. Electrical equipment used in these areas must be listed by a recognized testing agency as suitable for use in all hazardous locations to which it will be subjected.

f. Special requirements.

(1) Electrical equipment and installations in Class I, II, or III hazardous locations involving explosives will comply with the requirements of the code for Division 1 of the appropriate hazardous location class. Equipment and installations in locations which could be used as either a Class I or II hazardous location will meet the requirements of both classes.

(2) An alternate source of power must be available for explosives operations where the lack of a continuous power supply may cause a fire or explosion.

(3) Low power, solid state devices which are intrinsically safe under the NFPA, Standard 70, Article 504, may be used in any hazardous location, provided they do not introduce a physical or electromagnetic radiation (EMR) hazard. See section III of this chapter for more information on EMR.

g. Maintenance. More than ordinary care will be taken to maintain equipment and electrical installations in hazardous locations. The equipment must be periodically inspected and maintained by qualified personnel, with a written record kept of the inspections and maintenance. Where inspection frequency is not prescribed in a TM or other directive, the inspection period will be fixed by local authority on the basis of the existing situation.

h. Photographic lighting. Magnesium flashlights or photoflash bulbs are not allowed in hazardous locations. Only lighting equipment bearing the Underwriter's Laboratory (UL) listed label for the hazard involved will be used in photography.

6–3. Approved equipment

a. Listed equipment. Electrical equipment listed by a recognized testing agency, is acceptable only when used under the recommended environmental and operational conditions. Equipment will be approved not only for the class of location but also for the explosive properties of the specific gas, vapor, or dust that will be present. For additional details, see NFPA 70.

b. Unlisted equipment. Electrical equipment not specifically listed by a recognized testing agency for the purpose or

operating condition present may be certified for use by a qualified safety or system safety engineer (GS–803). This certification will be based on the following:

(1) Listed equipment is not available from any source;

(2) Hazard analysis has determined that no additional hazards would be created by using this equipment. Unlisted equipment certification and justification thereof, must be maintained at the installation until the equipment is withdrawn from service.

c. Underground storage facilities All wiring and electrical equipment in underground storage facilities must, in addition to any other requirements of this chapter, be of moisture and corrosion resistant materials and construction unless a site-specific analysis indicates that such construction is not necessary. Underground facilities must have emergency lighting systems to provide minimum illumination in the event of a power failure.

6–4. Maintenance of electrical equipment

Only qualified personnel authorized to do such work will perform maintenance. Where equipment may have been contaminated by explosives, the explosives will be removed or neutralized before maintenance is started.

6–5. Electrical service lines in explosives areas

Each service line will be run underground from a point at least 50 feet away from the building. The exterior line side of the main disconnecting switch or circuit breaker must have suitable lightning arrestors. See paragraph 5–7o for separation distance for electrical lines.

a. Surge (lightning) arresters will be required and installed as specified in NFPA 70, Article 280.

b. Local telephone service and similar low voltage intercom or alarm systems must also comply with the same underground routing for the last 50 feet. Surge protection, even for lines that run underground, will be provided to shield against any severe electrical surges from a nearby lightning strike or from excessive power through the line from other outside sources, such as broken power lines. Surge suppression for incoming conductors must include suppression at the entrance to the building from each wire to ground.

c. Ground fault interrupters virtually eliminate electrical shock hazards presented by line-to-ground fault currents and leakage currents by removing power from the faulty circuit. When building or renovating facilities, all 120 volts alternating current (VAC) single-phase receptacle outlets installed outdoors will have ground fault circuit protection. Ground fault protection will be provided in other areas where conditions creating a high-level electrical hazard exist. Ground fault circuit interrupters can often be activated by spurious electrical impulses. Therefore, these devices will not be used on circuits that serve critical equipment and processes; for example, lighting in an explosives building, or lighting required for a safe exit from any building.

6–6. Electrical motors for hazardous locations

Electrical motors should not be installed in a room or building which is a Class I or II hazardous location. They should have no connection to the building except through glands or apertures adequately sealed against entrance of hazardous materials either into the location or into the motor itself. If an electrical motor must be located in a hazardous location, paragraph 6–3 applies.

6–7. Portable lighting systems

a. Floodlight systems, which are listed by an recognized testing agency, may be used where required. These will be mounted on heavy portable stands and placed outside the magazine door or the outside working area. Service cords must be placed or protected so that they cannot be walked on or run over by equipment.

b. Flashlights and hand lanterns powered by low voltage dry cell batteries and miners' cap lamps, each approved as permissible by the U.S. Bureau of Mines and by a recognized testing agency for Class I hazardous locations, are considered satisfactory for both Class I and II hazardous locations. In Class III hazardous locations and nonhazardous explosives locations, any type dry cell flashlight is acceptable. Devices which provide cold light through chemical action are acceptable for any hazardous location.

6–8. Permanent lighting for storage magazines

If permanent lighting is essential, an approved type of disconnect switch must be used. The switch will be placed outside the magazine and arranged so that it can be locked in the open position. The power will be on only when personnel are working in the magazine. The magazine doors will be opened and the magazine interior will be visually inspected before actuating the switch. As a minimum, sparkproof or industrial rated electrical systems in rigid metal conduits, enclosed junction boxes, and closure plates without opening and protective covers for lighting fixtures will be used. Explosion proof lighting is required only for the hazardous locations listed in paragraph 6–2.

6–9. Flexible cords

Flexible cords should be type "S" hard service cords approved for extra hard usage in damp areas as defined in the National Electric Code (NEC). Splices are not allowed. All flexible cords with plugs must be equipped with a ground.

Flexible cords will not be used in place of fixed or installed electrical wiring. Place or protect each electrical cord so that it cannot be walked on or run over by equipment.

Section II
Static electricity

6–10. Static electricity charge dissipation subsystem

a. General information.

(1) *Static electricity.* Static electricity is produced when two unlike materials are brought into contact and then separated. During contact, there is a redistribution of the charge across the area of contact and an attractive force is established. When the materials are separated, work is done in overcoming these attractive forces. This work is stored as an electrostatic field which is set up between the two surfaces when they are separated. If no conducting path is available to allow the charges to bleed off the surfaces, the voltage between the surfaces can easily reach several thousand volts as they are separated. Static electricity is an annoyance to many individuals. Static shock may cause discomfort and even injury to a worker due to involuntary reaction. A far more dangerous aspect of static electricity is the fire and explosion hazard. This hazard can occur in situations where a vapor-air, gas-air, dust-air, or combination of these mixtures exist in the proper ratio. For static to cause ignition, four conditions must exist:

(a) An effective means of static generation.

(b) A means of accumulating the charges and maintaining a difference of electrical potential.

(c) A spark discharge of adequate energy.

(d) The spark must occur in an ignitable mixture.

(2) *Sources.* The most common sources of static electricity are:

(a) Steam, air, or gas flowing from any opening in a pipe or hose, particularly when the stream is wet or when the air or gas stream contains particulate matter.

(b) Pulverized materials passing through chutes and pneumatic conveyors.

(c) Nonconductive power or conveyor belts in motion.

(d) Moving vehicles.

(e) All motion involving changes in relative position of contacting surfaces (usually of dissimilar substances), of which one or both must be a poor conductor of electricity. The following paragraph provides information and procedures on how to control static electricity charge dissipation.

(3) *Materials sensitive to static spark discharge.* Practically all finely divided combustible materials, especially explosives, when suspended in the proper concentration in air or deposited in finely divided layers, can be ignited by an electro-static spark.

(a) Explosives. The explosives or explosive mixtures that are sensitive to static discharge (electro-static sensitivity of 0.1 joule or less) when exposed are generally primer, initiator, detonator, igniter, tracer, incendiary, and pyrotechnic mixtures. Ammonium picrate, tetryl, RDX compositions, and tetrytol are sensitive to static discharge when present in dust-air mixtures. The following are some of the explosives that can be ignited by a static electricity spark discharged from a person: black powder; diazodinitrophenol; igniter compositions; lead azide; lead styphnate; aluminum, magnesium, titanium, uranium, or zirconium powder exposed in layers; mercury fulminate; mixtures of flammable vapors; potassium chlorate mixed with flammable dusts; pyrotechnic mixtures; smokeless powder dust when present; and tetrazene.

(b) Electro-explosive devices. Static electricity on insulated conductive objects, such as metal stands with rubber casters, or on a person, can discharge through the air to other objects which are at a sufficiently different potential. Such a discharge or spark, even though too small to be felt, may contain enough energy to cause an electro-explosive device, such as a primer or a detonator, to fire. Static discharges may also be strong enough to break down the insulation within the electro-explosive device and cause it to fire.

(c) Solvents. Flammable mixtures of solvents and air can be ignited by the static charge that can be accumulated on a person. Typical flammable solvents are ethyl ether, ethyl alcohol, ethyl acetate, acetone, benzene, and naphtha.

(4) *Static generating materials.* Personnel who work in a hazardous location or who handle or install unpackaged electro-explosive devices and ammunition must avoid using rags and wearing outer garments made of materials which have high static generating characteristics. Materials of 100 percent polyester, nylon, rayon, silk, or wool are highly static-producing. Wool socks, glove inserts, and caps, as well as undergarments of synthetic fabrics or silk are less of a hazard. Nylon field jacket liners should not be worn as an outer garment. Cotton or cotton-synthetic blend materials are preferred.

(5) *Static electrical potential discharge or equalization.* Personnel, regardless of the type of clothing worn, can collect a charge of static electricity by being in contact with moving nonconductive substances or coming in contact with a mass that has been previously charged. Therefore, personnel must be particularly careful to discharge their static electrical potential or equalize it to that of the explosives item before the item is handled.

(6) *Garment removal.* Garments will not be put on or removed while engaged in explosives operations. This reduces the generation of static charges caused by physical separation of materials. If outer garments need to be removed,

personnel will step out of the immediate area of operation, remove the garment, ground themselves, then reenter. Workers shall not unfasten Velcro fasteners while present in an explosives operation.

b. Static electricity dissipation.

(1) The grounding method generally used to eliminate or reduce the hazard from static electricity is to provide an electrically continuous path to the earth electrode subsystem.

(a) When all of the objects are conductive, they can be grounded by electrically connecting all parts to a common ground conductor.

(b) When deemed necessary, effective grounding must include the exterior and the contents of a container.

(c) Electrical continuity may be broken by oil on bearings, paint, or rust at any contact point. To get a continuous circuit, grounding straps should be used to bridge such locations. Equipment in contact with conductive floors or table tops is not adequately grounded.

(d) Static grounds will not be made to telephone grounds; electrical conduit systems; gas, steam, water, or air lines; sprinkler systems; or air terminals of lightning protection system (LPS) (connection to the down conductor of the system at the ground level is authorized).

(2) Static electricity accumulations and subsequent discharges are usually impossible if the relative humidity is above 60 percent. Where humidification techniques are used to prevent static electricity accumulations, perform a daily preoperational check of the humidity levels before starting work. However, certain materials such as metallic powders and some of the pyrotechnic mixtures cannot be exposed to air with 60 percent or higher relative humidity because of the possibility of spontaneous ignition.

(3) Ionization is electrical neutralization and serves as an effective method of removing static charges from certain processes and/or operation. Methods of application can be found in NFPA Recommended Practice 77. Ionization methods of removing static charges must not be used in hazardous locations as defined in the National Electrical Code, NFPA 70, and paragraph 6–2 of this pamphlet. Unless the MACOM commander gives approval, do not use radioactive ionization sources due to the potential for radioactive material contamination during an explosives accident or pyrotechnic fire.

c. Conductive floors, mats, and runners. The combination of conductive floors and shoes provides the static electricity charge a dissipation path to the earth electrode subsystem.

(1) *General requirements.*

(a) Conductive floors, plates, mats, and runners will be used together with conductive footwear to protect personnel at operations involving items and materials having an electrostatic sensitivity of 0.1 joule or less. A list of items and materials that are sensitive to this level are listed in paragraph 6–10*a* (3)(a) through 6–10*a*(3)(c). Operations involving such items as loosely unpacked ammunition with electric primers, exposed electro-explosives devices, electrically initiated items with exposed electric circuitry, and other hazardous materials will be analyzed on a case-by-case basis to determine if conductive floors, plates, mats, runners, and footwear are required. This analysis will include an assessment of the electrostatic sensitivity of the item and the compensatory measures to be employed.

(b) Conductive floors are not required throughout a building or room if the hazard is localized. In these cases, conductive mats or runners may be used where appropriate. These mats or runners will be subject to all the specifications and tests that apply to conductive floors.

(2) *New installation or renovation requirements* Conductive floors must be constructed of nonsparking material such as lead, conductive rubber, or conductive flooring composition and must meet the following requirements:

(a) The surface of the installed floor must be free from cracks and reasonably smooth. The surface material must not slough off, wrinkle, or buckle under operating conditions. Conductive tiles are not recommended in areas where

explosives dust can cause contamination. The large number of joints and the tendency of tiles to loosen can allow explosives dust to become lodged. The tiles are not easy to clean using normal cleanup procedures.

(b) The conductive floors must be compatible with the materials to be processed.

(3) *Conductive floor bonding requirements.*

(a) Conductive floors will be bonded to the earth electrode subsystem. The bonding material will be selected in accordance with paragraph 6–13*d* below.

(b) On former Naval installations conductive floors will be bonded to the secondary girdle. The bonding material will be selected in accordance with paragraph 6–13d.

(4) *Visual inspection requirements.*

(a) Visual inspection interval. Conductive floors will be inspected daily during operations.

(b) Visual inspection procedures. (See para C–2 and table 6–1 for inspection procedures.)

(5) *Electrical test requirements.*

(a) Electrical test intervals. Conductive floors will be tested at the completion of installation, at the completion of renovation, and at least semi-annually thereafter.

(b) Electrical test procedures. Electrical tests will be conducted only when the room or area is free of exposed explosives and/or flammable gas mixtures. (See para C–3 and table 6–1 for testing procedures.)

(6) *Maintenance of conductive floors.* Conductive floors will be kept clean, dry, and free of nonconductive material. Soaps, detergents, and solvents that leave a residue will not be used to clean conductive floors.

d. Conductive footwear.

(1) *General requirements.* Personnel who work upon conductive flooring, conductive mats, or conductive runners where the requirements in *c* (1)(a) above apply, must wear nonsparking conductive footwear. Personnel from other departments or visitors who enter these areas and who walk on conductive flooring materials also must wear nonsparking conductive footwear (conductive overshoes with ankle straps may be used). Legstats are acceptable for visitors or transients only, as long as their basic footwear is of nonsparking construction. Under no circumstances will personnel working on electrical equipment or facilities wear conductive-sole safety shoes or other conductive footwear.

(2) *Conductive footwear requirements.*

(a) Conductive shoes with conductive composition soles will meet ANSI Safety Standard for Safety-Toe Footwear, Z41.1 and MIL-S–3794.

(b) Conductive footwear requires care to retain its conductive properties. When conductive footwear is not in use, it should be stored in lockers close to the room where it will be worn. Employees who have been issued conductive footwear will not wear it from the workplace to their homes and return. A thin layer of dust or wax may insulate conductive footwear from the floor.

(c) Only conductive materials will be used to repair conductive soled shoes. Conductive shoes will be thoroughly cleaned before being repaired.

(3) *Visual inspection requirements.*

(a) Inspection intervals. Conductive footwear will be inspected every day before use.

(b) Inspection procedures and criteria. (See para C–2 and table 6–1.)

(4) *Electrical test requirements.*

(a) Test intervals. Conductive footwear will be tested at the time issued and daily before use.

(b) Test procedures. (See para C–4 and table 6–1.)

e. Conductive tables and table tops. The requirements for conductive floors will apply to conductive tables and table tops.

f. Conductive belts.

(1) *New installation, renovation, and general requirements.*

(a) Conductive conveyor belts will meet the requirements of International Standard Organization (ISO) 284, Conveyor Belts, Electric Conductive, Specifications and Method of Test.

(b) Conductive V-belts will meet the requirements of ISO 1813–Antistatic V-Belts Electric Conductive—Specifications and Method of Test at initial installation.

(2) *Bonding requirements.*

(a) The belt must be electrically continuous.

(b) The combination of the belt tension and the weight on the belt provides the bonding of the belt to the pulleys and rollers.

(c) The static electricity charge dissipation from the belt to the pulley or roller will also dissipate through the bearings to the equipment. The equipment in turn must be bonded to the earth electrode subsystem. Static combs or

sliding contacts may be used between pulleys and roller to the equipment housing. Bonding straps can be used on the equipment housing. Braided straps will be required on equipment that vibrates.

(d) On former Naval installations this subsystem must be bonded to the secondary girdle.

(3) *Visual inspection requirements.*

(a) Inspection intervals. Conveyer belt and v-belt systems will be inspected at installation or renovation and daily before use thereafter.

(b) Inspection procedures and criteria. (See para C–2 and table 6–1.)

(4) *Electrical test requirements.*

(a) Test intervals. All conveyor belt systems will be tested at the time of installation or renovation and at least semi-annually. Conductive v-belts will be tested at time of installation (para C–6), but need not be tested after installation.

(b) Test methods. (See para C–5 and table 6–1.)

g. Conductive legstats.

(1) *General requirements.* Legstats will not be used in place of conductive shoes. Only transients will use legstats when they require conductive footwear. Legstats will be used in pairs (one on each leg) when they are required.

(2) *Visual inspection requirements.*

(a) Inspection intervals. Legstats will be inspected upon receipt and daily before use.

(b) Inspection procedures and criteria. (See para C–2d and table 6–1.)

(3) *Electrical testing requirements.*

(a) Test intervals. Legstats will be tested upon receipt and daily before use.

(b) Test criteria. (See para C–7 and table 6–1.)

h. Conductive wriststats.

(1) *General requirements.* As a general rule, wriststats should not serve as the primary method of dissipating electrostatic charges from the human body. Wriststats may be a supplemental method when operations require more than normal precautions against electrostatic discharge. Wriststats may be used as the primary method of electrostatic control when directed by Army publications.

(2) *Visual inspection requirements.*

(a) Inspection intervals. Wriststats will be inspected upon receipt and daily before use.

(b) Inspection procedures and criteria. (See para C–2d and table 6–1.)

(3) *Electrical testing requirements.*

(a) Test intervals. Wriststats will be tested upon receipt and daily before use.

(b) Test criteria. The resistance value will be provided in the publication that requires the use of wriststats. (See table 6–1 and C–8.)

i. Forklift trucks. Requirements, inspection, and test procedures are in TB 43–0142.

j. Machinery and equipment

(1) *General requirements.* All machinery and equipment such as mixers for pyrotechnic, propellant, and explosive compositions, screening and sifting devices, assembly and disassembly machines, elevators, defuzing machines, presses, hoppers, and all associated equipment involved in loading or processing explosives or explosives materials will be bonded to the earth electrode subsystem.

(2) *Visual inspection requirements.*

(a) Inspection intervals. Machinery and equipment will be inspected upon receipt and daily before use.

(b) Inspection procedures and criteria. (See para C–2e and table 6–1.)

(3) *Electrical testing requirements.*

(a) Test intervals. Machinery and equipment will be tested upon receipt and as specified in table 6–1.

(b) Test criteria. The resistance value between the machinery and equipment and the earth electrode subsystem will be as specified in paragraph C–9 and table 6–1.

k. Spray painting operations. During paint spraying operations, static electricity dissipation will be accomplished as required in NFPA 33 and/or NFPA 77. Electrostatic paint systems will not be used or installed in explosives areas.

l. Aircraft loading and unloading operations. Aircraft, both rotary and fixed wing, will be grounded when loading or unloading ammunition or explosives. The resistance value between the aircraft and the earth electrode subsystem will be as specified in table 6–1. For sling loading ammunition and explosives, see FM 55–450–1.

m. Ground grab bars. Ground grab bars may be installed just outside the entrance doors to operating buildings or other buildings or structures where special hazards exist. A ground grab bar consists of a length of noncorroding conductive pipe fitted in brackets and connected to ground. All persons entering structures equipped with grab bars will momentarily grasp the bar to dissipate any possible accumulation of static electricity. To prevent reaccumulation of a static charge, conductive floors, tables, footwear, and so forth, must be used.

n. Field expedient grounding. There will be times when, due to operational necessity, items such as conductive footwear and/or flooring will not be available. Appendix E provides methods that may be used in these situations.

6–11. Ordnance grounds (static grounds)

Ordnance grounds are used to ensure that electric currents do not flow between ordnance components when they come in contact or are assembled. These currents can be produced by common mode voltages induced in ground loops, electrostatic discharge of one component into another, and potential differences created in the facilities ground system due to direct lightning strikes or near misses.

a. Ordnance grounds are electrically separated from all other ground systems (and objects connected to them). At former Navy installations, ordnance grounds will be connected to the secondary ground girdle at a single point. Each ordnance ground subsystem will be connected to the secondary ground girdle at a single point.

b. Where they exist, ordnance grounds will be maintained.

6–12. Instrument grounds

Instrument grounds are used to provide error-free operation of sensitive electronic instruments.

a. Instrument grounds are electrically separated from all other ground systems (and objects connected to them). At former Navy installations, instrument grounds will be connected to the secondary ground girdle at a single point.

b. Instrument grounds at those installations having them will be maintained.

Section III
Grounding

6–13. Explosives facility grounding

a. Explosives facilities will be provided with a ground system to provide personnel, equipment, and facility protection. Personnel safety is provided by low impedance grounding and bonding for personnel, equipment, metallic objects, and piping so as to prevent voltages sufficient to cause a shock hazard or initiate explosives within the facility.

b. A facility ground system is composed of the earth electrode subsystem and one or more of the following subsystems:

(1) Static electricity charge dissipation subsystem.

(2) Ordnance ground subsystem.

(3) Instrument ground subsystem.

(4) Lightning protection subsystem.

(5) Structural ground subsystem.

(6) Fault protection subsystem.

(7) Power service grounds subsystem.

c. The explosives facility grounding system at all Army installations will be visually inspected and electrically tested at the required intervals for values specified in table 6–1.

(1) General requirements are as follows:

(a) The installation safety officer, unless an alternate officer is specifically designated by the installation commander, will maintain the inspection and test reports and/or records for a period of 30 years.

(b) Personnel responsible for maintenance, inspection and testing must be familiar with the fundamentals described in NFPA 780 and herein as they relate to explosives facilities to assure the requirements of this pamphlet are met.

(2) All required maintenance will be performed on all grounding systems.

(3) Results of all electrical tests will be recorded and reported to the appropriate office for resolution.

d. Grounding system material will be in accordance with NFPA 70, Article 250, Part J, paragraphs 250–91 through 250–99, inclusively.

6–14. Earth electrode subsystem

The earth electrode subsystem establishes the electrical connection between the facility and earth. This connection is necessary for static electricity dissipation, useful in power fault protection, and aids in minimizing electronic noise from communications and instrumentation. It is a network of electrically interconnected rods and/or cables installed to establish a low resistance contact with earth. Electrodes are usually buried or driven beneath the earth's surface. Older installations may also find that buried metal plates, cones, pipes, grids, wells, and/or grounded railroad tracks are used as the earth electrode subsystem. Only ground rods, ground loops, combinations, and variations thereof and salt water grounds are authorized for new construction or major renovation projects.

a. Earth electrode subsystem general requirement. Earth electrodes will be placed at uniform intervals about the protected facility as required; grouping of earth electrodes on one side of a facility is prohibited. Earth electrodes will be set not less than 3 feet or more than 8 feet from the structure. The type and size of the earth electrode subsystem will depend on local soil conditions. Test borings and/or soil resistivity tests performed in the areas before construction will be used for deciding on an adequate earth electrode system. All connections will be tested for electrical resistance,

and the entire earth electrode subsystem will be tested to assure that resistance to earth meets the requirements of table 6–1.

b. Designing or renovating earth electrode subsystems. The subsystem must be tailored to reflect the characteristics of the site and requirements of the facility. It must be properly installed and steps must be taken to assure that it continues to provide a low resistance connection to earth throughout the life of the facility. To achieve these objectives—

(1) Before beginning the design, conduct a survey of the site where the earth electrode subsystem is to be installed. Through this survey, determine the resistivity of the soil, identify significant geological features, gather information on architectural and landscape features which may influence the design of the subsystem, and review local climate effects. (If possible, conduct this survey in advance of the final site selection to avoid particularly troublesome locations.)

(2) As the first step of the site survey, measure the resistivity of the soil at several points over the area of the planned facility. Even the smallest facility, in so far as the earth electrode subsystem is concerned, will affect an area at least 15 meters by 15 meters (50 feet by 50 feet). For larger facilities, the area is assumed to extend at least 6 meters (20 feet) beyond the basic building or structural outline; that is, the ground floor plan. The soil resistivity must be known over the area encircled or covered by the earth electrode subsystem.

(3) Design an earth electrode subsystem appropriate for the site.

(4) Install the subsystem in accordance with the recommended procedures.

(5) Finally, measure the resistance to earth of the subsystem to verify that it meets the goals or design specifications.

c. Selection of earth electrode type. Only ground rods, ground loops, combinations and variations thereof, and salt water grounds are authorized for new or renovation projects.

(1) Acceptable resistance to earth values are easiest to achieve when ground rods are driven to the depth determined by the soil resistivity test.

(2) A ground loop (counterpoise) subsystem will be installed if one of the following conditions are met:

(a) General requirements. The minimum number of ground rods are driven to the depth determined by the soil resistivity test and the required resistance to earth value is not achieved.

(b) Grounding system other than lightning protection. Drive, as a minimum, two additional ground rods (see table 6–2 for minimum ground rod requirements) to the depth determined by the soil resistivity test. Acceptable resistance to earth values are still not achieved on two of three driven rods.

(c) Grounding systems for LPS. Drive, as a minimum, one additional ground rod (see table 6–2 for minimum ground rod requirements) to the depth determined by the soil resistivity test. Acceptable resistance to earth values are still not achieved on two of three driven rods.

(d) Excessively long ground rods. The results of the soil resistivity test and cost analysis may indicate that installing ground rods would not be cost effective due to the need for excessively long ground rods. The results of the soil resistivity test and cost analysis must be kept on file.

(3) *Grounding wells.* Access to the earth electrode subsystem will be provided by installing one or more grounding wells at each new facility or at facilities undergoing major renovation. Acceptable types of grounding wells are shown in figure 6–1.

d. Bonding requirements

(1) Compression clamps are the only permissible bonding method in grounding wells.

(2) All earth electrode subsystems protecting a facility will be bonded together. However, the following criteria applies where an earth electrode subsystem is installed and bonded to the existing earth electrode subsystem:

(a) All earth electrode subsystems will meet the most stringent resistance to earth value required for that facility.

(b) All earth electrode subsystems will be bonded together when maintenance is performed on the facility's grounding system.

(c) When a facility is renovated, all earth electrode subsystems will be bonded together.

e. Visual inspection requirement. (See para B–2 and table 6–1.)

f. Electrical test requirements. (See para B–4 and table 6–1.).

g. Ground rods. (figs 6–2 and 6–3.) Ground rods are any vertical rods or pipes driven into the ground. Ground rods are normally used where bedrock is more than 10 feet below grade. Ground rods are manufactured in one-half inch to one inch diameters and in lengths of 5 to 40 feet.

(1) New installation or renovation requirements

(a) Ground rods will meet the requirements of NFPA 70 except when bonded to a lightning protection subsystem. They then will not be less than three-quarters of an inch in diameter and 10 feet in length. Rods will be copper-clad steel, solid copper, or stainless steel. Ground rods will be free of paint or other nonconductive coating. Ground rods will be located clear of paved surfaces, walkways, and roadways. Rods will be driven so that the tops are at least 12 inches below finished grade, and located 3 to 8 feet beyond the perimeter of the building foundation. Shallow topsoil over bedrock or dense coral may make it impractical to bury ground rods or a counterpoise to the required level below grade. In these instances, using extended down conductors or buried open plates as described in chapter 3 of NFPA 780 provides an acceptable alternative to vertical burial of 10' long rods. Drive stud bolts protect threaded area of rods

when driving the rods into the ground. Threaded couplings will be used when it is necessary to drive multiple lengths of ground rods into the earth.

(b) Ground rod quantity requirements. (See table 6–2.)

(2) *Visual inspection requirements.* (See para B–2 and table 6–1.)

(3) *Electrical test requirements.* (See para B–4 and table 6–1.)

h. Ground loop (counterpoise). (See figs 6–4 and 6–5.) Ground loops consist of one or more buried cables (primary and secondary girdles) that completely encircle a facility.

(1) *New installation or renovation requirements.* Ground loop cable will not be less than 1/0 American Wire Gage (AWG) stranded copper or copper clad steel cable. The size of any strand will not be less than 17 AWG. In areas where the soil is highly corrosive, larger cable will be used. The cable will be buried not less than 30 inches below grade and not less than 3 feet or more than 8 feet from the building foundation or footing. All bends in the cable will not be less than 90 degrees. A minimum of two ground rods are required with a ground loop. One ground rod will be installed at each diagonal corner of the ground loop. (Existing ground loop systems built under Navy specifications may have separate masts at each of the four corners of the ground loop with two each ground rods at each mast. This configuration meets Army standards.)

(2) *Visual inspection requirements.* (See para B–2 and table 6–1.)

(3) *Electrical test requirements.* (See para B–4 and table 6–1.)

i. Grid. A grid (fig 6–5) is a system of buried interconnecting ground wires (cables) forming uniform rectangles either around or under a protected facility or group of facilities.

(1) *New installation or renovation requirements.* A grid system will not be used when buildinging new explosives facilities. Existing grid systems will be maintained using the same criteria defined for new installation or renovation of ground loop subsystems.

(2) *Visual inspection requirements.* (See para B–2 and table 6–1.)

(3) *Electrical test requirements.* (See para B–4 and table 6–1.)

j. Radial systems. A radial system (fig 6–6) is a buried cable at each down conductor that extends radially from the facility.

(1) *New installation or renovation requirements.* Radial system will not be used in building new facilities. Existing radial systems will be maintained using the same criteria defined for new installation or renovation of ground loop subsystems.

(2) *Visual inspection requirements.* (See para B–2 and table 6–1.)

(3) *Electrical test requirements.* (See para B–4 and table 6–1.)

k. Plate, cone, water pipe, and railroad track systems (fig 6-8). The plate or cone system consists of a series of buried plates or cones attached to each down conductor at a facility. Water pipe or grounded railroad tracks systems also exist at some installations.

(1) *New installation or renovation requirements.* Plate, cone, water pipe, and railroad track systems will not be used in the construction of new facilities. When plate, cone, water pipe, and railroad systems become unserviceable, they will be replaced using ground rods or ground loop systems as appropriate.

(2) *Visual inspection requirements.* (See para B–2 and table 6–1.)

(3) *Electrical test requirements.* (See para B–4 and table 6–1.)

Section IV
Electromagnetic Radiation

6–15. Hazards of electromagnetic radiation to electro-explosive devices (EEDs)

a. General requirements

(1) Unless a specific and valid exception has been authorized for the given hazard, use the criteria in this paragraph.

(2) If technically qualified personnel at the local level can not solve an electromagnetic hazard to EEDs, obtain consultation and measurement survey assistance from the higher headquarters through command safety channels.

b. Electromagnetic radiation hazards

(1) EEDs are initiated electrically. One aspect of possible hazards is the accidental firing of EEDs by stray electromagnetic energy. A large number of these devices are initiated by low levels of electrical energy and are susceptible to unintentional ignition by many forms of direct or induced stray electrical energy, such as lightning discharges, static electricity, or triboelectric (friction-generated) effects, the operation of electrical and electronic subsystems onboard weapon systems, and radio frequency (RF) energy from ground portable and airborne emitters (transmitters).

(2) Hazards from lightning discharges are covered in chapter 12. Lightning protection systems and requirements normally preclude the inadvertent initiation of EEDs by direct lightning strikes.

(3) Stray energy, such as transients and other forms of induced energy, can be imposed upon circuits affecting EEDs

from other subsystems by various methods. Examples are inductive or capacitive coupling from other cabling; sneak ground circuits; defective components or wiring; and errors in design, modification, or maintenance.

(4) EEDs are susceptible to initiation by exposure to the radiated fields of RF emitters. The degree of susceptibility depends on many variables. These variables are the threshold firing level of the EED; the ability of the leads, circuit, or installation to capture RF energy; the type and characteristics of RF energy; and methods of coupling which can introduce this energy into the EED.

c. Safe separation distance criteria. The separations given in table 6–3 should be used as a guide in setting up safe separation distances between EEDs and the transmitting antenna of all RF emitters. (More accurate distance calculations can be made using the procedures in table 6–4 and g below.) These criteria apply generally to critical areas involving explosives assembly, disassembly, testing, loading, and unloading operations. The distances are based on a worst case situation; that is, most sensitive EEDs presently in the inventory, unshielded, having leads or circuitry which could inadvertently be formed into a resonant dipole, loop, or other antenna. Where EEDs are in less hazardous configurations, use the procedures outlined in d below.

d. Shorter distance considerations. A lesser safe separation distance may be allowed when EEDs are not in an exposed condition. Before the safe separation distance is reduced, there must be an analysis of local conditions, type of operations, and the inherent RF protection afforded EEDs in a given situation. Use the formulas in table 6–4 for calculating safe separation distances from EEDs in specific configurations. Other possible configurations are:

(1) For unknown worst case situations or exposed EEDs, use table 6–4, column A.

(2) EEDs may be stored or transported in metal containers with their leads twisted (shorted) together. Such items normally would be safe in almost any military electromagnetic environment; however, due to discontinuities, thickness of metal, or nonconducting gaskets the inherent shielding effectiveness of the container may be degraded. Use table 6–4, column C, to calculate recommended safe separations and power densities.

(3) For EEDs stored or transported in nonmetallic containers with their leads twisted (shorted), use table 6–4, column B, to calculate recommended safe separations and power densities.

e. Precautionary procedures. Leave EEDs in their containers until ready for use. Be careful not to untwist leads into the form of a resonant dipole, loop, or other effective antenna. Do not remove shorting clips until the EED is actually ready to be installed.

f. Power density criteria. When electrical characteristics of the EEDs in question are not known or when the minimum safe separation distances cannot be complied with because of lack of real estate or other limitations, a power density/field intensity survey should be made. These measurements are more exacting methods of determining a hazard, since actual conditions are involved rather than worst case conditions which are assumed for distances in table 6–3.

g. Minimum safe distance. When using the data from tables 6–3 and 6–4, the following minimum safe distance information is to be used:

(1) A minimum safe distance of 1.5 meters (5 feet) is allowed for citizens band radios (walkie-talkies) (26.96 to 27.23 Mhz) which have less than 5 watts in power.

(2) A minimum safe distance of 21 meters (69 feet) is allowed for 2–way mobile units in VHF (150.8 to 161.6 Mhz) and 13 meters (43 feet) for 2–way mobile and fixed station units in UHF (450 to 460 Mhz), which have less than 180 watts in power.

(3) A minimum safe distance of 88 meters (290 feet) is allowed for major VHF 2–way mobile and fixed station units in 35 to 44 Mhz range which have less than 500 watts in power.

(4) A minimum safe distance of 35 meters (115 feet) is allowed for VHF 2–way fixed units in 150.8 to 161.6 Mhz range which have less than 600 watts in power.

h. Necessary information. When using the data from tables 6–3 and 6–4, the following information is to be used:

(1) Maximum power to amateur radio mobile units is 1,000 watts.

(2) The maximum power for some base stations in 42 to 44 Mhz band and 1.6 to 1.8 Mhz band is 10,000 watts.

(3) The present maximum power for channels 2 to 6 and FM is 100,000 watts.

(4) The present maximum power for channels 7 to 13 is 316,000 watts.

(5) The present maximum power for channels 14 to 83 is 5,000,000 watts.

Table 6–1
Grounding system inspection and test requirements

Grounding system component	Visual inspection interval	Electrical test	
		Interval	Required resistance
Earth electrode subsystem[2,3,4] ground rods, ground loop, grid, radial, plate, cones, railroad track, water pipes	6 months		25 ohms
Static electricity charge dissipation subsystem	Daily before use		25K to 1 Megohm
Conductive floors, mats, table, tops, plates, runners [9]			
Metal mats[8,9]			
Conductive footwear, in use (on wearer)[9] Series connection	Daily before use	6 months	25K to 1 Megohm, 1 Megohm Max
Conductive belts, Conveyer belts	Daily before use	6 months	5 Megohms max
V belts	Daily before use	At installation	600K ohms max at initial installation
Conductive hoses	Daily before use	6 months	250K ohms max
Legstats[9]	Daily before use	Daily before use	40K to 250K
Wristats[5,9]	Daily before use	Daily before use	25K to 1 megohm
Forklifts[6], Aircraft loading pads	12 months	12 months	10K ohms
Equipment & machinery[10]	Daily before use	6 months	2 ohms
Ordnance ground subsystem	6 months	24 months	25 ohms
Instrument ground subsystem	6 months	24 months	25 ohms
Lightning protection subsystem (bonding check)	6 months	24 months	1 ohm

Notes:

[1] Only visible/accessible portions of the earth electrode subsystems will be inspected.

[2] In addition to the regular inspection/test interval, earth subsystems will be tested after initial installation, maintenance or renovation. A three point fall of potential test is not required on earth covered magazines. The lightning protection electrical test for an earth covered magazine will consist of a bonding check only.

[3] The required resistance value is determined by what the earth electrode subsystem is bonded to. When more than one subsystem is bonded together, the most stringent requirement applies.

[4] Ground loop systems are required to exhibit a resistance to earth less than or equal to 25 ohms. When a higher resistance is measured, the test crew will perform a full three-point fall-of-potential test to determine if optimum probe locations will lower the result to an acceptable level. If the result is still above 25 ohms, the test crew will perform a four-point earth resistivity test to determine if the high reading is due to soil conditions. If high soil resistivity is the reason for the high initial reading, record this fact in the test record, and use this soil resistivity reading for a new baseline value for future tests to detect any system deterioration. If the soil resistivity is not the reason for the high resistance to earth, perform system maintenance.

[5] Testing of wristats shall be conducted with a wrist strap tester or an appropriate digital readout ohmmeter. Wrist strap testers shall be used in accordance with the manufacturer's instructions.

[6] Forklift inspection and test procedures are in TB 43–0142, Safety Inspection and Testing of Lifting Devices. (MIL-T–21869 provides procedures for testing forklift discharge straps.)

[7] The inspection and test procedures are found in the following appendixes: a. Appendix B, earth electrode subsystems; Appendix C, static electricity dissipation subsystems; c. Appendix D, lightning protection subsystems (bonding tests).

[8] Test from one point on the metal mat to ground. It may be necessary to install a resistor between the metal mat and ground to achieve the required resistance.

[9] When utilizing electrically energized tools/equipment (110V or 220V), ground fault interruptors (GFIs) must be installed in the electrical circuits for personnel protection.

[10] Equipment bonds will be visually inspected together with scheduled or unscheduled maintenance entries into the bay area for operations that are continuous (three shifts, 24 hours per day), remotely controlled, conducted in separate bays, and can potentially create toxic atmospheres within the operating bay.

Table 6–2
Ground rod quantity requirements

Type of system	Minimum number of ground rods
Power	1
Fault	1
Instrument	1
Ordnance	1
Static	1
Communication	1
Lightning protection	2
Structure	2

Table 6–3
Minimum safe distance from transmitter antennas

Average or peak transmitter power in watts	Minimum distance to transmitter in meters/feet
0 30	30/98.4
31 50	50/164.1
51 100	110/360
101 250	160/525
251 500	230/755
501 -1,000	305/1,000
1,001 -3,000	480/1,575
3,001 5,000	610/2,001
5,001 20,000	915/3,002
20,001 -50,000	1,530/5,020
50,001 -100,000	3,050/10,007
100,001-400,000	6,100/20,014
400,001-1,600,001	12,200/40,028
1,600,000-6,400,000	24,400/80,056

Notes:

* When the transmission is a pulsed or pulsed continuous wave type and its pulse width is less than 10 microseconds, the power column indicates average power. For all other transmissions, including those with pulse widths greater than 10 microseconds, the power column indicates peak power.

Safe Separation Distance Equations

UN-SHEILDED MUNITION		SHIELDED MUNITION	
UP TO 2.3 KHz	$D=0.093\sqrt{PG}$	UP TO 73 KHz	$D=0.093\sqrt{PG}$
2.3 KHz to 450 KHZ	$D=39.7F\sqrt{PG}$	73 KHz to 450 KHz	$D=1.26F\sqrt{PG}$
450 KHz to 400 MHz	$D=18\sqrt{PG}$	450 KHz to 400 MHz	$D=0.6\sqrt{PG}$
400 MHz to 75,000 MHz	$D=\frac{7137}{F}\sqrt{PG}$	400 MHz to 2,400 MHz	$D=\frac{226}{F}\sqrt{PG}$
ABOVE 75,000 MHz	$D=0.093\sqrt{PG}$	ABOVE 2,400 MHz	$D=0.093\sqrt{PG}$

WHERE

D = Safe Separation Distance to Transmitter in Feet.
P = Output Power to Transmitter in Watts.
G = Numerical Gain of Transmitter Antenna.
F = Frequency in MHz.

TABLE ASSUMES

1. **NO-FIRE CURRENT** = 10 mA.

2. **SAFETY FACTOR** = 10dB or 3.16 (numerical).

3. **EED'S LEADS** = Tuned to match the transmitter's frequency.

4. **SHIELDING** = If metallic, it provides a minimum of 30 dB or 32 times (numerical) of shielding. Non-metal packs provide no shielding.

5. At no time, should personnel or munitions be exposed to more than 200 volts/meter (rms).

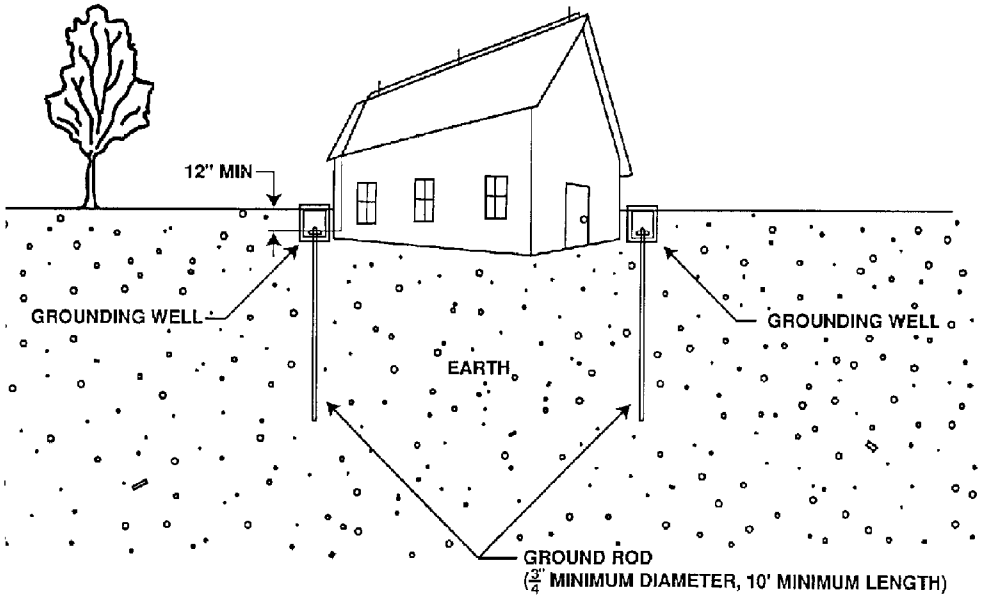

Figure 6-1. Typical Ground Rod Installation

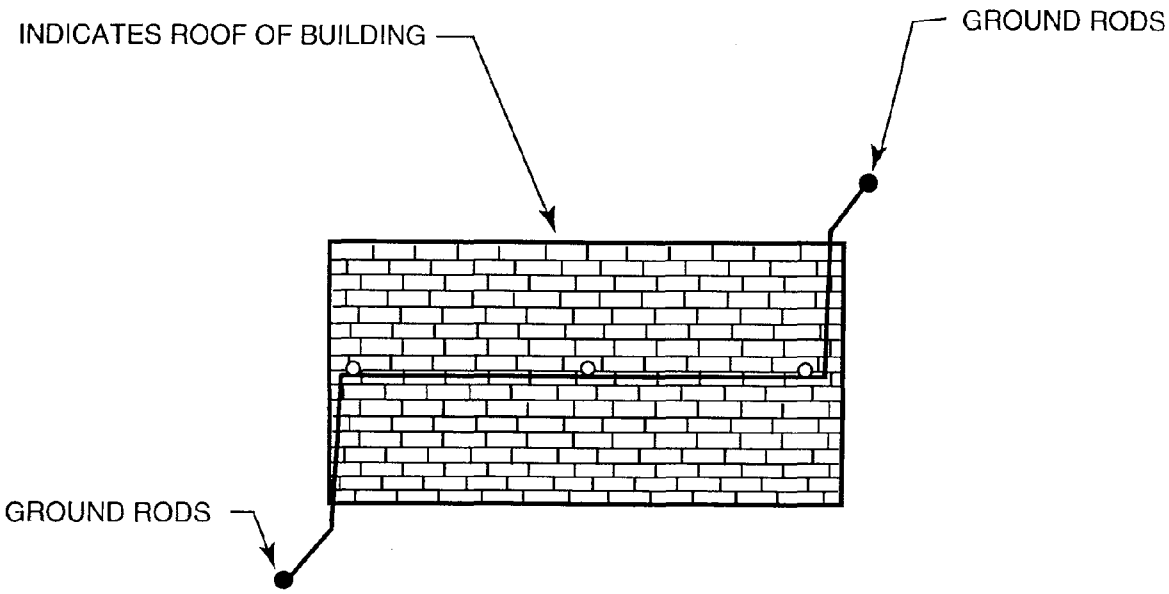

Figure 6-2. Typical multiple ground rod installation

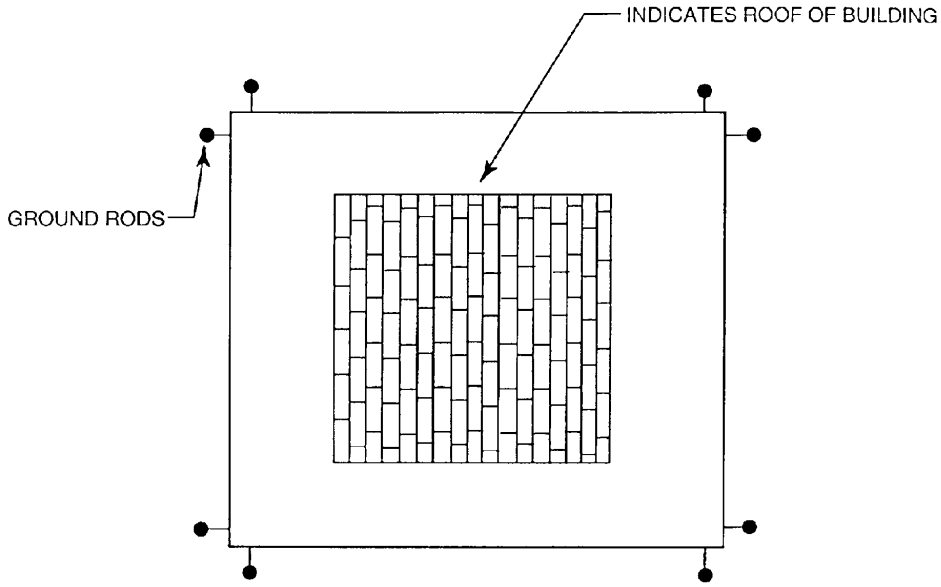

1. 8 GROUND RODS - 2 PER CORNER.

Figure 6-3. Typical ground loop installation

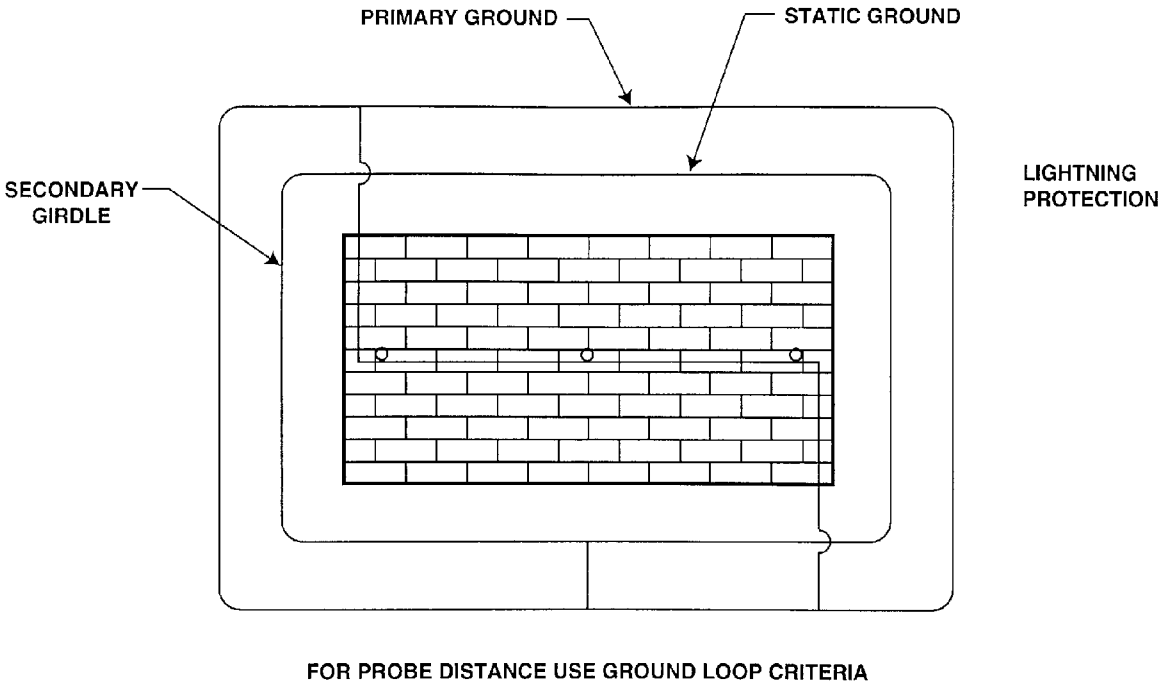

Figure 6-4. U.S. Navy designed earth electrode subsystem

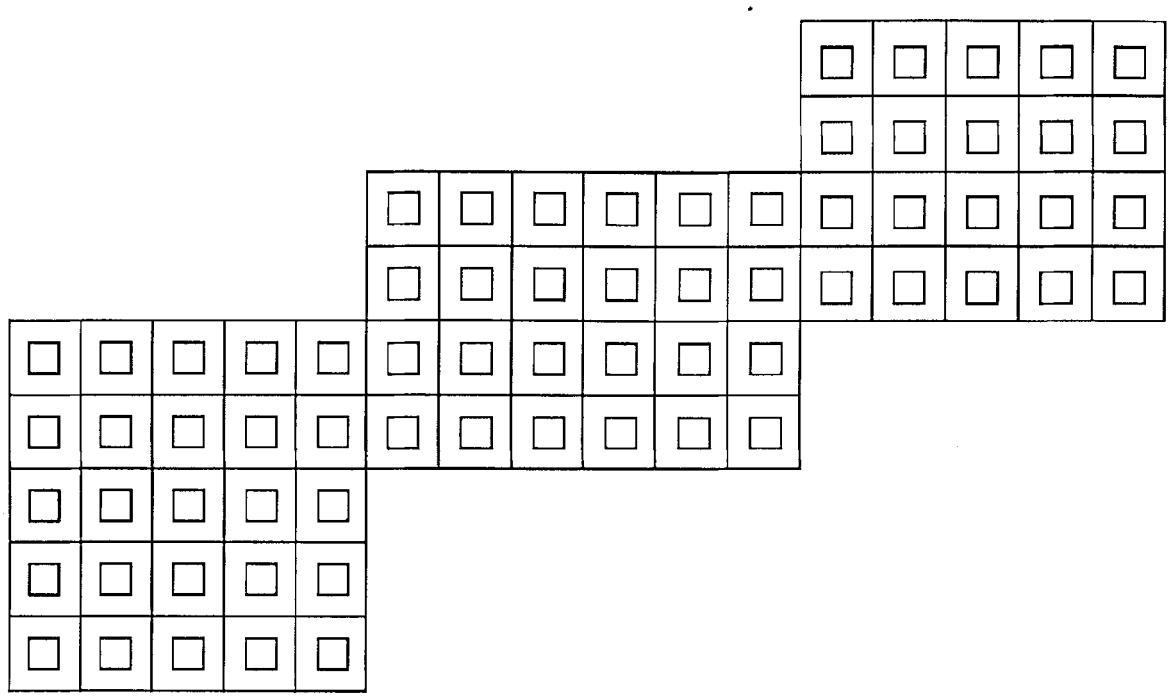

Figure 6-5. Typical grid installation

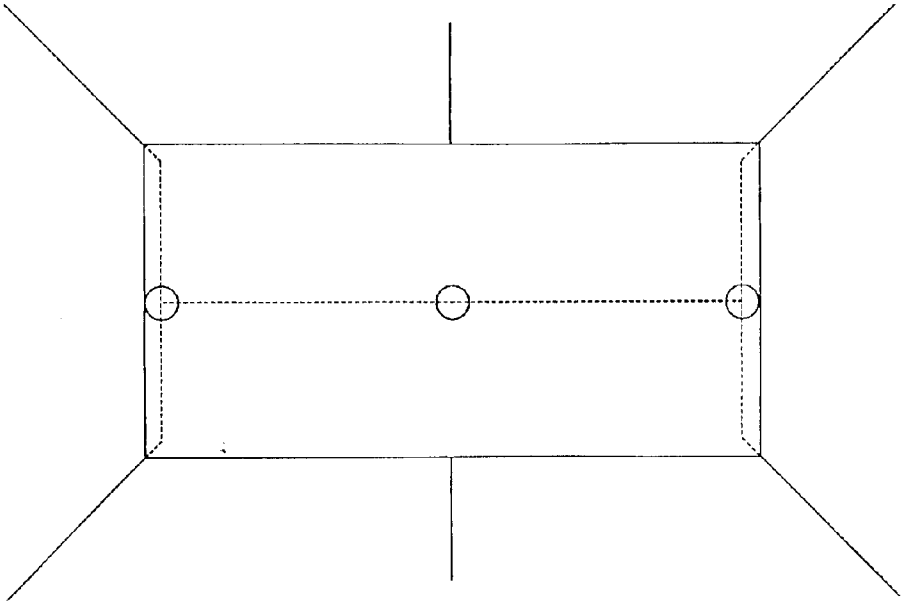

Figure 6-6. Typical radial installation

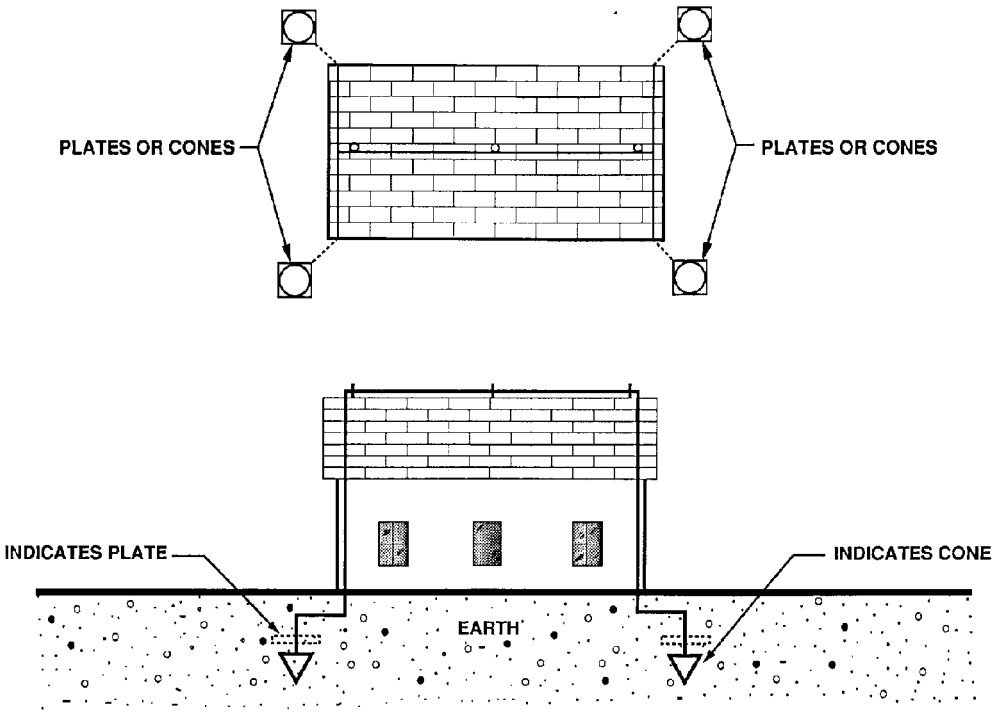

Figure 6-7. Typical buried plates or cones installation

Chapter 7
Transportation

Section I
General requirements

7–1. General information

Shipments of Army explosives and other dangerous articles by military conveyances are governed by AR 385–64, this pamphlet, other referenced military publications, and, outside the United States, host country regulations. Shipments of military explosives and other dangerous articles are governed by DOT regulations and AR 55–355 in the United States and by host country regulations outside the United States. In the absence of host country hazardous materials transportation regulations, AR 385–64 and this pamphlet apply to movements of ammunition and explosives.

7–2. Certification of personnel involved with transportation

All personnel involved with the classification, preparation of items and/or bills of lading, inspection of vehicles and/or shipments, loading or unloading of carriers, driving, or other duties that directly involve the transportation of ammunition or explosives require training and certification in accordance with AR 55–355 and DOT regulations.

7–3. Hazard classification

a. All ammunition or explosive items require a final or interim hazard classification before shipment. The Joint Hazard Classification System (JHCS) shall be used as the source for all DOD final hazard classified items.

b. Items without a final hazard classification must have an interim hazard classification assigned before shipment. The developing major command normally issues an interim classification for that item. The interim classification can be signed only by personnel delegated that authority. It may also be issued by USATCES as necessary. A copy of all

interim hazard classifications must be forwarded to the DDESB. The following is a list of items requiring an interim hazard classification before shipment:

(1) Developmental or test items.

(2) Standard items that have been modified.

(3) Ammunition items of foreign manufacture. (See chap 15 for rules governing captured ammunition.)

7–4. Preparation for shipment

a. Once a requirement for an ammunition shipment is identified, a person trained and certified in accordance with AR 55–355 verifies the hazard classification of the explosives item. This person then provides the following minimum information to the transportation officer:

(1) Proper shipping name.

(2) DOT hazard class.

(3) DOT labels required.

(4) DOT markings.

(5) DOD hazard class and division.

(6) DOD storage compatibility group.

(7) UNO number.

b. TB 9–1300–385 will be checked for suspensions/restrictions before offering an ammunition/explosive item for shipment.

7–5. Compatibility of explosives in transportation

a. The Army storage chart, (Table 4–3), and DOT transportation compatibility chart of CFR 49 differ. For example the Army storage compatibility chart allows more combinations by using the 'Z' storage criteria in Table 4–3. The DOT Highway, Rail and Sea compatibility tables do not have 'Z' compatibility. Additionally, the Army compatibility chart allows group 'N' to be stored with groups 'B,' 'F,' and 'G.' These combinations are not authorized for transportation by the DOT.

b. When ammunition, in either commercial or military conveyance, is to be transported along or across roads accessible to the public, DOT compatibility rules shall apply.

c. When ammunition is transported along or across roads that are not accessible to the public or roads that are clearly posted as prohibited to the public, ammunition may be transported according to the Army storage compatibility chart (Table 4–3). Blasting caps or detonators will not be transported with high explosives unless they are packed in an MK 663 MOD 0 container or equivalent container. Additionally, note 7 to Table 4–3 is not authorized for transportation.

d. When ammunition is transported in the training area on the installation, by troops on a training exercise using tactical vehicles, the vehicles may transport a mix of ammunition similar to that the vehicles would carry in combat, provided the vehicles do not cross or move along a route accessible to the general public. See section IV of chapter 14 for additional details.

e. Incompatible loads may be transported on public roads during times of war, contingency operations (not contingency exercises) or declared national emergencies when DOT Exemption 3498 has been invoked and the shipper complies with all provisions of that exemption.

Section II
Motor Vehicles

7–6. Vehicle general safety requirements

a. Government-owned motor vehicles used to transport hazardous materials must be inspected frequently by a

qualified person to see that mechanical condition and safety devices are in good working order. Periodic inspections of such vehicles will be documented using a DD Form 626, Motor Vehicle Inspection, or a similar local form.

b. Operators must conduct a daily inspection to determine that—

(1) Fire extinguishers are serviceable and of proper (10–BC or greater) rating. Extinguishers must have an intact inspection seal or a gage to verify that the extinguisher is full.

(2) Electric wiring is in good condition and properly attached.

(3) Fuel tank and piping are secure and not leaking.

(4) Brakes, steering, and other equipment are in good condition.

(5) The exhaust system is not exposed to accumulations of grease, oil, gasoline, or other fuels and has ample clearance from fuel lines and other combustible materials.

c. All lifting devices on vehicles used in explosives operations will have a serviceable mechanism designed to prevent the sudden dropping of the load if power fails.

d. All ammunition or explosives loaded on vehicles will be secure and stable before movement. Additionally, ammunition or explosives will be blocked and braced in accordance with approved drawings.

e. Placarding of explosives-laden vehicles gives firefighters an idea of the hazards that a vehicle contains. All vehicles hauling ammunition and/or explosives for the Army within the United States require proper DOT placards for offpost movement. Host country requirements for placarding will be followed outside the United States. Ammunition or explosives shipments that remain onpost may be placarded with the DOT placards, host country bilingual placards (outside the United States) or fire symbols detailed in this pamphlet, chapter 3. If the Army installation is an open post, DOT placards will be used in the United States.

7–7. Inbound motor shipment of ammunition and explosives

a. Inbound motor vehicles loaded with explosives, ammunition, or other hazardous material will be inspected by a competent person at a designated inspection station in accordance with AR 55–355 using DD Form 626. The inspection station will be remotely located from hazardous and populated areas.

b. When inspection reveals that an incoming tractor or trailer is in an unsatisfactory condition, the risk associated with the defect will be assessed.

(1) Under no circumstances will a tractor or trailer be allowed in the ammunition area with a defect which could endanger the area or the load.

(2) When a commercial truck is not allowed to enter the ammunition area, consider unloading it at the truck inspection station. If no other option is available, the tractor will be disconnected from the trailer and the tractor will be sent off-post for repairs. In this case, the installation will provide security for the trailer.

(3) The drivers or repairmen hired by the drivers will repair the trailer. No repairs which use a flame or spark producing device will be made to an explosives-laden trailer.

(4) In all cases, defective equipment on inbound shipments will be noted on the DD Form 626 and a copy provided to the transportation officer.

(5) At no time will an explosives-laden truck known to be defective be allowed to leave an Army installation.

(6) Seals on an inbound shipment will be checked against the numbers on the shipment paperwork. If the seal numbers do not agree or are missing, the shipment may be considered a suspect shipment. Suspect shipments will be taken to a remote location and thoroughly inspected for suspicious wires or packages on the exterior of the vehicle before opening the cargo compartment. If such wires or packages are found, no one will attempt to open the cargo compartment and the commander, security, and safety organizations will be notified immediately.

c. When explosives-laden vehicles cannot be dispatched to unloading points immediately, they must be moved to a holding yard or area. The holding yard or area must be sited in accord with the provisions of chapter 8.

7–8. Outbound motor vehicle shipments of explosives

a. All motor vehicles which will be carrying explosives require an inspection to be performed using a DD Form 626. Deficient equipment will not be used.

b. When a commercial vehicle fails an inspection using a DD Form 626, a copy of the inspection will be provided to the TO and the procedures in AR 55–355 will be followed.

c. Loading methods prescribed by Army Materiel Command (AMC) drawings will be followed for the loading and bracing of motor vehicle shipments of military explosives and ammunition. The packages will be placed in position without excessive or violent force.

d. All Government trucks transporting any DOT class of explosives (both on-post and off-post) will be equipped with two portable fire extinguishers rated class 10BC or greater. It is recommended that these two fire extinguishers be rated 2A:10B:C to enable users to fight a class “A” fire. One must be CO2 or dry chemical, if chemical munitions are being transported. Commercial trucks transporting explosives for the Army are required to have only one 10BC or greater rated fire extinguisher. Crews loading and unloading vehicles carrying or about to carry ammunition or

explosives must have two 10BC or greater fire extinguishers available as required by paragraph 3–7j(4) of this pamphlet.

e. Before motor vehicles loaded with ammunition and/or explosives leave an installation, drivers will be given hazardous materials response information. Commercial drivers will have the bills of lading annotated with the appropriate guide number from DOT Emergency Response Guidebook (ERG). Military drivers will use the DD Form 836 for hazardous materials information dissemination.

f. See AR 190–11 for instructions on security of vehicles carrying ammunition and/or explosives.

g. A copy of the complete site plan and the final safety submission, together with DDESB letter(s) of approval must be retained as a permanent record at the installation of origin. This information may be subject to review during future DDESB surveys.

7–9. Safe haven for explosive shipments

Installations with a safe haven capability as identified in AR 55–355, Volume 2, may grant safe haven to explosive shipments when requested by Military Traffic Management Command (MTMC) through the installation commander. Drivers who request safe haven from the guard at the installation gate will be advised to contact their company and have the company request safe haven through MTMC. If safe haven is granted, the driver is still accountable for the security of the load. Installations may grant safe haven in other situations at the discretion of the installation commander. If safe haven is not granted, installations will consider allowing an explosives-laden truck to rest at a secure area that meets Q-D criteria, but installations will not assume security responsibility for the shipment unless directed to do so by the installation commander.

7–10. On-post explosive movements

a. Cargo-type trucks and truck-tractor drawn semitrailer vans are best for transporting ammunition or explosives.

b. Equipment used for transporting ammunition or explosives must meet the following minimum requirements:

(1) Special precautions must be taken to avoid automotive exhausts igniting material.

(2) The lighting system must be in good working condition. Batteries and wiring will be located so that they will not come into contact with containers of explosives, ammunition, or other hazardous material. If exposed explosives or flammable vapors are encountered in a vehicle, only approved portable lights are permitted (listed by a nationally recognized organization for the specific hazardous locations defined by NFPA 500).

(3) The interior of the cargo body will have all exposed ferrous metal covered with nonsparking material when transporting ammunition or explosives not packaged for shipment in accordance with DOT specifications.

(4) Open-body vehicles, other than flatbed trailer-types used to transport large items such as rockets or missiles must have sides that are strongly constructed and securely fastened so that the items are safely retained.

(5) When a top is required, it will be of a noncombustible or flame-proof material. Tarpaulins used for covering explosives will be secured by rope or tiedowns. Nails will not be used to fasten protective tarpaulins.

c. Ammunition will be blocked and braced or secured with suitable tie-down straps to prevent movement.

7–11. Passengers in or on Government vehicles transporting explosives

a. Except as noted below, passengers may not ride in a vehicle transporting ammunition or explosives.

b. Under certain conditions, as approved in a standard operating procedure, the minimum essential personnel and limited quantities of HDs (04)1.2, 1.3 and 1.4 ammunition and/or explosives may be transported together in the cargo portion of vehicles. Examples are vehicles used by the military police (MP) in providing security or by EOD personnel performing their mission. These conditions are as follows:

(1) Explosives are packed separately from other items and packed in closed, clearly identified metal or wooden containers properly secured or sandbagged in the vehicle body to prevent movement.

(2) Seats are provided for all passengers.

(3) Smoking is not allowed in the vehicle.

(4) The vehicle cannot be left unattended.

c. Troops and ammunition may be transported in the same vehicle during training exercises when the vehicle is the prime mover for a weapon system engaged in the tactical portion of the exercise, troops being transported are assigned to the weapon system being moved, and the vehicle is organic to the unit.

d. Mission essential passengers may ride in the passenger compartments of vehicles transporting explosives if they can be safely seated.

e. Explosives will not be transported in a passenger compartment of a vehicle except in cases involving limited quantities (no more than two full outerpacks of small arms ammunition with nonexplosive bullets). The small arms ammunition must be in closed containers which are properly secured in the vehicle, and seats must be available for all personnel. Using privately owned vehicles for such purposes is prohibited, except for the Reserve Officer Training Corps (ROTC) and Marksmanship Programs when a Government-owned vehicle is not available. It is permissible to

transport limited quantities of HD 1.4 small arms ammunition in the trunk of sedan-type Government-owned vehicles or in cargo compartments of Government-owned van-type vehicles.

Section III
Rail, Air, and Water Transport

7–12. Railroad transportation

a. Railcar inspection

(1) A car must not be loaded with any DOT Class 1.1 or 1.2 explosives unless it has been thoroughly inspected by a qualified individual, employed by the railroad. This individual must certify that the railcar conforms to the requirements established in AR 55–355.

(2) Shipments of DOT Class 1.3 explosives may be loaded in a closed car or container car which is in good condition and which sparks cannot enter.

(3) Selections of cars for shipment of DOT classes 1.4, 1.5, or 1.6 will be done in accordance with 49 CFR selection criteria for 1.4 (Sec 174.115).

b. Transportation of hazardous materials. In addition to the requirements of other parts of this section, the following rules will be followed:

(1) When cars containing explosives or other hazardous materials are received at the installation or held in yards, precautions must be taken to prevent accidents, particularly at night. These precautions must include provisions for quickly removing and isolating the cars in case of fire.

(2) Cars loaded with hazardous materials must be properly loaded and placarded before being offered for transportion. The carrying of hazardous materials on locomotives or other self-propelled rail vehicles is prohibited.

(3) Before cars are moved by a locomotive, the air brake hose must be coupled and tested to assure that the air brakes are in proper working condition and the car doors will be closed.

(4) Empty cars will not be removed from warehouses, magazines, building, or loading docks until all warning placards have been removed.

(5) Special care must be taken to avoid rough handling of cars. Cars must not be cut off while in motion and must be coupled carefully to avoid unnecessary shocks. Other cars must not be cut off and allowed to strike a car containing explosives. Cars must be so placed in yards or on sidings that they will be subject to a minimum of handling and can be readily removed from danger of fire. Such cars must not be placed under bridges; in or alongside passenger sheds of a station; and, where avoidable, engines on parallel tracks will not be allowed to stand opposite or near them.

(6) "Dropping,""humping," "kicking," or the use of the flying switch is prohibited.

(7) Adequate measures such as guarding, patrolling, and safety inspecting must be provided at all times. All such activities will be under positive administrative controls.

(8) Fire symbols or DOT placards will be placed on each railroad car while transporting explosives or ammunition within an installation to provide quick identification of the potential hazard if fire breaks out.

c. Car inspection. Car inspections will be conducted in accordance with AR 55–355.

d. Car certificates. Car certificates will be used in accordance with AR 55–355.

e. Leaking packages. Constant alertness must be maintained to detect hazardous materials leaking from faulty packages either by sight or through characteristic odors. Leaking packages will be removed from cases and repaired. If artificial light is necessary, only electric lights approved for the hazard involved will be used. All unnecessary movement of a leaking package discovered in transit must cease until the unsafe condition is remedied.

f. Car loading of items containing ammunition and explosives. Loading methods prescribed by AMC drawings (DA Pam 75–5 contains a list of AMC drawings and ordering instructions.) will be followed for the loading and bracing of railway car shipments of military explosives and ammunition. If no drawing is available or yet developed, Bureau of Explosives (BOE) Pamphlets 6 and 6C will be used. The packages will be placed in position without excessive or violent force.

g. Tools for loading and unloading railcars. With reasonable care, steel tools may be used inside cars if explosives likely to ignite are not exposed. When explosives subject to initiation are exposed, sparkproof-tools will be used.

h. Sealing cars containing explosives and ammunition. In addition to any other seals which may be used, cars containing explosives or ammunition will be secured. A cable seal lock plus an upper rail lock will be used to secure car doors. Serial numbers of seals will be placed on the Government bill of lading (GBL).

i. Inspection of cars before unloading.

(1) A qualified person must inspect railcars containing explosives and ammunition entering an installation. This inspection includes examining the outside and underside of each car for damage, to detect unauthorized and suspicious items, and to check the correctness of individual car numbers and seal numbers against bills of lading. When the probability of sabotage is remote, such inspections may be accomplished from ground level without using an inspection

pit to discover unsafe structural mechanical deficiencies of the car. During periods of emergency when sabotage may be attempted, and also to aid in the rapid inspection and movement of cars, an inspection pit will be provided.

(2) Cars of ammunition or explosives on which foreign and suspicious articles have been secreted or attached outside or underneath the car, or cars which show a defect that might affect the installation or contents of the car, will be removed to the suspect siding for additional inspection.

(3) Cars which satisfactorily pass the inspection outlined above may be considered reasonably safe, but care must be exercised in breaking car seals and opening car doors because of possible damage or shifting lading, leaking containers, and so forth. When the Q-D standards for classification yards are met, cars may be opened for inspection in the classification yard. Otherwise, interior inspection will be accomplished after the cars have been spotted at the unloading point.

j. Inspection of cars after unloading. Cars in which explosives or ammunition are received will be inspected after unloading to see that they are clean and free from loose explosives or other flammable materials and that the placards and car certificates are removed. Explosives sweepings must be destroyed.

k. Damaged shipment. Any shipment received in a damaged condition because of inadequate or improper blocking and bracing or failure to load in accordance with appropriate AMC drawings will be reported on SF 361 in accordance with AR 55–38. If the damage was due to improper preservation, packaging, or packing, SF 364 will be prepared in accordance with AR 735–11–2.

l. Marking railcars with blue flags or signals. Blue flags or signals will be placed at both ends of a car or group of cars when personnel are working in, on, or under the cars. Cars marked in this manner will not be coupled to or moved. The supervisor or foreman in charge of the personnel loading or unloading the cars will place and remove the blue flag or signal. Train crews will be informed of the use of blue flags or signals. Exceptions are as follows:

(1) Flags are not required when flat cars are involved and the presence of a working party is clearly evident.

(2) Flags or signals may be omitted from the end of a car located against or toward a dead end spur. This also applies to a loading ramp where no other railcars can approach from that direction.

m. Looping railroad lines. Railroads lines serving explosives areas will be looped to give at least two ways to exit. Looping of railroad lines may not be required if a local hazard analysis indicates operations can be conducted safely.

n. Right-of-way fire hazard. Grass and brush along railroad right-of-way which present a fire hazard will be controlled.

7–13. Air transportation

Carrying ammunition, explosives, and other hazardous materials on civil aircraft is regulated by the DOT. Criteria for preparing and carrying hazardous materials on military aircraft is contained in TM 38–250, DOT regulations, and AR 95–27.

a. Military aircraft operating regulations.

(1) If an aircraft carrying hazardous materials makes a landing, forced or otherwise, and only minor repairs or refueling are necessary, the cargo need not be unloaded. Repairs or refueling will be accomplished at a location separated from dissimilar exposives and other aircraft by the appropriate IBD for the cargo aboard. For major repairs, the plane will be unloaded and the cargo stored in accordance with Q-D requirements. Appropriate protection will be afforded the cargo during inclement weather.

(2) When an explosive laden aircraft is parked in a designated, restricted, and posted explosives parking or loading and unloading area, fire symbols will be posted at all normal approaches to the designated area. Otherwise, fire symbols will be placed at the nose, tail, and each side of the aircraft. Where the height of the aircraft does not readily permit attaching the fire symbols to the aircraft, the fire symbols may be mounted on stands approximately 1.5 meters (5 feet) in height, positioned adjacent to the aircraft where they are visible at long range. At other DOD installations and at non-DOD installations, placarding will be in accordance with the requirements of TM 38–250 and the requirements of the host installation.

b. Permissible air shipments. Ammunition and/or explosives that may be shipped by civil air are identified in 49 CFR. Ammunition and/or explosives that may be shipped by military aircraft are identified in TM 38–250.

c. Loading and unloading aircraft.

(1) Before an aircraft can be loaded or unloaded with ammunition and/or explosives, it must be electrically grounded so that the resistance to ground does not exceed 10,000 ohms.

(2) When loading or unloading aircraft containing ammunition or explosives, work crews will display placards and fire symbols.

(3) Loading and unloading will be done in accordance with the Q-D requirements of chapter 5.

(4) All ignition switches must be in the OFF position.

(5) Front and rear wheel will be chocked.

(6) The loadmaster will direct the loading of military aircraft. Nonmilitary aircraft will be loaded to comply with civil air regulations.

(7) At nonmilitary airfields used by U.S. Army flight activities, the host normally provides aircraft rescue and fire

protection. If this protection does not meet the standards established in AR 420–90, Army fire department personnel and/or auxiliary firefighters will be used during Army flight activities, including loading and unloading of explosives.

(8) As a minimum, four portable fire extinguishers will be available for firefighting during all loading and unloading of explosives. Recommended extinguishers are as follows:

(a) Two each pressurized water-type extinguishers using Aqueous Film-Forming Foam (AFFF) liquid concentrate, 6 percent (MIL-F–24385); and,

(b) Two each Potassium Bicarbonate Base Dry chemical extinguishers, 13.6 kilograms (30 pounds) capacity.

d. Damaged shipments. Air shipments of explosives or ammunition received in a damaged condition or not loaded in accordance with applicable requirements will be reported on SF 361 in accordance with AR 55–38.

e. Containers. Containers of explosives in aircraft will not be opened or repaired.

7–14. Water transportation

a. Transporting explosives and/or ammunition on waters under U.S. jurisdiction and in vessels engaged in commercial service is regulated by the U.S. Coast Guard (USCG). Shipments overseas will be made in accordance with the regulations of the carrier, the USCG, International Maritime Dangerous Goods Code, or the Department of the Army (See TM 55–607.). If the travel route requires passing under any bridges, obtain prior authorization from the responsible agency.

b. Damaged shipments or shipments not stowed in accordance with regulations when received will be reported on SF 361 in accordance with AR 55–38. If damage was due to improper preservation, packaging, or packing, SF 364 will be prepared in accordance with AR 735–11–2.

c. Containers of explosives and ammunition will not be opened or repaired on board a vessel.

d. Vessels in which explosives or ammunition are received will be inspected after unloading to see that they are clean and free from loose explosives or other flammable materials and that warning placards, and so forth are removed. Explosives sweepings will be destroyed.

Chapter 8
Safety Site Planning, Construction, and Utilities

Section I
Explosives/Toxic Chemical Safety Site Plans

8–1. Explosives/Toxic Chemical Safety Site Plan Submittals

An explosives/toxic chemical safety site plan describes in text and graphics the relationship among proposed PES/toxic chemical sites, related facilities, and unrelated personnel and facilities. It also contains a description of the construction specifications for the facilities and the specifications and placement of required auxiliary equipment such as dividing walls, lightning protection systems, or utility service lines or conduits. It is submitted for DDESB approval of the particulars of the plan from an explosives safety perspective as required in DOD regulations.

a. DDESB approval of these safety site plans is required whenever an Army element:

(1) Establishes a new potential explosives or toxic chemical agent site which does or does not require construction. Examples of facilities which require submittals are those locations where ammunition, explosives, or toxic chemicals are developed, manufactured, tested, stored, repaired, modified, or destroyed.

(2) Modifies an existing sited facility by either increasing the hazard present or changing the facility's use to effect adversely its quantity distance or chemical interrelationships. Examples of this criteria are changes to the hazard

classification of items present, initiation of dissimilar activities, increased net explosives weight, increased toxic chemical agent hazard, or introduction of explosives into a previously exclusively toxic chemical site.

(3) Plans major modification of the construction features of an existing PES.

(4) Establishes a nonammunition ES in the vicinity of a PES which requires a specified separation from the existing or planned PES.

(5) Determines that no DDESB approved explosives safety site plan exists for an existing ammunition, explosives, or toxic chemical site.

(6) Redesignates a formerly temporary site as a permanent ammunition or toxic chemical site.

(7) Establishes a site which will be used repeatedly, although not continuously as an ammunition or toxic chemical site (other than as designated in b(1) below on training ranges).

(8) Removes restrictions on ammunition or toxic chemical operations which cause new exposure of previously unexposed sites to blast, fire, fragment, or toxic hazards.

b. An explosives safety site plan is not required for facilities or unimproved locations as follows:

(1) On training ranges where ammunition is present only for distribution to soldiers, crews, or vehicles in training. Storing ammunition or explosives on the range requires an explosives safety site plan submittal.

(2) Where ammunition or explosives will not be present and the location is beyond the inhabited building distance of existing or planned PESs.

(3) Where the proposed location is beyond the 1 percent lethality distance of a toxic chemical site. See DA PAM 385–61.

(4) Where the proposed site is beyond the greater of the explosive and the toxic chemical criteria above if both explosives and toxic chemicals are present.

(5) Where this pamphlet states that the proposed facility may be located without regard to quantity distance considerations.

(6) Where the proposed siting does not comply with all Army/DOD siting criteria. See AR 385–64, Chapter 7, for criteria for obtaining a Certificate of Compelling Reasons in this situation.

c. These provisions for submitting plans and specifications do not apply to the following:

(1) Temporary and emergency facilities to be located in areas in which the U.S. Army is engaged in:

(a) Combat operations.

(b) Contingency operations (hostilities may be imminent).

(c) Temporary (not to exceed 6 months) support of a foreign government; for example, Joint Chiefs of Staff exercise or DA exercise.

(2) Minor modifications to or rehabilitation of existing facilities necessary to:

(a) Support an emergency requirement for a limited time, not to exceed 30 days.

(b) Provide operating or maintenance line modifications due to manufacturing process changes or adapting a line to other end items where modifications do not introduce additional hazards or increase the net explosives capacity or chemical agent hazard for which the facility was designed or sited.

d. When the Army element is uncertain if an explosives or toxic chemical safety site plan is required, the MACOM of the host installation will make the determination.

e. Net explosives weight limits listed in explosives safety site plans will be determined based on the activity to take place at the site and the separation distances available.

(1) Normally locate storage PESs to achieve the maximum net explosives weight of each hazard class/division (1.1, 1.2, 1.3,1.4, and so forth), material which may be present at the proposed site, based on the separations available.

(2) NEW limitations at operating sites should consider the quantities and types of ammunition or explosives required to conduct the intended operations and the separations available.

(3) Locations reserved for future sites should be considered when determining or reviewing proposed site locations.

(4) MACOM approval authorities may provide further limitations through correspondence conveying DDESB approvals to the submitter or through the licensing process.

f. A copy of the complete site plan and the final safety submission, together with DDESB letter(s) of approval must be retained as a permanent record at the installation of origin. This information may be subject to review during future DDESB surveys.

8–2. Explosives safety site plan contents

a. Explosives safety site plans normally consist of two time- phased submissions.

(1) The intended user organization submits a preliminary site plan package before funds are committed to the project. It provides intended uses of the facility, its location, and the spatial relationship of PESs and ESs and as many other details as are known about the siting. It approves the physical location of the projected facility with respect to quantity distance criteria. Furnish a statement that the proposed siting has been reconciled with installation master plans

by the facility engineering activity and the Installation Planning Board as required by AR 210–20, AR 415–20, and AR 415–15. This provision does not preclude contracting-out the preparation of the preliminary site plan package.

(2) A request for final safety approval is also submitted by the intended user organization. It gains approval of the construction techniques and the specifications of installed and auxiliary equipment and verifies that the location has not been changed. It should be submitted for DDESB approval when the design phase of the project is approximately 60 percent complete. Actual construction of a new facility, modification of an existing facility, or use of an unimproved site cannot occur until DDESB final safety approval is received at the installation.

(3) Explosives safety site plans for simple situations and for pre-existing sites which do not appear to have an explosives safety site plan approval may be accomplished in only one submission so long as all information requirements for a final safety submission are met. Submission time frames of (2) above still apply to simple submissions.

b. Each submission consists of two parts.

(1) A cover memorandum describing the projected activities and associated material most easily covered by text.

(2) A series of enclosures providing the spatial layout of the project and other site planning requirements more easily stated in drawings, maps, or tables.

8–3. Review and approval of explosives safety site plans

a. Explosives safety site plan submissions (both preliminary and final safety submissions) for DDESB review and approval will be submitted through command safety channels of the host MACOM approval authority to the Director, U.S. Army Technical Center for Explosives Safety. USATCES will perform Army level review and approval functions. MACOMS will formally designate the internal review headquarters/agencies within their commands. Two copies of the entire submission must be provided to USATCES.

(1) When a tenant organization is proposing action which requires explosives safety site plan review and approval, the tenant organization's review and approval chain, through MACOM approval level, will approve the explosives safety site plan before submitting the plan to the host installation's explosives safety site plan review and approval chain and subsequently to USATCES and DDESB. Alternate review paths, proposed, and concurred in by concerned MACOMs and approved by USATCES before implementation, may be used.

(2) When a proposed Army PES risks other-service equipment or the appropriate explosives safety arcs encumber other-service real estate, the effected service originator/reviewer level concurrence/nonconcurrence will be obtained and attached to the submission for review at the remaining Army review levels. MACOMS will establish procedures to obtain concurrences at each review level below the military service level. USATCES will accomplish final Army coordination with military service level safety offices of the other services.

b. Each level of review will review the submission with regard to the technical aspects of explosives safety requirements and provide, in the form of an endorsement of the submission, a command recommendation for approval at the next level of review. If the MACOM approval authority does not recommend approval, the submission should not be forwarded for Army approval. Any additional conditions or implementing restrictions attached during the review phase become part of the original submission.

c. Normally, DDESB makes its decision on properly prepared and submitted routine submissions within 90 days. MACOM approval authority must provide the following information when requesting expedited review or approval:

(1) Date reply is required.

(2) Proposed contract award date.

(3) Reason expedited review is required.

(4) Reasons for not forwarding the submission in time for routine processing.

d. DDESB approvals will be returned to originators through command channels. The addition of conditions or implementing restrictions at any level will be considered aditional conditions of approval. These may be more restrictive than the DDESB conditions of approval but may not relax them.

e. Copies of DDESB final decisions and the complete submittals on which they are based will be maintained at the USATCES and, in the case of approvals, also at the MACOM approval authority and the installation. These files will be retained permanently. Upon closure of installations, these files will be forwarded to the USATCES with an explanation of circumstances for historical records. The USATCES will maintain an inventory of Army active potential explosion sites and historical files of former Army potential explosion sites.

f. DDESB approval of the final safety submission is required before inclusion of the project in the proposed budget year authorization or before NATO or host nation approval. MACOMs will indicate in all DD Forms 1391 (FY, Military Construction Project DATA (LRS)) submitted to HQDA that either the project is not subject to these standards or complies with them and indicate the date and currency of the DDESB approval.

g. Each installation with any potential explosion sites will maintain a consolidated map or drawing of all DDESB approved explosives or toxic chemical sites indicating the real estate encumbered (within the generated inhabited building arcs) by the sitings as well as the controlling ammunition/explosive/toxic siting generating the encumbrance. Future uses of these encumbered areas for construction or personnel presence must conform to the exposures allowed by AR 385–64 and this pamphlet.

Section II
Construction Considerations

8–4. Construction considerations

The primary objective of this section is to ensure design procedures and construction techniques used in siting explosives facilities will provide the desired margin of protection for personnel and valuable material. The secondary objective is to ensure that explosives facilities and other related facilities are constructed in a way that will maximize cost-effectiveness in both planning and facility utilization.

a. Use TM 5–1300 in selecting and designing explosives facilities.

b. By using the standards and guidelines provided in the TM 5–1300, organizations can ensure that both of the above objectives are met. Managers must carefully evaluate their need for explosives facilities and ensure that construction techniques match mission requirements.

8–5. Buildings

a. Construction features and location are important safety considerations in planning facilities that are to be a PES or exposed to the damaging effects of potential explosions, that is an ES. The effects of potential explosions may be altered significantly by construction features that limit the amount of explosives involved, attenuate the resulting blast overpressure or thermal radiation, and reduce the quantity and range of hazardous fragments and debris. Proper location of ES s in relations to PESs ensures against unacceptable damage and injuries in the event of an incident.

b. The primary objective of an earth covered magazine is to provide protection for its assets. To qualify for the default intermagazine distances in Table 5–6, a magazine must no collapse when exposed to an accidental explosion and resulting overpressures. The magazine may flex, but these deformations should take place and be limited to the air gap around the ammunition and explosives in the magazine. The deformed magazine or its door should not strike the ammunition or explosives.

c. There are three types of earth covered magazines. Each type corresponds to certain construction criteria and has headwalls and doors designed to withstand certain overpressures. These types are:

(1) Magazines with headwall and blast door hardnesses of “7-Bar” are designed to withstand overpressures of 100 psi.

(2) Magazines with headwall and blast door hardnesses of “3-Bar” axe desgined to withstand overpressures of 45 psi.

(3) Undefined magazines are magazines without reinforced concrete headwalls and are expected to offer the least resistance to overpressure.

d. The arch of an arch shaped magazine needs to be designed to support conventional dead loads. The roof a flat roofed magazine must be designed for both dead loads and dynamic, blast induced loads. The rear wall of a magazine must be designed for both dead loads and dynamic, blast induced loads. The side and rear walls of earth-covered magazines need only be designed to support conventional loads.

e. Each magazine will be provided with appropriate means of air circulation or dehumidification.

f. Each magazine will be provided with appropriate means of lightning protection in accordance with chapter 12.

g. For buildings which will contain ammunition and explosives, the roofs and wall should be as light in weight, that is weak, as practical. This does not apply to buildings or rooms which are built for containment or protection. Most buildings should be constructed and supported to allow the venting of an internal explosion, with the minimum number of large fragments. Exceptions are made where design requirements such as the following must be met:

(1) Fire walls.

(2) Substantial dividing walls.

(3) Special roof loadings.

(4) External overpressure protection

(5) Specified manufacturing facilities.

h. A list of magazines currently approved for construction can be found in appendix G.

8–6. Interior finishes and floors

a. Noncombustible material will be used for interior surfaces of buildings.

(1) Where hazardous locations (para 6–2) exist, interior surfaces should also be smooth, free from cracks and crevices, and with joints taped or sealed.

(2) If painted, the surfaces should be covered with a hard gloss paint that is easily cleaned. Horizontal ledges which might hold dust will be avoided or beveled. Cove bases at the junction of the walls and floor are recommended.

(3) If combustion-supporting materials are necessary in the interior of an operating building, treat or cover all exposed surfaces with fire retardant material.

b. Conductive nonsparking floors are required where certain exposed explosives and materials, sensitive (easily detonated or ignited) to the uncontrolled discharge of static electricity, are present.

c. Where washing is required, floors must be able to withstand repeated applications of hot water or other compatible cleaners.

8–7. Firewalls

Firewalls are designed to limit the spread of fire. They should extend through the roof and walls of the buildings. If openings are required, they must be protected as described in the NFPA 80.

8–8. Substantial dividing walls

a. These walls are one way of separating explosives into smaller groups to minimize the results of an explosion and allow a reduction in Q-D separation. See Chapter 5 for criteria for the levels of protection offered by these walls based upon the quantity of explosives present and the design characteristics of the wall.

b. Blast doors which separate explosives working spaces or storage spaces in existing buildings will meet design-definitive drawing specifications. Such doors should be at least as strong as adjacent walls (see TM 5–1300 for design factors for new structures). These doors are not to be installed as a matter of convenience. Blast doors should be avoided when a continuous reinforced wall would not interfere unnecessarily with operations.

8–9. Building exits

Exits and doors will conform with Occupational Safety Health Administration (OSHA), NFPA 101 and NFPA 80, requirements.

8–10. Safety chutes

Safety chutes will be provided as exits from multistoried, hazardous locations where rapid egress is vital and not otherwise possible.

8–11. Emergency exits and fire escapes

Use the ANSI Safety Code A156.3, NFPA 101, and NFPA 80 as a guide in constructing emergency exits and fire escapes. All openings will be protected as required by NFPA 101.

8–12. Stairways

Stairways will conform with OSHA requirements. Open risers should be avoided.

8–13. Fixed ladders

Fixed ladders should conform to the ANSI Safety Code A14.3 and OSHA Std. 1910.27.

8–14. Platforms, runways, and railings

Platforms, runways, and railings will conform with OSHA and NFPA requirements.

8–15. Passageways

If weather-protected passageways (ramps) for communication between buildings or magazines are constructed, these passageways should be of noncombustible construction and should be provided with suitable fire doors to interrupt a fire in its progress through the passage; these provisions will be applied in new construction. To prevent funneling of explosion forces, weak sections, openings, and abrupt changes in direction should be incorporated in design and construction of passageways between explosives buildings.

8–16. Roads, walks, and gates

a. Good all-weather roads should be provided to and within the explosives areas.

b. There is no mandatory safety requirement for more than one gate in the fence around an explosives area. Planners determine how many gates are needed after considering all elements of the situation (physical security, operations, explosives safety, fire protection, and so forth). Consideration should be given to providing an alternate personnel gate for emergency evacuation.

c. Road systems serving groups of magazines or explosives buildings will be arranged without dead ends so that

motor vehicles carrying explosives cannot be isolated. To prevent dead ending, interconnecting roads for magazine service roads need only be passable trails adequate to accommodate the typical vehicles used at the installation.

d. Roads serving a single magazine or explosives processing building (including its service facilities) may dead end at the magazine or building. The road system should be designed to eliminate the need for passing through an intermediate explosives area in traveling from one area to another.

e. Walkways and roads at the entrances to or between adjacent operating buildings containing explosives will be hard surfaced or boardwalks. These walkways and roads should be kept free from foreign material. Foot brushes, door mats, or scrapers should be provided at the entrance of each building, except magazines. Special attention will be given to passageways, walkways, and stairs which have been subjected to the effects of inclement weather.

8–17. Windows and skylights

a. IBDs do not protect against the hazards of flying glass. Transparent, nonshatterable, slow-burning plastic which is practically smokeless may be used as glazing if an explosion could cause injury from falling or projected glass. For windows glazed with conventional glass, the hazard from falling and projected glass may be reduced by covering the inside with wire mesh screening.

b. Skylights will not be used in buildings where explosives or ammunition are processed and should not be used in any buildings in an explosives area.

8–18. Drains and sumps

When drain lines are used for fluids containing explosives waste, they must have sumps or basins so that the waste explosives can be removed.

8–19. Hardware

a. To reduce the risk of accidental ignition by spark, the operational conditions in any hazardous location must be considered in the choice and installation of hardware. Certain hazards may be great enough to warrant using materials that will reduce the possibility of sparking. Therefore, special precautions must be taken for hardware having metal components which is used around exposed explosives.

b. Hardware must be secured firmly in place with locking devices if it might become loose and enter into an explosives mix. This precaution is especially important in manufacturing and renovation operations.

c. Avoid installing hardware (including pipes and ducts) on light blowout-type walls and roofs. If it is necessary, select materials or items that will not yield heavy fragments in an explosion.

8–20. Tunnels

Tunnels must be drained, ventilated, well-lighted, and have at least two exits. Water and steam service lines in tunnels will be lagged with suitable insulation. Tunnels between buildings that contain explosives will be built to resist the shock wave and blast of an explosion. Only authorized personnel will enter the tunnels.

8–21. Powerhouse equipment

Powerhouse equipment, boilers, engines, and auxiliary equipment will be installed in compliance with the American Society of Mechanical Engineers (ASME), Boiler Code (includes Code for Unfired Pressure Vessels), the NEC, and other codes, regulations, or standards accepted as standard good practice.

8–22. Refrigeration

Refrigeration equipment (including air conditioning) must be installed as required by the ANSI Safety Code B9.1.

8–23. Laundries

Laundries should have facilities for washing and flameproofing uniforms if such clothing is used.

a. The facilities will include a safe place to store uniforms and rags that are contaminated with explosives before washing. Sumps will also be provided to remove explosives from waste water. There should be facilities available to test whether the contaminant (particularly any insoluble toxic substance) has been removed.

b. Commercial concerns laundering such articles will be informed of the nature of the explosives contamination and possible dangerous chemical reactions. These concerns should also have the facilities listed in a above.

8–24. Steam for processing and heating

Steam used to heat operating buildings that contain explosives must never be hotter than 228 degrees Fahrenheit (F) (108.9 degrees Celsius (C). Process steam may exceed this if necessary but will not exceed 249.5 degrees F (120.8 degrees C).

a. The exterior of steam or hot water pipes in contact with wood, paper, or other combustible materials must never

be hotter than 160 degrees F (71 degrees C). If the steam is hotter than this, the steam lines must be covered and painted with an impervious material or otherwise protected against contact with explosives.

b. Where electrical resistance to ground is high, steam or hot water lines should be grounded where they enter buildings. See chapter 6 for further guidance on bonding and grounding requirements.

8–25. Ventilation

Buildings where dust, fumes, or vapor are formed will be adequately ventilated, preferably at the source of the hazard. Air should not be recirculated through these ventilation systems.

a. Exhaust fans through which combustible dust or flammable vapor pass will be equipped with nonferrous blades (or casting lined with nonferrous material) and suitable motors. Exhaust systems will be cleaned thoroughly and serviced on a regular schedule. These actions will be noted in a log. The entire ventilating system will be bonded electrically and grounded properly. The NFPA Standard 91 may be used in the installation of such systems.

b. For buildings in which explosives dust is present, an air balance that gives a slight negative pressure within the building is required.

c. If using air-conditioning equipment, it should be installed as directed in the NFPA Standard 90A and Standard 90B.

8–26. Electrical equipment

The installation of electrical equipment within an explosives area (building, magazine, shelter, and so forth) will comply with the NFPA 70 as a minimum, unless specified otherwise (chap 6).

8–27. Collection of explosives dusts

The high explosives dusts, which may be removed by a vacuum system, are TNT, tetryl, Explosive D, Composition B, and pentolite.

a. A wet collector which moistens the dust close to the point of origin and keeps it wet until it is removed for disposal is preferred. Explosive D should be collected in a dry system. More sensitive explosives (such as black powder, lead azide, mercury fulminate, tracer, igniter, incendiary compositions, and pyrotechnic materials) may be kept wet, with a compatible wetting agent close to the point of intake.

(1) Vacuum (aspirator) systems must be arranged so that each type of explosive is collected separately or so dissimilar hazards (for example, black powder with lead azide) are not mixed. Gases that may form must be properly liberated.

(2) Vacuum systems used to collect these more sensitive materials should be used only for operations with fuzes, detonators, small arms ammunition, and black powder igniters.

b. Dry explosives dust collection chambers, except as specifically provided for portable units, should be located outside operating buildings, in the open, or in buildings exclusively for the purpose.

(1) There must be a protective barrier between the operating building and the outside location or separate building containing the collection chamber.

(a) If the chamber contains 25 pounds of explosives or less, this barrier may be a substantial dividing wall located at least 8 feet from the operating building.

(b) If the chamber contains more than 25 pounds of explosives and is separated from the operating building by a 12–inch reinforced concrete wall (RCW), the wall must be separated from the operating building by a minimum of intraline distance.

(c) If the barrier meets the requirements for operational shields or barricades (for the quantity of explosives in the collection chamber), it will be at a minimum of IL(B) distance from the operating building.

(2) When it is not practical to locate dry collection chambers outside the operating building, a separate room within the building may be set aside for the purpose. This room must not contain other operations and may never be used as a communicating corridor or passageway between other operating locations within the building when explosives are being collected. If more than one collection chamber is to be placed in the room, the room will be subdivided into cubicles. Not more than one collection chamber will be in a single cubicle.

(3) Dry portable vacuum collectors will not be placed in a bay or cubicle where explosives are present. If they do not contain more than 5 pounds of explosives, they may be placed outside the building or in a separate cubicle having substantial dividing walls. If they contain more than 5 pounds, the requirement for stationary collectors will be met.

c. If stationary and portable wet-type collectors do not contain more than 5 pounds of explosives, they may be placed in operating bays or cubicles. If placed in separate cubicles, the limits for each one may be 15 pounds. If they contain more than 15 pounds, the location requirements for dry collectors will apply.

d. Collection systems and chambers will be designed so that metal parts do not pinch explosives or explosive dusts. Pipes or tubes through which the dust travels should have flanged, welded, or rubber connections. Threaded connections are not allowed. The system will be designed to reduce accumulation of explosives dust in parts other than the collection chamber.

(1) Long-radius turns (centerline radius at least four times the diameter of the duct) will be used in the duct work.

Short-radius bends may be used in systems for propellant powder provided they are stainless steel with polished interiors. The number of points of application of vacuum should be kept to a minimum. Each room requiring vacuum collection should have a separate exhaust line to the primary collection chamber. Not more than two bays will be serviced by a common leader to the primary collection chamber. Wet primary collectors are preferred.

(2) The vacuum line should be as short as possible from points of application of vacuum to the wet collectors. The number of wet primary collectors serviced by a single secondary collector should be kept to a minimum. Not more than two dry primary collectors should be connected to a single secondary collector (wet- or dry-type). If an operation does not create an airborne concentration of dust, a manually operated suction hose to remove explosives dust is preferred. A permanent attachment increases the risk of propagation through the collection system should a detonation occur at the dust-producing machine.

(3) Manually operated hoses should not be connected to explosives dust-producing machines. In dry vacuum collection systems, two collection chambers should be installed in series ahead of the pump or exhauster. Wet collectors must provide immersion of explosives to break up air bubbles, release airborne particles, and remove airborne moisture before it leaves the collector. This will keep moistened particles of explosives from entering the small piping between the collector and the exhauster or pump.

(4) Explosives dust will be removed from the collection chamber at least once each shift to eliminate unnecessary and hazardous concentrations of explosives. The entire system should be cleaned weekly, dismantling the parts if necessary.

(5) The entire explosives dust collection system will be electrically grounded and the grounds tested semiannually.

(6) Wet collection systems subject to freezing may be protected with antifreeze provided the antifreeze formula has been certified as compatible chemically with the propellant or explosives dust in use.

8–28. Automatic sprinkler systems

Certain buildings in explosives manufacturing, surveillance, and inspection or ammunition workshop areas (for example, the receiving building in a load line) may require automatic sprinkler systems. The proper system should be determined by engineering studies of the hazards involved. Each system must be equipped with an audible warning device to alert personnel. Sprinkler systems in each building must be connected to the central alarm location. Sprinkler systems will be installed as prescribed in AR 420–90, NFPA 13, and NFPA 16.

Section III
Open Storage Modules, Barricades, and Protective Construction

8–29. Barricaded open storage modules

a. As depicted in Figure 8–1, a module is a barricaded area comprised of a series of connected cells with hard surface storage pads separated from each other by barricades. A light metal shed or other lightweight fire-retardant cover may be used to protect individual cells from weather. Heavy structures (reinforced concrete, dense masonry units) or flammable material will not be used.

b. Module storage (open storage) may be used as determined necessary by the Army. However, from the standpoint of explosives safety as well as reliability, covered storage (earth covered magazines) is preferred for items requiring protection from the elements. Module storage is considered a temporary expedient and may not be employed in place of standard methods for long-term storage.

c. The maximum NEW permitted to be stored within each cell is 250,000 pounds (113,636 kg) (total of the explosives fill of all HC/D 1.1 and/or 1.2 ammunition).

d. Authorized storage will be—

(1) Limited to HE bombs (fuzed or unfuzed, with or without fins), similarly cased HD 1.1 ammunition, and the following contained in nonflammable or metal shipping containers: 30mm and smaller ammunition, cluster bomb units, inert munitions components, and hazard division 1.4 munitions.

(2) Stocks in each module normally will be limited to one type of item in the standard shipping configuration unless the controlling authority permits mixed storage.

(3) Module storage of ammunition in flammable outer-pack configurations will be minimized. Combustible dunnage or other flammable materiel shall not be stored in or within 100 feet of modules.

(4) When fire retardant tarpaulins are used as a cover, there must be a minimum of 18 inches between the tarpaulins and the stored ammunition.

e. Barricade requirements are as follows:

(1) All barricades used in forming the module and its cells will meet the requirements specified in paragraph 8–30. Minimum required barricade height above the top of the stack is influenced by the width or length of the stack (storage pad size) and the distance between the stack and the top of the barricade. Heights in Table 8–1 represent the minimum requirements for barricade locations based upon storage pad sizes and separations shown. When feasible, barricade

heights will be increased by using a 5-degree angle above the horizontal instead of the 2-degree angle shown in Figure 8–2.

(2) The centerlines of barricades between cells of the module will be located at a point halfway between adjacent munitions storage pads. Back and end (outside) barricades will be located at the same distance from the pads as those between the cells.

(3) Maximum advantage will be taken of natural barriers existing in the topography in siting these modules. If natural barriers are substituted for a portion of the module barricades, the protection provided will be at least equivalent to that of the barricade.

f. Cell storage pad size may be as required to accommodate stocks. Table 8–1 gives minimum pad sizes necessary to handle most items in the explosives quantities given. Storage pads will be hard-surfaced, if possible, to lessen the effects of earth shock from an accidental explosion. No restrictions are imposed upon the arrangements of cells within a module or upon the arrangements of groups of modules, except that cell openings may not face toward each other unless they are barricaded or meet the standard Q-D criteria for unbarricaded aboveground magazines.

g. Siting criteria—

(1) Distance between the nearest edges of stacks of munitions in adjacent cells and modules will be as shown for appropriate explosives weights in Table 8–1. When cell explosives loadings are established for weights other than those shown, minimum distances between stacks will be determined by the formula $D = 1.1W^{1/3}$.

(2) The distance between a module and other magazines will be determined by applying the intermagazine distances specified in Tables 5–5 and 5–6. The distances between the explosives in the cells of a module, and all other targets will be determined between the nearest edge of the munitions stack in the controlling cell and the nearest point of the target concerned (chap 5).

8–30. Barricades and earth cover for magazines

a. Barricading. Properly constructed barricades or undisturbed natural earth are effective means for protecting ammunition or explosives, structures, or operations against high-velocity, low-angle fragments although the barricades may be destroyed in the process. Since such fragments move along ballistic trajectories rather than straight lines, reasonable margins in barricade height and length must be provided beyond the minimum dimensions that block lines of sight. Barricades also provide limited protection against blast in the immediate vicinity. They do not provide any protection against high angle fragments and are ineffective in reducing the blast pressure in the far field (IBD or PTR distance).

b. Barricade requirements. Underground storage facilities present special conditions that must be accounted for in portal barricade design. Specific criteria for location and construction of portal barricades are provided in paragraph 8–30 e, below. For other than underground facilities, protection is considered effective when barricades meet the following minimum requirements:

(1) The slope of a barricade may not be steeper than 1.5 horizontal to 1 vertical in order to meet explosives safety requirements. Facilities constructed in the future should have a slope of 2 horizontal to 1 vertical to reduce erosion and facilitate maintenance operations.

(2) Determine the height and length of barricades as follows:

(a) Height. Establish a reference point at the top of the far edge of one of the two stacks under consideration between which the barricade is to be constructed. This reference point, if the top of the stacks are not at the same elevation, will be on the stack whose top is at the lower elevation. Draw a line from the reference point to the highest point of the other stack. Draw a second line from the reference point forming an angle of 2 degrees above the line. To preclude building excessively high barricades, the barricade should be located as close as possible to the stack on which the reference point was established. When the stacks are of equal height, the reference point may be established on either stack. (See fig 8–4.)

(b) Length. The length of the barricade will be determined as shown in Figure 8–5.

(3) Earth barricades that meet the above requirements may be modified by substituting a retaining wall, preferably of concrete, for the slope on one side. The remaining side will be of such slope and thickness as necessary to ensure that the width of earth required for the top is held firmly in place.

(4) Other intervening barriers meeting the above requirements or proven effective by test also may be used; for example, earth-filled steel bin barricades for explosives-loaded aircraft.

c. Location of barricades.

(1) The distance between the foot of the barricade and the stack of ammunition or explosives or buildings containing explosives is necessarily a compromise. The smaller the distance, the less the height and length of the barricade required to secure proper geometry for intercepting projections. On the other hand, it may be essential to make the distance great enough to provide access for maintenance and vehicles.

(2) If it is impractical to locate the barricades as described in (1) above, they may be located adjacent to the facility to be protected. (See fig 8–6.)

d. Earth cover for magazines and barricades.

(1) Material for earth cover over magazines and for barricades will be reasonably cohesive (solid or wet clay or

similar types of soil may not be used as they are too cohesive), free from deleterious organic matter, trash, debris, and stones heavier than 10 pounds or larger than 6 inches in diameter. The larger stones will be limited to the lower center of fills and will not be used for earth cover over magazines. Compaction and surface preparation will be provided, as necessary, to maintain structural integrity and avoid erosion. When it is impossible to use a cohesive material, for example, in sandy soil, the barricade or the earth cover over magazines will be finished with a suitable material to ensure structural integrity.

(2) The earth fill or earth cover between earth covered magazines may be either solid or sloped to meet the requirements of other construction features. However, a minimum of 2 feet of earth must be maintained over the top of each magazine. See paragraph 5–8d(4) for Q-D requirements for magazines with less than 2 feet of earth cover. A minimum slope of 1.5 horizontal to 1 vertical starting directly above the spring line of each arch will be maintained to meet explosives safety requirements. Facilities constructed in the future will have a slope of 2 horizontal to 1 vertical to reduce erosion and ease maintenance operations.

e. Portal Barricades for Underground Magazines.

(1) Portal barricades for underground magazines are located immediately in front of an outside entrance or exit (i.e., the portal) to a tunnel leading to an explosives storage point. The portal barricade should be centered on the extended axis of the tunnel that passes through the portal. Specific design criteria for a portal barricade are given in the Corps of Engineers definitive drawing number DEF 421-80-04.

(2) Portal barricades for underground magazines [CCA] must be located a distance of not less than one and not more than three tunnel widths from the portal. The actual distance should be no greater than that required to allow passage of any vehicles or materials handling equipment that may need to enter the tunnel.

(3) To withstand the impact of debris ejected from the tunnel, the front face of the portal barricade (including wingwalls) must be constructed as a wall of reinforced concrete, with a minimum thickness equal to 10 percent of the barricade height, but in no case less than 12 inches. The concrete wall must have a spread footing of sufficient width to prevent significant settlement, and the central wall, wingwalls, and footing must be structurally tied together to provide stability. The backfill behind the concrete wall may be composed of any fill material, including rock rubble from the tunnel excavation, with a maximum particle size of six inches within the area extending out to three feet from the rear face of the wall.

f. Earth-filled, steel bin-type barricades (ARMCO revetments or equivalent) for outside storage.

(1) These barricades, also known as ARMCO revetments, are earth-filled steel bins used to separate munitions awaiting schedules processing, e.g. munitions on flight lines associated with aircraft parking/loading operations or the temporary positioning of munitions awaiting transfer to preferred long-term storage. The barricades are also used to separate uploaded aircraft. These barricades are normally used to form a series of cells. The barricades are designed to limit the MCE (for QD siting purposes) of the munitions stored in separate cells by preventing prompt detonation transfer to adjacent cells provided the munitions in each cell of the facility are properly positioned.

(2) It is important to recognize that ARMCO revetment cells have been evaluated for a limited number of munitions. The DDESB Secretariat will maintain and distribute a current list of all munitions qualified for storage in ARMCO revetment cells.

(3) ARMCO revetments as sited below should only be considered for preventing prompt detonation transfer, and that all munitions (and aircraft) in the series of cells are at risk of loss. In other words, although the revetments are effective in limiting the blast loading of unrelated Exposed Sites to that produced by the largest contents of a single cell, there is a significant probability that the contents of many cells will be damaged or destroyed by the initial and subsequent fire and explosion events. The extent of such losses increases with the amount of explosives present. Therefore, if valuable munitions and/or aircraft assets are to be preserved, then the quantities allowed in cells should be limited to satisfy valid essential operational requirements.

(4) There are two type of ARMCO revetments, Type A and Type B. Type A revetments must be a minimum of 7 feet thick. Type B revetments must be a minimum of 5.25 feet thick. Type A ARMCO revetments may be used to limit the MCE in a series of cells to the largest quantity in a cell if that quantity does not exceed 30,000 pounds NEW. Type B ARMCO revetments may be similarly used to limit the MCE provided no cell contains more than 5,000 pounds NEW. The following conditions must be met:

(a) In addition to satisfying the criteria illustrated in figures 8–4 and 8–5, munitions must be positioned no closer than ten feet from cell walls, no closer than three feet from the end of the wingwalls, and no higher than two feet below the top of cell walls.

(b) Munitions shall be positioned with the objective of distributing them over the available area within the cell, rather than concentrating them in a small area. The contents of a cell (stored in quantities near the maximum NEW limit) must not be configured into a single row of pallets, stacks or trailers.

(c) Storage of munitions in inflammable outer-pack configurations must be minimized.

8–31. Policy on protective construction

Advances in protective construction allow a calculated degree of protection explosion communication between adjacent bays or buildings. They also protect personnel in adjacent bays or buildings against death or serious injury from

incidents, and protect vital and expensive equipment installations. Therefore, the major objectives in facility planning will be as follows:

a. Protection against explosion propagation between adjacent bays or buildings and protection of personnel against death or serious injury from incidents in adjacent bays or buildings (chap 5).

b. If personnel and facilities would be better protected or costs reduced significantly by having separate buildings to limit explosion propagation rather than using protective construction and separation of explosive units within one building, planning will reflect this fact.

c. Protection for vital and expensive equipment if the additional cost is warranted.

8–32. Strengthening (hardening of buildings)

When sufficient protection can be provided either by hardening a target building or by constructing a source building to suppress explosion effects, these factors may be taken into account, and the distance required by the standard Q-D tables may be reduced. Site and general construction plans for ammunition and explosives facilities that propose reduced distances based upon protective construction will be accompanied by the rationale or test results. These must justify the reduction when they are submitted for DDESB approval.

Table 8–1
Intermagazine separation for barricaded storage modules for mass detonating explosives

NEW	Minimum explosives-to-explosives distance in feet (barricaded) between	Barricade height based upon storage pad size	
	Cells & Modules $D = 1.1W^{1/3}$	Cell storage pad size (width or depth) in feet	Minimum height of barricade above top of stack in feet
50,000	40	30	2
100,000	50	30	2
125,000	55	30	2
150,000	60	30	2
175,000	60	30	2
200,000	65	30	2
225,000	65	40	2.5
250,000	70	40	2.5
250,000	70	50	3

Note: The barricade height above the explosives stack will be increased 6 inches for each 10 feet increase in the width or depth of the pad size.

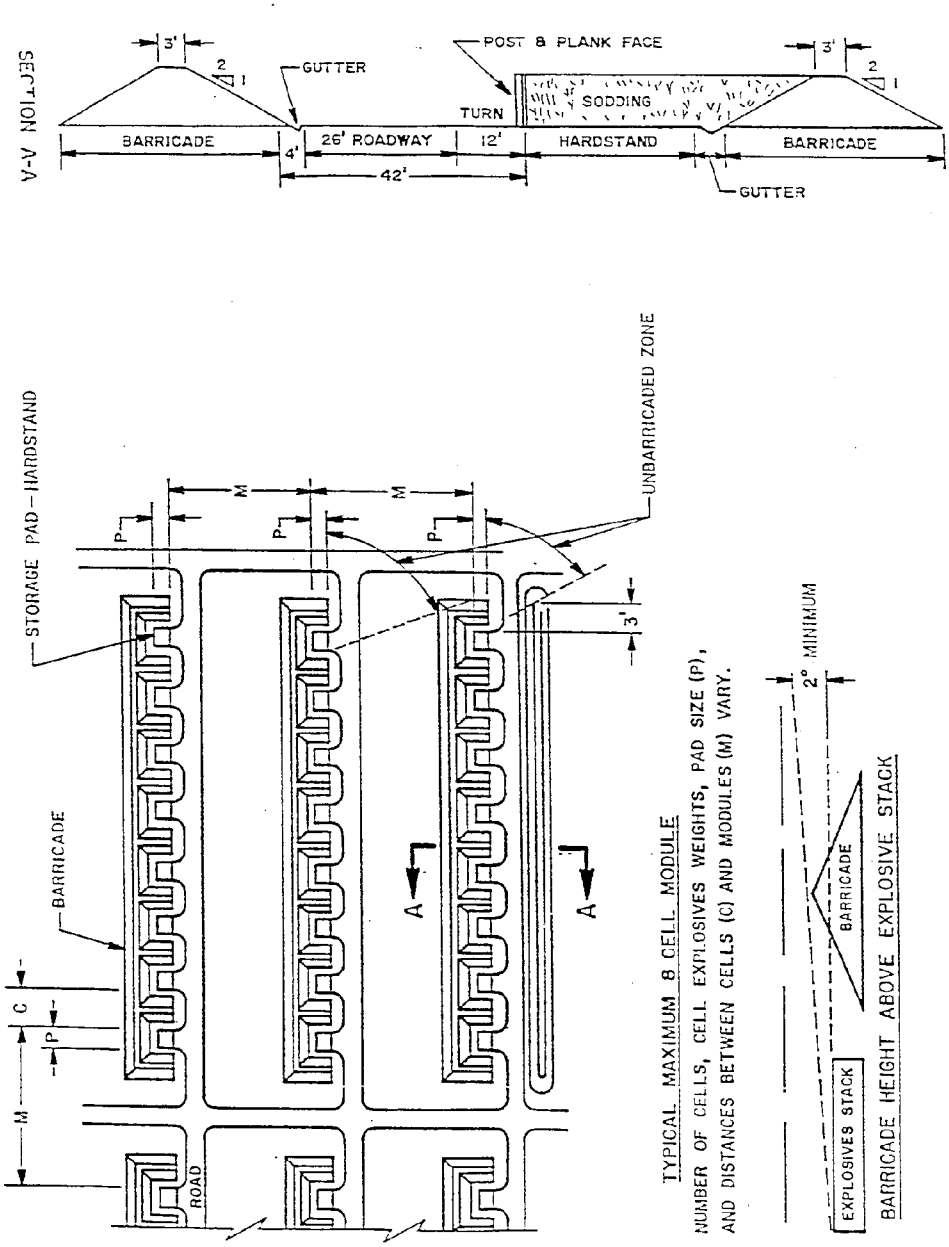

Figure 8-1. Typical 8–cell module

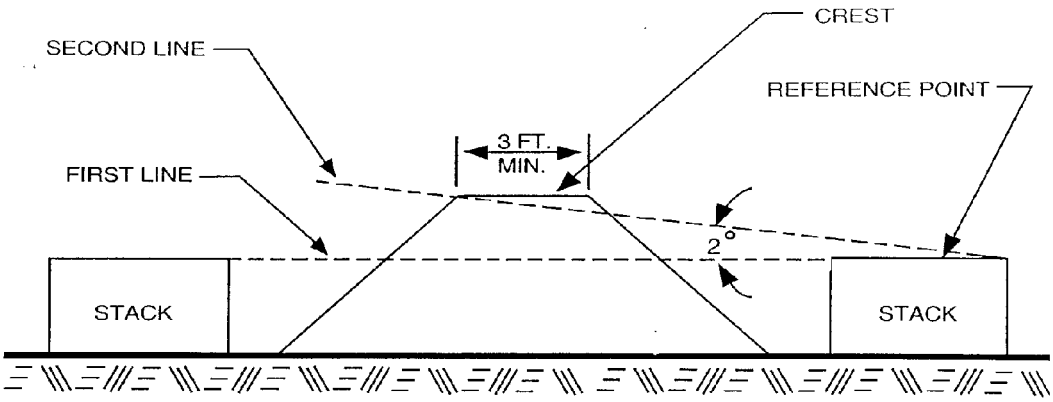

A. LEVEL TERRAIN

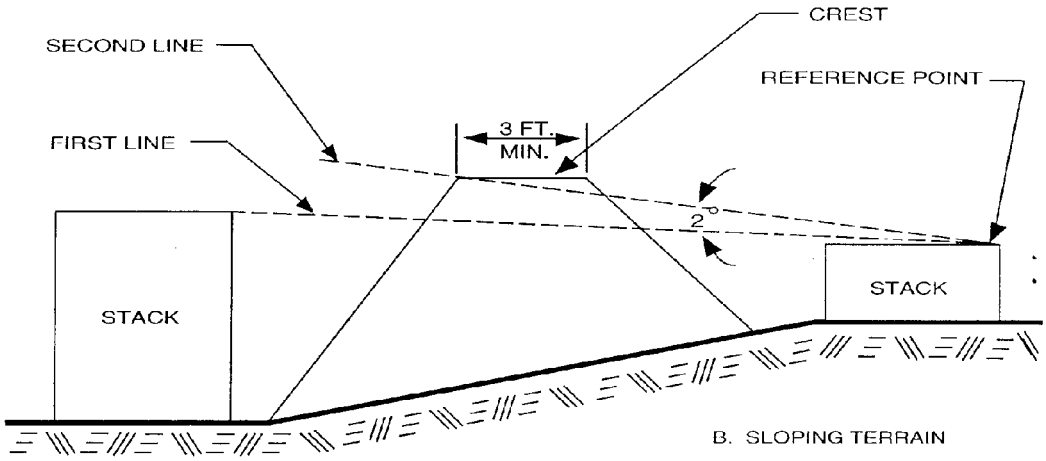

B. SLOPING TERRAIN

Figure 8-2. Determination of barricade height

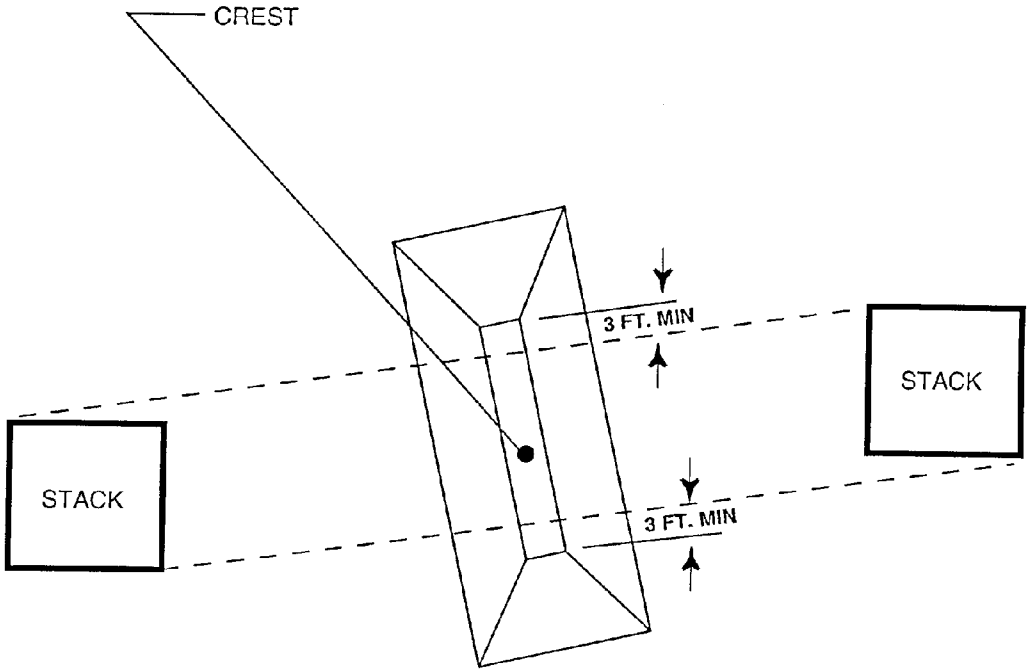

Figure 8-3. Determination of barrricade length

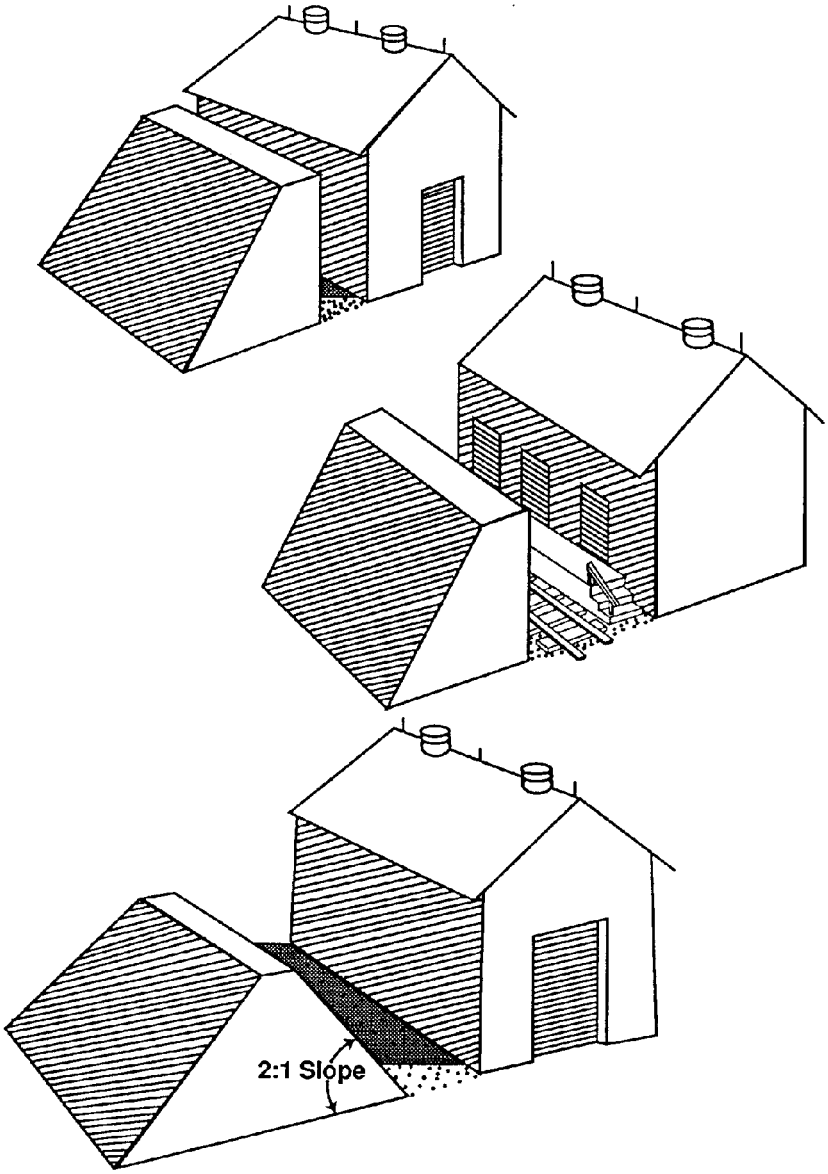

Figure 8-4. Barricade locations

Chapter 9
Explosives Licensing

9–1. Procedures

a. Explosives licenses are permanent documents with no expiration date. However, a new license will be issued, and the old license canceled, if encroachment changes the determining factor or changes in Q-D standards require license alterations.

b. The safety manager or director servicing the explosives location will certify and date the explosives license.

c. Explosives licenses will be reviewed annually by the responsible safety manager or director for compliance and encroachment. This review will include an on-site inspection of the area and a recomputation of the license.

d. The explosives license, together with maps of the explosives location and surrounding area, will be available at the servicing safety office. If the explosives location is not at the same installation as the servicing safety office, copies of the explosives license and maps will also be available at the explosives location. The maps will include structure numbers and accurate distances. A distance scale will be part of the map.

9–2. Required information

The explosives license form will, as a minimum, contain the following information:

a. Ammunition or explosives area location.

b. Ammunition or explosives facility location.

c. Type of facility.

d. The HD authorized.

e. Allowable limits of each HD (expressed in pounds (NEW) or kilograms (NEQ).

f. Determining factor or object which limits the amount of ammunition or explosives in e above.

g. Actual separation distance between the facility, cited in b above, and the determining factor, cited in f. above.

Chapter 10
Materials Handling Equipment (MHE)

10–1. General requirements

The materials handling equipment (MHE) (such as forklift trucks, tow motors, powered pallet jacks, electric hand trucks) will be used in a safe and efficient manner.

a. The operator will inspect MHE before use. Unsafe equipment will not be used until repairs are made. Safety devices; for example, dead-man switches, will not be defeated or circumvented.

b. All forklifts will have overhead guards meeting the requirements of applicable DOD and OSHA standards. The installation commander may grant exceptions to the overhead guard requirement only when the height of the overhead guard would keep the forklift out of work locations or the overhead guard would be lower than the top of the operator's head.

c. Operators will not use equipment to move loads that exceed the rated capacity of the MHE at the prescribed load-center.

d. The MHE will be used only for its intended purpose (for example, forklifts will not be used as towing tractors).

e. Containers or pallets will be lifted only in an authorized manner. Items will be lifted using forklift pockets, if present. Items will be slung from lifting lugs/eyebolts, if present. Deviations from standard lifting procedures must be approved in writing.

f. If multiple skids or pallets are to be lifted together, the items must be secured together to ensure the integrity of the lift.

10–2. Battery-powered materials handling equipment

a. Battery-powered equipment is the preferred MHE for handling ammunition and explosives inside a building or a poorly ventilated area.

b. Battery-powered equipment used within an explosives area will have all electrical cables mounted to prevent

catching on stationary objects or damage by cutting or abrasion. Cables will be protected to prevent short-circuiting in as far as is practical.

c. Batteries will be securely fastened. Battery boxes will provide ample ventilation, with ventilation openings that prevent access to the cell terminals from the outside.

d. Battery-powered equipment must be equipped with a dead-man switch and a main service switch which can be activated from the driving position.

e. Battery charging stations should be separated from explosives facilities by the applicable distance required in chapter 5.

f. The rated equipment defined in NFPA 505, types E, EE, ES, and EX, are satisfactory for handling all classes of ammunition and explosives packed in accordance with DOT regulations. Types EE and ES battery-powered equipment may be used for handling in-process ammunition (for example, sub-assemblies, explosives loaded components, and so forth) in corridors or ramps connecting hazardous operations. Types EE and ES equipment will not be used in areas containing explosive dusts or with explosives that, through handling, may produce explosive dusts.

g. Type EX equipment is the only equipment approved for use in areas with explosive dusts (NFPA 505). EX equipment does not carry a dual rating and can be used only in hazardous areas for which it is specifically designed.

10–3. Gasoline and diesel powered equipment

a. Gasoline and diesel powered equipment for handling inert materials will be equipped with backfire deflectors securely attached on the throat of the carburetor. These deflectors will be of the oil-bath or screen type. Certain types of air cleaners can serve as backfire deflectors. A tight fitting cap, properly vented, will be in place on the fuel fill pipe at all times except during refueling. A flame arrester will be installed in the fill pipe. If necessary, a deflector plate will be installed to prevent any overflow from the fuel tank from reaching the motor or the exhaust pipe. On gravity feed systems or on pump systems, where siphoning might occur, a shut-off valve will be installed at the fuel tank or in the feed line to permit shutting off the flow of fuel during an emergency or break in the fuel line or carburetor. Provisions will be made to protect against vibrational rupture of the fuel lines.

b. All MHE will be provided with a fire extinguisher having a minimum rating of 5BC.

c. Gasoline and diesel-powered equipment should be checked before being put into operation to ensure sufficient fuel is available to minimize refueling requirements. Fueling of MHE in the ammunition area will be done in accordance with paragraph 3–7g(6).

10–4. LP-gas-powered equipment

a. LP-gas-powered equipment for handling inert material will be type LPS. All fuel lines, fittings, and containers will be designed and installed in accordance with NFPA Standard 58 to provide maximum protection against damage to the system by vibration, shock, or objects striking against it and against failures from other causes.

b. All LP-gas-powered equipment will be provided with a fire extinguisher having a minimum rating of 5BC.

c. LP-gas-powered equipment should be checked before operation to ensure all fuel lines, fittings, and containers are secure and that sufficient gas is available to reduce refueling or replacement of fuel containers.

10–5. Gasoline, diesel-powered and LP-gas-powered equipment for handling explosives materials

a. Gasoline, diesel-powered and LP-gas-powered equipment with the precautionary measures and devices described in paragraphs 10–3 and 10–4 are appropriate for handling all classes of ammunition and bulk explosives packed in accordance with DOT regulations. Included are closed ammunition items containing explosives (for example, artillery projectiles or bombs), including fuzes if approved for shipment in this manner, and provided the material is not located in a hazardous location as defined by the NFPA. The exterior of the cartons, projectiles, bombs, boxes, and so forth, must not be visibly contaminated with explosives or have any explosives exposed.

b. Due to the inherent hazards of operation, gasoline-powered or LP-gas-powered MHE will not be used in Richmond or earth covered magazines.

c. Clean burning diesel equipment meeting the criteria of MIL-T–52932 and electric powered forklifts are permitted in Richmond and earth covered magazines provided—

(1) Material in a hazardous location as defined by the NFPA 70; for example, explosive dusts or vapors, must be handled by equipment which is rated according to the NFPA 505 for use in these areas.

(2) Concentrations of combustion products and noise emitted by the MHE must be monitored by the using installation to ensure compliance with OSHA and The Surgeon General's standards.

10–6. Storage

a. Battery, gasoline, or diesel-powered equipment may be stored in a magazine, storehouse, or other suitable location that contains only inert materials.

b. The equipment should be at least 10 feet from any combustible material.

c. Aisles will be kept clear at all times, and individual pieces of stored equipment should be spaced to minimize the spread of fire from one unit to another.

d. Equipment may be parked in fire-resistant buildings containing explosives, providing such equipment is essential for day-to-day operations. However, the following minimum requirements must be met:

(1) Equipment must be stored in an area that is suitably and completely separated (by firewalls and closed doors) from the bays, rooms, or cubicles that contain the explosives.

(2) Designed fire-resistant ratings for the enclosures containing explosives are not degraded.

e. When necessary for efficient operation, battery-powered MHE is permitted to be used in buildings or magazines containing explosives or other hazardous materials may be temporarily stored in magazines containing packaged ammunition and explosives and inert warehouses provided the following conditions (designed to prevent fires or other trouble from occurring during unattended periods) are met:

(1) Periods of idle storage shall not exceed 4 days.

(2) After each workday, MHE will be inspected for hot brakes, leaking oil, or fluid. If these are found, the MHE will be removed from the building.

(3) MHE will be made inoperative by removing ignition keys, activating shut-off switches, or seat control disconnects, and so forth. Battery cables will not be disconnected in explosives storage locations due to the possible arcing when terminals separate.

(4) MHE will be parked and secured at the maximum distance from the explosives or ammunition.

(5) MHE will not be stored in an operating building containing explosives because of the increased hazards of loose or exposed explosives.

Chapter 11
Port Operations

11–1. Background information

a. Successful port operations require preparation at the home station. This preparation includes the proper blocking and bracing of ammunition and explosives as well as planning the best movement routes and times. This chapter provides guidelines to best accomplish these operations.

b. This chapter applies to movement of units to ports in times of war or national emergency. It also applies to the operations at ports in times of peace, war, or national emergency.

11–2. Loading of vehicles

a. Before loading vehicles for movement, commanders will consider the conditions expected at the point of embarkation and disembarkation. Ammunition should be loaded only on or in vehicles with load restraint systems designed for ammunition. Additional quantities of ammunition should not be placed, for example into the cabs of vehicles or banded to the exteriors of mounted generators, communications shelters, and so forth.

b. Before loading ammunition and explosives (A&E), a suitable site must be selected for this operation. This site will be licensed and have an approved site plan in accordance with chapters 8 and 9. This site will be equipped with lightning protection in accordance with chapter 12. This site will not be in the ammunition supply point (ASP) because of the increased risk involved.

c. The loading operation will be conducted during daylight hours or under strong illumination at night. At no time will loading operations be conducted under conditions of darkness.

d. Vehicles will be loaded in accordance with vehicle load drawings. These drawings can be obtained from Director, DAC.

e. A person certified to release shipments will inspect and approve all vehicles containing shipments of hazardous materials. This inspection will be as close as possible to the inspection required for trucks carrying A&E. Vehicles which fail to pass the inspection will be repaired and required to pass the inspection before being loaded.

f. Vehicles which are waiting to be loaded will be kept at IBD from the loading site before the beginning of the loading operation. Once a vehicle is loaded and properly blocked and braced, it will be moved to the vehicle holding site.

g. The loading site will not have more vehicles in it at one time than it can safely handle.

11–3. Vehicle holding site

a. A vehicle holding site will be selected prior to movement. This site will have lightning protection, in accordance with chapter 12, and be approved by the DDESB.

b. Unless vehicles or groups of vehicles can be sited at magazine distance, the whole vehicle holding site will be counted as one site for QD purposes. Magazine distance will prevent immediate propagation from one vehicle or group of vehicles to another, but will not prevent delayed propagation caused by firebrands or prevent destruction of vehicles.

11–4. Railhead operations

a. Vehicles loaded with A&E will not be brought to the railhead until time for loading them on the railcars. A loadmaster with a written appointment will control the arrival of vehicles for loading.

b. As each car or cut of cars is loaded, it will be moved to a rail holding yard or sent to the port. Loaded cars will not be kept at the railhead longer than necessary.

c. Vehicles will be secured to the railcar to prevent movement before moving the car.

d. Railheads and rail holding yards will be properly sited and have lightning protection in accordance with chapter 12.

11–5. Road movement

a. Vehicles moving over the road to port will have as a minimum two 10BC fire extinguishers. Vehicle occupants will have ready access to the fire extinguishers. Fire extinguishers will not be locked up during movement.

b. Rest stops will be planned to allow parking vehicles with A&E as far away as possible from public gathering places, such as, rest rooms, picnic areas, and so forth.

(1) Vehicles will not be left unattended at rest stops.

(2) People unrelated to the movement will be kept as far away as possible from vehicles loaded with A&E.

(3) During prolonged rest stops (over 2 hours), fire extinguishers will be placed at 100 feet intervals between vehicles. These fire extinguishers will be at least 50BC in size and have at least a 5A rating.

c. Vehicle occupants will not smoke within 100 feet of loaded vehicles. During rest stops people who are smoking will be kept at least 100 feet from vehicles carrying A&E.

d. Vehicles which break down during movement will not be left unattended.

(1) If repairs cannot be made where the vehicle broke down, the A&E will be removed and placed on another vehicle before towing the broken down vehicle.

(2) Using flame producing devices on loaded vehicles is prohibited. If a flame producing device is needed to repair the vehicle, the A&E will be unloaded and moved at least 100 feet from the vehicle before beginning repairs. The A&E will not be left unattended while it is off the vehicle.

(3) Repairs which increase the risk of fire, for example, battery removal, removal of fuel, and so forth, require the removal of A&E as noted in (2).

e. If an accident happens, any fires which occur will be fought until they are in among the A&E.

(1) Injured personnel will not be moved unless their lives are threatened. Medical personnel will be called to treat and remove injured personnel as soon as possible.

(2) Immediate action will be taken to keep other vehicles and personnel at least 4,000 feet from the scene of the accident.

(3) If the damaged vehicle cannot be moved, the A&E will be loaded onto another vehicle for continued transportation. At least two 50BC fire extinguishers will be kept immediately ready for use during the transfer operation.

(4) If the damaged vehicle is not leaking fluids and can move on its own power, it can continue with its load. It will be checked for leaks at each stop. If it begins to leak, the A&E will be transferred to another vehicle.

f. Vehicles will be grounded before beginning refueling operations. Vehicles will be grounded together to equalize the potential between the fuel truck and the vehicle being fueled.

g. Vehicles will be staged so that A&E loaded vehicles do not accumulate at any one location in large numbers. This is especially important at the port. Normal QD requirements will be difficult, if not impossible, to observe at most contingency ports. The arrival of vehicles will be timed, if at all possible, to prevent the accumulation of vehicles on the docks at the port.

11–6. Port safety

a. General requirements. This section applies to piers and wharves and associated facilities at which ammunition and explosives may be handled or be present in ships' holds or service conveyances. These provisions apply to loading, offloading, stowing, and shifting of ammunition and explosives. Q-Ds herein are for HD 1.1. If only ammunition and explosives of other HDs are involved, the Q-Ds for such hazards will be applied as appropriate. Separation distances are listed in Table 11–2.

b. Determination of quantity of explosives in a ship.

(1) On board ship, the various types of ammunition and explosives are stored relatively close to each other in partial

confinement, and a detonation in the HE part of the cargo may receive considerable support from items that are normally considered to be only fragment or fire hazards; therefore, the total quantity of explosives on board a ship will be determined in accordance with Table 11–1.

(2) When ship units are separated by column 3 (K11) distances or greater, (Table 11–2), Q-D will be based individually on the quantity of each ship unit. Lesser separation distances require that the explosives in both ship units be totaled for Q-D purposes.

(3) Separation of a wharf yard from the pier which it serves by a distance clearly sufficient to prevent immediate propagation of an explosion (column 3) will be impractical in many cases. In such cases, the wharf yard will be considered as part of the ship or barge unit and added to it to compute the total amount of explosives for Q-D purposes. The outer limit of the wharf yard then will be considered as the ship unit boundary for computing applicable Q-D requirements.

c. Measurement of separation distance.

(1) *Ships at a pier.* Measurement of separation distances between ships will be from the nearest point of one unit to the nearest point of the other. Cars passing through the clear space are an operational risk. It will generally be impractical to separate berths at a single pier by enough distance to prevent mass-detonation of ships containing complete cargoes of HD 1.1 ammunition. To the extent operationally feasible, therefore, scheduling shall reduce the number of such exposures and total time that they are required.

(2) *Piers.* The separation distances between piers shall be measured from the nearest point of the ship unit at one pier to the nearest point of the ship unit under consideration at the other pier.

(3) *Anchorages and scuttling sites.* Measurements generally will be from the boundary of the area designated for the scuttling site or the explosives anchorage. In the case of the explosives anchorage, the separation distance to outside targets shall depend upon whether—

(a) The ship units that are loading or unloading within the explosives anchorage are separated properly, taking into consideration location and the amount of explosives in each ship unit. The ship unit equivalent for an explosives anchorage is a circle, the radius of which is the distance from the mooring buoy or the ship's anchor to the stern of the ship or of the ammunition lighters alongside when riding to the full length of the chain. To maintain proper separation distance between loading or unloading ship units in the explosives anchorage, the ships will moor or anchor so that at no time will they have a separation distance less than column 3 (K11) if quantities are not to be totaled.

(b) The ships being loaded or unloaded at one area are separated properly from the loaded ships in another area and whether the loaded ships within the loaded ship area are separated properly from each other. If the latter conditions do not apply, the quantity for entering on the table will be the total quantity rather than the unit quantity.

(4) *Dolphins or interrupted quays.* Measurement of separation distance between ships moored to dolphins or interrupted quays will be from the nearest point of one unit to the nearest point of the other.

(5) *Fixed targets.* The measurement of separation distance from moored ships to fixed targets on land will be from the nearest boundary of the ship or barge unit to the nearest fixed target.

d. Siting criteria and application of Q-D separation standards.

(1) *Scuttling site.*

(a) A properly located scuttling site will be provided, if practical, for positioning a ship for its flooding or sinking if the vessel catches fire and must be moved to avert damage to other ships or piers. It will have sufficient sea room and depth of water to permit the sinking of the largest vessel that may be handled at the installation so that the holds will be flooded completely at low water.

(b) Since an explosion may occur during movement, the scuttling site will provide the best available protection to other ships, piers, and shore installations.

(c) The location of the scuttling site will depend on the greatest net quantity of mass-detonating explosives that may be in a single ship at any one time. The Q-D tables to be used will depend on the particular types of targets.

(2) *Explosives anchorage.* An explosives anchorage will be separated from the main ship's channel or from normally traversed routes of ships entering or leaving the harbor by both column 2 (PTR), distances, and by turning circles and stopping distances of the ships. Assuming that the diameter of the turning circle of a ship is 3,000 feet, an explosives anchorage will be located so that a ship in the channel with a jammed rudder will clear an anchored explosives-laden ship. From the turning circle standpoint, the separation distance will be not less than 3,000 feet.

(a) When explosives anchorages are used for loading and unloading ships, as well as for fully loaded vessels anchored at their berths, ships that are being loaded or unloaded will be separated from fully loaded ships by column 5 (K40) distances.

(b) When the explosives anchorage is used only for loading and unloading ships, to prevent mass-detonation, ships

in the explosives anchorage will be separated by at least column 3 distances. Whenever possible, these separation distances will be increased to column 4 (K18) distances to reduce the loss potential of any incident.

(c) Loaded ships will be separated one from another by at least column 4 (K18) distances.

(d) Explosives anchorages will be separated from explosives piers by column 5 (K40) distances unless the anchorage is used only for the loading and unloading of vessels. In such cases, column 4 (K18) distances will be used.

(3) *Separation of piers.* Ammunition piers at a port facility will normally be separated by column 4 (K18) distances to prevent explosive propagation (Table 11–2).

(4) *Ships in tandem.* Separation distances of ship units in tandem at the same pier.

(a) When multiple ships must be handled at one pier, tandem berthing is recommended. A detonation of one ship would expose others to a heavy fragment density, possibly producing fires and delayed explosion propagation. A direct hit by a fragment on ammunition alongside the ship or in an open hold could cause a mass-detonation. Separation distances based on blast damage alone may not be enough to withstand such fragment hazards. Berthing of the two ships in tandem will help to decrease the fragment hazard to the explosives cargo of the second ship because of the additional protection afforded by the bow or stern.

(b) When two ships cannot be separated by column 3 (K11) distances and are being loaded through all hatches, the spotting of cars and the loading of hatches in both ships will be planned so as to put the greatest possible distance between open hatches of both ships, and between the trucks and freight cars serving the two ships. When possible, the loading of the ships will be staggered.

(5) *Separation of explosives ships from other ships.* Explosives ships being loaded or unloaded will be separated from nonexplosives-carrying ships and from loaded explosives ships that are not underway by column 5 (K40) distances. Column 2 (PTR) distances will be used to protect ships that are underway.

(6) *Occasional watercraft.* Occasional watercraft passing through the arcs while outside both the main ship channel and normally traversed routes of ships entering and leaving the harbor, are not subject to Q-D requirements.

(7) *Maritime Prepositioning Ships.*

(a) Reduced Q-D criteria may be applied to those Maritime Repositioning Ships (MPS) which contain up to 1,300,000 pounds of NEW of ammunition stored in standard ISO shipping containers.

(b) Inhabited building and public traffic route QD arcs for applicable MPS can be determined using K=40.85 with a 4,400-foot minimum fragment distance for IBD and K=24.01 for PTR for MPS loads where no more than 52 percent of the NEW is HC/D 1.1 materiel. Above 52 percent, the K factor increases as shown in table 11-3, columns 2 and 3. Table 5-1 applies where the HC/D 1.1 materiel increases above 65 percent of the NEW.

(c) The QC arc between applicable MPS piers/anchorages and non-explosive loading piers/anchorages can be determined using K=32 with a 3,500-foot minimum fragment distance for MPS loads where no more than 52 percent of the total NEW is HC/D 1.1 materiel. Above 52 percent, the K factor increases as shown in table 11-3, column 4. Table 11-2, column 5 applies when the HC/D 1.1 materiel increases above 65 percent of the NEW.

e. Quantity-distance tables.

(1) For Q-D between ammunition and explosives-laden ships or barges, use Table 11–1 together with Table 11–2.

(2) For Q-D between ammunition and explosives-laden ships or barges and other locations, the following applies:

(a) When considering the ship or barge as a PES, magazine distance applies to explosives storage locations. Use Table 5–6 and the columnar formulas given in Table 5–5. IBD applies to administrative and industrial areas, explosives operating facilities, and the terminal boundary. Use Table 11–2, column 6 (IBD). PTR applies to the main shipping channel and other PTRs; use Table 11–2, column 2 (PTR). Because Table 11–2's NEWs are listed in large increments, Table 5–1 may be used for NEWs between Table 11–2's listed values. For IBD, use column 5 (Table 5–1) or the formulas given in note 3. For PTR, use column 9 (Table 5–1) or the formulas given in note 7.

(b) When considering the ship or barge as an ES, IBD applies from on shore explosives storage locations and operating facilities to the ship or barge. Use the same distance sources for IBD as listed in (a) above.

f. Wartime or national emergency. During wartime or national emergencies when contingency ports are being used, the QD required above may be impossible to follow. When the QD above cannot be followed—

(1) Vehicles will be brought up to the dock as close to their loading time as possible. Vehicles will not be allowed to congregate at the dock.

(2) Firefighting equipment will be ready at the dock. Either a fire boat, fire engine, or 50BC fire extinguishers with at least a 5A capability will be stationed every 100 feet along the dock and in the holding area.

(3) RORO ships are not subject to the requirements of QD.

Table 11–1
Mixed class/division for QD computations

	1.1	1.2	1.3	1.4	1.6	1.1 & 1.2	1.1 & 1.3	1.2 & 1.3
1.1	–	A	B	G	C	A	B	D
1.2	A	–	E	G	C	A	D	E
1.3	B	E	–	G	F	D	B	E
1.6	C	C	F	F	–	A	B	D

A. (1) Treat the entire quantity of NEW/NEQ as 1.1 and figure the QD.
(2) Treat the entire quantity of NEW/NEQ as 1.2 and figure the QD.
(3) Use the greater distance.

B. (1) Treat the entire quantity of NEW/NEQ as 1.1 and figure the QD.
(2) Treat the entire quantity of NEW/NEQ as 1.3 and figure the QD.
(3) Use the greater distance.

C. Treat the entire quantity as 1.1.

D. (1) Treat the entire quantity of NEW/NEQ as 1.1 and figure the QD.
(2) Treat the entire quantity of NEW/NEQ as 1.2 and figure the QD.
(3) Treat the entire quantity of NEW/NEQ as 1.3 and figure the QD.
(4) Use the greater distance.

E. (1) Figure the QD for the 1.2 NEW/NEQ.
(2) Figure the QD for the 1.3 NEW/NEQ.
(3) Use the greater distance.

F. Treat the entire NEW/NEQ as 1.3.

G. Disregard the 1.4 NEW/NEQ.

Table 11–2 (PAGE 1)
Quantity-distance separations for pier and wharf facilities

NEW (MILLION POUNDS)	DISTANCE (FEET)				
Col 1	PTR Col 2	$11W^{1/3}$ Col 3	$18W^{1/3}$ Col 4	$40W^{1/3}$ Col 5	IBD Col 6
.001	750	110	180	400	1,250
.01	750	235	390	860	1,250
.10	1,115	510	835	1,855	1,855
.25	1,890	690	1,135	2,520	3,150
.50	2,380	875	1,430	3,175	3,970
.60	2,530	930	1,520	3,375	4,215
.70	2,665	975	1,600	3,550	4,440
.80	2,785	1,020	1,670	3,715	4,640
.90	2,895	1,065	1,740	3,860	4,825
1.00	3,000	1,100	1,800	4,000	5,000
1.25	3,230	1,185	1,940	4,310	5,385
1.50	3,435	1,260	2,060	4,580	5,725
1.75	3,615	1,325	2,170	4,820	6,025
2.00	3,780	1,385	2,270	5,040	6,300
2.25	3,930	1,440	2,360	5,240	6,550
2.50	4,070	1,495	2,445	5,430	6,785
2.75	4,205	1,540	2,520	5,605	7,005
3.00	4,325	1,585	2,595	5,770	7,210
3.25	4,445	1,630	2,665	5,925	7,405
3.50	4,555	1,670	2,735	6,075	7,590
3.75	4,660	1,705	2,795	6,215	7,770
4.00	4,760	1,750	2,855	6,350	7,935
4.25	4,860	1,780	2,915	6,480	8,100
4.50	4,955,	1,815	2,970	6,605	8,255
4.75	5,045	1,850	3,025	6,725	8,405
5.00	5,130	1,880	3,080	6,840	8,550
5.50	5,295	1,945	3,175	7,060	8,825
6.00	5,450	2,000	3,270	7,270	9,085

Table 11–2 (PAGE 2)
Quantity-distance separations for pier and wharf facilities--Continued

Col 1	PTR Col 2	$11W^{1/3}$ Col 3	$18W^{1/3}$ Col 4	$40W^{1/3}$ Col 5	IBD Col 6
6.50	5,600	2,055	3,360	7,465	9,330
7.00	5,740	2,100	3,445	7,650	9,565
7.50	5,870	2,155	3,525	7,830	9,785
8.00	6,000	2,200	3,600	8,000	10,000
8.50	6,120	2,245	3,675	8,165	10,205
9.00	6,240	2,290	3,745	8,320	10,400
9.50	6,355	2,330	3,815	8,470	10,590
10.00	6,465	2,365	3,880	8,620	10,770
11.00	6,670	2,440	4,005	8,895	11,120
12.00	6,870	2,520	4,120	9,160	11,445
13.00	7,055	2,585	4,230	9,405	11,755
14.00	7,230	2,655	4,340	9,640	12,050
15.00	7,400	2,715	4,440	9,865	12,330

Table 11–3
Variation of MPS QD factors with loadout

Percent HD 1.1	IBD	PTR	Ship-to-Ship
up to 52%	40.85	24.01	32.00
53	40.97	24.08	32.10
54	41.10	24.16	32.19
55	41.22	24.23	32.29
56	41.35	24.30	32.39
57	41.47	24.37	32.48
58	41.59	24.44	32.58
59	41.71	24.52	32.67
60	41.83	24.59	32.77
61	41.95	24.66	32.86
62	42.07	24.73	32.95
63	42.19	24.80	33.05
64	42.30	24.86	33.14
65	42.42	24.93	33.23

Chapter 12
Lightning Protection

12–1. General information

a. This chapter provides the minimum technical requirements for lightning protection of structures and areas

containing explosive materials. An LPS is required on all structures and areas containing, storing, or holding ammunition and explosives except in situations described in paragraph 12–4.

b. All LPS must provide protection that as a minimum meets the requirements of the 100–foot zone of protection (app H).

c. Lightning protection is designed to provide a conductive path to ground for a lightning strike. This chapter describes what is required for a lightning protection system, the materials to use (Table 12–1), and how to maintain the system in good working order.

d. Lightning normally starts in a cloud with the accumulation of separate negative and positive charge areas. The negative charge induces a positive region in the ground below. As the static electricity builds, a dim spark, called a step leader, emerges. This step leader jumps in 50–yard lengths. About 50 yards above the ground, it meets a rising positive spark. These two sparks form a path for the visible lightning stroke. As the stroke ends, in-cloud discharges reach toward the path. Sometimes another spark, called a dart leader, moves down the path and initiates a second visible lightning stroke. The peak temperature in the path lasts a few millionths of a second and reaches approximately 55,000 degrees F. The stroke produces more electricity in its brief life than all the electrical generators in the U.S. could produce in the same time. Yet the flash is so brief that the electric energy where it strikes would power a light bulb for only a month or so. Virtually all its energy is converted into light, thunder, radio waves, and heat.

12–2. Fundamental principles of lightning protection

a. The fundamental principle for protecting life and property against lightning is to allow a lightning discharge to enter or leave the earth without resulting damage or loss. A low impedance path should be offered, which the discharge current will follow in preference to all alternative high impedance paths offered by building materials such as wood, brick, tile, stone, or concrete. When lightning follows the higher impedance paths, damage may be caused by the heat and mechanical forces generated during the passage of the discharge. Most metals, being good electrical conductors, are virtually unaffected by either heat or the mechanical forces if they are large enough to carry the current that can be expected. The metal path must be continuous from the earth electrode system to the air terminal. Care should be exercised in selecting metal conductors (Table 12–1) to ensure the integrity of the lightning conductor for an extended period. A nonferrous metal such as copper or aluminum will provide, in most atmospheres, a lasting conductor free of the effects of rust or corrosion.

b. Parts of structures most likely to be struck by lightning are those that project above surrounding parts such as chimneys, ventilators, flagpoles, towers, water tanks, spires, steeples, deck railings, shafthouses, gables, skylights, dormers, ridges, and parapets. The edge of the roof is the part most likely to be struck on flat-roofed buildings.

c. An LPS consists of three basic parts that provide the low impedance metal path required:

(1) A system of air terminals or overhead wires on the roof and other elevated locations,

(2) A system of earth electrodes, and,

(3) A conductor system (down conductor) connecting the air terminals to the earth electrode system.

d. Properly located and installed, these basic components described in c, above, improve the probability that the lightning discharge will be conducted harmlessly between the air terminals and the ground terminals.

12–3. Locations requiring an LPS

a. Lightning protection systems will be installed on all facilities. Facilities are structures or locations used for development, manufacturing, testing, handling, storage, inspection, holding, or maintenance of ammunition or explosives.

b. An LPS will be required at a demilitarization or disposal site only if—

(1) Personnel are required to work or remain at the site during the approach of or during a lightning storm; and,

(2) The installation commander determines an LPS is necessary to protect personnel or equipment.

c. Underground storage (para 5–13) with metal or structural parts that have less than 2 feet of earth cover will be protected as an aboveground site.

12–4. Locations not requiring lightning protection

Under conditions specified in the following subparagraphs, lightning protection may be omitted from certain ammunition or explosives facilities.

a. An LPS may be omitted from earth covered magazines where the following conditions are met:

(1) Ammunition and explosives are stored in containers suitable for on-installation transport or Department of Transportation (DOT) approved shipping configuration.

(2) The reinforcing bars in adjacent structural elements are joined in a manner which provides electrical bonding between the elements. Techniques commonly used and approved in the construction industry to join reinforcing bars

are acceptable for this purpose. The steel arch must be similarly joined to the reinforcing bar in the floor or the bonding system.

(3) Ventilator metal is at least 3/16 inch thick and electrically connected to the earth electrode subsystem and magazine contents are protected from molten metal fragments of the ventilator if it is hit by lightning.

(4) Bonding, surge suppression, and ground requirements of this chapter are met.

b. Primary lightning protection (air terminals/external down conductors) may be omitted on earth covered magazines (ECMs) which have ground girdle subsystems constructed under Navy specifications provided the following conditions are met—

(1) The ECMs are used only to store ammunition and explosives in closed containers or in their approved shipping configurations.

(2) Bonding and surge suppression requirements are applied.

(3) Ventilators are made of a nonconducting material or of sheet steel greater than 3/16 inch thickness.

c. An LPS may be omitted on facilities other than earth covered magazines equipped with an adequate lightning warning system (para 12–9) when all the following conditions can be met—

(1) Operations can be terminated before the storm strikes;

(2) All personnel can be evacuated to IBD; and,

(3) The expected damage due to a lightning strike will not seriously affect the installation mission.

d. An LPS may be omitted on facilities without a lightning warning system other than earth covered magazines where—

(1) Personnel are not expected to sustain injury; and,

(2) The resulting economic loss of or to the facility, it contents, or surrounding facilities is minimal.

e. Lightning protection may be omitted on facilities that contain only noninitiable material where there is no fire hazard.

12–5. Requirements for lightning protection systems

a. This paragraph provides the minimum technical requirements for lightning protection of structures and areas containing explosive materials.

b. All LPSs designed to protect structures or areas containing explosives and energetic materials must provide a 100– foot zone of protection (see app H). This works on the principle that a sphere with a radius of 100 feet when it is placed on an LPS, will not touch the structure or object being protected as the sphere is rolled from protective point-to-point. It also will not touch the structure or object being protected before the sphere touches the ground.

c. All LPSs will have at least two conductive paths to ground. If the structure has a perimeter exceeding 250 feet, there will be a down conductor for every 100 feet of the perimeter or fraction thereof.

d. All LPSs will be bonded into the earth electrode subsystem of the facility being protected.

e. Down conductors may be coursed through the air without support for a distance of 3 feet or less. Down conductors that must be coursed through air for longer distances will be provided with a positive means of support that will prevent damage to or displacement of the conductor.

f. All new and renovated LPSs will be designed and constructed in accordance with TM 5–811–1, TM 5–811–3, and TM 5– 811–7.

g. The following subparagraphs contain guidance regarding locations and heights of air terminals that may be used to achieve the required 100–foot zone of protection on concrete or steel arch earth covered magazines. Other configurations are also considered to provide the 100–foot zone of protection if they were reflected in safety submissions or standard drawings approved by the Department of Defense Explosives Safety Board after 1984. Installations must determine if alternative configurations on older magazines afford the 100–foot zone of protection. Where an LPS installed before 1984 does not meet that criterion, it must be programmed for repair. The LPS repair program must prioritize corrective actions based on a hazard analysis of each violation consistent with AR 385–10. First priority will go to correcting deficiencies on facilities storing chemical ammunition (chemical surety material as defined in AR 385–61, exclusive of ton containers). Assistance in evaluating existing alternative arrangements or air terminals may be obtained through command safety channels. Alternative configurations for new magazines must be approved by site plans or safety submissions before construction.

(1) An earth covered magazine up to 40 feet in length can be protected by a system with two air terminals. For this configuration, one air terminal must be placed on the top center of the headwall. The front air terminal must extend at least 24 inches above the headwall. The other air terminal must be placed at the rear of the magazine on or close to the rear ventilator stack. If the rear air terminal is mounted on the ventilator stack (either the ventilator cap or concrete stack), it must extend at least 24 inches above the top of the ventilator cap. If the rear air terminal is not mounted on the ventilator stack, add one additional inch in height to the terminal over and above the minimal 24–inch extension above the ventilator for every inch it is mounted away from the stack. The metal ventilator cap must be bonded to the lightning protection system. An air terminal less than 24 inches in height above the ventilator is acceptable provided

protection consistent with the 100–foot striking arc can be demonstrated. However, the rear air terminal may never be less than 10 inches above any metal ventilator.

(2) An earth covered magazine more than 40 feet, but not more than 80 feet, in length can be protected by three air terminals. For this configuration, a front and rear air terminal must be mounted as described for 40–foot magazines in the preceding subparagraph. A third air terminal is required on the top center of the magazine. The center air terminal must be at least 24 inches in length.

(3) An earth covered concrete or steel arch magazine more than 80 feet in length could be protected by a front and rear air terminal as described for 40–foot magazines, and multiple air terminals between the front and rear that extend 24 inches above the headwall top surface. In this configuration, the air terminals must be equally spaced (but not more than 40 feet apart) along the crest of the arch.

h. Ammunition facilities, other than ECMs, with integral systems have the following minimal requirements—

(1) Air terminals will be at least 24 inches high.

(2) Air terminals are required on or close to ventilator stacks and caps. Those terminals must be at least 24 inches high and extend at least 10 inches above the ventilators they protect.

(3) Air terminals will be spaced not to exceed 25 feet apart on ridges, parapets, and around the perimeter of roofs. Where it has been necessary to exceed this spacing, the terminals shall be increased by 2 inches for each foot of increase over the 25 feet spacing between terminals. For large roof areas, additional air terminals may be required on the roof surface to achieve the 100–foot zone of protection. A grid of 24–inch air terminals on 25 foot centers (approximately 35 feet between terminals diagonally) will protect a horizontal roof surface.

i. Special requirements for integral systems are as follows:

(1) Air terminals will be at least 5 feet high above open or hooded vents emitting explosives dusts or vapors under natural draft.

(2) Air terminals will be at least 15 feet above open or hooded vents when explosives dusts or gases are emitted under forced draft.

12–6. Types of lightning protection systems

The following LPSs are listed in the NFPA and are the only ones currently approved for use—

a. Integral system (lightning rods). An integral system consists of air terminals mounted directly on the structure to be protected, down conductors, and a grounding system. This system is used to protect structures. Air terminal spacing will meet the requirements of the 100–foot zone of protection (app H).

b. Catenary system (overhead wire). A catenary system consists of a wire strung between posts. The wire is the equivalent of an air terminal and may or may not run directly into the earth electrode subsystem. The earth electrode subsystem will normally consist of ground rods at both ends of the system and be attached either directly to the wire or have an intermediary down conductor. Each pole will have an air terminal which extends at least 10 inches above the pole. This system is normally used to protect large open areas, such as a truck holding yard, but may also be used to protect structures.

c. Mast system. A mast system consists of an air terminal (lightning rod) on a mast, down conductors, and a earth electrode subsystem. This system can be used to protect either structures or areas. Masts will be separated by a minimum of 6 feet from the building or stack of munitions being protected.

12–7. General prohibitions

a. When aluminum is used, the following applies—

(1) Aluminum lightning protection equipment will not be installed on copper roofing materials or other copper surfaces or where exposed to runoff from copper surfaces.

(2) Aluminum materials will not be used where they come into direct contact with the earth. Fittings used to connect aluminum down conductors to copper or copper-clad grounding equipment will be bimetallic. Bimetallic connectors will be installed at 18 inches or higher above the earth level.

(3) Connectors and fittings will be suitable for use with the conductor and the surfaces on which they are installed. Bimetallic connectors and fittings shall be used for splicing or bonding dissimilar metals.

(4) An aluminum conductor will not be attached to a surface coated with alkaline-base paint, embedded in concrete or masonry, or installed in a location subject to excessive moisture.

b. Copper lightning protection materials will not be installed on aluminum roofing, siding, or other aluminum surfaces.

c. Galvanized steel will not be used in areas where atmospheric conditions are destructive to galvanized steel. Where galvanized steel conductors are used, the individual wires of the cable will have a protective coating of zinc (hot-dipped process). This treated cable must be capable of withstanding four 1–minute immersions in a standard copper sulfate solution without showing a fixed deposit of copper.

d. Where copper-clad steel is used, the copper covering will be permanently and effectively welded to the steel core.

The portion of copper will be such that the conductance is not less than 30 percent of the conductance of an equivalent cross-section of solid copper.

e. Stainless steel is very susceptible to corrosion in many soil conditions. Extreme caution will be used along with a proper soil analysis when this material is used. Records of the soil analysis will be kept as a permanent part of the lightning protection records.

f. Steel arch and reinforced concrete arch magazines with design discontinuities between the steel in the arch and the steel in the floor should not be used to store ammunition and explosives.

12–8. Bonding

a. Protection from side flash shall be obtained by either separation distance or by bonding. The required separation distance shall be determined by using the formula in NFPA 780, 'Lightning Protection Code' as indicated below. Bonding is used to reduce the possibility of a side flash and is used to ensure no electrical potential differences are produced by lightning current. Chapter 3 of NFPA 780 shall be used to determine the minimum bonding requirements except as modified herein.

b. For buildings which are 36 feet in height, or less: Bonding will be required for large masses of metal (400 inches square or larger surface area) located on the exterior, or within facilities, if the object is within six feet of an opening or within six feet of any part of the LPS. Examples include facility metal items such as radiators, tanks, permanent machinery, stair rails, ventilator, metal doors, air conditioning ducts, metal columns and metal siding.

c. For buildings greater than 36 feet in height: Bonding will be required as specified in NFPA 780, Chapter 3.

d. The material used to bond the LPS to the grounding loop conductor will meet the requirements set forth in Table 12-1. The resistance of any object bonded to the LPS will not exceed one ohm Exceptions are noted in Table 6-1.

e. Fences which come within 6 feet of an explosives structure will be bonded to the structure's LPS or its grounding system.

f. Railroad tracks which run within 6 feet of an explosives structure will be bonded to the structure's LPS or its grounding system. If the tracks are used to carry electrical signals, they will have insulated joints immediately external to bond the LPS's ground loop conductor. If these tracks enter a facility, they will also be bonded to the frame of the structure or equivalent.

12–9. Lightning warning systems

a. Lightning warning systems provide a positive, reliable means of continuously monitoring and recording atmospheric voltage gradient. They can detect atmospheric conditions that may produce lightning in the vicinity. Lightning warning systems that are installed and properly maintained can detect thunderstorms up to 200 miles away and indicate the direction of approach.

b. Installations with lightning warning systems will establish a specific criteria for terminating ammunition and explosives operations at the approach of a thunderstorm. This criteria will be based on the sensitivity of the operation involved and the amount of time required to terminate operations safely.

c. Installations without lightning warning systems will also be required to develop criteria for evacuating ammunition facilities at the approach of a storm. The decision to terminate an operation and/or evacuate must be determined on a case-by-case basis pending an evaluation of the hazards to operations and support personnel. Procedures should identify a responsible individual who can decide when evacuation is necessary. Following are some examples of facilities that should be evacuated in the event of a probable electrical storm—

(1) All operations involving EEDs and exposed explosives or propellants.

(2) Buildings containing explosives dusts or vapors, whether or not equipped with approved LPSs and locations within IL distance of these facilities.

(3) Outdoor operations with unpackaged munitions or ammunition operations being conducted without lightning protection.

12–10. Structural grounds

On all new construction and extensive renovation, the structural steel in all explosives facilities will be bonded to the facility grounding system. No greater than 1 ohm resistance will exist between the structural steel and the grounding system. Testing will be in accordance with paragraph D–3.

12–11. Grounding

For details on grounding, use Table 12–1 and paragraph 6–13.

12–12. Surge protection

a. An LPS for ammunition and explosives structures will use surge protection for incoming conductors. One or more

of the following will be provided on all incoming metallic power, communication, and instrumentation lines to reduce transient voltage to a harmless level—

(1) Lightning arresters,
(2) Surge arresters,
(3) Surge protectors,
(4) Surge suppressors,
(5) Transient power suppressors, and
(6) Isolation transformers.

b. These power and communication lines will enter the facility in underground shielded cables or in metallic conduits which enter the ground at least 50 feet from the facility. In addition, intrusion detection systems and other metallic lines will run underground for at least the last 50 feet up to the structure. Surge suppression for incoming conductors must include suppression at the entrance to the building from each wire to ground. The use of low-pass filters will be considered for added protection on specific critical electronic loads as determined by the user.

c. Fiber optic cables do not need to run underground before entering the building.

d. Steam, water, and air conditioning lines may run above ground as long as they are bonded to the structure's LPS before entering the structure. If these lines are not bonded to the LPS, they will run the last 50 feet to the building underground.

12–13. Visual inspection requirements

a. Components of the LPS will be visually inspected at intervals specified in Table 6–1.

b. Components of the LPS will be inspected in accordance with paragraph D–2.

12–14. Electrical testing requirements

a. The LPS will be tested at intervals specified in Table 6– 1.

b. The LPS will be tested per paragraph D–3.

c. The resistance of any component of the LPS will not exceed the value specified in Table 6–1.

d. The resistance of any metal object bonded to the LPS will not exceed the values specified in Table 6–1.

e. Any standard ohm meter that is capable of reading 1 ohm with a manufacturer's certified accuracy of 0.1 ohm and capable of measuring bond connections for large facilities can be used. Analog meters can continue to be used but all newly procured meters must have a resolution of 0.1 ohm as well as the 1 ohm capability with an accuracy of 0.1 ohm.

f. Some installations have LPSs that are unique to their particular location. Compliance with all testing details as stated in this chapter may not be practical or possible due to variations in building features, nonavailability of as-built drawings, or even terrain features (rock or concrete-covered ground near structures to be tested). When strict compliance for test and inspection of a facility cannot be accommodated, installations must make maximum use of expertise available; that is, electrical engineers, at their command and develop a reasonable and well-documented LPS test and inspection plan within the guidance of this chapter. This plan will be forwarded to the installations next higher headquarters for review and, once approved, retained with the installation's permanent LPS records.

12–15. Records

The inspection and test reports and/or records will be maintained in the installation safety office, unless an alternate office is specifically designated by the installation commander. Records of tests and inspections will be kept on file for the last 30 years. These records will be reviewed for deficiencies and trend analysis. Significant variances will be analyzed to determine the cause and indicated repairs must be made.

12–16. Truck holding areas

For designated established truck holding areas, lightning protection must be applied. For undesignated truck holding sites used in support of field training exercises, lightning protection is not necessary if the following requirements are met—

a. Explosives quantity distance limits and vehicle separations are strictly enforced.

b. Onsite security personnel are kept to a minimum.

c. The sites are located away from lightning conductors and attractors.

12–17. Lightning protection for empty facilities

Empty ammunition and explosives facilities that have been inspected, certified empty, and sealed (with numbered and recorded seals) will be considered as no longer used for development, manufacturing, testing, handling, storage, maintenance, demilitarization, and/or disposal of explosives or ammunition. These facilities will no longer require either a visual inspection or electrical test of the LPS as described in this chapter. All visual inspections and electrical tests required by this chapter will, however, be performed before reactivating the ammunition and explosives facilities. This requirement is applicable to empty facilities at active installations as well as facilities at installations on the Base Closure List.

Table 12–1
Lightning protection systems

Item	Material	Size Requirements	Restrictions
Ground rod	1. Copper 2. Copper-clad steel 3. Stainless steel[2] 4. Galvanized steel[3]	0.75 inch in diameter or larger; not less than 10 ft long	1. The top of the rod must be at least 12 inches below the finished grade. 2. Must be located 3 to 8 ft beyond the perimeter of the building foundation. 3. Must be free of paint or other nonconductive coatings.
Ground loop (counterpoise)	1. Stranded copper 2. Copper-clad steel cable	Must be at least 1/0 AWG with no single strand less than 17 AWG (0.045 inch) in size	1. Must be at least 30 inches below the finished grade. 2. Must be located at least 3 ft, but not more than 8 ft from the building foundation or footing. 3. All bends in the cable must be not less than 90 ^{o} .
Air terminal	1. Solid copper 2. Copper-clad steel 3. Hot-dipped galvanized steel[3]	Must be at least 24 inches high and extend at least 10 inches above the structure to be protected. Must be 3/8 inch in diameter (Class I)[4] or 1/2 inch (Class II) [5] in diameter below the taper	1. Air terminals will be either tapered to a sharp or blunt point. 2. Separate points are not required on top of air terminals; but, if they are used, they shall be substantial and securely attached by screw or slip joints.
Air terminal	1. Solid aluminum[1]	Must be at least 24 inches high and extend at least 10 inches above the structure to be protected. Must be 1/2 inch in diameter (Class I)[4] or 5/8 inch (Class II)[5] in diameter below the taper.	1. Air terminals will be either tapered to a sharp or blunt point. 2. Separate points are not required on top of air terminals; but, if they are used, they shall be substantial and securely attached by screw or slipjoints.
Catenary (overhead wire) system	1. Copper 2. Copper-clad steel 3. Aluminum[1] 4. Stainless steel [2]	A continuous run of wire not less than 1/0 AWG	1. Overhead cable must be supported by masts to ensure a separation of at least 6 ft from the protected structure. 2. If the wire parallels a structure for more than 50 ft, this distance (6 ft) must be increased 1 ft for every 10 ft above 50 ft. 3. The minimum separation in either 1 or 2 apply to the distance that the supporting masts must be from the structure also. 4. An air terminal must be placed on the top of each mast (See air terminal).
Air terminals	1. Tubular aluminum[1] 2. Tubular copper	Must be at least 24 inches high and extend at least 10 inches above the structure to be protected. Must have an outer diameter of at least 5/8 inch below the taper. Minimum wall thickeness will be 0.033 inch for copper and 0.064 inch for aluminum.	1. Air terminals will be either tapered to a sharp or blunt point. 2. Separate points are not required on top of air terminals; but, if they are used, they shall be substantial and securely attached by screw or slip joints.
Main conductor, cable	1. Copper	Minimum strand size is 17 AWG (0.045 inch) (Class I) [4] or 15 AWG (0.057 inch) (Class II)[5] . The weight of the wire will be at least 187 lbs per 1,000 ft (0.187 lbs per foot) (Class I) [4] and 375 lbs per 1,000 ft (0.375 lbs per foot) (Class II)[5].	1. The down conductor will be as nearly vertical as possible. 2. Bends will not be less than 90° with minimum radius of 8 inches.

Table 12–1
Lightning protection systems—Continued

Item	Material	Size Requirements	Restrictions
Main conductor, cable	1. Aluminum[1]	Minimum wire size is 14 AWG (0.064 inch) (Class I) [4] or 13 AWG (0.072 inch)(Class II)[5] . The weight of the wire will be at least 95 lbs per 1,000 feet (0.095 lbs per foot) (Class I)[4] or 190 lbs per 1,000 feet (0.190 lbs per foot (Class II)[5].	1. The down conductor will be as nearly vertical as possible. 2. Bends will not be less than 90° - minimum radius of 8 inches.
Main conductor, solid strip	1. Copper	The outside diameter will be at least 0.5 inch. Minimum thickness will be 0.051 inch. Minimum width will be 1 inch.	1. The down conductor will be as nearly vertical as possible. 2. Bends will not be less than 90° with minimum radius of 8 inches.
Main conductor, solid strip	1. Aluminum[1]	Minimum thickness will be 0.064 inch. Minimum width will be 1 inch.	1. The down conductor will be as nearly vertical as possible. 2. Bends will not be less tha 90 ° with minimum radius of 8 inches.
Bonding strap (solid or stranded)	Copper	The strap will not be less than 26,240 CM in cross section. Each wire will be at least 17 AWG (0.045 inch)	None
Bonding strap (solid or stranded)	Aluminum[1]	The strap will not be less than 41,100 CM in cross section. Each wire will be at least 14 AWG (0.064 inch)	None
Bonding strip	Copper	The strip will be at least 0.051 inch thick and 0.5 inch wide.	None
Bonding strip	Aluminum[1]	The strip will be at least 0.064 inch thick and 0.5 inch wide.	None

Notes:

1. Where aluminum is used, care shall be taken not to use it in contact with the ground or elsewhere where it will rapidly deteriorate. Conductors will be electrical grade aluminum.
2. Research has been presented that warns that stainless steel is very susceptible to corrosion in many soil conditions. A proper soil analysis will be conducted before using this type of rod.
3. Galvanized steel will not be used in atmospheric conditions which are destructive to it.
4. Class I specifications apply to buildings or structures 75 feet or less in height.
5. Class II specifications apply to buildings or structures which exceed 75 feet in height.
6. Unless otherwise noted, specifications in this chapter apply to Class I structures.

Chapter 13
Explosives Storage Requirements

13–1. General requirements

This chapter sets forth the requirements for storage of ammunition and explosives within the U.S. Army. Explosives and ammunition should be stored in buildings designed, designated, and isolated for this purpose.

a. When standard magazines are not available, the buildings used must afford protection against moisture and excessive changes in temperature and have means for adequate ventilation. The floors will not be wood or of a material that would produce dust. In structures where heat is permissible, only authorized heating equipment, as specified by the building safety submission will be used (chap 8). Open fires or heating by stoves is not permitted. The buildings are not to be used for any other purpose when ammunition is present. Ammunition (except limited quantities of small arms) and explosives will not normally be stored in basements, attics, or other portions of barracks, company supply rooms, general storehouses, or any buildings being used for other purposes.

b. Ammunition will be stacked by lot number in stacks and arranged so that air may circulate freely beneath and throughout the stack. When multiple lots are stored, all items or containers of a single lot should be stored together and the line of separation between lots must be clearly indicated with a DA Form 3020–R (Magazine Data Card), equivalent marking, or physical separation. Lots of ammunition must never be mixed randomly. Except in earth covered magazines, tops of ammunition stacks will be below the level of the eaves but no closer than 18 inches to the roof to avoid the heated space directly below the roof. In earth covered magazines, ammunition will not touch the ceiling or sides of the earth covered magazine. In heated warehouses or other buildings, ammunition stacks will not be closer than 18 inches to radiators or heaters. The bottom layer should be raised from the floor about 3 inches. Stacks

must be level; if necessary, dunnage, shims, or wedges will be used to prevent the stacks from tipping. Stacks will not be so high that ammunition or its containers in the lower layers will be crushed or deformed.

c. Boxes, cases, and other containers of ammunition should be clean and dry before being stored. Ammunition containers will not be opened in a magazine (except as detailed in para 13–2i and chap 14). They should not be stored after having been opened unless they are securely closed, except that ammunition and explosives in damaged containers in the process of being repaired may be stored overnight in magazines. When it is necessary to store ammunition and explosives overnight in damaged containers, they should be separated from serviceable ammunition. Repair or change of container can be accomplished at intraline distance (minimum distance of 100 feet from combustible storage structures or 50 feet from noncombustible structures) from the magazine based on the quantity of explosives at the repair or change site. Magazine doors will be kept closed during such work.

d. Unpackaged rounds or components will not be kept loose in a magazine containing other ammunition packed in accordance with approved drawings. Empty containers, excess dunnage, or tools should be permitted to remain in a magazine only during the period of time required to complete the job for which they are being used. No oily rags, paint, and other flammable materials will be present in a magazine containing ammunition or explosives.

e. Liquid propellants, flammable liquids, and gases, corrosives, and oxidizers will not be stored with ammunition. Nonflammable gas; for example, argon, can be stored in the same storage structure with the ammunition it supports. When the nonflammable gas is stored with the ammunition, valves must be protected from inadvertent impact or packed in approved DOT containers.

f. Lethal and incapacitating chemical ammunition must be stored separately from conventional ammunition and other types of chemical ammunition. Storage of chemical ammunition should be planned so the containers can be inspected for leaks and easily removed. This includes bulk agents as well as assembled munitions.

g. Ammunition containing explosives or combustibles such as black powder, tracer composition, or pyrotechnic mixtures which deteriorate rapidly in damp or high temperature environments should be stored under the best cover available. Buildings which protect against dampness and have adequate ventilation are preferable.

h. The amount of necessary combustible materials (dunnage, pallets) used in magazines will be kept to the minimum essential.

i. When a magazine becomes empty, the following procedures will be followed—

(1) When the last item is removed from a magazine, the magazine will be inspected. An empty magazine need not be reinspected before being reused for storage provided that:

(a) It was inspected after it was emptied.

(b) Magazines and storage formerly used to store chemical surety material have been certified free of toxic hazard.

(c) All defects noted during the inspection have been verified as being corrected.

(2) Empty magazines must be sealed with a numbered seal to ensure that ammunition is not stored without proper notification of the ammunition, security, and surveillance organizations. Local procedures must ensure notification. Integrity of the seals will be assured at least every 7 months.

(3) Empty magazines at installations on the base closure list will be considered as no longer used for storage of explosives or ammunition. Once these empty facilities are inspected, certified empty, and sealed with a numbered seal, they no longer require either the visual inspection or electrical testing for the lightning protection and grounding system. All required inspections and electrical tests must be performed before reuse.

13–2. Magazine storage of explosives and ammunition

a. Magazines and magazine areas. A segregated area will be set aside to store only ammunition and explosives. Magazines or open revetted sites in the magazine area may be used for storing ammunition-related inert items.

b. New storage magazines. New storage magazines should be of the standard earth covered type. Plans and specifications for these structures may be obtained from the U.S. Army Corps of Engineers (USACE), Huntsville Division.

c. Magazines.

(1) *Earth covered magazines.* This group includes reinforced concrete-oval arch, Stradley igloo, steel semicircular-arch type, hillside, and subsurface-type magazines. Earth covered magazines are preferred for the storage of all items of ammunition and explosives which require special protection for safety and/or security.

(2) *Standard ammunition magazines (commonly called standard magazines), classed as aboveground magazines.* These magazines were designed to store fixed rounds or separate loading projectiles. For future use, they should be restricted to storing Classes/Divisions (04)1.2, (08)1.2, (12)1.2, 1.3, and 1.4 materials (excluding rockets and rocket motors). The storage capacity of the magazines is not stated in definite figures since the number of items which can be stored is regulated by the appropriate Q-D tables.

(3) *High explosives and black powder magazines, classed as aboveground magazines.* These magazines were designed to store bulk explosives, such as black powder, TNT, Tetryl, and Explosive D and may be used for this purpose if more desirable storage space cannot be obtained.

(4) *Primer and fuze-type magazines, classed as aboveground magazines.* These magazines were designated for storing primers, primer detonators, adapters and boosters, and fuzes of all types. When it is necessary to use magazines

of this type, they should be restricted to storing Classes/Divisions (04) 1.2, 1.3 (except rockets and rocket motors), and 1.4 ammunition and explosives.

(5) *Service magazines and service storage buildings.* These buildings are used for temporary storage of the minimum amount of explosives necessary for safe and efficient processing operations at an associated explosives operation. Construction details of such magazines vary, depending upon local circumstances. However, consideration should be given to using fire-resistant materials and/or fire-resistive construction.

d. Preferred magazine usage for explosives and ammunition storage. Ammunition and explosives stored in earth covered magazines are better protected from external sources of initiation than items in aboveground magazines. Earth covered magazines also provide better temperature control than aboveground magazines and are particularly desirable for storing solid propellants and pyrotechnics.

e. Temperature control.

(1) Sudden changes in temperature may damage airtight containers or may result in excessive condensation. If the ambient temperature in an aboveground magazine exceeds 100 degrees F for a period of more than 24 hours, the magazine should be cooled by wetting the exterior of the building with water and by opening the doors and ventilators after sunset and closing them in the morning. If these methods do not effectively lower the temperature, the commander will decide whether the materials should be removed to some other magazine.

(2) Storage magazines in general should not be heated. An exception is made in the case of magazines where heating may be necessary to prevent condensation of moisture, to maintain constant temperature, or other reasons. Where a suitable heating apparatus is used to heat a magazine, it must be arranged so that explosive materials are kept at least 18 inches from the heating element.

f. Magazine operational requirements. The following requirements will be met wherever ammunition and explosives are stored:

(1) Loose components of ammunition, packing materials, conveyors, forklifts, skids, dunnage, empty boxes, and other similar material will not be stored in a magazine containing ammunition or explosives.

(2) Vegetation around all ammunition and explosives storage locations will be controlled as specified in chapter 3.

(3) Every worker must have an unimpeded path to an exit. The number of crews will not exceed the number of exits. Two or more doors must be unlocked and ajar when personnel work in magazines having more than one door. In the case of a structure with one entrance with double doors, both doors must be ajar. In storage magazines that have two jack-up style doors, only one must be open.

g. Stacking.

(1) Ammunition and explosives will be stored in containers as prescribed by approved drawings and specifications and should be stacked and arranged in a magazine in accordance with approved drawings listed in DA Pam 75–5. Explosives or ammunition in stacks will be grouped and identified according to lots. General rules set forth in (2) and (3) below should be followed in the absence of, or when operational necessity prevents adherence to, applicable storage drawings.

(2) Methods used for stacking must provide good ventilation to all parts of the stack. Adequate dunnage will be used when necessary for this purpose.

(3) Aisles will be maintained so that munitions in each stack may be inspected, inventoried, and removed for shipment or surveillance test. The aisles will not be obstructed so that personnel may escape quickly in emergency situations.

(4) Ammunition that is returned from users without proper packaging should be repackaged in accordance with approved drawings and specifications prior to storage.

h. Loose rounds, damaged containers, and so forth. Loose rounds of ammunition or single fiber containers with rounds therein will not be stored in magazines containing ammunition items which are packed in accordance with approved drawings; however, they may be stored in magazines set aside exclusively for them. Incomplete boxes of ammunition and explosives may be stored in magazines containing items which are packed in accordance with approved drawings. The boxes must be marked conspicuously to identify the contents and quantities and placed in designated locations. Explosives and ammunition in damaged containers will not be stored in a magazine with ammunition in serviceable containers. (See para 13–1*c* for exceptions.) Such containers will be repaired or the contents transferred to new or serviceable containers. Open containers and containers with covers not securely fastened must not be allowed in magazines except, consistent with security requirements, material in service magazines in which hazard analysis has verified that the storage configuration does not decrease safety. (See chap 14 for exception for basic load ammunition.)

i. Operations permitted in magazines containing explosives and ammunition. If the space available for operations inside the magazine is inadequate to prevent crowding or ensure rapid egress, the following operations incident to

storage, inspection, inventory, and shipping are permissible outside the magazine. Use of an adjacent apron is permissible for the following operations—

(1) Repalletization and replacement of defective banding.

(2) Removal and replacement of shipping bands on bombs.

(3) Removal and replacement of grommets on separate loading projectiles.

(4) Removal of bomb and projectile plugs for inspection of fuze cavities, cavity liners, and threads.

(a) Prior to removing a plug, the exterior surface of the projectile or bomb must receive a thorough (360 degrees) visual inspection for signs of contamination. Loosening or removal of plugs is not permitted where there is evidence of exposed explosives in the threads or cavities in the form of dust, spillage, or explosives contaminated exudate. When such contamination is encountered, plug removal must be done in a designated maintenance area in accordance with a local SOP. When there are no exposed explosives in the threads and/or cavities, the item may be cleaned and preservatives applied if power driven tools, highly flammable or toxic solvents, or ferrous brushes are not used. Plugs will be removed from the magazine for cleaning.

(b) Do not apply undue force during any phase of the operation; the only acceptable plug removal tool is a torque wrench designed to break away at excessive torque levels.

(5) Marking of containers

(a) No open containers of flammable liquids are permitted.

(b) Use of minimum essential quantities of flammable liquids is allowed outside of the magazine.

(6) Operations incident to the inspection of separately packed propelling charges and bulk solid propellants.

(7) Air test of propelling charge containers. (See para 13–5.)

(8) Preservation and packaging of small arms ammunition, unpacking, linking, and repacking provided there is sufficient room in the magazine and normal precautions are taken.

(9) Operations incident to liquid level determination using a probe sensor.

(10) Operations incident to visual inspection and/or inventory of unit basic load ammunition.

j. Operations permitted outside of magazines. Except as enumerated above, containers of explosives and ammunition will not be opened or repaired in any magazine containing explosives or ammunition. If special facilities are not available, inspection and repair may be done in the open if the following distances are kept:

(1) At least 100 feet or intermagazine distance, whichever is greater, from aboveground magazines and the unbarricaded door end of earth-covered magazines. This distance will be based on the quantity of explosives at the operation.

(2) At least 50 feet or intermagazine distance, whichever is greater from the sides and rear of earth covered magazines. This distance will be based on the quantity of explosives at the operation.

k. Protection from moisture or excessive heat. Ammunition, pyrotechnics, solid propellants, and propelling charges are adversely affected by dampness and extreme heat. Storage drawings in DA Pam 75–5 provide stacking schemes that should provide adequate ventilation.

l. Repairs to magazines.

(1) Magazines must not be repaired until prevailing conditions have been evaluated and it has been decided whether the contents are first to be removed. Under no circumstances will repairs be made to the interior of magazines containing bulk explosives. Under normal conditions roofs, ventilators, lightning rods, doors, and other parts of or appendages to the exteriors of magazines containing bulk explosives may be repaired without first removing the explosives. In addition to repairs of this type, minor repairs may be made to the interior of magazines containing finished ammunition or ammunition components.

(2) When magazines are repaired, the general safety requirements set forth in this pamphlet are mandatory, particularly those relating to eliminating fire hazards. The following special requirements are also applicable:

(a) All work will be done by competent workmen under competent supervision.

(b) The floor in the immediate vicinity of the repair must be thoroughly cleaned.

(c) No work requiring soldering, the melting of asphalt, or using flame or any heat-producing equipment will be done inside a magazine containing explosives or ammunition. To do this type of work, the magazine must be emptied and a hot work permit obtained in accordance with paragraph 3–7 of this pamphlet.

(d) Magazines in which repair work has been done will be inspected by competent authorized personnel (for example, facilities engineers) after completion of the work.

(3) When melting pots or any other heat-producing apparatus are authorized by the commander for use in any ammunition and explosives storage area, the equipment must be kept at least 90 feet from the ammunition or explosives location. When necessary, baffles and screens should be used to confine sparks and flames to heating apparatus.

m. Telephones in magazine areas. Telephone communication should be provided in ammunition and explosives magazine storage areas. All telephones that are located outdoors should be protected from the weather.

13–3. Outdoor storage

a. Outdoor storage of ammunition is neither desirable nor recommended and should be used only as an emergency expedient. Commanders will take steps necessary to provide adequate storage structures. When magazine storage is not available, every effort should be made to provide covered storage.

b. Sites for outdoor storage will be separated from magazines, other facilities, and each other in accordance with the Q-D requirements of chapter 5.

c. The storage sites will be level, well-drained, and free from readily ignitable and flammable materials. The supporting timbers or platform upon which the ammunition is stored will be well constructed to prevent falling, sagging, and shifting of the ammunition. Steel dunnage should be used where practicable. In order to assure stack stability and free circulation of air, not less than 3 inches of dunnage should be used between the bottom of the stack and the earth floor. Fire-resistant, waterproof overhead covers should be provided for all ammunition. An air space of not less than 18 inches should be maintained between the top of the stack and the cover. Sides of covered stacks also may be protected by non-flammable or fire-resistant covers provided a minimum of three inches clearance is maintained on all sides of stacks for ventilation.

d. Frequent inspections will be made to detect unstable stacks and accumulations of trash between or under stacks.

e. Excess dunnage should not be stored between outdoor sites and magazines nor between magazines. Excess dunnage storage sites should comply with applicable Q-D requirements, except that during outdoor storage operations, service supplies of dunnage may be located not closer than 50 feet from the stack being processed.

f. Suitable types of firefighting equipment and symbols should be provided. Fire Department personnel should be used to assist in the determining of type, size, and placement of equipment.

13–4. Holding yard

A holding yard provides a temporary safe location to park vehicles that are loaded with ammunition and/or explosives for training, convoy formation, or transporter pickup. The holding yard is an area designated to allow the loading of a vehicle which will be picked up before the ammunition supply point (ASP) would normally be opened. Areas designated for this purpose will be properly sited in accordance with chapter 5 of this pamphlet.

13–5. Storage of specific types of ammunition and explosives

a. Improved conventional munitions. The submunitions in improved conventional munitions (ICM) may become armed and sensitive to initiation if the cargo is ejected from its container or carrier. Emphasis must be given to blast, unit ejection, and fragment potentials in layout plans, process equipment and operations, storage, disposal, and other associated accident prevention considerations.

b. Black powder. Black powder in bulk, saluting, practice-bomb, and smoke-puff charges should be stored in dry magazines. Black powder will never be handled or stored in a barracks, general supply room, inhabited building, or any building heated by stoves or open fires. Magazines storing black powder should have conductive floors. Safety conductive (nonsparking) shoes will be worn in a magazine containing black powder. No work will be done other than storage operations and the clean up of spilled grains of black powder. Conductive nonferrous nonmetallic mats will be used at locations where operations such as repacking black powder are performed. Containers of saluting practice and smoke-puff charges will be stored with tops up. Containers of black powder will be carefully examined at the time of receipt for weak spots and holes, with special attention to looking for small holes, such as nail punctures, which are not immediately evident. Damaged black powder containers must not be repaired; their contents will be transferred to serviceable containers. If any black powder is spilled, work will stop until the spillage is carefully taken up and the spot washed with water. The powder taken up will be destroyed by dumping in water and later disposal by appropriate methods.

c. Military dynamite. Military dynamite, M1, is for general use as medium velocity blasting explosive to replace 60 percent commercial dynamite in military construction, quarrying, and demolition work. Dynamite, M1, unlike commercial dynamite, contains no nitroglycerin and will not freeze in cold or exude in hot weather. The composition does not absorb or retain moisture. Shipping containers do not require turning in storage. Safety in transportation, storage, and handling is better than that of 60 percent commercial dynamite, and should be used in lieu of commercial dynamite whenever possible.

d. Storage of bulk initiating explosives. Bulk initiating explosives must be stored alone or with similar compatible compounds. They must not be stored dry and will not be exposed to the direct rays of the sun. If long-term storage in shipping containers is contemplated, the container must be equipped with a cover having a port for observation of the level of liquid therein. The viewing port must be covered with a transparent plastic which is known to be compatible with the initiating explosive being stored. As an expedient only, bulk-initiating explosives may be stored in shipping containers that are not so equipped, provided they are stored in frostproof, earth covered magazines with containers on

end, only one tier high, and with passageways for inspection and handling. Bags of initiating explosives in storage containers must be under distilled water. Alcohol may be added to the distilled water to prevent freezing.

e. Bulk solid propellant and separate loading propelling charges.

(1) Propellant should be stored in magazines which are well ventilated and dry.

(2) Containers should be stored so the cover can be readily inspected or removed so that containers may be air-tested in storage.

(3) Bulk solid propellant and separate-loading charges are packed in airtight containers for storage. It is important that containers remain airtight until the propellant is used. When damaged or leaking containers are discovered, an examination of the contents will be made for the nitrous/nitric odor of decomposing propellant. If any such conditions are observed, the propellant will be segregated, reported, and disposed of in accordance with Industrial Operations Command (IOC) instructions. Propellants and propelling charges in containers should be stored so that they can be readily inspected. Only the minimum number of containers will be opened and then, only for the shortest period of time consistent with safe and efficient operations. They will not be exposed to the direct rays of the sun. When a shipment is received, every pallet load is given a visual inspection to see that it is not damaged.

(4) Metal containers for propelling charges are fitted with a test hole in the cover so that they can be tested for air tightness after the containers have been opened and closed. However, a motor-driven air compressor will not be taken into a magazine in which explosives or ammunition are stored. If the compressor is driven by a gasoline motor, the motor should be placed no closer than 50 feet to the magazine or to any explosive material. An electrically continuous path to ground will be maintained between the supply tank and container being tested. The entire system will be grounded prior to testing.

(5) The normal odor in a solid propellant magazine is a faint odor of alcohol-ether. If this odor is strong, it probably indicates a leaky container. Every leaking container will be repaired or the contents transferred to an airtight container. If the contents of any container show evidence of dampness or moisture, it should be segregated and reported. Leaks due to defective covers or gaskets may be repaired without removing the charge from the container or the container from the magazine, provided care is taken to guard against sparks. Repair of leaks in other parts of the container will be undertaken only after the the charge is removed from the container and the container from the magazine. Containers found unserviceable should have the charge removed and placed into an appropriately marked serviceable container. The empty, unserviceable container must be tagged and may be left in the stack until time of the shipment or restorage. No other repair operations on solid propellants or propelling charge containers will be permitted in a magazine containing explosives or ammunition.

(6) Personnel engaged in air-testing must become familiar with the odor and appearance of decomposing propellant. They should examine each container opened for air test for the characteristic odor. One of the first evidences of dangerous deterioration is the presence of the acrid odor of nitrous/nitric fumes in place of the normally present odor of alcohol-ether. The odor of decomposing propellant is so characteristic that it cannot be mistaken for the normally present odor.

(7) Some fine grain solid propellants having high percentages of nitroglycerin are almost as sensitive as black powder, and the same precautions will be observed. Inspection schedules must be maintained to ensure that deterioration will be detected in the early stages.

f. Separate-loading projectiles.

(1) Steel dunnage is preferred to wood; and, for storage in other than earth covered magazines, steel dunnage should be connected by electrical conductors and grounded. If it is necessary to use wood for dunnage, the amount should be kept to an absolute minimum. Unfuzed projectiles will be fitted with eyebolt lifting plugs. If it is necessary to move a fuzed projectile, it will not be rolled.

(2) Palletized projectiles will be stacked in accordance with approved drawings.

(3) Projectiles containing ICMs will have a fusible lifting plug.

g. Pyrotechnics. Pyrotechnics require protection against moisture, dampness, and high temperature. Pyrotechnic items must be given high priority for the best available protection because of their sensitivity. Pyrotechnic material that has been wet is hazardous to store; consequently, any boxes that show signs of dampness will be removed from a storage site and inspected. If the pyrotechnic material is wet, it will be destroyed. Certain kinds of this material deteriorate with age and have an expiration date on the containers. Loose pyrotechnic tracer composition, flare composition, and similar mixtures that have spilled from broken containers should be carefully taken up and covered completely with SAE 10 (EO–10) engine oil and removed for appropriate disposal.

h. Shaped charges. Shaped charges focus blast effect into a directional jet, resulting in greater penetrating ability than an equivalent sized unfocused charge. Because of this directional effect, special storage considerations apply.

(1) When packaging and storage criteria allow, shaped charges will be pointed toward the floor. When this is not

possible, shaped charges should be pointed toward an exterior wall. In an earth-covered magazine, shaped charges which face walls should face the side or rear walls.

(2) Shaped charges should not be pointed at any wall when explosives are stored on the opposite side of that wall, such as in a multicubicle magazine.

i. Rockets, rocket motors, and missiles.

(1) Rockets should be stored in a dry cool magazine out of the direct rays of the sun. They should not be stored in locations where temperatures exceed 120 degrees F. Prolonged exposure of rocket ammunition to either high or low temperatures may increase the normal rate of deterioration or render the motors more susceptible to ignition if subsequently handled improperly.

(2) Specific storage requirements apply when rockets are stored in a propulsive state.

(a) Earth covered magazines. This is the preferred mode of storage. Refer to the approved storage drawing (DA Pam 75–5) for orientation of items. Small rockets and missiles may be stored without regard to direction in which they are pointed except that they will not be pointed upward or toward the door or headwall.

(b) Aboveground storage structures. This is an allowable substitute storage mode when earth covered structures are not available. Orient items in the direction which presents the least exposure to personnel and property or toward strong artificial or natural barriers.

(c) All storage. If allowed by approved storage drawings (DA Pam 75–5), propulsive items should be stored pointed down.

(3) Any rocket, rocket motor, or missile, if not in a propulsive state, may be stored in any magazine without regard to the direction in which it is pointed.

(4) Care must be exercised to protect electrically initiated rockets or rocket motors from being ignited by stray electrical currents such as might arise from contact with extension cords, lights, or electrical tools or close proximity to radio transmissions.

13–6. Inert ammunition

a. Storage. Dummy or inert ammunition should not be stored in magazines with live or practice ammunition if other storage space is available. If it is necessary to store such items with live or practice ammunition, it will be segregated and identified clearly.

b. Inert items and components. These include those practice and service items manufactured or made empty or inert for use in training, on desk nameplates or stands, on display boards, in demonstrations or public functions, and in offices or work areas of engineers or other personnel. Ammunition and explosive items will not be rendered inert except by technically qualified personnel in accordance with established procedures. Activity or installation commanders will ensure that inert or empty ammunition and components under their control are properly identified.

c. Identifying inert or empty ammunition and components. Stenciling, painting, applying decals, or labeling inert or empty ammunition and components alone is not sufficient for identifying them as being inert or empty. Therefore, more positive identification is needed. The following procedures apply:

(1) Four holes no smaller than one-fourth inch will be drilled through each complete item. This includes fuze, body section, and cartridge case. The holes will be 90 degrees apart. When components such as detonators are too small for the one-fourth inch holes, fewer holes of smaller diameter can be drilled. Exceptions are as follows:

(a) Inert or empty projectiles used in target practice, practice bombs, drill bombs, or other empty or inert items whose designed use would be impaired by drilled holes.

(b) Items listed in supply manuals as standard for issue.

(c) Items on permanent display in Army museums if drilling would diminish their historical value. These excepted items are suitably identified when marked “INERT,” “EMPTY,” or “DUMMY.”

(2) In addition to being drilled, all empty or inert ammunition or components will be stamped or stenciled with the marking “EMPTY” or “INERT.” Markings must be clear and obvious.

(3) Inert, cloth-covered components such as bagged propelling charges will be marked “INERT.” Markings will be in durable, waterproof, fadeproof ink.

(4) Inert mortar sheet propellants will have the word “INERT” cut through each propellant increment.

(5) Small arms ammunition or small objects mounted on wall plaques or display boards, in display cases, or permanent museum exhibits will have the word “INERT” on an attached plate. The plate could be of metal, wood, or plastic permanently affixed to the display.

d. Inspections. Each item of ammunition or component that is part of a permanent museum display will be inspected by EOD personnel or other persons familiar with explosives. Museum curators will use DA Form 2609 (Historical Property Catalog) to record the date of inspection and inspecting unit. The museum curator will note in the remarks section of DA Form 2609 that the item was found to be or made inert.

e. Rendering ammunition inert. The conversion of a live ammunition or explosive item to an inert condition for display, training, or similar purposes will not be done unless the MACOM commander and the item manager approves. The conversion is an explosives operation and will be performed at a properly sited location (chap 5).

13–7. Unserviceable ammunition

a. Sources. Unserviceable ammunition generates from normal deterioration, improper storage, handling, improper packaging, and transporting, and from defects inherent in manufacture. Ammunition shipments received from other supply installations should be checked to detect unserviceable items. Ammunition handlers must be trained to recognize indications of unserviceability and report them for inspection.

b. Storage. Unserviceable or hazardous ammunition must not be stored with serviceable ammunition. Suspect and hazardous munition items will be segregated and stored separately from serviceable ammunition. Suspended stocks of ammunition will be clearly marked and lot-locator and magazine data cards posted to preclude issue.

c. Disposition.

(1) Unserviceable ammunition will be disposed of as rapidly as possible to preclude further deterioration and potential unsafe conditions. The DA Pam 738–750 provides guidance in disposing of unservicable ammunition.

(2) Whenever the commander of an ammunition supply installation becomes aware of ammunition in such a condition that he or she considers it to be dangerous, the commander will immediately order the destruction of the ammunition and will report this action to the next higher headquarters.

(3) Ammunition that has been abandoned by using units will be treated as unserviceable until it has been inspected by ammunition surveillance, and determined to be safe for storage, transportation, and use.

13–8. Storage of captured enemy ammunition

Captured enemy ammunition must be inspected as soon as possible after acquisition to determine the condition, type, and caliber. Any special or unusual characteristics which may be of interest to technical intelligence personnel should be noted and reported through appropriate channels. Ammunition that has been determined to be hazardous should be separated from serviceable stocks and disposed of as soon as possible. Serviceable enemy ammunition must not be stored with serviceable U.S. ammunition. It will be stored in a separate area from U.S. ammunition and, if possible, IBD from other ammunition. Information on the NEW of foreign ammunition can be obtained from military intelligence elements.

13–9. Chemical munitions

Chemical fillers include lethal, riot control, incapacitating agents, smoke producing agents, incendiaries, and pyrotechnic compounds related to the dissemination of these fillers. Chemical munitions include a variety of items, the effects of which depend primarily upon the chemical filler employed rather than explosion or fragmentation, even though they may contain explosive elements or pyrotechnic materials to activate them.

a. Chemical groups. For purposes of storing and handling, chemical fillers have been divided into groups, as defined below, based on the action of the filler, the degree and type of hazard, and the type of protection required.

(1) *Chemical Group A.* Chemical Group A (toxic agents) is not in the purview of this DA pamphlet. Safety requirements for Chemical Group A agents are contained in AR 385–61.

(2) *Chemical Group B.* Group B (for example, CG, CN, CN-DM, CS, HC, RP). This group consists of choking agents, blood agents, riot control agents, and screening smokes. Wearing a suitable protective mask is required to protect personnel against inhalation of vapors, particles, or smoke from burning agents. Since these agents will cause varying degrees of skin irritation, approved types of protective clothing (such as coveralls, protective masks, gloves, and so forth) will be provided and worn. They can be toxic or incapacitating by inhalation, ingestion, or by absorption through the skin.

(3) *Chemical Group C.* This group includes materials which are spontaneously combustible WP and PWP and for which special fire fighting techniques and materials are required. Personnel protection will be of the type that will protect against fire and heat. Toxic fumes are an associated hazard. At the present time, WP and PWP are the only two fillers in this group.

(4) *Chemical Group D.* This group consists of signaling smokes and incendiary and flammable munitions (for example, TH, IM, NP, PT) material for which conventional fire fighting methods except use of water, may be used. Protection from inhalation of smoke from burning incendiary mixtures is required.

b. Chemical munitions. The same group designations as used for fillers will be used for chemical munitions.

c. Structural requirements. Chemical munitions or agents will not be stored in magazines with floors which are made of wood or other porous material in which the agent may be absorbed, making decontamination difficult.

d. Handling. Chemical munitions must be handled carefully. They should not be dropped or jarred. The same equipment used for handling HE filled items may be used for handling chemical munitions.

e. Outdoor storage. When it is necessary to temporarily store Chemical Group B and C munitions outdoors, prior approval must be obtained from the MACOM on a case-by-case basis. The munitions should be covered with tarpaulins to protect them from the direct rays of the sun and from exposure to the elements unless the container itself affords reasonable protection. Munitions will be stacked to permit free circulation of air. Covering tarpaulins should be supported so as to permit free flow of air under the tarpaulins.

f. Handling of unserviceable chemical munitions.

(1) *Reporting of leaking or unserviceable items.* A report of any leaking or damaged chemical item will be made

immediately to the supervisor of the storage area who will initiate procedures to process the material toward disposition or correction and accomplish MACOM directed reporting procedures.

(2) *Processing of unserviceable items.* When damaged, leaking, or otherwise unserviceable items are discovered, they should be marked immediately for identification. These items will be removed from the storage structure promptly, if practical. If immediate disposition is not practical, then leaking munitions should be contained and segregated in a structure or area reserved for storage of such defective items.

(3) *Disposal.* Chemical fillers in bulk form and munitions containing chemical fillers, with or without explosives, will not be disposed of by burial or dumping into waterways. Production equipment, munitions, munition residue, and other items which have been contaminated with Chemical Group B, C, or D fillers will not be disposed of or released for sale as scrap until they have been thoroughly decontaminated in accordance with AR 385–61 and certified as being free of agents and/or explosives. Specific decontamination procedures contained in applicable publications for these items will take precedence over AR 385–61.

g. Personal protective equipment.

(1) *Protective masks.* Where respiratory protection is required, a program will be implemented for selection, use, inspection, testing, and maintenance that complies with TB MED 502. Individuals involved in these operations will be checked for a proper fit using DA Pam 385–61 and AR 11–34.

(2) *Protective clothing and equipment.* Other personal protective equipment such as coveralls, gloves, aprons, and boots will be issued according to the hazards presented by the chemical group being processed.

(3) *Storage and inspection of protective equipment.* Personal protective equipment will be placed where it will be immediately accessible for use. A list showing the quantity and type of equipment required to be on hand will be posted in the SOP. Centrally located protective equipment will be inspected prior to and after each use, and on a regularly scheduled basis thereafter. Equipment that becomes unserviceable will be replaced promptly.

h. First aid. Appropriate first aid and decontamination equipment will be readily available at each work site. Each employee involved in these operations will receive—

(1) Annual first aid training on signs and symptoms of exposure to these fillers.

(2) Whatever is appropriate first aid/self aid/buddy aid for each filler.

(3) How to use the appropriate first aid supplies and equipment.

i. Disposition of defective munitions. Destruction of chemical fillers will be accomplished in accordance with requirements outlined in regulations for the specific type of agent involved. As a matter of policy, open pit burning of incapacitating chemical filler or chemical-filled munitions in any quantity is prohibited. Further information on methods for destroying large quantities of chemical fillers and munitions will be obtained, through channels, from the Commander, U.S. Army Chemical Biological Defense Command (CBDCOM), Aberdeen Proving Ground, Aberdeen, MD 21010–5423.

j. Packing, marking, and shipping. Chemical fillers, munitions, and components will be packed, marked, and prepared for shipment in accordance with current drawings and specifications for the item involved (DA Pam 75–5). In addition, all applicable DOT regulations governing the shipment of chemical fillers and munitions will be observed.

13–10. Chemical Group B agents

Fillers in this group (choking agents, blood agents, riot control, and smokes) require protective masks be worn when fumes or smokes are present.

13–11. Storage of Chemical Group B agent munitions

a. Storage requirements. Chemical Group B munitions should be stored in earth covered magazines. Concrete floors treated with sodium silicate should be used. Rubberoid or other floor coverings should not be used.

b. Surveillance. Periodic pressure testing and, in some instances, sampling of containers is required to detect increases in internal pressure before they become dangerously high. Surveillance also includes inspection to detect leaks, breaks, or other defects in containers and valves.

c. Inspections. Specific entry procedures will be incorporated into the movement and storage SOPs. If munitions are leaking, protective masks will be worn and doors and ventilators will be opened. The leaking projectile or container will be located and disposed of (see para 13–14).

d. Safety. Protective masks must be readily available to all persons working in these magazines. Unboxed projectiles and containers may be handled without protective gloves unless contamination is noted, except for corrosive fillers (FM, FS, and RP). At least one person should be carrying a protective mask in case of an incident. He or she would be able to summon help if needed.

13–12. Special protective equipment for Chemical Group B agent munitions

a. Equipment availability. The special protective equipment, identified in b through d below, must be readily available to personnel working where Chemical Group B munitions are stored.

b. Personal protective equipment. Personal protective equipment consisting of protective masks, coveralls, and appropriate protective gloves, sufficient in number to equip all personnel required to work with Chemical Group B

munitions, will be centrally stored and maintained under close supervision. Personnel will be issued only serviceable protective masks, coveralls, and protective gloves. Personnel handling liquid corrosive chemical fillers will be issued and will wear eye protection, rubber boots, aprons, and gloves.

c. First aid equipment. The following first aid equipment will be centrally stored and issued to the person in charge of a group of personnel required to work with Chemical Group B munitions:

(1) Gas casualty first aid kit and individual first aid kits.

(2) Stretchers or litters.

(3) Woolen blankets.

d. Decontaminating material. The appropriate decontamination material and equipment as identified in the chemical's material safety data statement (MSDS) will be immediately available for responding to an accident or detection of a leaking munitions or container. Personnel will wear the minimum personal protective clothing and equipment as described in the MSDS unless otherwise directed by the local medical support organization.

13–13. First aid for Group B chemical agents

When performing operations involving group B chemical agents, all operations will be conducted with not less than two persons (buddy-system) with each person visible to the other at all times. Employees will be trained to recognize early symptoms in other personnel and be fully capable of administering first aid promptly and efficiently. After first aid treatment is completed, the victim will be evacuated for medical treatment (FM 8–285).

13–14. Leaking Chemical Group B agent munitions

Leaking Chemical Group B munitions must be disposed of in accordance with approved procedures. Personnel handling leaking items containing corrosive Chemical Group B agents will wear appropriate rubber boots, rubber aprons, and rubber gloves in addition to protective masks normally worn. No leaking agent should be allowed to come into contact with skin or clothing. Pending final disposal, leaking munitions will be removed from the magazine and temporarily stored in accordance with directions in the SOP.

13–15. Removal of spilled Chemical Group B fillers

If Chemical Group B fillers have leaked from ammunition or containers and have contaminated the floor or other containers, one of the treatments outlined in TM 3–250 will be used, depending upon the type of chemical agent involved. Protective masks, appropriate gloves, and boots will be worn during the procedure; if a corrosive agent is involved, adequate rubber boots and aprons will be worn.

13–16. Fire in Chemical Group B agent munitions magazines

If a fire involves or threatens buildings in which Chemical Group B munitions are stored, all persons within three-quarters of a mile will be notified to evacuate the area until all danger is passed. Members of the fire department and all others fighting the fire who may be exposed must wear a protective mask and coveralls. Danger to personnel downwind from a fire involving Chemical Group B filled munitions is not great, unless noncombustible toxic fillers such as phosgene are involved. Any projectile or container that has been exposed to fire will be considered dangerous and will be inspected by qualified EOD personnel to determine its condition after the fire. A report of the fire will be prepared in accordance with the provisions of AR 420–90 and AR 385–40.

13–17. Chemical Group C agents

a. White phosphorous. The WP is a yellowish, wax-like substance, which melts at 110 degrees F. Its most characteristic property is that it spontaneously ignites when exposed to air, burning with a yellow flame and giving off a large volume of white smoke. Smoke in field concentrations is usually harmless. Dense concentrations may cause irritation of the eyes, nose, and throat. The WP is intensely poisonous when taken internally.

b. PWP. The PWP is finely divided WP suspended in a gel of rubber and xylene. Like WP, PWP is spontaneously combustible when exposed to air.

13–18. Storage for Chemical Group C munitions

Chemical Group C munitions should be stored in fire-resistive magazines with crack-free concrete floors. Storage in earth covered magazines is preferred. Chemical Group C munitions will be stored in accordance with current drawings (DA Pam 75–5) and/or directives.

13–19. First aid and special equipment for Chemical Group C munitions

a. Personal protective equipment. Personal protective equipment consisting of fire resistant gloves and coveralls, and safety face shields, sufficient in number to equip all personnel required to work with Chemical Group C munitions, will be centrally stored and maintained under close supervision. These items will be issued to personnel working with

WP or PWP filled items and will be worn whenever leaks develop or are suspected. The M9 or M17 series or other approved protective masks will be immediately available at all times.

b. Self-aid. Self-aid comprises those aid measures which the individual can apply in helping himself or herself.

(1) If burning particles strike and stick to clothing, take off the contaminated clothing quickly before the phosphorous burns through to the skin. The immediate supervisor must decide whether to allow the contaminated clothing to burn itself out or to extinguish it based upon the job situation as specified in the SOP.

(2) If burning particles strike the skin, smother the flame with water, wet cloth, or wet sand. Keep the phosphorous covered with wet material to exclude air until the particles can be removed. WP and PWP continues to burn unless deprived of oxygen.

(3) Try to remove the particles with a knife, stick, or other available object. It may be possible to remove some particles with a wet cloth.

(4) If the eyes become contaminated, flush the eyes immediately with water. Tilt the head to one side, pull the eyelids apart with the fingers and pour water slowly into the eye so that it will run off the side of the face to avoid the spreading of the contamination.

(5) Report to the medical services as soon as possible.

c. First aid.

(1) First aid comprises the emergency actions undertaken to restore or to maintain vital body functions in a casualty. Detailed procedures will be developed by local medical officials and documented in operations SOPs.

(2) Whenever a casualty in a chemically contaminated area is unable to put on his or her protective mask, that must be done for him or her immediately by the nearest person able to do so, to prevent further exposure.

(3) Every individual must perform personal decontamination if physically able to do so. If he or she is incapacitated, decontamination must be done for that person as soon as possible by any one present who can be spared from emergency duties long enough to do so.

(4) If WP and PWP particles are burning flesh, immediately plunge the affected portions of the body burned by WP particles under water; this stops WP and PWP from burning. If WP or PWP particles are in the victim's face or eyes apply a continuous, gentle stream of water to the afflicted area or apply wet compresses until medical help is obtained.

d. Disposal of contaminates. Once the WP or PWP particles are removed, they must be placed in water filled containers pending subsequent disposal to prevent further injury to personnel in the surrounding area and eliminate the fire potential.

e. Fire fighting equipment. Water filled tubs, barrels, or tanks large enough to contain the items of WP filled munitions will be located adjacent to magazines, outdoor stacks, or other work area when actually working with such items.

13–20. Leaking Group C chemical munitions

a. Detection. Leaks in WP munitions can be detected immediately by the white smoke arising from the leak. As air contacts the WP, spontaneous ignition occurs. With leaking munitions of this group, the great risk is fire.

b. Immediate action upon discovering leaking munitions. During operations, the person discovering the leaking munitions will, where practical, submerge the leaker in one of the tubs provided. (Rubber protective equipment will not give adequate protection when exposed to high temperatures such as burning phosphorus. When burning phosphorus adheres to gloves, the gloved hand should be dipped into water.)

c. Disposal of leaking munitions. When a single leaking item has been discovered and has been immersed in water, it should be disposed of in an area where fragmentation will not be a hazard, where smoke will not create a nuisance, and where there is no dry vegetation which may be ignited, and in accordance with locally developed procedures.

13–21. Removal of Chemical Group C contamination

a. Precautions. If phosphorus has leaked on the floor or other parts of a magazine and has been extinguished, a fire guard must be stationed at the building until the spilled phosphorus has been completely removed. The water used in fire fighting will evaporate and permit the phosphorus to reignite. Phosphorus may remain on the floor for some time before it reignites. Phosphorus which has extinguished itself by forming a crust can be reignited if the crust is broken.

b. Removal procedures. Small amounts of phosphorus can be removed best by first scraping off as much as possible and then removing the rest by burning with a blowtorch or similar appliance. This method of removing phosphorus must not be attempted until all loaded munitions in the vicinity have been removed.

c. Surveillance. The magazine will be kept under surveillance for at least 2 weeks, as fire may break out again. Any deep cracks or crevices in the floor will be cleaned and filled up with cement mortar before munitions are restored in the magazine.

13–22. Fire in Chemical Group C munitions magazines

a. General requirements. In the event of a fire in a magazine containing Chemical Group C ammunition fitted with fuze or burster and packed in containers, the magazine will be evacuated if the fire cannot be rapidly controlled. (Fires in earth covered magazines will not be fought.) Firefighting efforts will be confined to saving adjacent magazines. In

all other fires involving Chemical Group C munitions which are stored without fuzes or bursters, the precautions in *b* through *c* below will be observed in fighting the fire.

b. Control of flames.

(1) Phosphorus, once extinguished, will either be immersed in water or continually sprayed to prevent the flames breaking out anew.

(2) The lowest pressure streams consistent with possibility of approach should be used; a high velocity stream of water tends to spread the fire.

c. Safety. Fire fighters will be closely supervised when fighting fire in WP munitions magazines because components becoming highly heated in a fire will explode with moderate violence, throwing burning containers and WP for some distance. Fire fighters must be withdrawn to safe distances when this danger becomes apparent.

13–23. Chemical Group D fillers

a. Thermite (TH). TH, a mixture of iron oxide, aluminum, and other substances, is a dark gray granular mass that requires an igniter to start burning; it burns with great rapidity at a temperature of 4300 degress F, with the iron oxide being reduced to molten iron. Thermate is a mixture of TH aluminum, barium nitrate, sulfur, and lubricating oil.

b. Incendiary bombs. Incendiary bombs may consist of a combustible body of magnesium metal alloy; inside is an igniter composition such as thermate. When ignited, the body of the bomb burns at a temperature of about 3700 degrees F. Other types (such as IM, NP, or PT filled bombs) have steel cases filled with thickened fuel. These operate by ejecting the burning thickened fuel over a wide area. The mixture is very difficult to extinguish.

c. Colored smoke mixtures. These mixtures contain a dye for the color of smoke desired and certain types of fuels. They do not contain HC.

d. Triethylaluminum (TEA). TEA is a pyrophoric colorless liquid which burns with a bright flame reaching temperatures approaching 2300 degrees F. The TEA reacts violently with water. Thickened pyrophoric agent (TPA) is a thickened version of TEA.

13–24. Storage of Chemical Group D munitions

Chemical munitions containing Chemical Group D fillers may be stored in any dry fire-resistive magazine.

13–25. Special protective equipment for Chemical Group D munitions

Boxed and unboxed munitions containing Chemical Group D agents may be handled without special protective equipment, but it is advisable to have protective masks available where incendiary materials or munitions items are involved. Protective masks will be worn when exposed to burning munitions or bulk chemical.

13–26. First aid for Chemical Group D munitions

No unusual first aid treatment is required for personal injuries occurring in handling Chemical Group D munitions. Burns should be treated in the same manner as those caused by flame. Persons severely affected from high concentrations of smoke should be evaluated by medical personnel.

13–27. Leaking Chemical Group D munitions

Any leaking munitions containing Chemical Group D fillers will be segregated. Instructions for disposing of large quantities of such munitions will be requested from Headquarters, U.S. Army Material Command, ATTN: AMCSF, 5001 Eisenhower Ave., Alexandria, VA 22333–0001. If necessary to destroy small quantities of leaking munitions of this group, they should be burned in a standard burning pit. Leaking bombs may be fired statically in a pit of a demolition ground where the fire risk is negligible. Where barricade protection for personnel is not available, a distance of 300 yards will be maintained if the bombs do not contain an explosive charge. Use criteria outlined in chapter 5, if the bombs contain an explosive charge.

13–28. Fire in Chemical Group D munitions magazines

a. The primary efforts of the fire fighters will be confined to preventing the spread of the fire in magazines containing Chemical Group D munitions (fires in earth covered magazines will not be fought). Normally, water is not used to fight fires of TH or mixtures containing fine metallic powders such as magnesium or aluminum. Incipient fires may be smothered by spraying the dry chemical from first aid extinguishers or covering with sand. Fire in a magazine containing Chemical Group D munitions will not be fought with water except where large quantities are used in proportion to relatively small quantities of these type munitions.

b. Triethylaluminum is explosive in water. Inert materials (for example, sand or dirt) are the best means to extinguish a TEA fire.

13–29. Termination of use of facilities storing ammunition and explosives

a. Each storage facility no longer used to store ammunition and explosives must undergo a process, within 180 days from the day of last use, to ensure ammunition and explosives and any visible explosives residues are removed. These procedures help ensure that no threats to human health or the environment remain when the unit is no longer used to

store ammunition and explosives. (Note: Ammunitions storage units (ASUs) that have been used to store waste military munitions must also comply with the closure procedures in Chapter 19.) These procedures will include:

(1) Emptying the storage facility of all ammunition and explosives and related materials.

(2) Cleaning the storage facility, as required, to remove any visible explosives residue.

(3) Visually inspecting the storage facility for the presence of remaining ammunition or explosives or visible explosives residue by a knowledgeable individual that the installation or responsible activity commander appoints.

(4) Removing from the storage facility all fire and chemical hazard symbols and marking the storage facility as empty.

(5) Securing the storage facility to prevent inadvertent use or access.

(6) Notifying the appropriate emergency response and regulatory authorities of the change in the storage facility's use.

(7) Recording, in permanent real estate records, the date the storage facility was inspected, the name and position of the inspector, and the results.

Chapter 14
Peacetime Operations

14–1. General

a. Full compliance with other chapters may not be possible during military operations other than war (MOOTW) or during contingency deployments. This chapter sets the minimum levels of acceptable risk for contingency deployment ammunition operations in a less than wartime environment. These provisions apply only if permitted by host nation laws and/or Status of Forces Agreements and authorized by the MACOM commander. Army units stationed at other service installations will follow this chapter to the extent the installation commander allows at the installation.

b. The provisions of paragraph 14-10 apply to contingency force operations when specifically approved by the MACOM commander.

c. The provisions of paragraphs 14-11 through 14-15 apply to Army training exercises.

d. The provisions of paragraph 14-16 apply to Army airfields in the Theater of Operations used only by military aircraft.

14–2. Site plan process

a. Explosive locations. All explosives locations falling within the scope of this chapter shall be approved through command channel by the Department of Defense Explosives Safety Board (DDESB). Site plan packages will be submitted for the following:

(1) Ammunition storage locations.

(2) Holding areas and operating locations, such as ports, railheads, ammunition maintenance, repair and renovation areas and sling out areas.

(3) Forward arming and refueling points (FARPs).

(4) Combat aircraft parking areas and hot cargo parking areas.

(5) Static missile batteries.

(6) Locations used for the teatment or disposal (open burn or detonation) of munitions. Exceptions are those locations used in emergency response and burning excess propellant resulting from munitions use.

b. Documentation requirements. The type of documentation required will be determined by the operational situation and the duration of explosives operations conducted at the site or facility. The following general categories of operations apply:

(1) Contingency and combat training.

(a) Definition. Those operations at permanent or recurrent locations that simulate combat environments using ammunition and explosives to simulate real-world operations to achieve training goals.

(b) Documentation requirement. Facilities or areas for training activities must either a DDESB approved site plan or a risk analysis approved at the appropiate level or both.

(2) *Permanent Facilities.*

(a) Definition. Those facilities where operations are planned for more than 12 months.

(b) Documentation requirement. A DDESB approved site plan (through command channels) must be obtained once it is determined that operations will require the facilities' use to exceed 12 months.

(3) *Recurrent Facilities.*

(a) Definition. Includes facilities for periodic explosives operations such as deployments or other contingency responses. These locations may be planned using compensatory actions, such as facility evacuation or change-of-use, to

minimize the risks involved by exposure to explosives operations. Use of such facilities shall be planned, coordinated, documented and approved before operations commence.

(b) Documentation requirement. These locations must have a DDESB (or appropiate level of command when applicable) approved site plan before commencing operations.

(4) *Temporary.*

(a) Definition. Those facilities for operations that are either not expected to last for protracted periods of time (less than 12 months) or are of such short notice that advance planning and approval are impossible.

(b) Documentation requirement. A plan for the specific scenario shall be approved by the appropriate level of command. The plan shall detail the following:

1. A risk assessment for the proposed operation. This assessemnt will weigh need for the facility against the potential effect of a mishap in terms of mission impact, loss of resources, turnaround times, etc.

2. Milestones for transitioning the function to a 'permanent' type of operation or for the cessation of the explosives operations.

c. Site Plan Packages. Site plan request packages will be submitted through command channels for approval. The site plan package will contain the same elements required in DA Pam 385-64, chapter 8, with the following modifications:

(1) *Maps and drawings.* Maps of a 1-inch equals 400 feet scale or metric equivalent are prefered. If these are not available maps of different scales that show all structures within the inhabited building distance arc will be accepted. If scale maps are not available drawn maps/overhead photographs with measured distances can be used.

(2) *Construction details.* Full construction details are not necessary. General details regarding construction materials, lightning protection, grounding systems, electrical power, heating systems and other hazardous materials will be sufficient.

(3) *Risk analysis.* A copy of the risk analysis performed, if one was performed to demonstrate equivalent protection.

d. Waivers and exemptions.

(1) *General.* Explosives safety waivers and exemptions to the criteria in this chapter will be accomplished IAW chapter 7 of AR 385-64.

(2) *Interservice waivers and exemptions.* Requests for waivers and exemptions that effect only Army personnel/ resources will be handled IAW AR 385-64. When an Army explosives safety waiver or exemption effects the personnel or assets of another service the action must be coordinated with that other service.

14–3. Asset Preservation Distances.

If it is necessary to protect critical warfighting assets use public traffic route (PTR) distances from the ammunition or explosives to the site to be protected. At this distance, assets are expected to be useable following an incident at a nearby potential explosion site. For 1.1 ammunition items use $D=9.5Q^{1/3}/D=12Q^{1/3}$ (K24/K30) and for ammunition classified as 1.2, 1.3 and 1.4 apply the PTR distance required in the appropiate table in chapter 5. Note that Q is used to represent the explosives quantity in kilgrams whereas W is used to indicate weight in pounds.

14–4. Basic load ammunition holding areas

a. Mission requirement. To fulfill their missions, certain units must keep their basic load ammunition in readiness within the immediate vicinity of their barracks (in armored vehicles, trucks, trailers, structures or on pads). These storage areas, known as basic load ammunition holding areas (BLAHAs), are comprised of one or more licensed storage sites and involve acceptance of risks to personnel, facilities, and equipment that are greater than permitted by other chapters of this pamphlet. The concept of BLAHA storage may also be used to provide QD separations during mobile operations. For guidance on field storage of non-basic load ammunition supplies, for example corps or theater stocks, see chapter 15 of this pamphlet.

b. Minimum fragment distance. The minimum fragment distance requirements of chapter 5 shall be applied. Mimimum fragment distances apply to facilities deemed critical to the mission. Housing (both Army personnel and local national) health and morale facilities (except those morale facilities that do not involve construction of buildings such as baseball diamonds, soccer fields, and running tracks or trails) are examples of such locations. For example, an above ground water supply in a desert environment should meet the fragment distance criteria in addition to the QD

criteria contained in this chapter. Where it is not possible to meet minimum fragment distance, engineering solutions such as sandbags and barricades may be used.

c. Mixing of basic load ammunition. Storage compatibility requirements of chapter 4 do not apply to any licensed site in a BLAHA storing 4,000 kg NEQ/8,820 pounds NEW or less of mixed compatibility basic load ammunition.

d. Net explosives quantity (NEQ)/net explosives weight (NEW). Net explosives quantity (NEQ) in kilograms (net explosives weight (NEW) in pounds) for use with BLAHA QD criteria will be determined as follows:

(1) The sum of the weights of all energetic compositions contained in munitions hazard classified as hazard division 1.1 or 1.5 will be used.

(2) The sum of the explosives weight of all hazard division 1.2 munitions will be used. The propellant weight of a hazard division 1.2 item (if present) may be disregarded.

(3) The weights of energetic compositions hazard classified as 1.3 may be omitted. If the site only contains 1.3 items the criteria contained in chapter 5 applies.

(4) The weights of energetic compositions hazard classified as hazard division 1.4 need not be considered for QD computations for BLAHAs.

(5) The explosives weight of hazard division 1.6 will be computed as follows:

(a) When hazard division 1.6 is stored alone or with hazard division 1.4 ammunition items, the QD criteria of chapter 5 applies.

(b) When hazard division 1.6 is stored with ammunition classified as hazard division 1.1, 1.2, or 1.5 add the explosives weight of the 1.6 items into the NEQ calculations.

(c) When hazard division 1.6 is stored with ammunition classified as hazard division 1.3 add the explosives weights of the hazard division 1.3 and hazard division 1.6. The QD criteria of chapter 5 applies.

e. Explosives limits.

(1) The maximum NEQ/NEW at any licensed site in a BLAHA storing mixed compatibility basic load ammunition must not exceed 4,000 kg/8,820 lb. A single BLAHA may have multiple 4,000 kg (8,800 lb) sites, provided the BLAHA sites are separated by the appropriate D1, D2 or D3 distances given in table 14-1.

(2) When the BLAHA or site within a multiple bay BLAHA exceeds 4,000 kg(8,800 lb), the QD computations for that BLAHA site will be per chapter 5 and explosives compatibility storage criteria of chapter 4 applies.

f. Quantity-distance computations (Table 14-1).

(1) The total NEQ/NEW of ammunition in each site shall be used for computation of Q-D provided the required distances necessary to prevent propagation separate these items. If the distances are not met the entire BLAHA shall be considered one site.

(2) The intermagazine separation requirements of chapter 5 apply when using standard (3-bar or 7-bar) earth-covered magazines.

(3) Table 14-1 contains the QD separation for BLAHAs as explained below:

(a) Column D1 is used for:

1. Side-to-side, side-to-rear and rear-to-rear exposures between undefined earth-covered magazines (ECMs), provided the earth cover complies with paragraph 5-8, and the explosives are stored at least one meter (3 feet) from the end of the shelter.

2. Non-armored sites to non-armored sites when an adequate barricade is located between the sites.

3. Light armored vehicles to non-armored ES's when an adequate barricade is near the non-armored ES.

4. Light armor or non-armored PES's to light armored ES's when an adequate barricade is located between the sites.

(b) Column D2 is used for:

1. Front-to-front exposures involving undefined ECMs when there is an adequate barricade at the ES.

2. Non-armored or light armored sites to the side or rear of an undefined ECM.

(c) Column D3 is used for:

1. Non-armored sites to non-armored sites without an adequate barricade.

2. Light armored vehicles to non-armored sites without an adequate barricade at the non-armored site.

3. Undefined ECMs to undefined ECMs when positioned front-to-front and no barricade is present.

4. Non-armored sites, light armored sites or undefined ECMs to the front of undefinded ECMs when no barricade is present at the ES.

(d) Column D4 is used for PTR separations from non-armored and light armored vehicles and sites.

(e) Column D5 is the IBD separation from non-armored and light armored vehicles or sites.

(f) Column D6 is used to determined the IBD and PTR separation from heavy armored vehicles. When NEQ 150 kg (330 lb) the IBD and PTR separation distances specified in chapter 5 apply.

(4) Heavy armored vehicles are expected to largely contain the blast and fragments from an internal explosion and are well protected from an external explosion. For this reason there is no required separation from heavy armor to light

or non-armored sites. Additionally, heavy armor requires no separation from other sites (heavy armor being the ES). The hatches of heavy armored vehicles must be kept closed to consider them as heavy armor.

(5) The QD requirements for heavy, light and non-armored vehicles or sites are contained in table 14-1A.

(6) Use $D=9.5Q^{1/3}/D=12Q^{1/3}$ (K24/30) instead of D1, D2 and D3 for asset preservation.

(7) The total NEQ/NEW of ammunition in all trucks or trailers within a truck or trailer park will be used for Q-D computations if the trucks or trailers within a park occupy one storage site and are not separated from each other by Q-D specified in (2) above.

(8) Intermagazine separation requirements of chapter 5 apply when basic load ammunition is stored in standard magazines. When earth covered shelters of light construction; for example, a MILVAN covered with dirt, are used, the D1 distances in Table 14–1 apply to side-to-side configurations provided the earth cover complies with paragraph 5–8, and the explosives are stored at least 1 meter from the end of the shelter. If end-to-end sitings are involved, the D2 distances apply provided there is a barricade. D3 distances apply if there is no barricade.

(9) The Bradley Fighting Vehicle is expected to contain blast and fragments from its HD 1.2, 25mm ammunition. If a Bradley is uploaded only with 25 mm ammunition it can be considered as "heavy armor."If a Bradley is only uploaded with 25mm ammunition it can be consider as "heavy armor."

(10) Barracks, headquarters, and maintenance facilities within a military installation will be separated from mixed compatibility, basic load ammunition of less than 4,000 kg NEQ/8,820 pounds NEW by D5 distances in Table 14-1.

(11) Detonators and/or blasting caps, when stored with basic load ammunition, will be separated from other types of explosives by a heavy dividing wall. Sandbags, heavy inert material (bomb fins), or small arms ammunition may be used for this purpose. The wall must be stable and provide line-of-sight protection to the other explosives.

14–5. Basic load storage in other than BLAHAs

a. Individual magazines, sheds, pads, or other licensed storage sites within a depot, pre-stock point (PSP) or ASP may be designated as basic load storage sites.

b. Each designated basic load storage site containing mixed compatibility basic load ammunition will not contain prepositioned war reserves (PPWR) ammunition, training ammunition or, other ammunition stock. In overseas areas where storage space is limited, basic load ammunition and training ammunition may be stored together for short periods not to exceed 30 days.

c. Each designated basic load storage site must comply with all provisions of paragraph 14–2.

d. Compatible basic load ammunition may be stored with compatible PPWR in accordance with chapter 5.

14–6. Vehicle and equipment maintenance

a. Maintenance of military vehicles and equipment, when the maintenance work is performed exclusively by and for the military personnel of the unit or units storing ammunition at the BLAHA, must be separated from the PES by IL(U) distance.

b. Crew-level maintenance may be performed on an uploaded vehicle without downloading ammunition. However, ammunition-laden vehicles undergoing authorized minor maintenance must be separated from fire and spark or flame producing devices by at least 50 feet.

c. Ammunition will be removed from vehicles scheduled for repair or maintenance requiring welding or torch cutting, disassembling fuel or electrical systems, or removing power packs.

d. Ammunition must be downloaded before vehicles are delivered to contact teams or shop areas.

e. Ammunition downloaded from vehicles undergoing maintenance or repair must be removed to a licensed ammunition storage area, stored in a licensed ammunition download rack, or loaded in an extra or standby vehicle. Ammunition may not be stored, even temporarily, in a BLAHA unless it meets all the provisions of paragraph 14–2.

f. Ammunition may be downloaded from vehicles in a BLAHA or vehicle park provided the ammunition is immediately removed in accordance with *e* above.

14–7. Fire prevention

a. Vehicles and trailers loaded with explosives should be parked 250 feet or more from vehicles and trailers transporting flammable liquids or cargo vehicles loaded with packaged gasoline, diesel fuel, and similar flammable liquids. Safety clearance may be reduced below 250 feet, but not less than 50 feet, when compliance is not possible because of area constraints.

b. Vehicles and trailers loaded with explosives will not be parked in military facilities where vegetation fires may ignite them. Vehicles and trailers will be parked and maintained in a way allowing rapid evacuation if a fire occurs. (This parking procedure will be followed to the maximum practical extent during field exercises.)

c. A fire plan will be posted for evacuation of combat loaded vehicles in a BLAHA. The fire plan for uploaded armored vehicles will include provisions for a quarterly fire drill for armored vehicle crews.

d. When tactical situations permit, refueling operations for vehicles carrying ammunition should be delayed until the engine has cooled for at least 10 minutes to lessen the danger of automatic ignition from spills or overflows.

14–8. Surveillance

a. Ammunition surveillance inspections of basic load ammunition, will be separated from each PES in accordance with paragraph 13–2j.

b. In the case of uploaded tank parks, where drastically reduced distances separate uploaded tanks from inhabited buildings, no more than three tanks at a time may be downloaded for surveillance inspections. Whenever possible, ammunition should be removed to a licensed storage facility for surveillance operations.

14–9. Storage

Certain static storage provisions of this pamphlet do not apply to the mission-oriented storage of basic load ammunition in BLAHA facilities.

a. Nonpowered MHE may be stored with basic load ammunition if the MHE is used exclusively for the transfer of the ammunition from the structure where it is stored.

b. Separation of ammunition lots is not required for basic load combat configured load (CCL). As one lot of ammunition may exist in several locations within one storage structure, lot will be identified with a placard attached to each load, listing, by Department of Defense identification code (DODIC), all lot numbers and quantities in the load.

c. Fire and chemical hazard symbols are required only on the main gate (and other gates used by fire fighting forces) of a BLAHA if both of the following provisions are met:

(1) All storage sites within the BLAHA are visible from the main gate.

(2) All storage sites within the BLAHA store 4000 kg NEQ/8820 pounds NEW or less mixed compatibility basic load ammunition.

d. Artillery projectiles and associated propelling charge may be stored in a loose, unbanded configuration when the upload procedures do not include using powered or power-assisted material handling equipment. When stored loose, these items must be secured so that they will remain secure and stable. Projectiles should be stored with the original pallet top and base with the cut banding removed.

e. To decrease response times, ammunition to be immediately uploaded during an alert or contingency may be stored in containers that can be easily opened. When consistent with security requirements, banding may be removed and nailed covers loosened to the extent that further use of tools is not required.

f. Dunnage between uncleated boxes of unpalletized basic load ammunition is not required.

14–10. Basic load storage ammunition holding areas in the United States

a. In accordance with paragraph 4–4b, certain U.S. locations, designated by the Army, and site approved by the DDESB, to store ammunition and explosives packages in configuration for rapid response, for example, Rapid Deployment Force, are authorized to mix compatibility groups as required to achieve the optimum load required by the using units. The maximum NEQ/NEW at any of these locations must not exceed 4000 kg/8820 pounds calculated in accordance with paragraph 14–2d.

b. All the provisions of paragraphs 14-2 through 14-9 apply to BLAHA storage in the U.S. except that the Q-D requirements of chapter 5 of this pamphlet apply. Use of the relaxed Q-D provisions of Table 14–1 are not authorized.

14–11. General requirements for training operations

Realistic training with ammunition and explosives in peacetime is an inherently hazardous operation involving constant risk assessment, a greater degree of risk acceptance, and a heightened awareness of explosives safety. (Explosives safety criteria for training operations on firing ranges is contained in AR 385–63.)

14–12. Upload exercises

The live ammunition upload exercise, testing reaction times, load times, and trafficability plans are the most common Army go-to-war exercise performed by forward-deployed troops. These exercises are authorized, without regard to Q-D criteria at upload sites, with the following restrictions:

a. There will be no relaxation in standards governing vehicle safety, fire prevention, ammunition handling safety or transportation safety required by other portions of this pamphlet.

(1) Vehicles must be inspected in accordance with paragraph 7–6*a* before entering the ammunition storage area. Vehicles which do not pass the inspection will not participate further in the upload portion of the exercise unless deficiencies are corrected.

(2) Fire or spark producing devices, including matches and cigarette lighters, will not be permitted in the ammunition storage area. Smoking will not be permitted except in authorized areas. Two hand-held fire extinguishers (para 3–8a) must be present and ready for immediate use at each pad, building, and so forth, when ammunition is handled.

(3) Ammunition must be handled carefully. Containers must not be tumbled, dropped, thrown, or rolled. Only containers designed for dragging may be dragged.

(4) Loaded weapons will not be allowed in storage structures containing ammunition.

(5) During the loading or unloading of vehicles, the parking brakes must be set, the engine turned off, and at least one wheel chocked. Vehicles uploaded with ammunition must have the weight properly distributed and the load

secured to prevent movement. The unit commander must ensure the load is checked and complies with governing transportation requirements before the load is moved. Palletized loads of ammunition on vehicles with load bearing sideboards must not have over one-third the height of the pallet extending above the sides or tailgates, and unpalletized loads must not extend above the sides or tailgates. All vehicles must be uploaded in accordance with the loading and tiedown procedures contained in approved drawings.

b. Exposure of units to their ammunition will be limited to the minimum number of persons, for a minimum amount of time and the minimum amount of ammunition consistent with safe and efficient operations.

(1) Only personnel essential to the uploading or downloading of ammunition will be permitted at the loading site.

(2) Nonessential personnel or those waiting for access to magazines will be kept at the maximum practical distance from the loading site.

(3) Upon completion of the upload portion of the exercise, the unit will immediately download unless:

(a) The uploaded vehicle is blocking the access of another unit or vehicle to its ammunition.

(b) The exercise involves moving the ammunition to a local dispersal area.

(c) Safety considerations, such as darkness or weather conditions, intervene.

c. Local dispersal areas, or other collection points for uploaded vehicles, will meet the Q-D requirements of chapter 5.

d. Uploaded vehicles awaiting download will be directed to locations within the installation which do not compromise external Q-D restrictions and which present the least internal hazard.

(1) Where space on the installation permits, uploaded vehicles will be parked a minimum of 10 meters from other uploaded vehicles to facilitate isolating a burning vehicle.

(2) Where space on an installation does not permit 10 meters separation between uploaded vehicles, collection points may be established. These collection points will be treated as aboveground magazines provided the NEQ/NEW does not exceed 4000 kg/8820 pounds as computed in paragraph 14–2*d*. If these weights are exceeded, the collection point will be treated as a holding yard and sited in accordance with chapter 5.

(3) Under no circumstances should vehicles be forced off a storage site or installation onto public roads for the sole purpose of meeting Q-D restrictions.

14–13. Combat configured loads

a. CCLs are authorized to use "Z" compatibility (fig 4–1) and are an exception to lot separation requirements in accordance with paragraph 14–7*b*.

b. Sites for exercises designed to practice the construction of CCLs will be separated from each storage PES by at least IL(U) distance.

c. Exercises designed to practice the upload of ammunition before the assembly and construction of CCLs will be conducted in accordance with paragraph 14–10.

14–14. Aviation operations at BLAHAs

a. Helicopter landing areas for loading and unloading ammunition within storage sites and quick reaction alert sites will be considered aboveground magazines and may be sited at appropriate Q-Ds based only upon explosives on board the helicopters. Intermagazine distances will apply to magazines and maintenance buildings subject to the following requirements:

(1) Flight clearance criteria are met.

(2) Landing and take-off approaches will not be over magazines.

(3) Helicopter operations will be limited to ammunition support of the magazines concerned. Carrying passengers is not permitted. Troops and ammunition may be transported by the same helicopter when—

(a) The soldiers are members of a weapon crew.

(b) The helicopter is servicing their weapons.

(4) Safety precautions normal to other modes of transportation are to be observed.

(a) Explosives operations will not be conducted in magazines or maintenance buildings located within IBD from the helicopter landing area during take-off, landing or loading/off-loading of the helicopters. These magazines and buildings will be closed.

(b) Ammunition upload exercises involving ground vehicles will not take place during helicopter upload exercises unless the two exercises are separated by at least IL(U) distance.

b. During sling-load exercises, dummy loads should be constructed to simulate the size, weight, and shape of the ammunition. If live ammunition is used, all of the provisions of a above must be followed.

14–15. Forward area rearm/refuel points (FARP)

a. FARPs will be separated by at least IBD from all inhabited sites. In the United States, its territories, and

possessions this distance will be computed in accordance with chapter 5. In locations outside the United States where use of paragraphs 14-2 through 14-7 is authorized, D5 distances of Table 14–1 apply.

b. Ammunition placement sites will be a prudent fire distance away from fuel storage sites, but in no case less than 100 feet. Fuel supplies shall be diked or placed downhill from the ammunition and explosives.

c. Armament pads will contain the minimum amount of munitions to conduct efficient operations. In no case will the amount of munitions exceed the amount required to arm the maximum number of helicopters that can be refueled at one time. The ready ammunition storage (that ammunition staged to support the next load) shall be separated by aboveground magazine distance from the armament pads, with only the armament pads considered as the PES. Ready ammunition storage structures shall be separated from other ready ammunition storage structures by aboveground magazine. Build-up locations shall be separated by aboveground magazine distance from all other explosives storage locations and operations with only the build-up location considered as the PES.

d. Ammunition brought to the helicopter for rearming will not be placed on a fuel spill. Ammunition should be kept at least 100 feet away from waste fuel pans.

e. Rearming will not begin until the aircrew has signaled that all weapons systems have been safed and the aircraft engine has been reduced to flight idle. Rearming will begin with the turret weapon system and the wing stores opposite the fueling port during the refueling operations.

f. When loading electrically initiated missiles or rockets, stray voltage must be eliminated before loading. The aircraft will be grounded during rearming.

g. Ammunition loading crew members splashed with fuel must immediately leave the load area.

h. Excess and empty packaging material must be kept clear of the refueling point.

14–16. Airfield Operations

a. General.

(1) Special consideration must be given to phased plans where the peacetime operation and positioning of aircraft transitions to contingency operations with increased quantities and use of explosives. Exposures given adequate protection under the peacetime phase may be placed at greater levels of risk during the contingency phase. Commanders must consider these changes when approving these plans.

(2) The proper use of such features as barricades or earth-filled, steel-bin-type barricades (ARMCO Revetment or equivalent) can decrease the size of a potential explosive event and increase the explosives capacity of limited areas.

b. Airfield Q-D criteria.

(1) *Potential Explosives Site criteria.* Table 14-4 provides criteria for airfield PESs.

(2) *Exposed Site criteria.*

(a) Runways, taxiways and combat cargo aircraft. For military use runways and taxiways use table 14-4. For joint use runways and taxiways, use criteria in Chapter 5.

(b) Combat aircraft support facilities. Unhardened combat aircraft support facilities shall be separated from munitions storage and operating facilities by $D=12Q^{1/3}$ (K30). For asset preservation, apply incremental $D=16Q^{1/3}$ to $20Q^{1/3}$ (K40 to K50) based on the NEW. If these functions are located in a HAS, separation can be reduced to $D=7.1Q^{1/3}$ (K18) to the sides or rear. Site other hardened facilities as approved by the DDESB. Combat aircraft support facilities may be sited at intraline distances under reduced criteria when the additional risk to personnel and resources is accepted.

c. Hardened Aircraft Shelters (HAS).

(1) As a minimum, HAS and associated storage facilities shall be separated one from another according to Table 14-2. At these distances there will be a high degree of protection against propagation of explosion when HAS doors are properly secured. However the exposed shelter may be heavily damaged and aircraft and ammunition therein may be redered unserviceable.

(2) HAS and associated storage facilities spaced according to Table 14-3 will provide a higher degree of asset preservation than those provided in table 14-2. An explosion in one shelter or ready storage facility may destroy it and its contents, but aircraft within adjacent shelters will be undamaged provided the doors are closed. These aircraft may not be immediately removable due to debris.

(3) Areas of hazard to front, side, or rear of HAS or ECMs as PES, or ESs lie in the arcs shown in Figure 14-1. A particular face of an ES is threatened by a PES face when both of these faces lie within the arc of threat or hazard of the other.

(4) When the PES is a third-generation HAS containing up to 5,000 kg (11,000 lb) NEQ (NEW) minimum distances from the front, sides and rear given in Table 14-3a shall be used to protect an unhardened ES against debris and blast. The quanity distance criteria given in Table 14-3a apply to all hazard division 1.1 ammunition and explosives regardless of any minimum fragment distance denoted by (xx)1.1.

(5) When operational necessity dictates, distances less than those contained in tables 14-2 and 14-3 may be approved for ESs. However, it must be shown that protection equivalent to K18 is being provided.

d. Aircraft that contain only installed explosives and safety devices such as authorized signals in survival kits, egress

systems components, engine-starter cartridges, fire extinguisher cartridges and other such items (chap 5) necessary to flight operations are not regarded as PESs under the provisions of this chapter.

14–17. Ports

a. General. The following criteria shall apply to ports where ammunition and explosives are loaded/unloaded in a contingency or deployment situation. Normal ammunition shipments will use the port criteria contained in Chapter 5.

b. Required separations.

(1) Explosives piers.

(a) Aboveground intermagazine (D= $4.4Q^{1/3}$, K11) distance shall be maintained between explosives piers.

(b) Intraline distance (D= $7.1Q^{1/3}$, K18) shall be maintained from an explosives pier to a non-explosives pier used for the handling of military cargo.

(c) Above ground intermagazine distance (D= $4.4Q^{1/3}$, K11) shall be maintained to Ammunition and Explosives Holding Areas (A&E HA), based on the NEW present at the pier.

(d) Marshalling Yards shall be located at PTR distance from explosives piers.

(e) Railheads used for long-term storage or as a transfer depot shall be sited at aboveground intermagazine (D= $4.4Q^{1/3}$, K11) distance from an explosives pier, based on the NEW at the pier.

(2) *Explosives anchorages.* The criteria of Chapter 5 apply to the use of explosives anchorages, with the following exceptions:

(a) Intraline (D= $7.1Q^{1/3}$, K18) distance shall be provided between the explosives loading or unloading section and the loaded ship section of an explosives anchorage.

(b) An explosives anchorage should be located at D= 16Q1/3 (K40) distance from all piers. However, where necessary for security or navigational reasons, this distance can be reduced to intraline distance (D= $7.1Q^{1/3}$, K18) when the piers are utilized for only DoD operations. PTR distance shall apply for asset preservation. A separation distance of D= $16Q^{1/3}$ (K40) shall be maintained to all non-DoD related piers.

(c) Intraline distance (D= $7.1Q^{1/3}$, K18) is permitted between an explosives anchorage and a non-explosives DoD related anchorage. A separation distance of D= $16Q^{1/3}$ (K40) shall be maintained between an explosives anchorage and a non-explosives, non-DoD related anchorage.

(3) *Explosives facilities.*

(a) A&E Holding Areas (HAs). These holding areas are used in support of A&E on-loading and off-loading of ships. Typically, A&E being held at these locations are present for short term holding only. The NEW associated with the A&E HA is based on all A&E present at the site. The following apply to A&E HA:

1. Intraline distance (D= $7.1Q^{1/3}$, K18) shall be maintained to both explosives and non-explosives piers, based on the NEW present at the A&E HA.

2. PTR distance shall be maintained to a Marshalling Yard, either explosives or non-explosives.

3. Railheads used for A&E HA storage or as a transfer depot shall be sited at aboveground intermagazine distance (D=4.4Q1/3, K11) from an A&E HA, based on the NEW at the A&E HA.

(b) Marshalling yards. Marshalling Yards are areas where a unit or organization can account for or assemble their equipment and prepare for onward movement. A Marshalling Yard may not always be associated with a port operation. Since the Marshalling Yard must be located at PTR distance from an explosives pier and an A&E HA, the location of the Marshalling Yard will typically be governed by the NEWs at these other potential explosion sites. In the event this is not the case, the Marshalling Yard shall be separated by intraline distance (D=$7.1Q^{1/3}$, K18) to nearby manned explosives operations and aboveground intermagazine distance (D=$4.4Q^{1/3}$, K11) to nearby unmanned explosives storage operations.

(c) Railheads. Railheads shall be sited on the basis of use, e.g., classification yard, holding area or loading dock.

(d) Loading docks. Loading docks shall be sited at intermagazine distance (D=$4.4Q^{1/3}$, K11) from all ESs.

(e) Classification yards. Use criteria provided in Chapter 5.

14–18. Static missile battery separation

To ensure optimal effectiveness offensive and defense missle batteries must often be deployed in the proximity of other explosives operations such as field storage or flightlines in a static (non-mobile role). The following criteria apply to deployed static missile batteries (e.g., Patriots, Hawks and Rolands) and associated support functions.

a. Intermagazine separation of D=$4.4Q^{1/3}$(K11) shall be maintained between missiel launchers, reloads and other munitions storage locations to include parked explosives loaded aircraft.

b. Missile batteries deployed within the IBD clear zone of munitions storage areas may be sited at D=$7.1Q^{1/3}$ (K18) to manned functions considered related to area explosives operations. Likewise, missle batteries deployed in the clear zone of flightline operations may be sited at D=$7.1Q^{1/3}$ (K18) to manned flightline facilities.

c. Those functions soley providing support to static missile units, such as motor pools, may be sited at D=$7.1Q^{1/3}$

(K18) to batteries and other explosives activities when the missile battery is located in those areas. For asset preservation, use PTR distance.

d. No separation is required between missile batteries and the security forces structures exclusive supporting them.

14–19. Separation from fuel

a. Bulk fuel storage (More than 18,900 liters (5,000 gallons)). Apply distances as required in chapter 5.

b. Operational storage (1,900 to 18,900 liters (501 to 5,000 gallons)). Ammunition and explosives shall be separated from operational fuel storage by at least 30 meters (100 ft). Fuel should be located downhill and diked to contain a possible fuel spill.

c. Tactical Storage (1,890 liters (500 gallons) or less). Tactical fuel supplies shall be separated from ammunition and explosives by at least 15 meters (50 feet). Fuel should be located downhill and diked to contain a possible fuel spill.

Table 14–1
Quantity-distance table for basic load ammunition holding areas

NEQ(NEW) kg(lbs)	D-1 m(ft)	D-2 m(ft)	D-3 (m(ft)	D-4 (m(ft)	D-5 (m(ft)	D-6 (m(ft)
5(11)	2(7)	5(17)	9(30)	180(591)	270(886)	20(66)
10(22)	2(7)	6(20)	11(43)	180(591)	270(886)	20(66)
20(44)	3(10)	7(23)	14(46)	180(591)	270(886)	20(66)
30(66)	3(10)	8(27)	15(49)	180(591)	270(886)	20(66)
40(88)	3(10)	9(30)	17(56)	180(591)	270(886)	20(66)
50(110)	3(10)	9(30)	18(59)	180(591)	270(886)	20(66)
60(132)	4(13)	10(33)	19(62)	180(591)	270(886)	26(85)
75(165)	4(13)	10(33)	21(69)	180(591)	270(886)	26(85)
100(220)	4(13)	12(40)	23(75)	180(591)	270(886)	32(105)
125(275)	4(13)	12(40)	24(79)	180(591)	270(886)	38(125)
150(330)	5(16)	13(43)	26(85)	180(591)	270(886)	42(138)
175(385)	5(16)	14(46)	27(89)	180(591)	270(886)	
200(440)	5(16)	14(46)	29(95)	180(591)	270(886)	
250(550)	6(20)	15(50)	31(102)	180(591)	270(886)	
300(660)	6(20)	16(53)	33(108)	180(591)	270(886)	
350(770)	6(20)	17(56)	34(112)	180(591)	270(886)	
400(880)	6(20)	18(60)	36(118)	180(591)	270(886)	
450(990)	7(23)	19(63)	37(121)	180(591)	270(886)	
500(1,100)	7(23)	19(63)	39(128)	180(591)	270(886)	
600(1,320)	7(23)	20(66)	41(135)	180(591)	270(886)	
700(1,540)	8(26)	22(73)	43(141)	180(591)	270(886)	
800(1,760)	8(26)	23(76)	45(148)	180(591)	270(886)	
900(1,980)	8(26)	23(76)	47(154)	180(591)	270(886)	
1,000(2,200)	8(26)	24(79)	48(157)	180(591)	270(886)	
1,200(2,640)	9(30)	26(86)	52(171)	180(591)	270(886)	
1,500(3,300)	10(33)	28(92)	55(180)	180(591)	270(886)	
1,750(3,850)	10(33)	29(96)	58(190)	180(591)	270(886)	
2,000(4,400)	11(36)	30(99)	61(200)	180(591)	270(886)	
2,500(5,500)	11(36)	33(109)	66(217)	180(591)	270(886)	
3,000(6,600)	12(39)	35(115)	70(230)	200(656)	305(1,001)	
3,500(7,700)	13(43)	36(119)	73(240)	215(705)	330(1,083)	
4,000(8,800)	13(43)	38(125)	77(253)	230(755)	350(1,148)	
Distance functions, m	D1= $0.8Q^{1/3}$	D2= $2.4Q^{1/3}$	D3= $4.8Q^{1/3}$	D4= $3.6Q^{1/3}$	D5= $5.5Q^{1/3}$	
Distance functions, ft	K2	K6	K12	$D4=8W^{1/3}$	K12	

Table 14–1A
Quantity-distance for armored vehicles

FROM PES	TO ES HEAVY	LIGHT	NON-ARMORED	PTR	IBD
HEAVY	N/R	N/R	N/R	D6	D6
LIGHT	N/R	D1	D3	D4	D5
NON-ARMORED	N/R	D1	D3	D4	D5

Notes:
N/R = Not required

Table 14–2
Minimum Quantity-Distance for hardened aircraft shelters (HAS) for propagation prevention

TO ES		FROM PES											
		1ST GENERATION HAS			2ND AND 3RD GENERATION HAS			READY SERVICE ECM				READY SERVICE ABOVE GROUND MAGAZINE	
		S	R	F	S	R	F	S	R	FB	FU	B	U
1ST GENERATION HAS	S	K2 $.08Q^{1/3}$	K2 $.08Q^{1/3}$	K2.75 $1.1Q^{1/3}$	K2 $.08Q^{1/3}$	K2 $.08Q^{1/3}$	K2.75 $1.1Q^{1/3}$	K1.25(1) $.05Q^{1/3}$	K1.25(1) $.05Q^{1/3}$	K2.75(2) $1.1Q^{1/3}$	K2.75(2) $1.1Q^{1/3}$	K2.75 $1.1Q^{1/3}$	K11 $4.4Q^{1/3}$
	R	K2 $.08Q^{1/3}$	K2 $.08Q^{1/3}$	K2.75 $1.1Q^{1/3}$	K2 $.08Q^{1/3}$	K2 $.08Q^{1/3}$	K2.75 $1.1Q^{1/3}$	K1.25(1) $.05Q^{1/3}$	K1.25(1) $.05Q^{1/3}$	K2.75(2) $1.1Q^{1/3}$	K2.75(2) $1.1Q^{1/3}$	K2.75 $1.1Q^{1/3}$	K11 $4.4Q^{1/3}$
	F	K6 $2.4Q^{1/3}$	K4.5 $1.8Q^{1/3}$	K8 $3.2Q^{1/3}$	K6 $2.4Q^{1/3}$	K4.5 $1.8Q^{1/3}$	K9 $3.6Q^{1/3}$	K1.25(1) $.05Q^{1/3}$	K2.75(2) $1.1Q^{1/3}$	K6(2) $2.4Q^{1/3}$	K9(2) $3.6Q^{1/3}$	K6 $2.4Q^{1/3}$	K11 $4.4Q^{1/3}$
2ND AND 3RD GENERATION HAS	S	K2 $.08Q^{1/3}$	K2 $.08Q^{1/3}$	K2.75 $1.1Q^{1/3}$	K2 $.08Q^{1/3}$	K2 $.08Q^{1/3}$	K2.75 $1.1Q^{1/3}$	K1.25(1) $.05Q^{1/3}$	K1.25(1) $.05Q^{1/3}$	K2.75(2) $1.1Q^{1/3}$	K2.75(2) $1.1Q^{1/3}$	K2.75 $1.1Q^{1/3}$	K11 $4.4Q^{1/3}$
	R	K2 $.08Q^{1/3}$	K2 $.08Q^{1/3}$	K2.75 $1.1Q^{1/3}$	K2 $.08Q^{1/3}$	K2 $.08Q^{1/3}$	K2.75 $1.1Q^{1/3}$	K1.25(1) $.05Q^{1/3}$	K1.25(1) $.05Q^{1/3}$	K2.75(2) $1.1Q^{1/3}$	K2.75(2) $1.1Q^{1/3}$	K2.75 $1.1Q^{1/3}$	K2.75 $1.1Q^{1/3}$
	F	K4.5 $1.8Q^{1/3}$	K2.75 $1.1Q^{1/3}$	K5 $2.0Q^{1/3}$	K4.5 $1.8Q^{1/3}$	K2.75 $1.1Q^{1/3}$	K6 $2.4Q^{1/3}$	K1.25(1) $.05Q^{1/3}$	K1.25(1) $.05Q^{1/3}$	K2.75(2) $1.1Q^{1/3}$	K2.75(2) $1.1Q^{1/3}$	K6 $2.4Q^{1/3}$	K11 $4.4Q^{1/3}$
READY SERV ECM	S	K2 $.08Q^{1/3}$	K2 $.08Q^{1/3}$	K2.75 $1.1Q^{1/3}$	K2 $.08Q^{1/3}$	K2 $.08Q^{1/3}$	K2.75 $1.1Q^{1/3}$						
	R	K2 $.08Q^{1/3}$	K2 $.08Q^{1/3}$	K2.75 $1.1Q^{1/3}$	K2 $.08Q$	K2 $.08Q^{1/3}$	K2.75 $1.1Q^{1/3}$						
	FB	K2.75 $1.1Q^{1/3}$	K2.75 $1.1Q^{1/3}$	K5 $2.0Q^{1/3}$	K2.75 $1.1Q^{1/3}$	K2.75 $1.1Q^{1/3}$	K6 $2.4Q^{1/3}$						
	FU	K6 $2.4Q^{1/3}$	K4.5 $1.8Q^{1/3}$	K8 $3.2Q^{1/3}$	K6 $2.4Q^{1/3}$	K4.5 $1.8Q^{1/3}$	K9 $3.6Q^{1/3}$						
READY SERVICE ABOVE GROUND MAGAZINE	B	K2.75 $1.1Q^{1/3}$	K2.75 $1.1Q^{1/3}$	K6 $2.4Q^{1/3}$	K2.75 $1.1Q^{1/3}$	K2.75 $1.1Q^{1/3}$	K6 $2.4Q^{1/3}$						
	U	K11 $4.4Q^{1/3}$	K11 $4.4Q^{1/3}$	K11 $4.4Q^{1/3}$	K11 $4.4Q^{1/3}$	K11 $4.4Q^{1/3}$	K11 $4.4Q^{1/3}$						

Notes:
Legend: S-side; R-rear; F-front; B-barricaded; U-unbarricaded
[1] Use $D=0.8Q^{1/3}$ (K2) if the loading density of the ECM exceeds 20 kg per cubic meter (1.25 lbs) NEW per cubic foot of interior volume. Do not exceed the maximum NEW limit of 10,000 kgs (22,000 lbs).
[2] If required, use the separation shown regardless of loading density. Do not exceed the maximum NEW limit of 10,000 kgs (22,000 lbs). Second and third generation HAS's are limited to a minimum of 5,00Kg (11,000 lbs) per shelter.

Table 14–3
Minimum Quantity Distance for Hardened Aircraft Shelters for Asset Preservation

TO ES		FROM PES											
		1ST GENERATION HAS			2ND AND 3RD GENERATION HAS			READY SERVICE ECM				READY SERVICE ABOVE GROUND MAGAZINE	
		S	R	F	S	R	F	S	R	FB	FU	B	U
1ST GENERATION HAS	S	K9 $3.6Q^{1/3}$	K6 $2.4Q^{1/3}$	K9 $3.6Q^{1/3}$	K9 $3.6Q^{1/3}$	K6 $2.4Q^{1/3}$	K9 $3.6Q^{1/3}$	K2.75 $1.1Q^{1/3}$	K2.75 $1.1Q^{1/3}$	K8 $3.2Q^{1/3}$	K8 $3.2Q^{1/3}$	K8 $3.2Q^{1/3}$	K8 $3.2Q^{1/3}$
	R	K8 $3.2Q^{1/3}$	K5 $2.0Q^{1/3}$	K8 $3.2Q^{1/3}$	K8 $3.2Q^{1/3}$	K5 $2.0Q^{1/3}$	K8 $3.2Q^{1/3}$	K2.75 $1.1Q^{1/3}$	K2.75 $1.1Q^{1/3}$	K8 $3.2Q^{1/3}$	K8 $3.2Q^{1/3}$	K8 $3.2Q^{1/3}$	K8 $3.2Q^{1/3}$
	F	K18 $7.1Q^{1/3}$	K18 $7.1Q^{1/3}$	K18 $7.1Q^{1/3}$	K18 $7.1Q^{1/3}$	K18 $7.1Q^{1/3}$	K18 $7.1Q^{1/3}$	K11 $4.4Q^{1/3}$	K9 $3.6Q^{1/3}$	K18 $7.1Q^{1/3}$	K18 $7.1Q^{1/3}$	K6 $2.4Q^{1/3}$	K11 $4.4Q^{1/3}$
2ND AND 3RD GENERATION HAS	S	K9 $3.6Q^{1/3}$	K6 $2.4Q^{1/3}$	K9 $3.6Q^{1/3}$	K9 $3.6Q^{1/3}$	K6 $2.4Q^{1/3}$	K9 $3.6Q^{1/3}$	K2.75 $1.1Q^{1/3}$	K2.75 $1.1Q^{1/3}$	K8 $3.2Q^{1/3}$	K8 $3.2Q^{1/3}$	K8 $3.2Q^{1/3}$	K8 $3.2Q^{1/3}$
	R	K8 $3.2Q^{1/3}$	K5 $2.06^{1/3}$	K8 $3.2Q^{1/3}$	K8 $3.2Q^{1/3}$	K5 $2.06^{1/3}$	K8 $3.2Q^{1/3}$	K2.75 $1.1Q^{1/3}$	K2.75 $1.1Q^{1/3}$	K8 $3.2Q^{1/3}$	K8 $3.2Q^{1/3}$	K8 $3.2Q^{1/3}$	K8 $3.2Q^{1/3}$
	F	K11 $4.4Q^{1/3}$	K9 $3.6Q^{1/3}$	K18 $3.2Q^{1/3}$	K11 $4.4Q^{1/3}$	K9 $3.6Q^{1/3}$	K18 $3.2Q^{1/3}$	K2.75 $1.1Q^{1/3}$	K2.75 $1.1Q^{1/3}$	K8 $3.2Q^{1/3}$	K8 $3.2Q^{1/3}$	K8 $3.2Q^{1/3}$	K8 $3.2Q^{1/3}$
1ST GENERATION MAINTENANCE HAS (SEE NOTE)	S	K9 $3.6Q^{1/3}$	K8 $3.2Q^{1/3}$	K9 $3.6Q^{1/3}$	K9 $3.6Q^{1/3}$	K8 $3.2Q^{1/3}$	K9 $3.6Q^{1/3}$	K8 $3.2Q^{1/3}$	K8 $3.2Q^{1/3}$	K8 $3.2Q^{1/3}$	K8 $3.2Q^{1/3}$	K8 $3.2Q^{1/3}$	K8 $3.2Q^{1/3}$
	R	K8 $3.2Q^{1/3}$	K8 $3.2Q^{1/3}$	K8 $3.2Q^{1/3}$	K8 $3.2Q^{1/3}$	K8 $3.2Q^{1/3}$	K8 $3.2Q^{1/3}$	K8 $3.2Q^{1/3}$	K8 $3.2Q^{1/3}$	K8 $3.2Q^{1/3}$	K8 $3.2Q^{1/3}$	K8 $3.2Q^{1/3}$	K8 $3.2Q^{1/3}$
	F	K18 $3.2Q^{1/3}$	K18 $3.2Q^{1/3}$	K18 $3.2Q^{1/3}$	K18 $3.2Q^{1/3}$	K18 $3.2Q^{1/3}$	K18 $3.2Q^{1/3}$	K11 $4.4Q^{1/3}$	K9 $3.6Q^{1/3}$	K18 $3.2Q^{1/3}$	K18 $3.2Q^{1/3}$	K18 $3.2Q^{1/3}$	K18 $3.2Q^{1/3}$
2ND AND 3RD GENERATION MAINTENANCE HAS (SEE NOTE)	S	K9 $3.6Q^{1/3}$	K8 $3.2Q^{1/3}$	K9 $3.6Q^{1/3}$	K9 $3.6Q^{1/3}$	K8 $3.2Q^{1/3}$	K9 $3.6Q^{1/3}$	K8 $3.2Q^{1/3}$	K8 $3.2Q^{1/3}$	K8 $3.2Q^{1/3}$	K8 $3.2Q^{1/3}$	K8 $3.2Q^{1/3}$	K8 $3.2Q^{1/3}$
	R	K8 $3.2Q^{1/3}$	K8 $3.2Q^{1/3}$	K8 $3.2Q^{1/3}$	K8 $3.2Q^{1/3}$	K8 $3.2Q^{1/3}$	K8 $3.2Q^{1/3}$	K8 $3.2Q^{1/3}$	K8 $3.2Q^{1/3}$	K8 $3.2Q^{1/3}$	K8 $3.2Q^{1/3}$	K8 $3.2Q^{1/3}$	K8 $3.2Q^{1/3}$
	F	K11 $4.4Q^{1/3}$	K9 $3.6Q^{1/3}$	K18 $3.2Q^{1/3}$	K11 $4.4Q^{1/3}$	K9 $3.6Q^{1/3}$	K18 $3.2Q^{1/3}$	K8 $3.2Q^{1/3}$	K8 $3.2Q^{1/3}$	K8 $3.2Q^{1/3}$	K8 $3.2Q^{1/3}$	K8 $3.2Q^{1/3}$	K8 $3.2Q^{1/3}$

Notes:
Legend: S-side; R-rear; F-front; B-barricaded; U-unbarricaded
[1] Maintenance HAS cannot be located closer than 300 feet (984 meters) from any PES HAS sited for more than 500 lbs (225 kgs) NEW.
[2] Second and Third generation HAS's are limited to a maximum of 5,000 kgs (11,000 lbs) per shelter.
[3] Ready service ECM storage is used to support daily loading and is limited to 22,000 lbs (10,000 kgs) per magazine and loading density not more than 1.25 lbs NEW per cubic foot
(20 kg per cubic meter).

Table 14–3A
Quantity-distance from a U.S. third-generation hardened aircraft shelter PES to an unhardened exposed site[1,2]

NEQ, kg (NEW, lb)		Note	Front, m (ft)	Sides, m (ft)	Rear, m (ft)
from	to				
0	2 (4.4)	[3]	15 (50)	15 (50)	15 (50)
2 (4.4)	50 (110)	[3]	70 (230)	15 (50)	15 (50)
50 (110)	225 (500)	[3]	70 (230)	15 (50)	15 (50)
225 (500)	500 (1,100)	[3]	70 (230)	120 (394)	50 (50)
500 (1,100)	5,000 (11,000)	[4]	$20Q^{1/3}$ [K50]	$25Q^{1/3}$ [K63]	$16Q^{1/3}$ [K40]

Notes:

[1] Separations are based on shelter doors remaining closed, except for aircraft towing, fueling, servicing, runup, or taxi and during integrated combat turnarounds or short periods when maintenance equipment or munitions are being moved into or out of the shelter. Where doors are left open for extended periods, normal combat aircraft parking area criteria apply.

[2] Munitions should be separated from the hardened aircraft shelter walls at a distance sufficient to eliminate local breaching. For less than 500 kg, (1100 lb) a one meter (three foot) separation from the wall is sufficient.

[3] The quantity-distance criteria in the table apply to inhabited building distance, public traffic route, and intraline exposures for quantities less than or equal to 500 kg.

[4] For quantities greater than 500 to 5,000 kg (1100 to 11,000 lb), the quantity-distance criteria in the table only apply to inhabited building distance exposures. Use 50% of the inhabited building distance criteria for public traffic route exposures with a 91 meter (300 foot) minimum distance (out the front or rear) or a 120 meter (400 foot) minimum distance (off the sides). Use 35% of the inhabited building distance criteria for intraline exposures with a 91 meter (300 foot) minimum distance (out the front and rear) or a 120 meter (400 foot) minimum distance (off the sides).

Table 14–4
Quantity-distance for assets preservation at airfields

From Airfield PESs To	Minimum Separation Distance	Asset Preservation Distance
Manned functions not related to the combat mission	IBD	IBD
Base boundaries without an easement unless manifestly unsuitable	IBD	IBD
Crew support and billeting areas	IBD	IBD
Central airfield support facilities	IL	Note
Functions directly related to the explosives mission (manned)	IL	Note
Flightline fire and rescue services	IL	Note
Manned munitions operating locations (assembly, maintenance, refurbishment, etc)	IM	Note
Any other explosivcs loaded aircraft or CAPA	IM	Note
Flightline Munitions Holding Area	IM	Note
Military use runways and taxiways	$D=1.8Q^{1/3}/K4.5$	Note

Note: For HD 1.1 material apply D=9.5Q1/3 / $12Q^{1/3}$ (K24 / K30) separation. For HD1.2, 1.3, or 1.4 use PTR distances from the appropriate Chapter 9 tables.

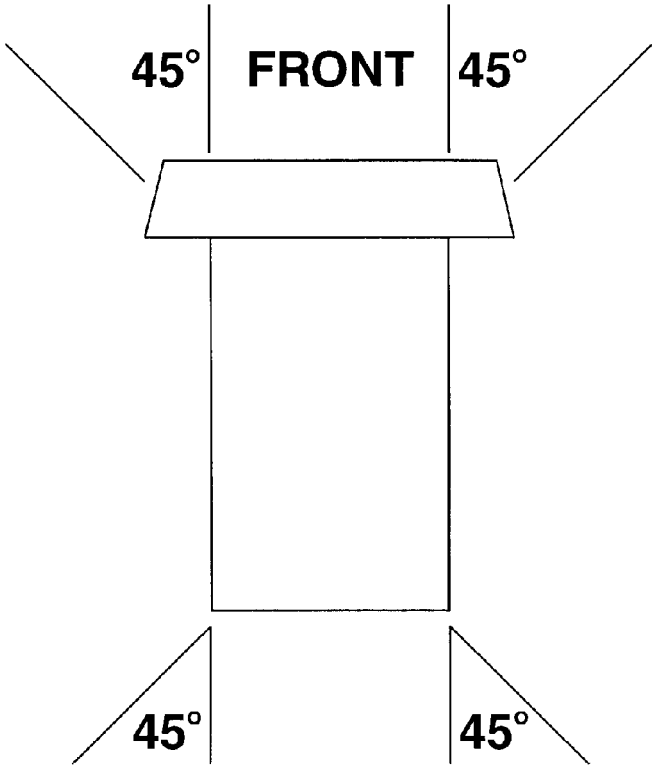

HAS as exposed site

Figure 14-1. Hardened aircraft shelter an as exposed site

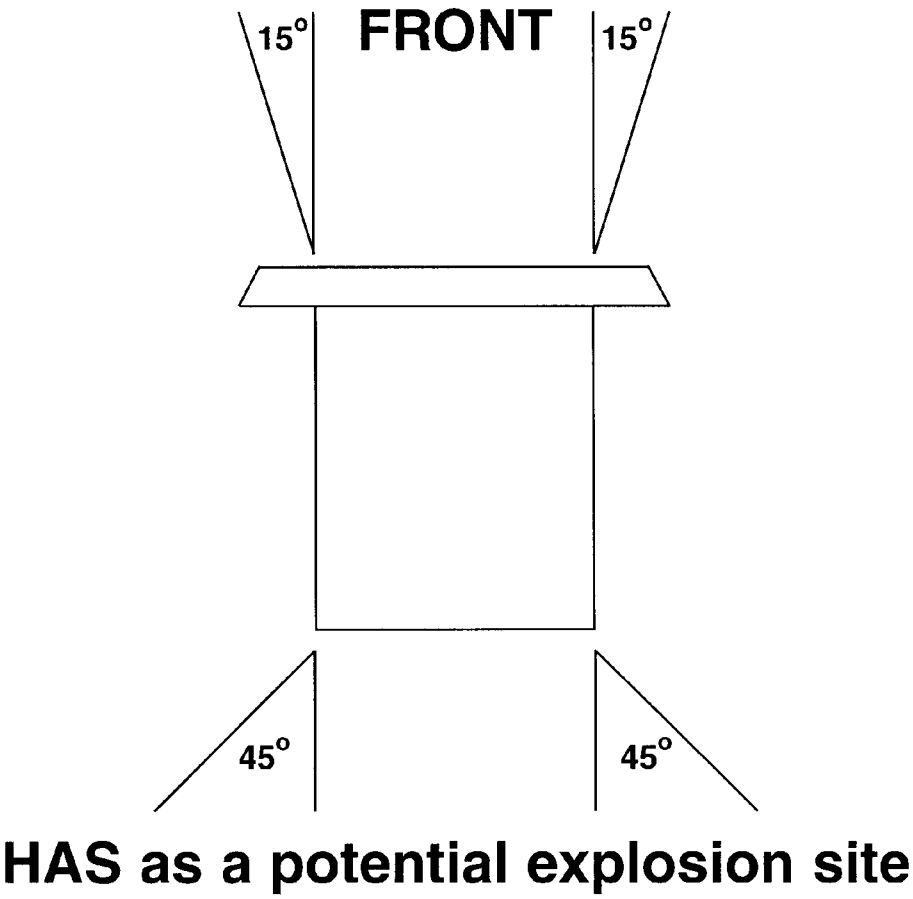

Figure 14-2. Hardened aircraft shelter as a PES

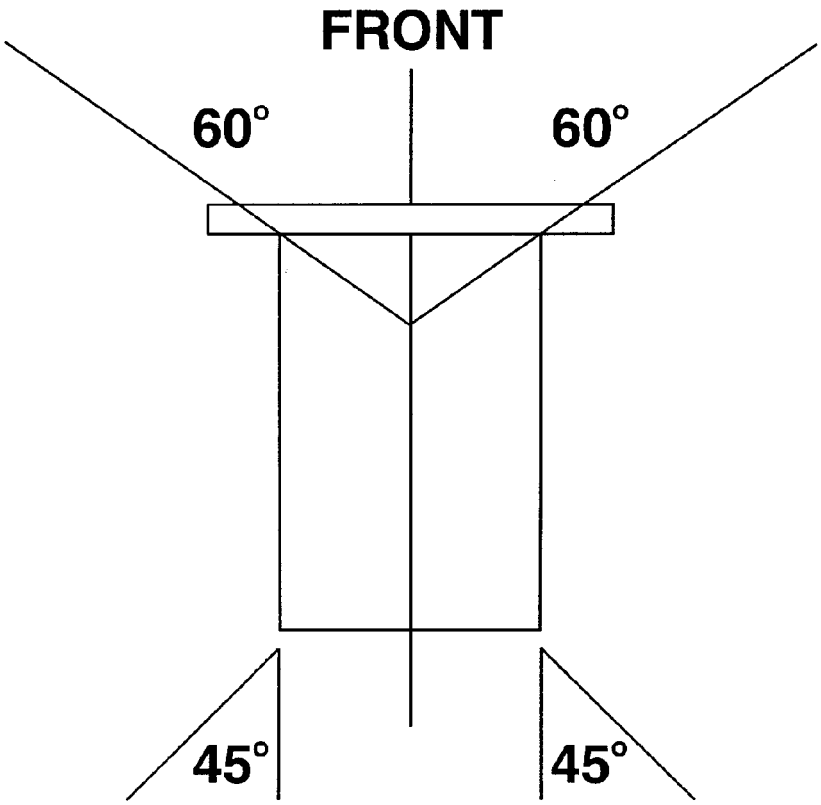

Igloo as ES or PES

Figure 14-3. Igloo Q-D angles

Chapter 15
Wartime Operations

15–1. General requirements

a. This chapter provides guidance for the safe handling, transportation, and storage of ammunition during wartime and contingency operations. This guidance provides options, based on the acceptance of ever increasing degrees of risk, to the commander faced with various and fluctuating battlefield hazards. It may be used in developing battle doctrine and integrated into contingency and combat operations planning.

b. The provisions of this chapter apply in:

(1) A recognized war zone.

(2) A recognized contingency operations area.

(3) An area where hostilities are imminent and approval to implement this chapter has been given by the MACOM.

c. Several fundamental concepts govern the relaxation of peacetime explosives safety standards during combat and contingency operations and the acceptance of added risks:

(1) Whenever and wherever possible, the peacetime explosives safety standards enumerated in chapters 1 though 14

of this pamphlet should be followed. Only after assessing the risks of relaxation against the mission-imposed parameters should the less restrictive guidance of this chapter be implemented. This Chapter provides operational flexibility not available in other parts of this pamphlet. The use of asset preservation criteria contained in this chapter is intended to maintain mission capability; however, these reduced levels of protection may impair or delay mission capability in the event of an explosives accident. This chapter's explosives safety quantity distance (QD) standards include the following two levels of protection:

(a) Asset preservation distance. The distance that prevents propagation or reaction between potential explosion sites (PESs). (Assets at the exposed site [ES] are expected to be usable following an incident.)

(b) Minimum separation distance. The distance that prevents prompt propagation; however, late time propagation of reactions between PESs is possible. (Mission capability will likely be impaired.)

(2) Where Q-D considerations must be relaxed, preventing propagation and preserving personnel, military equipment, and ammunition should be paramount. In some situations that do not meet the specific requirement, equivalent protection can be provided by the use of protective construction or by restructuring the operation. Situations where equivalent protection is provided must be supported by analysis and approved by the appropriate level of command. Equivalent protection that meets the regulatory requirements are not considered a waiver or exemption.

(3) Tactical situations that are not covered by explosives safety regulations should be managed using the Army risk management process. Commanders should identify the hazards associated with the operation, assess these hazards, develop controls and make a decisions based on the analysis and lastly, supervise and evaluate the operation and controls.

(4) The third factor in Q-D explosives safety calculations is time. The degree to which standards are relaxed should be directly related to the duration of the exposure. Relaxation of standards for 24 hours involves less risk than relaxation for 48 hours.

(5) The acceptance of a high degree of explosives safety risk depends on the competing hazards of the battlefield. The risk of an explosives accident may be far outbalanced by more imminent battlefield hazards as ammunition approaches the forward line of own troops (FLOT).

(6) Ammunition logistical considerations and warfighting requirements should take precedence over compatibility in the mixing and grouping of ammunition items.

(7) Hazard Class/Division 1.2 ammunition should be treated as HD 1.1. When it becomes impractical to manage ammunition by hazard class, all ammunition, except identifiable HD 1.4, should be treated as HD 1.1. All captured ammunition, mixed ammunition, and unserviceable or unknown ammunition will be treated as HD 1.1.

d. When handling ammunition in the field, the following general principles apply:

(1) Soldiers controlling or supervising the handling of ammunition must observe safety precautions. Every effort will be made to ensure that skilled and knowledgeable personnel are in charge of ammunition operations.

(2) In field storage, ammunition should be distributed in such a way that an incident will not cause the total stock of any one type of ammunition to be lost.

(3) Ammunition should be dispersed to minimize loss in the event of fire, accidental explosion, or enemy action.

(4) Fire fighting precautions must be taken and fire fighting equipment must be serviceable. All fires will be fought immediately without special order (para 15–2e).

(5) Ammunition of unknown origin and captured ammunition will be examined, evaluated, and classified by qualified personnel and stored in a designated collection point (para 15– 2d).

(6) The existing infrastructure and terrain features (for example, buildings, barns, forests, barriers, and so forth) will be used to prevent propagation and to protect personnel and material from the effects of an explosion. Dry water courses will not be used during anticipated periods of heavy rain.

(7) Ammunition containing WP will be stored and transported in an upright position if ammunition surface temperatures are expected to exceed 111 degrees F.

(8) In any given field situation, all measures must be taken, to minimize the risk to personnel, material, and ammunition.

(9) Provisions must be made to evaluate and, if necessary, segregate damaged ammunition.

(10) Provisions should be made, particularly for contingency operations of expected short duration, to save and segregate packing material to be reused to turn in safely and transport unused ammunition.

15–2. Theater and corps ammunition storage areas

a. Quantity-distance.

(1) Where the local situation allows, the peacetime Q-D specified in chapters 5 should be followed. This level of protection limits the risk to the civilian and unrelated military population from death or serious injury from blast overpressure and fragments due to an explosion, protects vital facilities from serious damage, and protects ammunition from propagation.

(2) Where the local situation does not allow for this level of external protection, the internal protection should be maintained. Any reduction in either internal or external distances increases the risk to adjacent facilities and other

ammunition locations. Stacks of ammunition should be stored at the magazine distances specified in chapters 5. This level provides reasonable protection against propagation but risks the total destruction of exposed buildings and aircraft as well as death or serious injury to exposed personnel. (Every effort should be made to identify and protect facilities with dense population, such as hospitals, military facilities, headquarters, and POL storage, vital to the accomplishment of the mission.)

(3) Where existing ammunition storage sites are to be converted to wartime use, the ammunition storage license (chap 9) lists the maximum NEW for which these sites will provide the level of protection described in (2) above.

(4) Where specific unimproved locations have been identified for use as wartime/contingency ammunition storage sites, MACOMs may wish to develop ammunition storage licenses, providing the levels of protection described in (1) and (2) above, and integrate these licenses into warplans.

(5) Permanent or contingency facilities with a designated wartime ammunition mission, such as ports, must integrate explosive safety Q-D guidance into war plans.

b. Compatibility. If at all practical, ammunition compatibility (Table 15–1) should be maintained during bulk storage.

(1) Compatibility does not apply to CCLs.

(2) Components of complete rounds may be stored together, for example, fuzes, projectiles, propelling charges, and primers.

(3) Blasting caps which are not in original packing configuration present a unique hazard and should be separated from other ammunition by sandbags or other suitable material.

(4) Logistical considerations and combat requirements take precedence over compatibility considerations.

c. Storage considerations

(1) Serviceable NATO standard ammunition, which has an assigned HD and SCG will be stored in the same manner as U.S. ammunition.

(2) Unserviceable ammunition, regardless of the nation of origin, will be segregated from serviceable war reserve ammunition and appropriately tagged to prevent unintentional use.

(3) Captured ammunition, regardless of nation of origin, will be segregated in a designated collection point and separated from war reserve ammunition using HD 1.1 distances. Following examination, evaluation, and classification by qualified personnel, it may be assigned a temporary HD and SCG, if necessary, by analogy to U.S. ammunition items.

d. Firefighting. All fires in the vicinity of ammunition should be fought until the stacks of explosives or ammunition become involved in the fire. Because evacuation to IBD will not always be practical, seek protection from an imminent explosion in trenches and behind natural earthen barricades.

15–3. Storage at the ASP and ATP

a. The same principles of explosives safety in ammunition storage and handling apply at ASPs and ammunition transfer points (ATPs) as at theater and corps ammunition storage areas.

b. The principal explosives safety objectives should be the prevention of propagation and the dispersion of ammunition to minimize loss in case of fire, accidental explosion, or enemy action.

c. Since more risk is assumed at an ASP or ATP, field storage (para 15–5) should be considered a routine storage option. Ammunition may be stored, according to logistical considerations and combat requirements, using either paragraph 15–2 or paragraph 15–5.

d. Where real estate constraints do not permit the separation distances specified in Table 15–2, modular storage (para 8–29) should be constructed.

15–4. Short-term ATP storage

a. At ATPs where ammunition is stored for periods of 3 days or less, ammunition will be positioned to fulfill logistical and administrative requirements.

b. Wherever possible, field storage (para 15–5) or modular storage (para 8–29) should be used.

c. All explosives safety requirements must be observed.

15–5. Field storage and handling areas.

a. General. Field storage and handling areas shall be sited in accordance with Table 15-2. Use separation distances from the various Chapter 5 distance tables, for the type and quantity of explosives involved with the PES.

b. Field storage and handling area layouts. Field storage and handling areas may consist of all or only some of the following areas:

(1) *Storage sections.* A location where A&E is stored. The principal objective of the field storage concept is the dispersion of ammunition to minimize loss in case of fire, accidental explosion, or enemy action. Each type of ammunition should be stored in multiple, widely separated storage sections to prevent the loss of any one section from

seriously handicapping military operations by the loss of the entire supply of an item. Storage section separation distances are designed to prevent simultaneous detonation from adjacent storage sections.

(2) *A&E staging area.* A&E staging areas are normally used as a holding area for outgoing A&E and for ready access to combat aircraft loading areas.

(3) *Captured enemy ammunition area.* A separate area shall be provided for the storage of captured enemy A&E. Captured enemy munitions that can not be identified shall be treated as Hazard Division 1.1.

(4) *A&E operations area.* An area used for operations such as minor maintenance and repair of A&E or their containers, surveillance, segregation, or weapons assembly.

(5) *A&E destruction area.* A demolition area used for the destruction of A&E and may consist of a burning area or a demolition area.

(6) *Sling out area.* An area used for the movement of A&E by rotary wing aircraft.

(7) *Administration and billeting areas.* Inhabited locations not directly related to the daily operations of the field storage area.

(8) *Boundaries.* The clear zone surrounding the field storage area, bound by the IBD arcs. No unrelated, occupied structures are permitted within these arcs.

(9) *Manned non-explosives support facilities.* Facilities that directly support A&E operations, such as field offices and A&E support equipment maintenance facilities.

(10) *Un-manned non-explosives support facilities.* Unmanned locations that support A&E operations such as forklift charging stations, dunnage storage, and buildings that store inert materials. A minimum 15-meter (50-foot) separation distance shall be maintained from these locations to PESs.

c. Storage in existing facilities. Ammunition and explosives may be stored in caves and tunnels as prescribed in Chapter 5.

d. Barricades and revetments. The construction of and use of barricades and revetments shall be per chapter 5.

e. Commercial Intermodal Containers (CIC). Containers used for transporting ammunition may be used for ammunition and explosives storage and shall be sited as above-ground magazines. The containers may be sited individually or by groups.

f. Segregation of Ammunition and Explosives. Compatibility group will segregate ammunition and explosives unless grouped together as CCLs.

15–6. Transportation within the theater of operations

a. When selecting vehicles to transport ammunition, if vehicles meeting peacetime standards are not available, choose vehicles which do not present a fire hazard. That is, vehicles with leaks, sticking brakes, holes in the floor of the cargo area, or exhaust problems should be avoided.

b. Ammunition loads must be secured to prevent shifting and loss of the load during transport.

c. Vehicles should be equipped with two fire extinguishers to allow for fighting vehicle fires enroute.

d. Considerations of compatibility will not apply to the transport of CCLs or other configurations being transported in the direction of the FLOT. However, when mission permits, consideration should be given to transporting SCGs "H, " "J, " "K," and "L" on separate vehicles.

15–7. Modular storage

a. In a combat zone where insufficient real estate, limited security or operational requirements are determining factors, the modular system of storage may be employed. This system does not provide the degree of protection to personnel or ammunition stocks afforded by the Q-D requirements previously described in this chapter and should be implemented only as a last resort.

b. The decision to use the modular system must be made with full realization of its advantages and disadvantages over other field storage systems.

(1) The advantages include—

(a) Greatly reduced real estate requirements.

(b) Greatly improved security with comparable forces.

(c) Reduced transportation requirements within the ammunition area.

(d) Greatly reduced road net requirements.

(e) Reduced vulnerability to direct fire on ammunition stocks because of the smaller area and use of barricades.

(2) The disadvantages include—

(a) The possibility of explosion or fire in one cell starting fire in other cells because of heat generation or indirect fragment dispersion

(b) Increased vulnerability to enemy indirect fire and air-dropped bombs because of concentration of stocks

(c) Additional engineer support required for initial construction of modules as opposed to that required for unbarricaded open storage.

c. A module is a barricaded area composed of a series of connected cells separated from each other by barricades.

Construction requirements and siting criteria for modular storage are described in para 8–29 of this pamphlet. However, in wartime operations the following exceptions apply:

(1) There is no restriction on the type of ammunition authorized for modular storage.

(2) Mixing ammunition stocks in modular storage is authorized.

15–8. Ammunition turn-in at the cessation of hostilities

a. At the cessation of hostilities the Army will commence transition to the peacetime provisions of this pamphlet.

b. Ammunition will be collected and stored at selected storage areas and turn-in points meeting the Q-D requirements of chapter 5. Where this is not practical, the guidance of this chapter may be used temporarily.

c. Segregation, inspection, field maintenance, destruction, and repackaging of turn-in ammunition will be accomplished in accordance with established logistics procedures. However, because of the increased hazards associated with turn-in ammunition, these activities will take place in strict compliance with the separation distances specified in chapter 5.

d. Ammunition will not be offered for shipment to CONUS locations until a qualified military or civilian expert has certified in writing that the ammunition meets peacetime safety standards or equivalent for transport.

15–9. Emergency destruction of ammunition

When it becomes necessary to destroy stores of munitions to prevent them from falling to the enemy, care must be taken to ensure that assets otherwise not in danger of falling to the enemy are not destroyed by blast or fragments. Adjacent military units will be informed before the destruction takes place.

Table 15–1
Wartime compatibility chart

Groups	A	B	C	D	E	F	G	H	J	K	L	N	S
A	X	X											X
B	X	X	X	X	X	X	X						X
C		X	X	X	X	X	X					X	X
D		X	X	X	X	X	X					X	X
E		X	X	X	X	X	X					X	X
F		X	X	X	X	X	X						X
G		X	X	X	X	X	X						X
H								X					X
J									X				X
K										X			
L													
N			X	X	X							X	X
S	X	X	X	X	X	X	X	X	X			X	X

Where intersections are marked with an "X", items are compatible and may be stored together.

Table 15–2
Q-D for field storage and handling areas.

From / To	Storage Sections	A&E Staging Area	Captured Enemy Ammunition Area	A&E Operations Area	Sling Out Area	A&E Destruction Area
Storage Sections	IM	IM	PTR	IM	IM	IN ACCORDANCE WITH CHAPTER 5
	Note 2	Note 2	PTR	Note 2	Note 2	
A&E Staging Area	IM	IM	PTR	IM	IM	
	Note 2	Note 2	PTR	Note 2	Note 2	
Captured Enemy Ammunition Area	IM	IM	IM	IM	IM	
	Note 2	Note 2	PTR	Note 2	Note 2	
A&E Operations Area	IM	IM	PTR	IM	IM	
	Note 2	Note 2	PTR	Note 2	Note 2	
Sling-Out Area	NR	NR	PTR	IM	IM	
	Note 2	Note 2	PTR	Note 2	Note 2	
Administrative and Billeting Area	IBD	IBD	IBD	IBD	IBD	
	IBD	IBD	IBD	IBD	IBD	
Boundaries	IBD	IBD	IBD	IBD	IBD	
	IBD	IBD	IBD	IBD	IBD	
Manned Non-Explosive Support Facility	IL	IL	IBD	IL	IL	
	Note 2	Note 2	IBD	Note 2	Note 2	
Un-Manned Non-Explosive Support Facility	NR	NR	PTR	NR	NR	
	Note 2	Note 2	PTR	Note 2	Note 2	
A&E Destruction Area	IN ACCORDANCE WITH CHAPTER 5					

Notes:
1. The distance criteria in the upper half of each row is the minimum separation distance in accordance with Chapter 5.
2. The distance criteria in the lower half of each row are the asset preservation distance. For HD 1.1 material apply $D= 9.5Q^{1/3} / 12Q^{1/3}$ (K24/30) separation. For HD 1.2,1.3, or 1.4 apply PTR distances from Chapter 5 tables.
3. IM = Intermagazine Distance
4. PTR = Public Traffic Route (includes minimum fragment distance)
5. IL = Intraline Distance
6. IBD = Inhabited Building Distance (includes minimum fragment distance)
7. NR = Not Required

Chapter 16
Storage and handling of commercial explosives

16–1. Background

This chapter provides guidance on the storage and handling of commercial explosives on Army installations.

16–2. Use

Using commercial explosives, other than for production and RDTE, is prohibited unless commercial explosives are mission essential and specifically authorized by the installation's MACOM commander (see para 16–3e and f below).

16–3. Procedures

a. Obtain approval to use commercial explosives before purchase.

b. The HD and SCG information will be requested and should be received before purchase.

c. When commercial explosives are received before USATCES assigning HD and SCG information, commercial explosives will be stored as HD 1.1, SCG L. Small arms ammunition will be stored as HD 1.4, SCG S.

d. The net explosive weight (NEW) will be calculated based on the weight of the explosive.

e. Approval request will be sent through command channels to the installation's MACOM approving authority.

f. When the requesting unit is a tenant activity, the request will be sent through the unit's command channels and the host installation's MACOM approving authority must concur with the approval.

g. The HD and SCG will be obtained by providing the following information to Director, U.S. Army Technical Center for Explosives Safety.

(1) Documentation of an HD assignment by a competent authority; that is, DOT, BOE, Bureau of Mines (BOM), or foreign government; or reports of HD testing or function testing accomplished by a competent authority; or results of small scale laboratory tests conducted by a competent authority.

(2) Complete item nomenclature.

(3) Part number, drawing number, or something that uniquely identifies the item in its storage configuration.

(4) Explosves composition and weight. A chart or listing of hazardous materials with their weights is preferred.

(5) Packaging data.

(6) Number of independent safety features if the item is a fuze, contains a fuze, or has features similar to a fuze.

(7) Any other available information that may reflect the function or the effects of the explosive.

(8) A point of contact and telephone number for the responsible Army organization.

h. To receive inspection interval codes and inspection procedures, forward information in f above, to Commander, Industrial Operations Command.

16–4. Commercial dynamite

a. Dynamite is sensitive to heat and shock. Containers suspected of containing sticks of dynamite that may exhibit signs of exudation or crystallization (generally, these boxes have an oily appearance) will be removed from the magazine and inspected. Individual sticks having exudation or crystallization will be demilitarized immediately. The remainder can be repacked and returned to storage. Empty containers that have been used for dynamite will be destroyed by burning. Oily stains of nitroglycerin on magazine floors will be scrubbed up with a mixture of solution A (Sodium sulfide - 9 parts by weight and water - 30 parts by weight.) and Solution B (Denatured ethyl alcohol - 70 parts by weight and acetone - 20 parts by weight). Immediately before decontaminating the nitroglycerin, combine the solutions. If the solutions are mixed and then stored, the potency diminishes in storage. Limit the use of this mixture to very small quantities such as the oily film that adheres to surfaces after the nitroglycerin has been removed with sponges or absorbed in wood pulp or sawdust. Operators using this solution should wear rubber gloves.

b. Store cases of commercial dynamite initially right side up, so cartridges will lie flat. However, to reduce the possibility of exudation of nitroglycerin from the cartridges of straight dynamite 60 percent or over in strength, it will be necessary to turn the cases, based on average storage temperature (Table 16–1).

c. The first turning will leave the cases bottom side up, with the cartridges still in a horizontal position. The second turn of the boxes will place the boxes right-side-up. Each turn of the boxes will be 180 degrees. Frozen dynamite will not be turned. With the exception of straight dynamite, 60 percent and over in nitroglycerin strength, other types of dynamite-ammonia, ammonia-gelatin, and gelatin need not be turned in storage. However, yearly, at the conclusion of the year's warmest season, a representative sample will be selected and the containers examined for evidence of nitroglycerin on the exterior of the cartridge and/or packing materials.

Table 16–1
Turning of commercial dynamite

Average storage temperature	Interval between turnings
Below 30 degrees (F)	Do not turn
30 to 60 degrees (F)	Every 4 months
60 to 75 degrees (F)	Every 3 months
Over 75 degrees (F)	Every 6 weeks

Chapter 17
Demilitarization

17–1. Demilitarization

This chapter covers demilitarization operations to include demolition and burning operations done as a separate operation. It does not cover EOD operations. It does not cover demolition and burning operations done as part of a training exercise providing that—

a. The item to be destroyed was generated during training.

b. The item would normally be destroyed as part of the wartime mission.

c. The item has not been returned to storage.

17–2. Methods

Disposition of ammunition, explosives, and propellants will be accomplished by reclamation, open detonation, open burning, incineration, or other approved methods. Unless emergency disposition is required, resource recovery and recycling efforts will be the primary means of disposing of unwanted ammunition and explosive materials. The burying or dumping of ammunition, explosives, or propellants is not an approved method of disposal.

17–3. Safety precautions

a. General precautions. No demilitarization operation will take place without an approved SOP. SOPs used for these type of operations will be reviewed at the local level at least annually for compliance with local laws and regulations involving demilitarization. SOPs which are not in continuous use and have not been used within the past 6 months will be reviewed and updated before the beginning of an operation.

b. Burning/detonation operations.

(1) A red range flag will be flown or a red light will be lit at the entrance to the range when operations are in progress. A red light will be used during any operations occurring after sunset.

(a) The flag will be a minimum of 3 feet wide by 5 feet long. This flag will continue flying until the range has been cleared and all operations have ceased.

(b) The light will be of sufficient size and clarity to be seen from at least 100 feet under all weather conditions in which operations take place. This light will continue to burn until the range has been cleared and all operations have ceased.

(2) A sign will be placed on the access road to the range explaining the meaning of the red light and red flag. This sign will be located at least 100 feet from the gate and will be lighted during night operations. This sign will be in English and foreign languages required by the area.

(3) A first aid kit will be present during all operations. It will contain, as a minimum, items to treat burns and puncture wounds. The first aid kit used will be approved by local medical authorities based on the hazards involved. Personnel will be trained in using the first aid kit and its limitations. They will be instructed that if there is any doubt as to its use, that they will seek professional medical care for the injured person.

(4) A means of communications between personnel on the demolition range or burning area and base facilities will be maintained in working order. A further means of communications will be maintained between personnel preparing

items for demolition or burning operation and the control center on the range. Operations will not be conducted if one or both of these means of communications is not working. Radios will not be used when electrically initiated explosives are being used, unless in compliance with Table 6–3.

(5) Firefighting equipment will be present at the scene to combat fires which may start due to operations. The amount and type of equipment will vary with local conditions and will be approved by the installation fire marshal.

(6) After each demolition or burning operation, trained and competent personnel will search the area for hazardous items. The search will begin after an appropriate waiting period as specified in the SOP for the operation. Personnel will be instructed in the type and shape of the items being destroyed as well as what to do upon finding an item. In the event of a misfire, a waiting period of 30 minutes will be observed prior to investigation of the misfire.

(7) In areas where the demolition ranges or burning grounds are not under constant control of U.S. military, the following requirements will be strictly adhered to:

(a) Before the start of operations, the range will be searched for unauthorized personnel.

(b) Guards will be posted to prevent entry into the range area. Guards will be protected from fragments.

(8) All personnel shelters will protect against overpressures greater than 2.3 psi and against noise louder than 140 decibels if the noise level exceeds 140 decibels. Personnel will wear hearing protection in accordance with DA Pam 40–501. If the noise level is greater than 165 decibels, then earplugs must be worn in combination with a noise muff or a noise attenuating helmet.

(9) All burning and demolition operations will be initiated remotely or by using a delay device. If a delay device is used, it must allow for a delay that is 50 percent longer than the time that would normally be required to retire to the shelter.

17–4. Site selection for burning or demolition grounds

a. Open Burning (OB) Areas. Sites for burning of ammunition and explosives shall be separated from other facilities as specified in paragraph 5–7p.

b. Open Demolition (OD) Areas. OD operations will be sited according to the requirements for paragraph 5–7c.

c. Burning and demolition sites. All disposal sites permitted as hazardous waste treatment facilities under 40 CFR must be sited in accordance with 40 CFR 265.382.

17–5. Burning sites

a. Burning pans or trays will be of locally approved construction.

b. Burning pads constructed of concrete will be covered with a minimum of a 4–inch bed sand to protect the concrete. When the user intends to dispose of the sand, tests for hazardous waste characteristics will be conducted.

c. All burning sites will have a means of collecting remnants and eventually disposing of any hazardous wastes produced by the operation.

d. Burning sites will—

(1) Ensure that the items to be burned are spread evenly over the burning pan or pad, so that the depth of the material does not exceed 3 inches. Items which exceed 3 inches in diameter may be burned, provided they are stacked only one item high.

(2) Be sited so that the distance between each active burning site will be sufficient to prevent a burning ember from landing on adjoining sites.

e. Installations must establish written procedures to prevent materials to be burned from igniting from heat or residue remaining in pan trays or on pads.

17–6. New demilitarization technologies

a. The Army encourages the development of new technologies for reclamation which will—

(1) Result in less hazardous waste.

(2) Be economically feasible. (The sale of residue will be included in making the determination of whether a technology is economically feasible.)

(3) Be environmentally safe.

(4) Meet the requirements of AR 385–16.

b. Coordinate the development of new technologies with the Director, USADACS.

c. In developing new technologies or testing them before final approval for use is given, the following procedures will be followed:

(1) A hazard analysis will be conducted to determine the level of risk involved and the required safety measures needed.

(2) Based on (1), a written procedure will be developed before running a test.

(3) A dry run will be conducted before using live explosives to verify the mechanics of the procedure.

(4) Only the minimum number of personnel using the minimum amount of explosives will be used to verify the proposed technology.

Chapter 18
Maintenance

18–1. General information

a. Maintenance is maintaining explosives and ammunition in a serviceable condition or restoring them to that condition. It includes such operations as renovation, modification, preservation, and packing.

b. Maintenance includes all operations from the time of delivery of the ammunition to the maintenance building to the time it is ready for shipment to storage or issue. Maintenance operations involve the following: line layout, establishing barricades as appropriate, setting up equipment, partial or complete disassembly of ammunition items, cleaning parts or subassemblies, repair or replacement of mechanical parts, replacement of explosive components, reassembly, repainting and remarking, and the repacking and remarking for shipment and delivery to an ammunition issuing point.

c. Renovation or modification of conventional ammunition, missiles, ammunition or missile components and explosives will be accomplished only with specific authority from Industrial Operation Command (IOC), Aviation and Missile Command (AMCOM), or other authority as appropriate.

d. The necessary preservation and packing (P&P) may be performed on unserviceable ammunition and components when a requirement exists.

18–2. Safety requirements

a. Renovation.

(1) Renovation will be performed in an isolated area or building specifically designed for that purpose. These operations will be carried out in conformity with the quantity-distance requirements of Chapter 5. The number of persons permitted at or near the operation will be kept to a minimum. The area or buildings will be kept free of loose explosives, waste paper, and other combustible material. All work will be performed under the direct supervision of experienced personnel.

(2) Renovation operations can be hazardous. They require a thorough knowledge of the activities involved, the hazards to be guarded against, and the precautionary methods necessary for greatest protection to personnel and property. Before starting any operation involving ammunition or explosives, an adequate SOP will be developed and approved—

(a) By the commander of the establishment, or,

(b) By a qualified member of his or her staff who has been delegated authority to review and approve the SOP.

(3) Controlled tests may be necessary to establish SOPs for certain operations. The SOPs will include, as a minimum, such items as safety requirements, personnel and explosives limits, equipment designation, and location and sequence of operations. A dry run will be done using inert components to ensure that the SOP includes all necessary operations, equipment and, procedures. No deviation from this procedure will be permitted unless the commander or his designated representative approves.

b. Allowable limits. The quantity of explosives or ammunition at an operating location will be the minimum necessary to carry out the operation. This quantity will be subdivided to the maximum extent possible into smaller amounts, adequately separated to prevent propagation. Personnel exposure will be minimum consistent with safe, efficient, and continuous operation.

c. Internal movement of explosives. Items or groups of items of ammunition and explosives that are transported from

bay to bay within an operating building, will be separated to preclude creating a path for the propagation of an explosion or fire between bays. For this purpose, the minimum spacing between items or groups of items in transport will be intraline distance unless reduced distances have been approved. Suitable shields or barricades may be used to interrupt the propagation path between items on a conveyor when approved. Appendix F shows the approved safe separation distances of conveyor spacing for specified items based on configuration of the item, position on the conveyor, distance between items and, if needed, the shield or barricade.

d. Concurrent operations.

(1) Unless a building is specifically designed and approved for concurrent operation, permissible concurrent operations will be accomplished in separate buildings located at the appropriate intraline distance from other operating buildings in the area.

(2) When necessary to conduct concurrent operations in the same building, they must be arranged in a manner to segregate the items so that dissimilar hazards are separated by a reinforced concrete dividing wall. Unrelated personnel involved in concurrent operations in a single building must be afforded protection equivalent to IL distance (K18).

(3) Operations involving nuclear weapons and associated major assemblies will be separated from conventional ammunition operations by not less than the applicable inhabited building distance based on the quantity of explosives at the conventional ammunition operation. In such instances, explosives limits for the nuclear weapons facility may be determined by applying intraline quantity-distance requirements.

(4) The quantities of explosives and number of personnel exposed at each concurrent operation will be held to the minimum consistent with safe and efficient operating procedures.

e. Operations within a magazine area.

(1) Explosives and ammunition will not be renovated, modified, or demilitarized within a magazine. These operations will not be carried on within the magazine area unless the site, empty magazine, buildings, or rail cars in which the work is done are assigned exclusively to such work. Temporary operations outside of the magazine may be carried out as permitted in (2) below. Permanent structures involving labor intensive operations must be properly sited with an approved site plan.

(2) The performance of P&P operations in the magazine area may be approved by the installation commander as field operations and separated from the PES by intraline distance based on the larger quantity of NEW at either the PES or ES. Such operations will be limited to derusting and painting of bombs and separate loading projectiles, opening and repacking boxes and metal containers of ammunition (including chemical ammunition), repacking of ammunition into serviceable boxes and fiber containers, spot painting projectiles, maintenance of fuze cavities and base covers of separate loading projectiles, and other relatively safe operations of the same general type.

f. Division of explosive quantities. The division of large quantities of explosives material into a number of smaller quantities, using dividing walls, is intended to prevent the simultaneous explosion of the total quantity involved. If the explosives on both sides of a dividing wall are prevented from exploding simultaneously, the wall achieves its purpose. If this requirement is met, then, for the purpose of quantity-distance computations, the quantities separated by dividing walls need not be added together. Design of intervening barriers in accordance with the principles contained in TM 5–1300 will satisfy this requirement. Information on barricaded open storage modules meeting this criteria are given in paragraph 8–29 of this pamphlet.

18–3. Operational shields

a. Shields required. Operational shields are required when the operation to be performed provides an unacceptable risk of exposure as defined by paragraph 5–7*k* of this pamphlet.

(1) Operational shields prevent operator exposure to blast overpressure in excess of 2.3 psi, fragments to energies of less than 59 ft-lb, and thermal fluxes to 0.3 calories per square centimeter per second. For operations involving intentional initiation or detonation, operational shields shall be capable of limiting overpressure levels (decibels) in personnel-occupied areas to satisfy the requirements of MIL STD 1474. (MIL STD 1474 overpressures are expressed as decibels. The conversion factor is: $dB = 20(\log (144/4.2 \times 10^7))$

(2) Shields complying with MIL STD 398 are acceptable protection. Shields which have not been tested in accordance with the requirements of MIL STD 398 shall be evaluated by competent personnel before beng used in ammunition operations.

(3) Determination of the maximum credible event for the materials and operational scenario involved is an essential part of the evaluation of the operator protection requirements.

b. Unacceptable risk. In addition to those operations where a risk assessment per paragraph 5–7*k* shows an unacceptable risk, operational shields will be provided to separate the operator from the item being processed for the following operations:

(1) Disassembly of loaded boosters, fuzes, primers, and blank ammunition.

(2) Removal of base plugs from loaded projectiles where the design of the projectile is such that explosive contamination of the base plug is not positively precluded.

(3) Removal of fuzes from pentolite loaded projectiles.

(4) Disassembly of loaded bombs and warheads, except for removal of shipping bands, nose and tail closing plugs,

fin locknuts, and washout of high explosives bursting charge, unless covered by an approved letter of instruction (LOI)/ Depot Maintenance Work Requirement or developed and approved under paragraph 17-6.

(5) Removal of fuzes from hand grenades loaded with high explosives except as noted in *c*(6) below.

(6) Pull-apart of fixed ammunition, 20mm and larger. In the pull-apart of rounds containing self-destroying tracer, the dimensions of the shield will anticipate initiation of the propellant and the projectile. Pull-apart of ammunition with inert projectiles will use initiation of the propellant as the maximum credible event. Pull-apart of ammunition with explosives loaded projectile, but without self-destroying tracer, will use initiation of the propellant as the maximum credible event.

(7) Disassembly of foreign ammunition or other ammunition of uncertain design and condition.

(8) Electrical testing of igniter circuitry of rockets, missiles, or any other electrically initiated explosives item. Electrical testing of igniter circuitry in missile and rocket motors and other propulsion systems shall use initiation of the propellant as the maximum credible event. Electrical testing of initiating components of warheads, projectiles, and similar items shall use initiation of the warhead or projectile and propellant as the maximum credible event unless hazards analysis shows negligible probability that test-energized circuitry could cause explosives functioning.

c. Shields not required. The operations (1) through (6) (below) and similar operations do not require operational shields to protect operators if the assembly has been normal, and if regular equipment, tools, and methods used in the assembly are sufficient to accomplish the disassembly without the application of undue force. Undue force is considered to be any force greater than the maximum allowable disassembly torque specified on the current drawings for the item under consideration. Tools used for disassembly will not have greater lever advantage than those required for the assembly. In these cases, care will be taken to ascertain that the assembly has been normal and the surfaces to be separated are not corroded and have not been sealed with metallic caulking, laminac, or epoxy resin whose strength exceeds the adhesive properties of Pettman Cement or NRC compound.

(1) Removal of loaded fuzes and fuze well cups from loaded projectiles.

(2) Removal of primers from mortar ammunition.

(3) Removal of ignition cartridges from mortar ammunition.

(4) Removal of boosters or bursters from loaded projectiles.

(5) Removal of setscrew from loaded projectiles. When drilling equipment is used to remove stake-punch marks and back out setscrews, positive stops on the drill must be provided to prevent the contact of the drill with the component parts of the fuze or booster which contain explosives or with the explosives in the projectile. Drills will be changed and positive stop set only by competent mechanics. Only fully trained personnel will be used for such operations. Before the operation is begun, the projectile must be examined for the presence of exudate or other abnormal conditions.

(6) Removal of detonating fuzes from hand grenades designed with metal fuze well liners provided:

(a) The operation is performed immediately in front of a suitable protective tank having effective baffles for delay type fuzes into which the grenade can be deposited should it ignite prematurely. Baffle type tanks will not be used for grenades having impact fuzes.

(b) Shielded trays are employed to receive fuzes removed from the grenades. The maximum number of fuzes allowed at each disassembly station may not exceed fifty.

(c) Fuzes which will not readily disassemble from the grenade with the equipment adjusted to the appropriate torque are immediately removed from the holding fixture and transferred to adequately shielded locations where they may be removed in accordance with the requirements contained in *b* above. Fuzes in this category will be inspected for any defects which would render the item unsafe for handling or further processing.

d. Disassembly operations.

(1) Each disassembly operation will be separated from adjacent similar or dissimilar operations by operational shields designed to protect the operator at any operation from the blast and fragments arising from a possible explosion at any adjacent operation. Components will be protected from a possible explosion occurring at the disassembly operation.

(2) When disassembly of ammunition or components not generally included in paragraph 18–3 is contemplated, specific approval of the proposed methods and locations for the operations must be obtained in accordance with the procedures outlined in chapter 11.

(3) When disassembly is required to be performed with the operator protected by any operational shield (disassembly means complete separation (threads or other connections) of component parts)), the operator must not loosen the components while shielded and then complete the disassembly without protection.

e. Containers for waste explosives. Explosives destined for the burning ground will be in the original closed packages or in containers of fire-retardant materials which will not contribute to the existing hazard by readily producing sparks when contacting rocks, steel, or other containers. Bags or containers made from easily ignited material will not be used. Containers will have closures that will prevent spilling or leakage of contents when handled or if overturned. Closures will be of a type that will not pinch or rub explosives during closing and opening. The closures and surfaces of container openings will be thoroughly cleaned of explosive contamination to minimize the hazard during closing or opening.

18–4. Equipment for shielded operations

As used in this paragraph, the word "suitable " refers to a certified or tested item. Normally, the equipment required for shielded operations consists of a suitable shield, holding devices, operating device, means of observing the operation, and means of safely transmitting power required for the operation.

a. A suitable holding device, located behind the operational shield may consist of some form of a vise or jig on either a fixed or an adjustable base, placed in such a manner as to hold the item in a position to apply the operating device.

b. A suitable operating device may be a wrench, screwdriver, or other tool designed to accomplish the work to be performed.

c. A suitable means for observation may be an indirect viewing system of mirrors or a television camera located so that personnel may operate at a safe distance. (A safe distance provides 2.3 pounds per square inch (PSI) protection to the operator.)

d. A suitable means of transmitting power to the operating device normally consists of a shaft extending through the shield. The shaft will have a positive stop in front of the shield to prevent the shaft from being blown through the shield toward the operator in the event of an explosion. Personnel will not be in a direct line with a shaft.

18–5. Tools, equipment and supplies

a. Tools. The basic tools and equipment for Ammunition Renovation and Field Maintenance are listed in SC 4925–95–CL-A03. Specific tools for ammunition operations are listed in the applicable TM.

b. Equipment

(1) Equipment that is designed specifically for ammunition is listed in TM 43–0001–47 and described in the operational and parts manual for each piece of equipment. Additional lists may be found in TM 9–1300–250.

(2) Other tools and equipment that have to be specially designed will meet strength requirements and guard against the introduction of chemical, mechanical, or electrical hazards over and above the normal hazard of the explosives and ammunition involved. Special tools and equipment, designed and fabricated locally, will require prior approval by the appropriate commodity command before use.

18–6. Protection of primers

Preventative measures must be taken in the design of equipment, transportation, and operations to protect not only loose primers but also primers in rounds or in components from accidental impact or pressure. Where feasible a protecting cap will be placed over the primer. Bodies of hand trucks and other conveyances used for transporting the primed items must be free from stones, protruding nails, and other projections and debris which might cause the primer to function. When primed items are transported on their bases, the containers or truck bed will be recessed at the point primers would otherwise make contact.

18–7. Cleaning ammunition

Power tools with nonferrous brushes may be used on ammunition or ammunition components only when there are no exposed explosives or thin walled casings where brushing would create heat or friction sufficient to initiate the item involved.

18–8. Spray painting

a. All spray painting operations involving flammable liquids will comply with 29 CFR and/or NFPA 77 whichever is more restrictive.

b. Water wash or dry filter-type spray booths will be used exclusively for loaded ammunition and inert items. Filters for dry type booths must not support combustion when clean and must be capable of effectively arresting paint overspray. They must be replaced whenever the type of paint being sprayed is changed, and as directed to maintain required airflow measures. Paint encrusted filters will be disposed of promptly when found.

c. Electrical equipment, devices, apparatus and wiring will comply with the requirements of Article 516, Spray

Applications, Dipping, and Coating Processes, of the NEC. Equipment will also be listed for the appropriate hazardous location as determined by use of Article 500, Hazardous (Classified) Locations, of the NEC.

d. Automatic sprinkler protection will be provided as follows:

(1) Above each paint booth and 20 feet horizontally beyond the perimeter of the paint booth.

(2) Installed in exhaust ducts, 6 feet or more in length. If the ducts pass through combustible walls, ceilings, or roof structures, the sprinkler heads inside the ducts, will be no more than 12 feet apart.

(3) For dry-type paint booths, automatic sprinklers will be installed behind the filters.

e. Controls for paint spray booth ventilating fan motors will be interlocked with the controls for the paint sprayer. With this arrangement, failure of the ventilating system will shut off power to the paint sprayer.

f. For additional paint booth and flammable storage requirements, see NFPA 33.

g. Where it is necessary to set up field operations and the requirements of a above, cannot be met, spray painting of sizable quantities of loaded ammunition or inert items is permissible if:

(1) Paint booths are constructed of noncombustible material.

(2) An exhaust system with fan is installed to remove paint fumes from the booth (the fan may be powered by an air motor).

(3) At least two 10BC (or larger) CO2 or foam-type extinguishers are installed within the booth with rate-of-rise actuated nozzle attachments. Two manual type CO2 or foam-type portable fire extinguishers must also be provided at the paint spray booth or operation.

(4) Special precautions are taken to keep the booth clean and prevent the accumulation of paint on the surface of the booth or fire extinguisher nozzles.

(5) The number of items in the booth at any one time are restricted to the minimum number required for efficient and continuous operation.

(6) The area within 50 feet of the paint booth is kept free of combustible material, such as dry vegetation, wooden pallets, combustible crating, or packing materials.

(7) Paint and chemical mixing operations, supplies, and air compressors are located at least 50 feet from the booth.

(8) Personnel limits are maintained at the minimum consistent with efficient safe operation.

h. If the quantity of loaded ammunition or inert items to be spray painted in an outside location does not warrant providing a paint booth, the operation may be performed in the open provided:

(1) The area within 50 feet of the spray paint operation is kept clean and free from extraneous combustible material, air compressors, and paint mixing operations.

(2) At least two class 10BC (or larger) portable fire extinguishers are provided at the spray painting operation.

(3) Personnel are protected from toxic materials by respirators, approved for the amount and type of exposure involved.

(4) Personnel limits are maintained at the minimum required for efficient safe operation.

18–9. Electrostatic paint spraying and detearing of inert items in non-hazardous locations

a. Electrostatic paint spraying and detearing operations will meet the requirements of NFPA Standards or OSHA requirements whichever are more restrictive.

b. Loaded ammunition items will not be electrostatically paint sprayed or deteared.

18–10. Infrared ray drying

a. Infrared drying processes will not be used in the same room in which exposed explosives are present. Special precautions will be taken to ensure that all items from which explosives have been removed by processes such as "steam out" are free of explosives contamination before subjecting them to this process.

b. If sealed items containing explosives are to be subjected to infrared drying processes, prior tests to determine maximum internal temperatures to which explosives will be raised by such rays will be conducted on duplicate sealed containers with inert filler having a thermal conductivity and specific heat similar to that of the explosives. Conveyer speed, time of exposure, and intensity of exposure to infrared rays will be adjusted so that the maximum internal temperatures to which explosives are subjected to do not exceed 170 degrees F. (76.7 degrees C.) during entire period of exposure.

c. Before freshly dipped or painted items (inert or explosive loaded) are processed in infrared drying equipment, they will pass through a predryer. This predryer will be provided with positive mechanical ventilation, constructed of non-combustible materials, and will be provided with automatic sprinkler protection. The air exhausted from the predryer will be discharged to the outside at a point where possibility of re-entry into the building is at a minimum. The predryer need not be heated. The time the article must remain therein will be determined by actual test when using the normal paint mixture. Freshly dipped or painted articles will be predried until at least 85 percent of the volatile

flammable vapors are removed. (In most instances, less than 2 minutes are required when air velocity past the article in the predryer is 300 feet per minute (fpm) and the circulated air temperature is 70 degrees F.)

d. Within 20 feet of the predryer, paint spray booth or dip tank, the electrical equipment will be installed in accordance with NFPA Standard 33.

e. Interlock the drying equipment with the exhaust fan so that the drying equipment cannot function unless the fan and conveyor are operating.

f. Infrared drying equipment will be installed in a large room at least six times as large in unobstructed area as the area of the infrared drying equipment.

g. Adequate ventilation, preferably exhaust ventilation of the predryer will be provided for the room to keep vapor air mixtures at least 25 percent below the lower explosive limit, and also below the health hazard threshold limit values. Periodic tests in the vicinity of the infrared drying equipment will be made with a flammable vapor indicator to ensure low vapor concentrations.

h. The construction of infrared drying equipment will be such that paint dripping from articles will not strike the lamps, reflectors or wiring.

i. The construction and position of the infrared drying equipment and conveyor equipment will be such that contact between articles and bulbs is not possible.

j. Provisions will be made so that items being processed cannot drop off the hooks and lodge in the dryer unnoticed. If the drying equipment is constructed so that falling articles will not pass completely through it, arrangements will be made to automatically stop the conveyor and extinguish the lights concurrently using suitable protective devices.

k. The infrared drying equipment will be screened, or the source of infrared radiation shielded so as to protect workers from prolonged or close exposure to radiation. If screening or shielding is not adequate to protect employees' eyes while working in the vicinity of the drying equipment, safety goggles with Nos. 1–1/2 to 3 shade lens will be worn by those so exposed.

18–11. Drying freshly painted loaded ammunition

a. Ovens in which freshly painted loaded ammunition is dried will comply with the requirements of 29 CFR or NFPA Standard 33, whichever is more restrictive.

b. In addition, the following requirements will be met:

(1) Automatic thermostatic controls will be arranged to stop the application of heat upon reaching a predetermined maximum temperature which will not exceed 170 degrees F. (76.7 degrees C.).

(2) The oven will be equipped with an automatic sprinkler system installed in conformity with the requirements of NFPA Standard 13. Automatic operation of the system may be accomplished by electrical heat-actuated devices provided they are approved for, and are installed in accordance with the requirements of Class I, Division 1, Group D hazardous locations as defined in the NEC.

(3) Heating may be by hot air or other means as long as ammunition or explosives do not come in contact with coils, radiators, or heating elements.

(4) If a conveyor system is employed, provision will be made to shut off the heat supply automatically in the event of power failure to the conveyor.

(5) Electric drying units that are not approved for use in Class I hazardous locations as defined in the NEC will be designed so that the atmosphere in the oven is kept below 25 percent of the lower explosive limit of the mixture of solvent vapors and air.

18–12. Heat sealing equipment

Electric heat sealing machines, used for sealing packages of uncased or exposed explosives, will be separated from all similar or dissimilar operations by an operational shield large enough to limit the effect of an incident originating at the sealing operation to the immediate vicinity. This does not apply for sealing outer packages of cased or unexposed ammunition and explosives. Temperature limits for heat-sealing equipment will be established with a safety factor below the ignition temperature of the explosive, propellants, or pyrotechnics involved. Such sealing equipment will be limited to one machine per operating room, bay, or cubicle.

18–13. Soldering containers

Containers to be soldered will be free from explosives, explosive dust, and flammable vapors. This does not prohibit soldering covers to metal liners containing completely closed ammunition.

18–14. Thread cleaning

a. When thread cleaning is necessary, it will be accomplished by the judicious use of nonferrous "picks." Stainless steel brushes may be used to clean threads of explosive-loaded projectiles providing a fuze seat liner separates the thread cleaning operation from the explosive charge. The operators need not be protected by operation shields; however, thread cleaning operation will be separated from unrelated operations.

b. Power actuated "thread-chasing" tools may be used to clean loaded projectiles when threads are imperfect

because of previously applied Pettman cement or other sealers, provided the operation is performed within a separate cubicle and by remote control. Hand operated "thread-chasing" tools may be utilized provided no explosives are present in the threads.

c. Thread cutting or correcting crossthreads will not be performed on projectiles containing explosives. Straightening of crossthreads is considered thread cutting.

18–15. Inert scrap components and packaging materials

a. All scrap components and packaging materials, other than fired small arms cartridge cases, derived from ammunition and hazardous chemical renovation, P&P, modification and demilitarization operations will be inspected by the activity generating the scrap to detect contamination. All packaging materials will be opened to ensure that no hazardous chemicals or ammunition items are present. Qualified responsible personnel will certify such material to be inert and free of hazardous chemicals and explosives prior to reuse or transfer to the Defense Property Disposal Officer (DPDO) or to an inert storage area.

b. For those items transferred to DPDO, the qualified responsible personnel conducting the inspection of material will submit a certificate of inertness as part of the turn-in document in accordance with the provision of DOD 4160.21–M–1, Chapter II, paragraph D2. Materials generated from ammunition or other hazardous items, even though properly inspected and certified inert, will not be mingled with other types of material, including scrap. The separation of inert projectiles, dummy ammunition rounds and other types of material will be maintained.

18–16. Sand or shotblasting operations

a. Because of possible hazards (resulting from hidden explosives, thin or eroded cases, and certain characteristics of explosive filler), sandblasting or shotblasting is prohibited for items such as thin-cased land mines, shoulder-fired rocket ammunition, fixed rounds of artillery ammunition, and cartridge cases containing propellant. Blast cleaning of solid propellant rocket motors may be accomplished only if the item manager approves in advance.

b. Explosive-filled or chemical-filled ammunition items assembled with tracers, fuzes, or other explosive-loaded components, which are not or cannot be adequately protected from direct contact with the abrasive, will have such components removed prior to blast cleaning. Where explosive-filled and chemical-filled items containing explosives-loaded components such as fuzes are, or can be, protected in a manner to permit blast cleaning, satisfactory safeguards must be installed to prevent rotational velocities and accelerations that will harm or otherwise affect the component parts.

c. In instances where items of ammunition are contained within a structurally suitable outer container, the container, if necessary, may be cleaned by sandblasting or shotblasting.

d. Each explosives or chemical-filled item must be carefully inspected for the presence of exuding explosives, chemical, and/or inert seal material prior to sand or shot blasting. If exudation can be properly removed with the application of approved solvents, such as acetone, the unit may then be returned for sandblast or shot blast cleaning. Solvents shall only be used in well ventilated areas.

e. All metal processing equipment used at the sand or shot blasting operations will be electrically grounded and tested.

f. All operators directly engaged in sand or shot blasting operations will wear personal protective equipment.

g. Approved automatic or semi-automatic sand or shotblasting equipment will be installed where practical. Remote control of equipment, from behind an adequate barrier, is preferred.

h. The quantity of loaded items being sand or shot blasted at one time will be maintained at the minimum consistent with safety and efficiency. The sand or shotblasting equipment location will be separated from the remainder of the operations and personnel by an adequate barrier, dividing wall, or appropriate quantity-distance in a manner to effectively limit the forces of an explosion during the process to the immediate area.

i. Steel wool will not be used for cleaning where possible contact with exposed explosives exists; nonferrous wool will be substituted in these instances.

j. Operations involving the processing of related inert components will not be performed in close proximity to the sand or shotblasting operation involving explosives-filled items. These operations will be accomplished at a location where safety from an explosion can be reasonably ensured. Wherever practical, the independent processing on inert components such as cleaning metal grommets and the like will be accomplished at not less than the appropriate IL separation from the explosive hazard.

18–17. Location of sand or shotblasting operations in explosives storage areas

a. Inhabited building distance will be maintained from an earth covered magazine or open storage site to the point of operation, when the point of operation is other than a permanent or semi-permanent structure. Permanent or semi-permanent structures for such operations will be located at a minimum of IBD from explosives storage locations, based on the larger quantity of explosives involved. Operations located at less than 100 feet from an earth covered magazine or open storage site containing ammunition or explosives are prohibited under any circumstances. Where loading docks

or other outdoor areas are used for sand and shot blast cleaning activity, unrelated concurrent operations will not be conducted in magazines or outdoor storage sites located closer than IL distance.

b. A temporary earth barricade or other suitable protective barrier will be erected around sand or shot blasting operations conducted in the open within an ammunition storage area to protect adjacent personnel and the source of supply of explosive-filled items.

c. Air compressors and motor generator sets used at the operation are not to be located closer than 50 feet from the operational site and from the nearest earth covered magazine or outdoor storage site. If they are gasoline-powered and are to be used for a period long enough to require refueling, they will be located 90 feet away, or midway between earth covered magazines which are separated by 185 feet. Care must be exercised in the selection of the location to preclude exposure of the entrance to the operation or to the earth covered magazine.

d. When it is necessary to use loading docks as operating sites for sand or shot blast cleaning operations, the docks will not be used for normal shipping and receiving activities.

18–18. Sand or shotblasting operations within a building in an operating line

When sand and shot blasting operations are carried on within a building in an operating line, the following safety measures are required in addition to the applicable precautions listed in paragraphs 18–16 and 18–17:

a. The actual sand or shot blasting operation must be separated from all other operations in the building by walls or barriers that are designed to protect all other personnel if an unusual incident occurrs at this location. Opening in these walls or barriers will be limited to the minimum sizes required to facilitate the handling of items to and from the operation. These openings will be arranged in a manner to effectively baffle fragments and prevent projection into adjoining rooms. Openings of the size to allow entry and exit of MHE will not be permitted within the protective walls or barriers unless specially designed to provide resistance to potential explosions equivalent to that provided by the wall. A door opening of sufficient size for use of personnel only may be provided in the protective wall if required. In existing buildings where protection is provided by 12–inch reinforced concrete dividing walls, the walls must extend to the exterior walls of the building. In no event will the height of the concrete wall be lower than the lower rafters of the roof truss. Any opening remaining between the top of the concrete wall and the underside of the roof will be closed on both faces with rigid fire-resistant material securely fastened to the wall and the underside of the roof.

b. Equipment for sand or shot blasting operations will be of the type not requiring operators in the immediate vicinity of the machine to control it. It will be automatically controlled and provided with interlocking switches that will stop the machine if any of its parts fail. Manually controlled stop switches also will be provided at proper intervals to permit prompt stopping of the equipment in event of an accident. When manually operated abrasive equipment is used, "dead man" controls will be provided on the blast nozzle.

18–19. Electrical testing of ammunition and ammunition components

a. Type of test equipment. Electrical (including electronics) test equipment will use the weakest possible power source. Battery-powered equipment will be used in lieu of that with an AC source. The power source will not be capable of initiating the explosive item under test. Where greater power must be used, positive means must be provided to prevent delivery of power to the explosive item, in quantities sufficient to initiate the item. The possibility of error on the part of operators and other personnel must be recognized and safeguards provided.

b. Layout of test equipment. Test equipment will not be placed in hazardous atmospheres unless absolutely necessary. When the test equipment or parts thereof must be placed in hazardous atmospheres, its suitability must be attested by an approved testing facility's approval or specific approval must be obtained from the commander. Unless the test equipment is incapable of initiating the item being tested, operational shields are required to protect personnel. The most reliable means for attaining and retaining this initiation incapability is to protect the test equipment, including leads, from electromagnetic (induction and radiation fields) and electrostatic energy and to provide the test equipment with a weak power source. Where reliance is placed on resistors and other devices for limiting power delivered to the item being tested, operational shields will be provided.

c. Use of test equipment. Test equipment will be used only in the manner and for the purpose for which approval was granted. The equipment will be maintained in good working order by qualified personnel. Operator adjustments must be limited to those required by design of the equipment.

d. Equipment selection. The Army Equipment Data Sheets, Ammunition Peculiar Equipment, TM 43–0001–47, may be used as a guide in selecting equipment for specific operations.

18–20. Profile and alignment gaging operations

a. Each profile and alignment gaging operation, excluding small arms ammunition, will be so enclosed that adjacent operations are protected by operational shields complying with the requirements of paragraph 18–3. The layout of the equipment and operational procedure will be developed with a view toward minimizing personnel injury and property damage in the event of an incident.

b. During chamber gaging of major caliber fixed ammunition, the gate will be pointed toward a dividing wall or other barrier and the round inserted into the gage and removed by the same operator. In no case will the round be left

in the gage. Rounds of mortar ammunition will be gaged prior to attaching propellant increments, and, unless prohibited by design characteristics, prior to assembly of ignition cartridge.

18–21. Collection of explosives dusts

a. Dust collecting systems may be used to aid cleaning, to lessen explosion hazards, and to minimize industrial job incurred poisoning and dermatitis.

b. Examples of high explosives dusts which may be removed by a vacuum system are TNT, tetryl, Explosive D, Composition B and pentolite. A wet collector which moistens the dust close to the point of origin and keeps it wet until the dust is removed for disposal is preferred except for Explosive D which will only be collected in a dry system.

c. More sensitive explosives such as black powder, lead azide, mercury fulminate, tracer, igniter, incendiary compositions, and pyrotechnic materials may be collected by vacuum, provided they are maintained wet with the wetting agent, close to the point of intake. The vacuum (aspirator) systems must be so arranged that the various types of explosives are collected separately or in a manner to avoid mixture of dissimilar hazards; for example, black powder with lead azide. Provision will be made for the proper liberation of gases that may be formed. The use of vacuum systems for collecting these more sensitive materials will be confined to operations involving small quantities of explosives; for example, in operations involving fuzes, detonators, small arms ammunition, and black powder igniters. Potential fire and explosion hazards can be minimized by collecting scrap pyrotechnic, tracer, flare and similar mixtures in number 10 mineral oil. Satisfactory techniques include placing the oil in catch pans and scrap transporting containers at the various operations throughout the plant, and by having individual oil containers serve as collection points for multiple operations. In the latter case, nominal quantities of dry scrap may accumulate at operating locations before they are delivered to collection points and placed in containers of oil. The level of oil will be kept at least 1 inch above the level of any pyrotechnic mixture in the containers. Containers in which scrap explosives and pyrotechnic materials have been collected will be removed from the operating buildings for burning at least once per shift. Where oil is used, fire-fighting equipment satisfactory for class B fires will be available. Carbon dioxide or foam extinguishers are recommended.

18–22. Location of collection chambers

a. Wherever practical, dry type explosives dust collection chambers, except portable units as specifically provided for in paragraph 18–23, will be located outside operating buildings, in the open, or in buildings exclusively set aside for the purpose. To protect operating personnel from an incident involving the collection chamber, a protective barrier must be provided between the operating building and the outside location or separate building where the collection chamber is placed. If the collection chamber contains 25 pounds of explosives or less, the protective barrier may be a 12–inch reinforced concrete wall located a minimum of 8 feet away from the operating building. The collection chamber must be separated from cubicle walls by at least 3 feet. If the collection chamber contains more than 25 pounds of explosives and is separated from the operating building by a 12–inch reinforced concrete wall, the wall must be separated from the operating building by a minimum of IL(U) distance. If the protective barrier meets the requirements of paragraph 18–3 for operational shields (including the required 3–foot distance between the barrier and explosives), for the quantity of explosive in the collection chamber, or if they comply with the requirements of paragraph 18–29 for barricades, the cubicle may be placed at a minimum of IL(B) distance from the operating building. Barricaded and unbarricaded intraline distances will be based on the quantity of explosives in the collection chamber.

b. When it is not practical to locate dry type collection chambers outside the operating building, a separate room within the building may be set aside for the purpose. This room will not contain other operations nor will it be used as a communicating corridor or passageway between other operating locations within the building when explosives are being collected. Walls separating the room from other portions of the operating buildings must meet the requirements of paragraph 18–3 and not more than one collection chamber will be in a single cubicle.

c. Stationary and portable wet type collectors may be placed in the explosives operating bays or cubicles provided the quantity of explosives in the collectors does not exceed 5 pounds. If placed in separate cubicles, the explosives limits for the collectors may be increased to the amount reflecting the capabilities of the cubicle walls as operational shields. For greater quantities, the location requirements set forth in this paragraph are applicable.

18–23. Design and operation of collection systems

a. Collection systems and chambers will be designed to prevent pinching explosives (especially dust or thin layers) between metal parts. Pipes or tubes through which dusts are conveyed will have flanged, welded, or rubber connections. Threaded connections are prohibited. The systems will be designed to minimize accumulation of explosives dusts in parts other than the collection chamber. Accordingly, pipes or ducts through which high explosives are conveyed will have long radius bends with a center line radius at least four times the diameter of ducts or pipes. Short radius bends may be used in systems for propellant powder provided they are stainless steel, with polished interiors. The number of points of application of vacuum will be kept to a minimum. As far as practical, each collection system serving one bay will require a single header leading directly to the collector. A common header serving more than two bays is prohibited. No part of a collection system servicing an operation within a bay or cubicle will expose personnel outside that bay or cubicle. Wet primary collectors are preferred. Not more than two primary collectors (wet or dry)

will be connected to a single secondary collector. If an operation does not create a dust concentration which may produce a severe health hazard, manual operation of the suction hose to remove explosives dusts is preferred to a permanent attachment to the explosive dust producing machine. A permanent attachment increases the likelihood of propagation through a collection system of a detonation occurring at the machine. Interconnection of manually operated hose connections to explosives dust- producing machines will be avoided.

b. Two collection chambers will be installed in series ahead of the pump or exhauster to prevent explosives from entering the vacuum producer in dry vacuum collection systems.

c. Dry portable vacuum collectors will not be located in a bay or cubicle where explosives are present, or in enclosed ramps, but may be positioned outside the buildings or in a separate cubicle having substantial dividing walls for quantities of explosives not exceeding 5 pounds. Wet portable vacuum collectors may be placed in explosives operating bays or cubicles provided the quantity of explosives in the collector is limited in accordance with the requirements of paragraph 18–22. For dry collection of quantities in excess of 5 pounds, or wet collection of quantities in excess of 15 pounds, the further provisions of paragraph 18–22 will apply.

d. The design of wet collectors will provide for proper immersion of explosives, breaking up air bubbles to release airborne particles and removal of moisture from the air before it leaves the collector to prevent moistened particles of explosives from entering the small piping between the collector and the exhauster or pump.

e. Explosives dust will be removed periodically from the collector chamber to eliminate unnecessary and hazardous concentrations of explosives but not less frequently than once every shift. The entire system will be cleaned, dismantling the parts if necessary.

f. Slide valves for vacuum collection systems are permitted. There will be no metal-to-metal contacts with the metal slide. An aluminum slide operating between two ebonite space bars will not constitute a hazard.

18–24. Solid propellant collection

a. Solid propellant being recovered from the fixed rounds that are being pulled apart will be removed from the pull-apart machine as soon as practical. This removal is best accomplished by a properly designed vacuum-type collecting system. Regardless of which type collection system is used, the operations and equipment will be arranged so that the operators and the pull- apart machine are not exposed to more than 15 pounds of solid propellants at any one time. If a vacuum collection system is not used, requirements of e below must be enforced.

b. Vacuum collecting systems for solid propellants will be designed, located, and operated in accordance with the requirements of paragraphs 18–22 and 18–23 and where practical will include wet collection features.

c. The common header connected to a primary collector will not serve, nor be connected to, more than three pull-apart machines. Not more than one header connected to a collector will be operated simultaneously. Additional collecting units will be installed complete for any additional pull-apart machines, limiting each additional collecting system to not more than three machines.

d. Pull-apart machines will be electrically interconnected with vacuum collection systems (piping and collectors) and grounded.

e. When vacuum collecting systems are not installed, the collection of solid propellants may be accomplished by means of a closed tube or chute leading from the pull-apart machine to a collection point located in a separate room or enclosure. This system depends on unimpeded gravity flow. Each tube or chute will be equipped with a properly designed flashback damper to prevent exposure of personnel to flame, toxic gas, and heat in the event of an incident within the collection station. The tubes, troughs, and containers at the collection station will be of nonsparking metal properly cross bonded and electrically grounded. The collection station enclosure or room will be vented directly to the outside (preferably through the roof) to prevent the rupture of the room or enclosures. The total poundage of solid propellants at the collection station will be limited to a minimum amount necessary to fill one container (not over 200 pounds).

18–25. Destruction of solid wastes

Contaminated solid waste material will be taken in closed containers, as soon as practical, to buildings set apart for its treatment or to the burning ground to be destroyed in an appropriate manner.

18–26. Assembly and crimping of complete rounds

Each assembly and crimping machine will be separated from other similar or dissimilar operations by walls or operational shields that are sufficiently strong to retain any fragment that may be produced.

18–27. Rotational speeds for equipment used in field ammunition operations

a. The following rotational speeds will be the maximum permitted for equipment used in ammunition field operations:

(1) Drilling exposed explosives, 75 revolutions per minute.

(2) Cleaning metal parts seated in explosives, such as fuze seat liners in projectiles and bombs, 125 revolutions per minute.

b. The speeds cited above are applied speeds of light feed. Rotational speeds for equipment used in explosives loading are set forth in paragraph 18–28. Higher speeds and rates of feed are permitted for these because of their mechanical tool alignment and speed and feed control features. Stainless steel brushes may be used for cleaning small deposits of explosives from nose threads of separate loading projectiles provided brushes have been proven to be non-sparking and have speeds and feed in accordance with the standards above.

c. Rotational speeds and other safety factors for equipment used in machining explosives in workshops or line operations are contained in paragraph 18–28.

18–28. Machining of explosives

a. Items containing explosives may be drilled either while in a vertical or horizontal position. Vertical drilling is preferred since withdrawal of explosive chips and dust is facilitated and proper drill alignment is more easily attained and maintained.

b. To protect adjacent operators, high explosives will be drilled, faced, milled, sawed, or otherwise machined within rooms or cubicles having reinforced concrete walls except as permitted by paragraph 18–28.

(1) The following high explosives, cased or uncased, may be machined without protection for the operator and without coolant if there is no metal-to-metal contact: Amatol, Octol, TNT, Composition B, Explosive D, and RDX/TNT compositions containing 60 percent or less RDX.

(2) The following high explosives, cased or uncased, may be machined without protection being afforded the operator provided a suitable noncombustible, nontoxic coolant is directed on the tool and explosives at their point of contact: baratols, pentolite (50–50 and 10–90), tetrytol, and cyclotols (Composition B less than 60–40; that is 70–30).

(3) When essential, any other high explosives may be machined by remote control, with the operator projected by a suitable operational shield (para 18–29). Initiating explosives will not be machined if other means (for example, forming) may be used to obtain desired shapes or sizes. If a coolant is used when machining explosives containing aluminum, it must be of a waterless, noncombustible, and nontoxic type.

c. If drilling is being accomplished without protection for the operator, only a single drill will be used and the drill must have a diameter greater than one-fourth inch. Operations involving the use of multiple drills or drills one-fourth inch or less in diameter must be performed by remote control, with the operator protected by an operational shield.

d. Machining of cased explosives is permitted, if the operation requires the tool to remove metal prior to or after contact with the explosives filler, provided it is performed by remote control with the operators protected by operational shields complying with the requirements of paragraph 18–29.

e. Where wet machining is to be performed, positive automatic interlocking devices will be provided to ensure that machining cannot be started until coolant is flowing. These controls also must be capable of stopping the machining if the flow of coolant is interrupted. When it is essential to cut off the flow of coolant to adjust machining tools, positive means must be devised to ensure that, when adjusted, the flow of coolant is restored and all automatic control devices are in operation before machining is permitted to continue. The manipulation of the manual means employed for making the automatic control devices temporarily inoperative will be under the direct control of some assigned, responsible person other than the operator.

f. The lineal and rotational speeds of tools used for the machining of cased or uncased explosives will be maintained at the minimum necessary to safely and efficiently perform the operation. Speeds will not exceed 210 linear fpm or 525 revolutions per minute. So far as practical, machining equipment will be used that is capable of accurately controlling the rate of feed. The above rotational and feed speed rates are for high explosive charge machining. For propellant manufacture, machining rates and methods will be established for individual operations by accepted hazard analysis methods. The rate of feed used will be the lowest consistent with safe and efficient operations, dependent upon the explosive materials being machined. When equipment provided with feed control mechanisms are used for machining high explosives, the rate of feed used will not exceed .035 inch per revolution. Cavities required in explosives preferably will be made with forming tools rather than drills.

g. Pneumatic or hydraulic driven machine tools are preferred for all machining operations on high explosives. Electric tools may be used if the motors, switches, and wiring are of types suitable for the specific hazardous exposure being produced. Control mechanisms for hydraulic or pneumatic equipment will provide positive control of speed selected to prevent tampering by unauthorized personnel. Pressure relief devices will be installed where necessary.

h. Wherever practical, and when forming tools cannot be used, “fly-cutter” type tools and forming cutters will be used for producing cavities in high explosives. When fluted drills must be used, the flutes will extend from the tip of the drill to a point beyond the entry of the drill into the cased or uncased explosives. High explosives will not be drilled to a greater depth than 4 inches unless operation is remotely controlled or the drill is stopped at increments of

depth not greater than 4 inches, withdrawn, and loose explosives removed from the cavity and drill before continuing. When producing cavities in high explosives with a "fly-cutter" type drill, a flow of air will be directed at or near the interior bottom of the cavity to aid in clearing explosives chips and dust through the exhaust systems.

i. In all machining operations on cased or uncased high explosives, tool adjustments will be controlled by positive means to ensure proper depth, diameter and contour of the cut. The positive control measures will include guides, bushings or other alignment aids to prevent contact between moving parts of the machining equipment and metallic parts of the case or holding fixtures. Minor adjustments of machining tools may be made while operations are in progress; however, the total personnel exposure must not exceed that permitted for normal operation. Major repairs, modification, or adjustment of machine equipment will not be undertaken while machining of explosives is in progress.

j. Dull or damaged tools will not be used for machining high explosives. Tools will be made of material which will take and retain a satisfactory cutting edge and be compatible with the explosives being processed.

k. The explosives products resulting from drilling and other machining operations will be removed by an approved exhaust system or by immersion in a stream of water flowing away from the operation. The waste products will be collected at a point outside the operating room or cubicle. Collected waste products will be removed from the operating area at intervals frequent enough to prevent hazardous accumulations. The use of large capacity sumps immediately adjacent to the operating room or cubicle will be discouraged.

l. The quantity of cased or uncased explosives being machined will be the minimum necessary for safe and efficient operation. When the explosives intended for processing are on trays or transfer dollies, the unit being processed must be located as far as is practical from the remaining units awaiting processing.

m. Unless an operational shield is provided to protect operators, not more than two persons will be permitted in a room or cubicle when dry machining of explosives is being accomplished. Where wet machining of explosives is being performed and the work is of a special nature which requires the presence of more than two persons, the number of personnel exposed will not exceed five.

18–29. Operational shields for munitions loading

a. Operational shield for munition loading operations will comply with the requirements of paragraph 18–3.

b. On any equipment used for explosives processing, equipped with doors which function as operational shields, interlocking devices will be installed which will prevent the operator from opening such doors while the equipment is in operation.

Chapter 19
Special storage procedures for waste military munitions

19–1. Scope and applicability

a. The Environmental Protection Agency (EPA) promulgated the Munitions Rule (MR) (40 CFR Part 266 Subpart M) to define when chemical and conventional military munitions become hazardous waste and to provide for the safe storage and transportation of such waste. The MR sets forth two approaches for the storage of waste military munitions: (a) a Conditional Exemption (CE) from certain Resource Conservation and Recovery Act (RCRA) requirements and (b) a new RCRA storage unit standard (i.e., Subpart EE, of 40 CFR Parts 264 and 265).

b. This Chapter establishes additional requirements for storage of waste military munitions.

19–2. Waivers and exemptions

a. CE Storage. Waivers and exemptions from AR 385-64 are not authorized for ammunition and explosives storage facilities (ammunition storage units {ASUs}) storing CE waste military munitions.

b. RCRA Storage. Waivers and exemptions from AR 385-64 will only be available to units storing waste munitions under RCRA unit standards (e.g., Subpart EE of 40 CFR Parts 264 and 265). After 31 December 1999, the ASA(I&E) must approve all such waivers and exemptions, both existing and new. This approval authority may not be delegated.

19–3. Requirements for Storage of Waste Military Munitions under CE

a. Installations and responsible activities storing waste military munitions under CE must comply with 40 CFR 266.205(a). (Note: The MR established CE does not apply to chemical agents or chemical munitions.)

b. MACOMs will ensure that installations and responsible activities:

(1) Maintain records, for a minimum of 3 years from the last day the waste munitions were stored, that describes:

(a) The type of waste military munitions stored by standard nomenclature, Lot Number, Federal Supply Class (FSC), National Stock Number (NSN), Department of Defense Ammunition Code (DODAC), and condition code.

(b) The quantity of each type waste military munitions stored.

(c) The date that each military munitions, by type, was identified as waste.

(d) The last storage date for each, by type, waste military munitions.

(e) The storage location or locations (e.g., building number or storage pad, and grid coordinates) used.

(f) The disposition (e.g., destroyed, demilitarized, shipped) and date of action, by type, of the waste munitions.

(g) When applicable, the sending and receiving sites for those waste military munitions received from or shipped to off-site sources.

(2) Physically separate (e.g., on a separate pallet or shelf) waste military munitions from non-waste military munitions when both are stored in the same ASU.

(3) Clearly mark the segregated waste military munitions to ensure proper identification.

(4) Store waste munitions under CE in ASUs that comply (without waiver or exemption) with the provisions of this DA Pamphlet. Each ASU storing waste military munitions or explosives under CE must be included in a DDESB-approved explosive safety site plan that the installation keeps on file. Those portions of the site plan addressing ASUs storing waste military munitions under CE shall be made available to appropriate Federal or State environmental regulatory authority upon request.

(5) Have SOPs or plans, per paragraph 3-24, which are designed to provide safety, security, and environmental protection. These plans will be coordinated with the appropriate Federal, state, and local emergency response authorities (e.g., law enforcement, fire departments, hospitals, and etc.) and established planning committees.

c. Loss of CE.

(1) The unpermitted or uncontrolled detonation, release, discharge, or migration (e.g., loss, theft, as a result of fire or explosion) of waste military munitions out of any storage unit that might endanger human health or the environment will result in the immediate loss of CE for those waste military munitions. Incidents of this nature and the loss of CE require reporting per paragraph 19-5 below.

(2) The appropriate Federal or State environmental regulatory authorities may withdraw CE based on review or inspection of the installation's or responsible activity's compliance with the requirements for storage of waste military munitions under CE. MACOMs may, at any time, restrict an activity from using CE. In addition, MACOMs, upon discovery of a condition that could warrant loss of CE, will report the condition to the USATCES, HQDA (DCSLOG), and to the commander of the installation or responsible activity. Reports shall contain information as specified in paragraph 19-5 below.

(3) If CE is lost, the waste military munitions are subject to other RCRA hazardous waste regulations. The installation or responsible activities must obtain any required RCRA permits because of the loss of CE.

(4) Installations and responsible activities may apply for reinstatement of CE per 40 CFR 266.205(c).

19–4. Other storage standards

Many States regulate waste management activities, including the storage of waste military munitions. In the event such State regulations conflict with DDESB or Army explosives safety standards, HQDA (ODCSLOG) shall attempt to resolve the conflict. For those issues that cannot be resolved, HQDA (ODCSLOG) shall notify the Chairman, DDESB, through the Army Board member, of any irreconcilable conflict of State law, regulation, or directive with these or other DOD or DA explosives safety standards. The Chairman, DDESB, will review the law, regulation, or directive for any potential impact on explosives safety and will assist the HQDA (ODCSLOG), in coordination with the Deputy Under Secretary of Defense (Environmental Security) (DUSD(ES)), in resolving such regulatory conflicts. Nothing in this paragraph shall affect the Army's right to seek review of the state law, regulation, or directive in a court of competent jurisdiction.

19–5. Reporting

In addition to other applicable reporting requirements (e.g., AR 385-40, 40 CFR 266.205(a)(v)), installations and responsible activities will notify their chain of command, USATCES, the appropriate Federal or State environmental regulatory authority, and established local committees when the installation or responsible activity becomes aware of any unpermitted or uncontrolled detonation, release, discharge, or migration of waste military munitions out of any storage unit (e.g., loss, theft, as a result of fire or explosion) that may endanger human health or the environment.

a. Telephonic notification or, when notifying the chain of command and USATCES, electronic notification (via

email (ES-Hotline@dac-emh2.army.mil) or facsimile (DSN 956-8503 Commercial (918)420-8503) using the format specified in appendix K) will be made within 24 hours.

b. In writing, if the initial report was telephonic, within 5 days. These reports will comply with the requirements of appendix K.

c. Follow-up reports are only required when pertinent information, which was not previously reported, becomes known. Follow-up reports will comply with the requirements of appendix K.

19–6. Closure of facilities storing waste munitions under CE

a. In addition to the explosives safety requirements of paragraph 13-29:

(1) When an ASU that stored waste military munitions under CE is permanently taken out of service for the storage of non-waste and waste military munitions, installations and responsible activities will ensure that such ASUs are appropriately closed.

(2) Installations or responsible activities must notify the appropriate Federal or State environmental regulatory authority in writing at least 45 days before the closure activities begin. Initiation of these closure procedures should occur within 180 days after the date the decision is made to permanently stop using the ASU for the storage of military munitions.

(3) Upon completion of closure activities, a "certification of closure," signed by the installation or responsible activity commander, or other equivalent level authority, and by an independent (i.e., an individual not assigned within the commander's or equivalent-level authority's chain of command) registered professional engineer must be submitted to the appropriate Federal or State environmental regulatory authority within 90 days of completing the closure activities.

(4) The certificate of closure must state, at a minimum, that each of the explosives safety requirements set out in paragraph 13-29 have been met and that waste military munitions and residues are removed in such a manner as to protect the public and the environment consistent with the planned use of the ASU and of the property.

(5) If closure certification cannot be rendered, the installation or responsible activity must contact the appropriate Federal and State environmental regulatory agency to determine the appropriate course of action.

b. Discontinuance of Use for the Storage of Waste Munitions. When an ASU that stored waste military munitions under CE is permanently taken out of service for the storage of waste military munitions but is to continue in service for the storage of non-waste military munitions, installations and responsible activities will ensure that waste military munitions and residues are removed.

19–7. Closure of facilities storing waste military munitions under RCRA

In addition to those explosives safety requirements in paragraph 13-29, closure procedures for those sites operating under existing RCRA permits will follow those closure requirements stipulated in the respective permit.

Appendix A
References

Section I
Required Publications

American National Standard Institute (ANSI) Safety Code A156.3
Building Exits (This publication may be obtained from the American National Standard Institute, 1430 Broadway, ATTN: Sales Dept, New York, NY 10018.) (Cited in para 8-11.)

ANSI Safety Code B9.1
Mechanical Refrigeration (This publication may be obtained from the American National Standard Institute, 1430 Broadway, ATTN: Sales Dept, New York, NY 10018.) (Cited in para 8–22.)

ANSI Safety Standard Z41.1
Men's Safety-Toe Footwear (This publication may be obtained from the American National Standard Institute, 1430 Broadway, ATTN: Sales Dept, New York, NY 10018.) (Cited in para 6–10.)

American Society of Mechanical Engineers (ASME)
Boiler Code (This publication may be obtained from McGraw Hill Book Company, 1221 Avenue of the Americas, New York, NY 10020.)(Cited in para 8–21.)

AR 11–34
The Army Respiratory Protection Program (Cited in para 13–9.)

AR 55–38
Reporting of Transportation Discrepancies in Shipments (Cited in paras 7–12, 7–13, and 7–14.)

AR 55–355
Defense Traffic Management Regulations (Cited in paras 7–1, 7–2, 7–4, 7–7, 7–8, 7–9, and 7–12.)

AR 95–27
Operational Procedures for Aircraft Carrying Hazardous Materials (Cited in para 7–13.)

AR 210–20
Master Planning for Army Installations (Cited in para 8–2.)

AR 385–10
The Army Safety Program (Cited in paras 12–5a and D–1c.)

AR 385–40
Accident Reporting and Records (Cited in paras 2–10 and 13–16.)

AR 385–63
Policies and Procedures for Firing Ammunition for Training, Target Practice, and Combat (Cited in 14–9.)

AR 385–64
U.S. Army Explosives Safety Program (Cited in paras 1–1, 1–3, 1–4, 8–1, 8–3, and 14–1.)

AR 415–15
Military Construction, Army (MCA) (Cited in para 8–2.)

AR 415–20
Project Development and Design Approval (Cited in para 8–2.)

AR 420–90
Fire Protection (Cited in paras 3–1, 3–6, 3–12, 3–20, 7–13, 8–28, and 13–16.)

AR 735–11–2
Reporting of Item and Packaging Discrepancies (Cited in paras 7–12 and 7–14.)

Bureau of Explosives (BOE) Pamphlet 6
Approved Methods for Loading and Bracing Trailers and Less than Carload Shipments of Explosives and other Hazardous Materials (This publication may be obtained from the Association of American Railroads, Bureau of Explosives, 50 F Street, N.W., Washington, DC 20001.) (Cited in paras 7–12 and 16–3.)

BOE Pamphlet 6C
Approved Methods for Loading and Bracing Trailers and Less than Trailerload Shipments of Explosives and Other hazardous materials via Trailer-On-Flat-Car (TOFC) or Container-On-Flat-Car (COFC) (This publication may be obtained from the Association of American Railroads, Bureau of Explosives, 50 F Street, N.W., Washington, DC 20001.) (Cited in paras 7–12 and 16–3.)

DA Pamphlet 75–5
Index of Storage and Outloading Drawings (Cited in paras 7–12, 13–2, 13–5, 13–9, and 13–18.)

DA Pamphlet 385–61
Morning Report (Cited in paras 8–1b(3) and 12–5g.)

FM 55–450–1
Army Helicopter External Load Operations (Cited in para 6–10.)

International Standards Organization (ISO) 284
Conveyor Belts, Electric Conductive, Specifications and method of Test (This publication may be obtained from the American National Standard Institute, 1430 Broadway, ATTN: Sales Dept, New York, NY 10018.) (Cited in para 6–10.)

ISO 1813
Antistatic V-Belts Electric Conductive--Specifications and Method of Test (This publication may be obtained from the American National Standard Institute, 1430 Broadway, ATTN: Sales Dept, New York, NY 10018.) (Cited in para 6–10.)

Mil Handbook 419
Grounding, Bonding, and Shielding for Electronic Equipment and Facilities (This publication may be obtained from the Commanding Officer, Naval Publications and Forms Center, 5801 Tabor Avenue, Philadelphia, PA 19120.) (Cited in para B–4.)

Mil Std 1474
Noise Limits for Military Material This publication may be obtained from the Naval Publications and Forms Center, Standardization Documents Order Desk, Bldg 4D, 700 Robins Avenue, Philadelphia, PA 19111–5094.) (Cited in paras 5–7 and 18–3.)

Mil–T–52932
Truck, Lift, Fork, Internal Combustion Engine, 4000 - 6000 Pound Capacity, General Specification (Cited in para 10–5.)

National Fire Protection Association (NFPA) Standard 13
Installation of Sprinkler System (This publication may be obtained from the National Fire Protection Association, 1 Batterymarch Park, Quincy, MA 02269–91)

NFPA Recommended Practice 13A
Inspection, Testing, and maintenance of Sprinkler Systems (This publication may be obtained from the National Fire Protection Association, 1 Batterymarch Park, Quincy, MA 02269–9101.) (Cited in para 3–20.)

NFPA Recommended Practice 33
Spray Application Using Flammable and Combustible Materials (Cited in paras 1–4, 6–10, 18–8, 18–10, and 18–11.)

NFAP Recommended Practice 77
Static Electricity (Cited in paras 1–4, 6–10, and 18–8.)

NFPA Standard 16
Deluge Foam-Water Sprinkler and Foam-Water Spray Systems (This publication may be obtained from the National Fire Protection Association, 1 Batterymarch Park, Quincy, MA 02269–9101.) (Cited in paras 3–20 and 8–28.)

NFPA Standard 30
Flammable and Combustible Liquids (This publication may be obtained from the National Fire Protection Association, 1 Batterymarch Park, Quincy, MA 02269–9101.) (Cited in paras 3–7 and 5–7.)

NFPA Standard 58
Storage and Handling of Liquefied Petroleum Gases (This publication may be obtained from the National Fire Protection Association, 1 Batterymarch Park, Quincy, MA 02269–9101.) (Cited in para 10–4.)

NFPA Standard 70
National Electrical Code (This publication may be obtained from the National Fire Protection Association, 1 Batterymarch Park, Quincy, MA 02269–9101.) (Cited in para 3–21, 6–1, 6–2, 6–3, 6–5, 6–10, 6–13, 6–14, 8–26, and 10–5.)

NFPA Standard 80
Fire Doors and Windows (This publication may be obtained from the National Fire Protection Association, 1 Batterymarch Park, Quincy, MA 02269–9101.) (Cited in paras 3–11, 8–7, and 8–9.)

NFPA Standard 101
Life Safety Code (This publication may be obtained from the National Fire Protection Association, 1 Batterymarch Park, Quincy, MA 02269–9101.) (Cited in paras 8–9 and 8–11.)

NFPA Standard 505
Powered Industrial Trucks (This publication may be obtained from the National Fire Protection Association, 1 Batterymarch Park, Quincy, MA 02269–9101.) (Cited in paras 10–2 and 10–5.)

NFPA Standard 780
Lightning Protection Code (Cited in paras 1–4, 6–14, 12–6, and D–2.)

NFPA Standard 1123
Outdoor Display of Fire Works (This publication may be obtained from the National Fire Protection Association, 1 Batterymarch Park, Quincy, MA 02269–9101.) (Cited in para 2–12.)

TB Med 502
Occupational and Environmental Health Respiratory Protection Program (Cited in para 13–9.)

TB 9–1300–385
Munitions Restricted of Suspended (Cited in para 7–4.)

TB 43–0142
Safety Inspection of Testing of Lifting Devices (Cited in para 6–10.)

TB 700–4
Decontamination of Facilities and Equipment (Cited in para 13–9.)

Title 29, Code of Federal Regulation
Labor (This publication may be obtained from the Superintendent of Documents, Government Printing Office, Washington, DC 20402.) Cited in paras 3–7, 18–8, and 18–11.)

TM 3–250
Storage, Shipment, Handling, and Disposal of Chemical Agents and Hazardous Chemicals (Cited in para 3–15.)

TM 5–695
Maintenance of Fire Protection Systems (Cited in para 3–20.)

TM 5–803–4
Planning of Army Aviation Facilities (Cited in para 5–10.)

TM 5–811–1
Electric Power Supply and Distribution (Cited in para 12–5.)

TM 5–811–3
Electric Design, Lightning and Static Electricity (Cited in para 12–5.)

TM 5–811–7
Electrical Design, Cathodic Protection (Cited in para 12–5.)

TM 5–1300
Structures to Resist the Effects of Accidental Explosions (Cited in paras 5–4, 5–13, 8–4, 8–8, and 18–2.)

TM 38–250
Preparing Hazardous Material for Military Air Shipment (Cited in para 7–13.)

TM 39–20–11
(C) General Firefighting Guide (U) (Cited in para 3–16.)

Section II
Related Publications

A related publication is a source of additional information. The user does not have to read a related publication to understand this regulation.

ANSI Safety Code A14.3
Construction, Care and Use of Ladders

AR 55–355, Volume 2
Transportation Facility Guide (TGF) Records, U.S. Army Volume 2

AR 75–1
Malfunctions Involving Ammunition and Explosives

AR 75–15
Responsibilities and Procedures for Explosive Ordnance Disposal

AR 190–11
Physical Security of Arms, Ammunition, and Explosives

AR 190–12
Military Police Working Dogs

AR 385–30
Safety Color Code Markings and Signs

AR 385–61
Safety Studies and Reviews of Chemical Agents and Associated Weapon Systems

AR 385–63
Policies and Procedures for Firing Ammunition for Training, Target Practice and Combat

DA Pamphlet 190–12
Military Working Dogs

DA Pamphlet 738–750
Functional Users' Manual for the Army Maintenance Management System

DDESB Technical Paper Number 13
Prediction of Building Debris for Quantity-Distance Siting

DDESB TR 76–1
Detection of Unexploded Ordnance

FM 8–285
Treatment of Chemical Agent Casualties and Conventional Military Chemical Injuries

Mil–F–24385
Fire Extinguishing Agent, Aqueous Film-Forming Foam, (AFFF) Liquid Concentrate, for Fresh and Seawater

Mil Std 398
Shields, Operational for Ammunition Operations, Criteria for Design and Tests for Acceptance

NFPA Standard 90a
Air Conditioning and Ventilating Systems

NFPA Standard 90b
Warm Air Heating and Air Conditioning

NFPA Standard 91
Blower and Exhaust Systems

NFPA 1231
Suburban and Rural Fire Fighting

TB 700–2
Department of Defense Explosives Hazard Classification Procedures

TM 55–607
Loading and Stowage of Military Ammunition and Explosives Aboard Breakbulk Merchant Ships, UNO Recommendations for Transport of Dangerous Goods

U.S Army Corps of Engineers Pamphlet EP 1110–345–2
Index of Design Drawings for Military Construction

Section III
Prescribed Forms

This section contains no entries.

Section IV
Referenced Forms

DA Form 3020–R
Magazine Data Card

DA Form 5383–R
Hot Work Permit

DD Form 626
Motor Vehicle Inspection

DD Form 836
Special Instructions for Motor Vehicle Drivers

DD Form 1391
Military Construction Project Data (LRA)

SF 361
Transportation Discrepancy Report

SF 364
Report of Discrepancy

Appendix B
Earth Electrode Subsystem Test and Inspection

B–1. Introduction

This appendix provides criteria and procedures for conducting both visual inspection and electrical testing of earth electrode subsystems.

B–2. Visual inspection criteria

The earth electrode subsystem will be visually inspected only when or where the subsystem is visible. The earth cover will not be removed from the earth electrode subsystem for the sole purpose of inspection.

a. Components will be in good repair.

b. Components will be free of paint or other nonconductive coating.

c. Components will be free of corrosion. Discoloration of materials is not considered corrosion.

d. Components will be free of breaks, cuts, and damage that will affect equipment integrity.

e. All permanent (welded) and semi-permanent (bolted) bonds are in good condition.

f. Components will be securely fastened to their mounting surfaces and protected against movement and damage.

g. There have not been additions or alterations to the protected facility which would require additional protection or testing.

h. Compression clamps are tight.

B–3. Earth resistivity testing

The resistivity of the earth surrounding the facility should be measured using a four terminal fall-of-potential meter. The reading obtained indicates the average resistivity of the soil in the immediate vicinity of the test area. A resistivity profile of the site requires that the test be repeated at many sample locations over the region being mapped.

a. For small sites, up to 2,500 square feet (232 square meters), make at least one measurement at the center of the site and at each of the four corners of a 50–foot (15 meters) square as shown in Figures B–1 and B–2. Drive a stake or marker at the locations shown. Position the potential and current probes in a straight line with the stake or marker centered between the probes. Make a resistance measurement at each location and calculate the resistivity. Record the resistivity. Take the average of the five readings as the resistivity for the soil at the site. If possible, soil measurements should be made during average or normal weather conditions. Measurements should never be made immediately after a rain or storm.

b. For larger sites, make measurements every 100 to 150 feet (31 to 46 meters), over the site area. Include in the site area the locations of support elements such as transformer banks, towers, engine-generator buildings, and so forth. Choose a sufficient number of test points to indicate the relative uniformity of the soil composition throughout the area. Be particularly alert for the presence of localized areas of very high or very low resistivity soils.

c. A single soil resistivity measurement is made using the four-probe method in the following manner:

(1) At a location near the center of the site, insert the four short probes supplied with the earth resistance test set into the soil in a straight line as illustrated in Figure B–2. A convenient probe spacing of 6 to 9 meters (20 to 30 feet) is recommended as a start. If probes are not supplied with the test set or if they have been lost or misplaced, four metal (steel, copper, or aluminum) rods, 1/4 to 3/8 inch in diameter and 12 to 18 inches in length, may be used. Drill and tap the rod for Nos. 6–32, 8–32, or 10–24 screws, according to rod size and securely fasten the test set leads to the rods. Clamps may also be used for connecting the leads to the probes.

(2) Following the manufacturer's instruction, obtain a resistance reading, R, with the test set.

(3) Convert the probe spacing, A, to centimeters.

(4) Compute resistivity from $p = 6.28RA$ (in ohm-cm). Example: Assume that a resistance of 2 ohms is measured with probe spacings of 20 feet. Convert 20 feet to centimeters: 20 ft. x 30.5 cm/ft. = 610 cm. Calculate resistivity: $p = 6.28 \times 2$ (ohm) x 610 (cm) = 7662 ohm-cm.

B–4. Resistance to earth testing

The calculated resistance of a given earth electrode subsystem is based on a variety of assumptions and approximations that may or may not be met in the final installation. Because of unexpected and uncontrolled conditions which may arise during construction, or develop afterward, the resistance to earth of the installed earth electrode subsystem must be measured to see if the design criteria are met. In an existing facility, the resistance to earth of the earth electrode subsystem must be measured to see if modifications or upgrading is necessary. There is only one test method (the 3–point fall of potential method) that is recognized by the Army. The 3–point fall of potential method involves the

passing of a known current between the electrode under test and a current probe as shown in Figure B–3. The drop in voltage between the earth electrode and the potential electrode located between the current electrodes is then measured. The ratio of the voltage drop to the known current gives a measure of resistance.

a. Probe spacing. Current flow into the earth surrounding an electrode produces shells of equipotential around the electrode. A family of equipotential shells exists around both the electrode under test and the current reference probe. The sphere of influence of these shells is proportional to the size of each respective electrode. The potential probe in Figure B–3 provides an indication of the net voltage developed at the earth's surface by the combined effect of these two families of shells. If the electrode under test and the current reference probe are so close that their equipotential shells overlap, the surface voltage variation as measured by the potential probe will vary as shown in Figure B–4. Since the current flowing between the electrodes is constant for each voltage measurement, the resistance curve will have the same shape as the voltage curve. For close electrode spacings, the continuously varying resistance curve does not permit an accurate determination of resistance to be made. By locating the current reference probe far enough away from the electrode under test to ensure that the families of equipotential shells do not overlap, a voltage curve like that shown in Figure B–4 will be obtained to produce the type of resistance curve shown in Figure B–3. When the distance (D) between the electrode under test and the current reference probe is very large compared to the dimensions of the earth electrode subsystem under test, the latter can be approximated as a hemisphere, and interaction between the two electrodes is negligible. Thus the true value of resistance to earth corresponds to the ratio of the potential difference to the measured current when X is 62 percent of the distance (D) from the electrode under test to the current probe. It is important to remember that (D) is measured from the center of the electrode under test to the center of the current probe and that (D) is large relative to the radius of the electrode under test. Figure B–4 shows an example of data taken with the fall-of-potential method. The correct resistance of 13 ohms corresponds to the potential probe location of 27.4 meters (90 feet) which is 62 percent of the distance to the current probe. For a complete explanation of probe spacing see Military Handbook 419.

b. Meters. Meters for this type of test are manufactured with either three or four terminals. With a four-terminal meter, the P1 and C1 terminals must be interconnected and connected to the earth electrode to be tested. With a three-terminal instrument, connect terminal X to the earth electrode being tested. The earth electrode subsystem will be disconnected when practical. If the earth electrode is directly accessible, connect the C1 P1 terminals or the X terminal of the test meter directly to the earth electrode or interconnecting cable. If the earth electrode is not directly accessible, connect the C1 P1 terminal or X terminal to the lowest portion of the LPS down conductor or a structural ground connection. The driven reference probe C should be driven at the distance (D) from the electrode under test as specified in Table B–1. Potential reference probe P is then driven at a point between the earth electrode under test and probe C as specified in Table B–1. The test leads should then be connected as shown in Figure B–4. Reference probes should be driven to a three-foot depth unless an acceptable reading can be achieved with the reference probes driven to a lesser depth. Operate the test meter in accordance with manufacturer's instructions to obtain the resistance to earth reading. Record the reading.

Table B–1
Test probe C and P distances

Earth Electrode System	Figure #	Probe C distance (D)	Probe P distance
Ground rods			
Single rod		40 meters/131 feet	25 m/82 ft
Multiple rod	6-3	40 meters/131 feet	25 m/82 ft
Ground loop/ counterpoise	6-4	40 meters/131 feet	25 m/82 ft
Grid	6-6	40 meters/131 feet	25 m/82 ft
Radial	6-7	40 meters/131 feet	25 m/82 ft
Plates & cones	6-8	40 meters/131 feet	25 m/82 ft
Navy installed system	6-5	40 meters/131 feet	25 m/82 ft

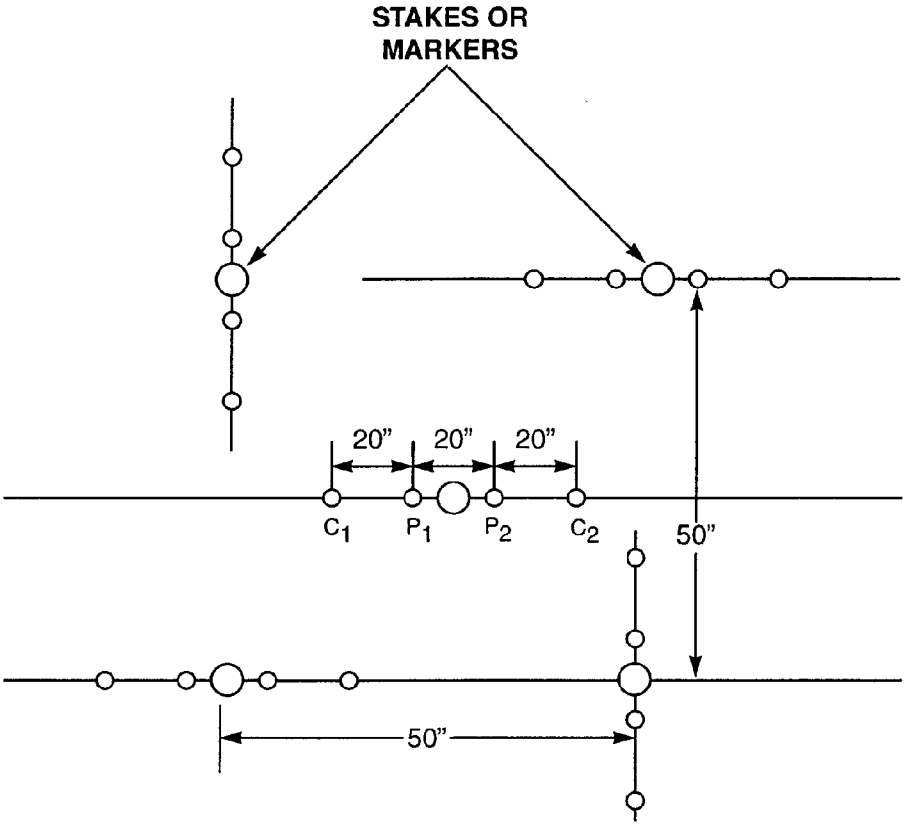

NOTE: NOT DRAWN TO SCALE

Figure B–1. Measurement of soil resistivity

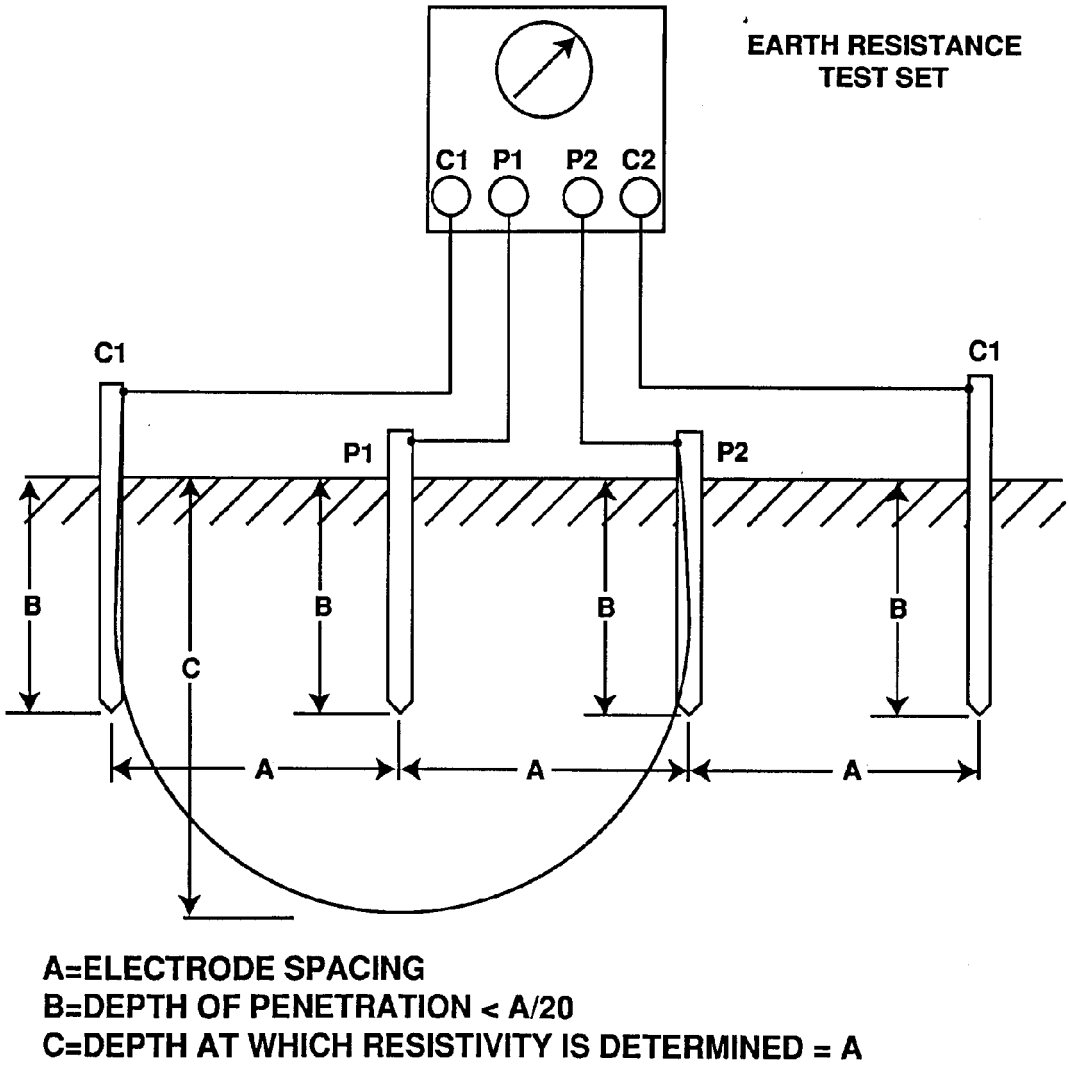

Figure B–2. Resistivity determination of a small site

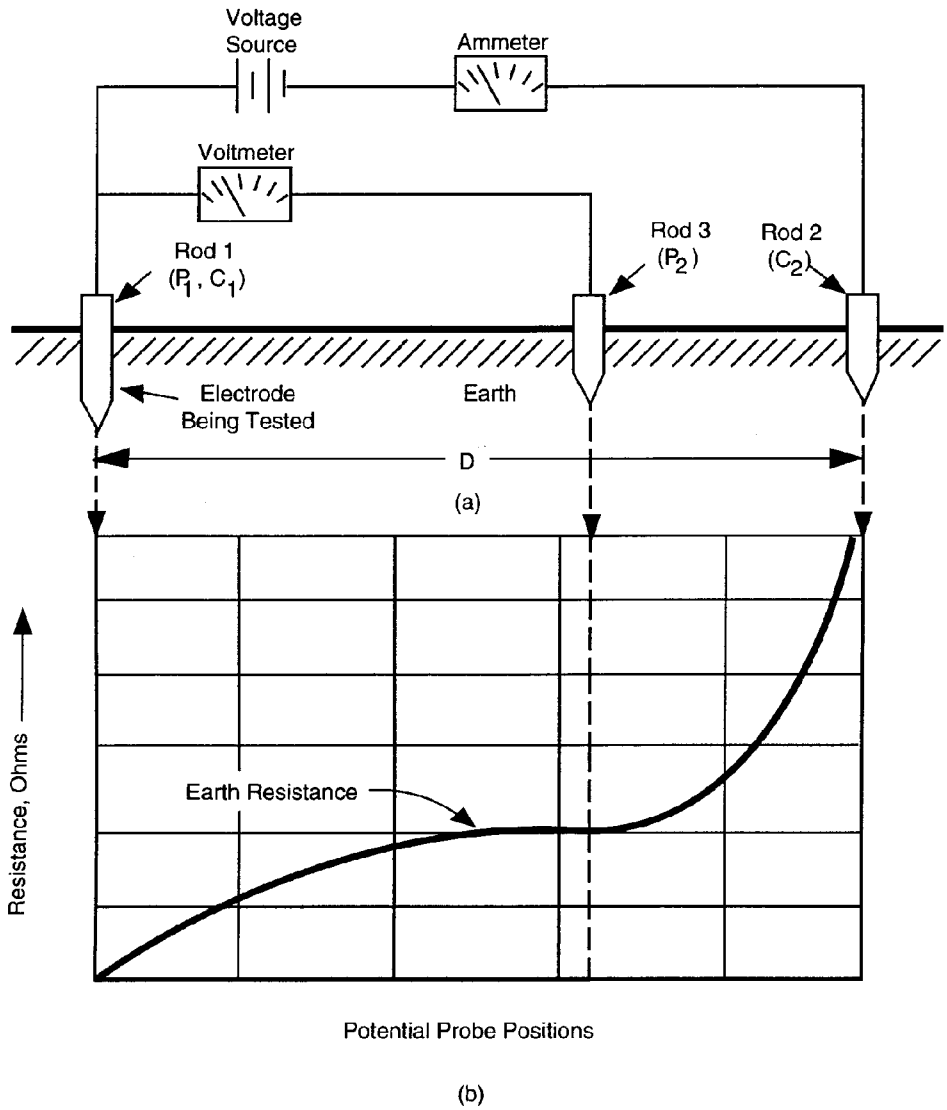

Figure B–3. Fall of potential method for measuring the resistance of earth electrodes

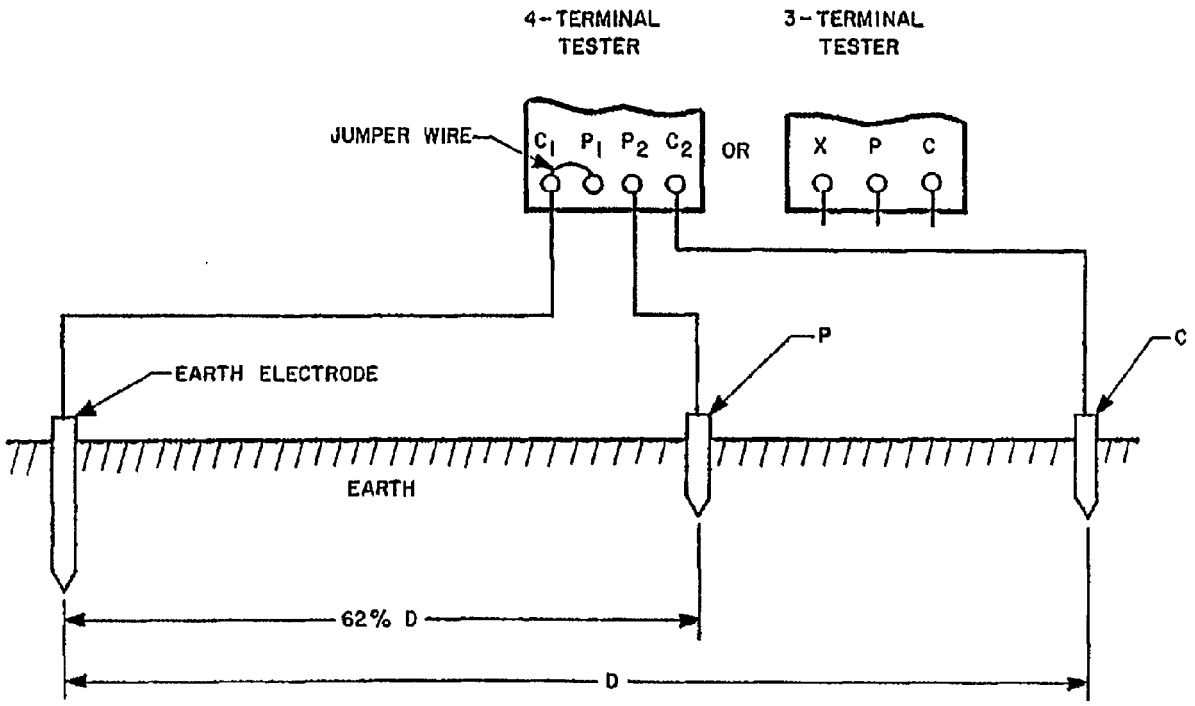

Figure B–4. Fall of potential resistance to earth test

Appendix C
Inspection and Test of Static Electricity Charge Dissipation Subsystem

C–1. Introduction

This appendix provides criteria and procedures for conducting both visual inspection and electrical testing of static electricity charge dissipation systems.

C–2. Visual inspection procedures and criteria

a. Visual inspection procedures and criteria for conductive floors, mats, and runners.

(1) Floors mats and runners will be clean, dry, and free of paint or other nonconductive coating.

(2) Related equipment (metal parts) will be free of corrosion. Discoloration of materials is not considered corrosion.

(3) Floors, mats, and runners will be free of breaks, cuts, and damage that will affect equipment integrity.

(4) Bonding straps will not have more than 50 percent of the wire strands broken.

(5) Components will be in good repair.

(6) Components will not be weakened by vibration.

(7) Components will be securely fastened to their mounting surfaces and protected against movement and damage.

(8) There have not been additions or alterations to the protected equipment which would require additional protection or testing.

b. Visual inspection procedures and criteria for conductive shoes.

(1) Conductive sock liners not separated or removed from conductive plug.

(2) Conductive plugs not depressed below the insole surface.

(3) Conductive soles clean and free of nonconductive materials.

(4) No additions or alterations to the footwear which would negate protective properties of the footwear.

c. Visual inspection procedures and criteria for belt system.

(1) Belts and related equipment will be free of paint or other nonconductive coating.

(2) Related equipment (metal parts) will be free of corrosion. Discoloration of materials is not considered corrosion.

(3) Belts and related equipment will be free of breaks, cuts, and damage that could affect equipment integrity.

(4) Bonding straps will not have more than 50 percent of the wire strands broken.

(5) Components will be in good repair.

(6) Components will not be weakened by vibration.

(7) Components will be securely fastened to their mounting surfaces and protected against movement and damage.

(8) There are no additions or alterations to the protected equipment which would require additional protection or testing.

d. Visual inspection procedures and criteria for legstats and wriststats.

(1) Legstats or wriststats will be free of paint or other nonconductive coating.

(2) Legstats or wriststats will be free of corrosion. Discoloration of materials not considered corrosion.

(3) Legstats or wriststats will be free of breaks, cuts, and damage that shall affect their integrity.

(4) Wriststat bonding straps will not have more than 50 percent of the wire strands broken.

(5) Components of legstats or wriststats will be in good repair.

(6) There are no been additions or alterations to the protected equipment which would require additional protection or testing.

e. Visual inspection procedures and criteria for machinery and equipment.

(1) Mating surfaces of machinery and equipment will be free of paint or other nonconductive coatings.

(2) Machinery and equipment will be free of corrosion. Discoloration of materials is not considered corrosion.

(3) Bonding straps will not have more than 50 percent of the wire strands broken.

(4) Machinery and equipment will be in good repair.

(5) Components of machinery and equipment will be securely fastened to their mounting surfaces and protected against movement and damage.

(6) There are no additions or alterations made to the protected machinery or equipment which would require additional protection or testing.

C–3. Electrical testing of conductive floors and mats

a. Equipment requirements.

(1) Conductive surface resistance will be measured with a calibrated ohmmeter which operates on nominal open circuit output voltage of 500 V dc with short circuit current of 2.5 mA to 5 mA. Nominal internal resistance must not be less than 100,000 ohms.

(2) Accessories required for these tests shall include 2 weighted electrodes. Each electrode shall weigh 5 lbs and have a flat circular contact area 2 1/2 inches in diameter. The contact surface shall be comprised of aluminum or tin foil .0005 inches to .001 inches thick with a backing layer of rubber 1/4 inches thick. The rubber should measure between 40 and 60 durometer hardness as determined with a Shore Type A durometer.

b. Testing procedures (two electrode).

(1) Obtain resistance readings from five different locations on the conductive surface.

(2) When conducting this test, two electrodes are placed 3 feet apart at each of the 5 test points.

(3) Record the readings and compute the average of the five locations.

(4) The average resistance must be more than 25,000 ohms and less than 1,000,000 ohms.

(5) No individual reading shall be less than 10,000 ohms or more than 5,000,000 ohms.

Note. When obtaining resistance measurements, it is recommended that approximately 5 seconds be allowed for meter stabilization before recording reading.

c. Test procedures (one electrode to ground).

(1) Obtain 5 resistance readings to ground. For this test only 1 electrode is placed at each test location on the conductive surface. The meter leads are connected to the electrode and to the ground point.

(2) The average of the 5 values must be greater than 25,000 ohms with no individual reading less than 10,000 ohms. There is no upper limit of resistance when conducting this test.

C–4. Electrical testing of conductive shoes

a. The testing instrument should consist of conductive plates arranged so that the employee stands with only one foot on each plate to complete the circuit. When tests are so made the maximum allowable resistance is 1 million ohms. The test voltage will be no greater than 500 volts. The short circuit current across the electrodes (plates) will not exceed 2.5 milliamperes to 5 milliamperes (0.5 milliamperes is required when the instrument is used with personnel). Positive safeguards must be incorporated into the design of the instruments to eliminate the chance of electric shock to the subject undergoing test. Tests must not be performed in rooms where exposed explosives are present.

b. Shoes will be tested first without cleaning the soles and heels and if the resistance does not exceed required

limits, the shoes may be put in service. If resistance exceeds 450,000 ohms per shoe when testing, they will be cleaned and retested. If readings are then sufficiently low, the shoes may be returned to service. Those with excessive readings will be destroyed. Sandpaper, solvents, or other agents affecting the structure or conductivity of the sole materials will be avoided. Separation or removal of the conductive sock liners from the conductive plug or depression of the conductive plugs below the surface of the insole of the shoe may cause high resistance.

C–5. Electrical testing of conductive conveyor belts

a. The building will be clean and dry. The room will be free of flammable gas mixtures, explosive dust, and explosives.

b. Electrodes will comply with paragraph C–3*a*.

c. Resistance will be measured with a calibrated ohm meter. The meter will operate on a nominal open circuit voltage of 500 volts DC, or a short circuit current of 2.5 to 5 milliamperes, and have an effective internal resistance of 100,000 ohms.

d. Both electrode-to-electrode and electrode-to-earth electrode subsystem measurements will be made at five or more locations on the belt and the results averaged. The average will be below the value specified in table 6–1. When the resistance to the earth electrode subsystem is measured, two measurements will be taken at each of the five test points. The test leads will be interchanged between each of the measurements and the two readings shall be averaged. Electrodes will not be placed closer than three feet from any down conductor or bonding strap (except when space is not available). All readings will be made after the voltage has been allowed to stabilize for 5 seconds. Record the readings.

C–6. Electrical testing of conductive V-belts

a. Requirements of paragraph C–5*a* apply.

b. Requirements of International Standards (ISO) 1813 will be used to test conductive V-belts prior to installation.

c. Requirements of para C–5*c* apply.

C–7. Electrical testing of legstats

a. Legstats will be tested using any meter capable of measuring resistance in the 40,000 to 250,000 ohms range.

b. Each legstat will be tested both off and on the wearer. Use paragraph C–4 for testing procedures.

C–8. Electrical testing of wriststats (see table 6–1)

Wriststats shall be tested in accordance with the publication requiring use of the wriststats.

C–9. Electrical testing of equipment and machinery

a. The requirements in paragraph C–5*a* apply.

b. The meter will be capable of reading 2 ohms.

c. Measurements will be made, as a minimum, at a location closest to the earth electrode subsystem, at a location farthest from the earth electrode subsystem, and at all locations requiring bonding straps. Test electrodes shall not be placed closer than 3 feet from any LPS down conductor or bonding strap that are attached to down conductors (except when space is not available). Record the readings.

C–10. Electrical testing of airfield loading pads

Use appropriate procedures contained in Appendix B.

Appendix D
Inspection and Test of Lightning Protection Subsystems

D–1. General requirements

Lightning protection systems will be visually inspected and tested as specified in table 6–1 for electrical resistance and adequacy of grounding. Any system will be considered deficient if the required resistance value cannot be met. Any system found to be deficient will be repaired. If the deficiency can not be corrected immediately, the lightning protection system test/maintenance/ace personnel shall record the deficiency on the test record and initiate the following actions:

a. Notify the installation safety office. The installation safety office will ensure the following actions are taken.

b. If the deficient system protects an ammunition or explosives storage structure, the custodian of the contents shall be notified.

c. Interim control measures will be developed based on a risk assessment in accordance with AR 385–10. The risk assessment must include consideration of ceasing operations in and around the building and, for storage facilities,

rewarehousing the contents. A decision not to rewarehouse the contents of a storage magazine is justified only when the risk of rewarehousing exceeds the risk associated with the deficient lightning protection system. When use of the facility will continue, maintenance to achieve the required resistance must be accomplished as soon as possible.

D–2. Visual inspection of lightning protection subsystem

Components of the subsystem will be inspected for the following:

a. Subsystem will meet the requirements specified in NFPA 780.

b. Components will not be broken.

c. Components will be in good repair

d. Components will be free of corrosion. Discoloration of materials is not considered corrosion.

e. Components will be free of breaks, cuts, and damage that will affect equipment integrity.

f. Bonding straps will not have more than 50 percent of the wire strands broken and the remaining portion of the strap will meet the minimum strap thickness and width/cross section requirements of table 12–1.

g. Components will not be weakened by vibration.

h. Components will be securely fastened to their mounting surfaces and are protected against accidental mechanical displacement as required.

i. There have not been additions or alterations to the protected facility which would required additional protection or testing.

j. Air terminals will be inspected for evidence of lightning strikes; for example, slight bend, appear melted, or the point may be blunted. In cases where the above evidence is apparent, notify U.S. Army Technical Center for Explosives Safety.

D–3. Electrical testing of lightning protection subsystems

a. Test instruments. Electrical tests consist of measuring the bonding resistance of the lightning protection subsystem components. The instrument must be capable of measuring resistance up to 1 ohm $\pm$10 percent. The manufacturer's instruction manual will be followed to assure proper use of the instrument.

b. The bonding test.

(1) The bonding test (fig D–1) consists of firmly attaching one lead of the ohmmeter to the down conductor where it enters the earth. The earth electrode system will be disconnected when practical. The other lead will then be firmly attached to:

(a) The other down conductor where it enters the earth (Fig D–1).

(b) Each component of the lightning protection subsystem.

(c) Each component of all other subsystems on the facility.

(d) All large metal bodies (a surface area equal or greater than 400 square inches) that are bonded to the lightning protection subsystem.

(2) Read the meter. If the meter reading is one (1) ohm or less the lightning protection subsystem is acceptable. Record the reading. If the meter reading exceeds one ohm, the lightning protection subsystem is not acceptable.

(3) If lightning protection down conductors are not accessible, the air terminal base may be used as an alternate reference test point for the meter test lead. The air terminal selected should be the same one used to do the 3–point fall of potential test which validates the systems's resistance to earth.

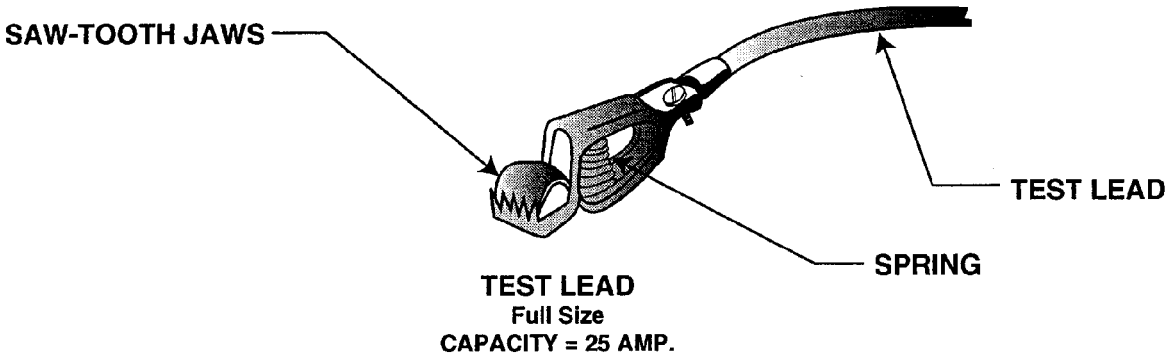

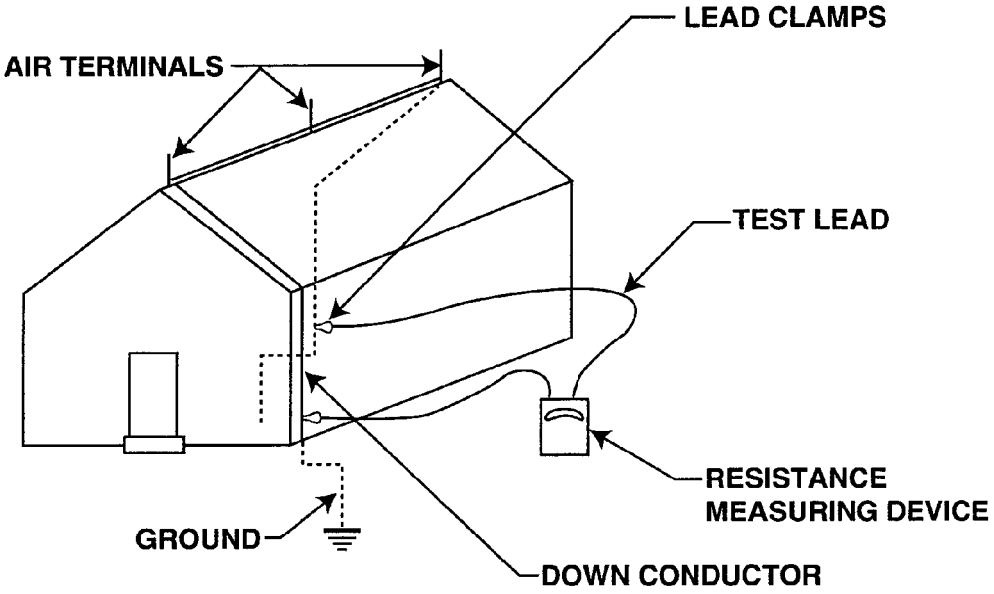

Figure D–1. Testing lightning protection system

Appendix E
Field Expedient Grounding Techniques

E–1. Introduction

This appendix provides field expedient grounding techniques.

E–2. Ground rod technique

a. Drive a 3–foot ground rod into moist earth to a depth of approximately 30 inches.

b. Attach a length of cable (having a resistance value of less than 1 ohm) to the item being worked and the driven ground rod. (Example: When working on propelling charges in the field. Drive the ground rod. Attach one end of the lead to the charge container and the other end to the driven ground rod.)

c. The ground rod will meet the requirements of chapter 6 of this pamphlet.

E–3. The equalization of potential method

This method equalizes the static electricity charge potential between the item and the operator. For this reason the equalization of potential method will be used only when no other method is available. This method consists of the operator touching a mass of bare metal before touching the item being worked. Note: CAUTION: The operator will not touch exposed propellant, electrically sensitive explosives or EEDs.

Appendix F
Safe Conveyor Separation for Ammunition/Explosives

F–1. Safe separation distances.

Safe separation distances are meant for use on conveyor systems at maintenance lines. The distances and precautions given in Table F–1 are sufficient to prevent sympathetic detonation.

F–2. Items Not Listed in Table F–1.

For information on items not listed in Table F–1, consult Commander, Industrial Operations Command.

Table F–1
Safe conveyor spacing

Nomenclature	Model	Distance	Shield/barrier	Notes
Projectile, 155mm	M107	18 inches, center-to-center	Intervening shield of 0.5 inches steel, or 1-inch aluminum	This does not apply to ICM projectiles or the M795
Projectile, 155mm, HERA	M549	5 feet, center-to-center, oriented vertically, side-to-side	None	Loaded projectiles w/o fuze, with lifting plugs
Projectile, 155mm, HERA	M549	3.5 inches, outside edge to outside edge	3-inch diameter aluminum bar with a minimum length equal to the height of the projectiles placed halfway between projectiles, oriented vertically	Loaded projectiles w/o fuze, w/o lifting plugs
Projectile, HE, 8-inch	M509	5 feet center-to-center oriented vertically	V shield	Projectile w/o fuze or expulsion charge, at any stage of grenade loading
Loading rings for grenade, GP (for M483 projectile)	M42/ M46	12 inches, outside edge to edge	None	8 grenade ring pack, Loading rings consist of grenades and metal parts constituting one layer in a projectile
Loading rings for grenade, GP (for M509 projectile)	M42/ M46	12 inches, outside edge to edge	None	15 grenade ring pack, Loading rings consist of grenades and metal parts constituting one layer in a projectile

Table F–1
Safe conveyor spacing—Continued

Nomenclature	Model	Distance	Shield/barrier	Notes
Projectile, 155mm, HE	M795	15 feet center-to-center, oriented side-to-side, vertically	None	Single projectiles with loading funnels, filled with cast explosives
Projectile, 30mm, HEDP	M789	One inch side-to-side	None	Stacks of 2 each PBXN pellets, type 2, 13.5 grams
Projectile, 30mm, HEDP	M789	One inch between assemblies (outside edge to outside edge) oriented side-to-side, vertically	None	Shell body with 2 each, loose PBXN-5 pellets, 27 grams total explosive weight
Projectile, 30mm HEDP	M789	One inch between assemblies (outside edge to outside edge) oriented side-to-side, vertically	None	Loaded body assembly with liner, 0.08 gram PBXN-5 relay charge and steel spacer, at ambient temperature
Projectile, 30 mm, HEDP	M789	3 inches between projectiles (outside edge to outside edge) oriented side-to-side, vertically	None	Heated loaded body assembly with cone temperature of 205 degrees F
Projectile, 30mm, HEDP	M789	3 inches between projectiles (outside edge to outside edge) oriented side-to-side, vertically	None	Fuzed projectile
Cluster tray for grenade, GP	M42/ M46	Zero spacing between trays	Tray is a component for continuous feed conveyor systems used in the load, assembly, and pack of M483 and M509 projectiles.	Tray configuration and material of construction must be identical to that depicted in the 4th Ind DRXOS-ESSP, 29 Sep 81, to letter, DRDARLCM-SP, 7 May 81, subject: Test Results Safe Separation Distance Testing of M42/M46 GP Cluster Tray
Cartridge , 25mm, HEI-T	M792	One inch, center-to-center, between stacks	None	Stack of 3 HEI mix pellets, type I, totaling 10.11 grams: 97/3% RDX/wax (64%), aluminum powder (35%), and graphite and/or calcium sterate (1%)
Cartridge, 25 mm, HEI-T	M792	One half inch, center-to-center	None	HEI mix pellet, type II, containing 1.94 grams: 97/3% RDX/wax (64%), aluminum power (35%), and graphite and /or calcium sterate (1%).
Cartridge, 25mm, HEI-T	M792	2.5 inches, center-to-center, oriented vertically	None	Loaded body assembly, w/o fuze
Cartridge, 25mm, HEI-T	M792	2.5 inches, center-to-center, oriented vertically	None	Fuzed projectile only
Cartridge , 25mm, HEI-T	M792	2.5 inches, center-to-center, oriented vertically	None	Completed round
Cartridge, 105mm, HEAT-T	M456	23 inches, center-to-center, oriented vertically, w/ aluminum bar placed halfway between cartridges; or 15 inches, center-to center, oriented horizontally, side-to-side, w/aluminum bar placed halfway between cartridges	Barrier bars are aluminum, 6061-T6, 3 inch diameter, and of aluminum length equal to that of the cartridges	Complete round

Table F–1
Safe conveyor spacing—Continued

Nomenclature	Model	Distance	Shield/barrier	Notes
Cartridge , 105mm, HEAT-T	M456	23 inches, center-to-center, oriented vertically, w/ aluminu m bar placed halfway between projectiles	Barrier bars are aluminum, 6061-T6, 3-inch diameter, and of aluminum length equal to that of the cartridges.	Projectile only
Cartridge , 105mm, HEAT-T	M456	23 inches, center-to-center, oriented vertically, w/ aluminum bar placed halfway between cartridge cases, and with protective caps on cases or rapid response deluge protection over cartridge cases	Barrier bars are aluminum, 6061-T6, 3-inch diameter, and of aluminum length equal to that of the cartridge case. Protective caps must be fire resistant, and must protect propellant charge from fire brands and radiant thermal effects.	Primed, loaded cartridge cases.
Cartridge , 105mm, HEAT-T	M456	Empty cases may be placed in contact	None	Empty cartridge cases w/M83 primers
Cartridge , 105mm, HE	M1	15 inches nose-to-tail w/ rounds oriented nose-to-tail	None	Fuzed or unfuzed rounds
Rocket, 2.75 inch	M229	15 inches nose-to-tail	None	Complete round using M423 fuzed and MK40 mod 3 motors Warhead loaded with 4.8 lbs of Comp B-4
Rocket, 2.75 inch	M151	15 inches nose-to-tail	None	Complete round using M423 fuze and MK40 motor. Warhead loaded with 2.3 lbs of Comp B-4
Mine, AP	M74	Zero spacing edge-to-edge w/shield described below loaded on the center line and between each mine, 3-inch diameter, 6061-T6 aluminum rod, height of the rod equal to the full height of the mine.	3-inch diamenter, 6061-T6 aluminum rod, height of the road equal to the full height of the mine.	Complete assembly with 1.3 lbs of RDX, two conical shaped charge plates, two cover plates, and center loaded booster
Mine, AP	M74	Zero spacing (edge-to-edge) between the mines and the shield	A rod with a minimum height of 2.6 inches (mine height), 3-inches thick, and a width equal to the conveyor belt.	Complete assembly with 1.3 lbs of RDX, two conical shaped charge plates, two cover plates, and a center loaded booster.
Mine, AT-AV	M75	Zero spaced (edge-to-edge) between the mines and the sheild	A rod with a minimum height of 2.6 inches (mine height), 3 inches thick thick, and a width equal to the conveyor belt	Complete assembly with 1.3 lbs of RDX, two conical shaped charge plates, two cover plates, and a center loaded booster.
Cartridge, 81mm, w/alloy steel projectile	M374	6 inches between items oriented nose-to-tail	None	With or without fuze, and with or without propellant.
Cloud detonator for M130 SLUFAE rocket		4 feet between items center-to-center oriented vertically	None	Steel outer body containing a detonator/ delay element, safety and arming mechanism, and two booster pellets loaded with PBXN-5.
Hand grenade, Fragmentation	M67	12 inches, outside edge to outside edge w/o regard to orientation	None	With or without M213 fuze

Table F–1
Safe conveyor spacing—Continued

Nomenclature	Model	Distance	Shield/barrier	Notes
Rocket, 66mm, HEAT	M72	10 inches between items, placed horizontally at a 20 degree angle to the direction of movement	None	Complete round
Rocket, 66mm, HEAT	M72	10 inches between items, placed horizontally at a 20 degree angle to the direction of movement	None	Warhead only, fuzed or unfuzed
Rocket, 3.5 inch, HEAT	M28A2	14 inches between items, placed horizontally at a 20 degree angle to the direction of movement	None	All up round
Rocket, 3.5 inch, HEAT	M28A2	14 inches between items, placed horizontally at a 20 degree angle to the direction of movement	None	Warhead only, fuzed or unfuzed
Projectile for cartridge, 105mm	M1	22 inches between items, oriented horizontally, nose-to-tail	None	Comp B loaded, without fuze or nose
Projectile for cartridge, 105mm	M1	15 inches between items, oriented horizontally, nose-to-tail	None	Comp B loaded, without fuze, with lifting plug
Cartridge , HEAT-T, 152mm	M409 series	15 feet between projectiles, center-to-center, in a nose down, vertical orientation	None	Complete round
Composition B		20 feet, side-to-side; or 12 feet, side-to-side, when effective means are provided to prevent spread of a fire between buildings via the conveyor	None	60-lb box
TNT		20 feet, side-to-side; or 12 feet, side-to-side, when effective means exist to prevent spread of a fire between buildings via the conveyor	None	55-pound box, carton, or fiber container
Explosive D		15 feet, side-to-side	None	50-pound box or fiber container
Tetryl (bulk)		25 feet, side-to-side	None	50-pound box or fiber container
Pentolite (bulk)		35 feet, side-to-side	None	50-pound box or fiber container
40mm (TNT)		May be placed in contact	None	Projectile only or complete round
57mm (TNT)		6 inches between items	None	Projectile only or complete round
60mm (TNT)		4 inches between items	None	Projectile only or complete round
75mm (TNT)		5 inches between items	None	Projectile only or complete round
76mm (TNT)		5 inches between items	None	Projectile only or complete round
81mm (TNT)	M56	7 inches between items	None	Projectile only or complete round
81mm (Comp B)	M374	8 inches between items, for pearlitic malleable iron (PMI) cartridges. 8 inches between items, oriented vertically, with intervening shield, for steel cartridges	For the steel cartridges, the intervening shields must be 2-inch diameter bars with minimum length equal to the length of the cartridges, and may be of steel or aluminum.	Projectile only or complete round
90mm (TNT)		7 inches between items	None	Projectile only or complete round
Projectile, 105mm (Comp B)	M1	30 feet between pallets, rounds in vertical orientation, 1-inch apart	None	Pallets of projectiles only, without funnels, 16 projectiles per pallet

Table F–1
Safe conveyor spacing—Continued

Nomenclature	Model	Distance	Shield/barrier	Notes
Projectile, 105mm (Comp B)	M1	20 feet between pallets, rounds in vertical orientation, 1-inch apart	Intervening shield of 21 inches by 24 inches, by 0.75 SAE 1020 steel	Pallets of projectiles only, without funnels, 16 projectiles per pallet
Cartridge , 106mm, HEAT	M344	6 inches between items	None	Complete (nose-to-base)
Projectile, 106mm, HEP-T	M346	9 feet between items	None	Projectile
Cartridge , 4.2 inch mortar, HE	M329	21 inches between items	None	Cartridge
Projectile, 175mm (Comp B)		15 feet between items	None	Projectile only
Mine, AT, HE, heavy	M15	25 feet between mines	None	Mine only
Mine, AT, HE, Heavy	M15	25 feet between trays	None	Mine only, 4 mines per tray
Mine, AP, (TNT)	M16	12 inches between mines	None	Mine only
Grenade, hand, fragmentation	M26	12 inches between grenades	None	Fuzed grenade only
Fuze, point detonating	M48A3. M51A5, & M557	3 inches between cans	5/16-inch thick paper non-propagation tubes (NSN 8140-01082-9678; dwg #9328329) will replace the normal plastic bottom support for the fuzes	8 fuzes per M2A1 ammunition can with non-propagation tubes, without can covers, and without nose supports for the fuzes
Fuze, point detonating	M48A3, M51A5, & M557	6 inches, edge-to-edge, in a nose up orientation	None	Fuze only
Burster for 4.2 inch M2A1 cartridge	M14	64 inches between items, oriented end-to-end	None	Bursters from chemical munition projectiles
Burster for projectile, 155mm, M104, M110	M6	8 inches between items, oriented end-to-end	None	Bursters from chemical munition projectiles
Burster for projectile, 105mm, M60	M5	8 inches between items, oriented end-to-end	None	Bursters from chemical munition projectiles
Burster for projectile, 105mm, M360	M40A1	48 inches between items, oriented end-to-end	None	Bursters from chemical munition projectiles
Burster for projectile, 155mm, M121A1	M71	16 feet between items, oriented end-to-end	None	Bursters from chemical munition projectiles
Burster for projectile, 8 inch, M426	M83	24 feet between items, oriented end-to-end	None	Bursters from chemical munition projectiles
Submunition	BLU-97/B	5 feet between pallets with barrier placed halfway between	Airflow barrier	Pallet of 16 submunitions with airflow barrier
Submunition	BLU-97/B	4 feet between pallets with barrier placed halfway between	Solid barrier, 0.5 inch thick by 8 inches high by 16 inches wide, 6061-T6 aluminum plate	Pallet of 16 submunitions with solid barrier
Submunition	BLU-97/B	9 inches, center line-to-center line, with partial height barrier placed between submunitions	Partial barrier, 1.0 inch thick by 6 inches wide by 3.75 inches high, 6061-T6 aluminum plate	Single submunition
Submunition	BLU-97/B	9 inches center line-to-center line, with full height barrier placed between submunitions	Full barrier, 1.0 inch thick by 6 inches wide by 5.1 inches high, 6061-T6 aluminum plate	Single submunition
Grenade, hand, fragmentation, delay	M61	12 inches between grenades regardless of orientation	None	Grenade body is a 2.25 inch diameter consisting of 2 pieces of thin wall sheet steel containing a total of 5.5 oz of Comp B & .3 oz of tetryl pellets
Cartridge , 90mm, APERS-T	M580	7 inches between items, oriented nose-to-tail	None	Complete round

Table F–1
Safe conveyor spacing—Continued

Nomenclature	Model	Distance	Shield/barrier	Notes
Grenade, hand, fragmentation, delay	M33	12 inches between grenades regardless of orientation	None	Grenade body is a 2.5-inch diameter steel sphere, containing 5.5 ounces of Comp B high explosive . Its M213 fuze is equipped with a steel safety pin, but not a safety clip
Grenade, hand, fragmentation, delay	M61	12 inches between grenades regardless of orientation	None	Grenade body is a 2.25 inch diameter consisting of two pieces of thin wall sheet steel and containing a total of 5.5 ounces of Comp B and .3 ounces of tetryl pellets. Its M20A1/M204A2 incorporates a safety clip
Cartridge , 105mm, HE	M1	15 inches between items oriented nose-to-tail	None	Complete cartridge with primer protected
Cartridge , 105mm, HE	M1	15 inches between items oriented nose-to-tail	None	Cartridge without fuze, primer protected
Projectile, 8 inch, HE	M404	42 inches positioned horizontally (nose-to-tail or side-by-side); 48 inches positioned vertically	None	Projectile with lifting plug and loaded with expulsion charge and M43 grenades
Projectile, 155mm, HE	M449	42 inches positioned horizontally (nose-to-tail or side-by-side); 54 inches positioned vertically	None	Projectile with lifting plug and loaded with expulsion charge and M43 grenades
90mm, HEAT (Comp B)	M371A1	7 inches between items, oriented horizontally, nose-to-tail	None	Composition loaded complete cartridge
90mm, HEAT (Comp B)	M371A1	7 inches between items, oriented horizontally, 20 degrees oblique	None	Composition B loaded projectile with M530A1 PIBD fuze
90mm, HEAT (Comp B)	M371A1	7 inches between items, oriented horizontally, 20 degrees oblique	None	Composition B loaded projectile without fuze
90mm HEAT (Comp B)	M431A1	7 inches between items, oriented horizontally, nose-to-tail	None	Composition B loaded complete cartridge
90mm, HEAT (Comp B)	M431A1	7 inches between items, oriented horizontally, 20 degrees oblique	None	Composition B loaded projectile with M509A1 PIBD fuze
90mm, HEAT (Comp B)	M431A1	7 inches between items, oriented horizontally, 20 degrees oblique	None	Composition B loaded projectile without fuze
Projectile, 105mm, HE	M444	24 inches tail-to-tail	None	Horizontal oblique, without fuze, 45 degree angle
Projectile, 105mm, HE	M444	36 inches tail-to-tail	None	Horizontal oblique, without fuze, 45 degree angle
Projectile, 105mm, HE	M444	72 inches tail-to-tail	None	Vertical, without fuze, overhead monorail
Projectile, 155mm, smoke	M116	No separation required between projectiles	None	Horizontal, 30 degree oblique
Projectile, 105mm, illuminating	M314	No separation required between projectiles	None	Horizontal, 45 degree oblique with fuze

Table F–1
Safe conveyor spacing—Continued

Nomenclature	Model	Distance	Shield/barrier	Notes
Projectile, 105mm, illuminating	M314	No separation required between projectiles	None	Horizontal, 45 degree oblique without fuze
Grenade, smoke	M18	6 inches between grenades, fuze-to-base	None	Horizontal, in line with fuze
Grenade, smoke	M18	6 inches between grenades	None	Horizontal, side-by-side without fuze
Warhead, rocket, 5 inch		36 inches tail-to-tail	None	Horizontal, 30 degree oblique, without fuze
Charge, propelling, 155mm	M4	84 inches tail-to-tail	None	Horizontal oblique, 30 degree angle
Projectile, 8 inch, HE	M106	One foot between outside edges with aluminum bar placed halfway between projectiles, oriented vertically	None	Loaded projectile without fuze, lifting plug, supplementary charge and liner
Projectile, 155mm, (Comp B or TNT)	M107	18 inches, center-to-center, placed horizontally with a shield located halfway between projectiles	Intervening shield of 0.5 inches thick steel, or 1 inch thick aluminum. A minimum of 9 inches by 25 inches in frontal diameter	Projectile only M107 type. This does not apply to ICM projectiles or the M795
Warhead	BLU 108/B	17.5 feet from nearest edge of munition on tray to nearest edge of munition on the next tray with a shield between trays	Intervening shield of 1-inch thick aluminum (AL 6061T6 plate). A minimum frontal dimension of 12 inches by 12 inches. Shield may be located as close as 2 feet, 8.5 inches from nearest tray.	4 per tray, vertical, without fuze, with or without funnel
Grenade, 40mm cartridge	M406	6 inches, edge-to-edge	None	Edge-to-edge in the horizontal perpendicular position
Projectile, 8 inch, HE	M106	8 feet edge-to-edge in the vertical in-line orientation	None	
Cartridge , 81mm, illuminating	M301	No separation required in the horizontal coaxial orientation	None	
Cartridge , 4.2 inch illuminating	M335	No separation required in the horizontal coaxial orientation	None	
Cartridge , 81mm	M821	No separation required in the nose-to-tail horizontal coaxial orientation	None	
Cartridge , 81mm	M889	No separation required in the nose-to-tail horizontal coaxial orientation	None	
Cartridge , 90mm, AP-T	M318	No separation required in the horizontal coaxial orientation. The point of the windscreen must not be in contact with the primer of the cartridge in front.	None	
Cartridge, 30mm, TP	M788	Zero (in contact)	None	Horizontal and perpendicular to the conveyor travel.
Cartridge, 90mm, Canister	M336	Zero (in contact)	None	Horizontal coaxial (nose-to-tail)
Cartridge , 20mm, HEI-T-SD	M246	3/4 inch (edge-to-edge)	None	Horizontal and perpendicular
Mine, AP	M18A1	12 1/2 inches (edge-to-edge)	None	Horizontal, front of mine facing up, and side-by-side to each other

Appendix G
Standard designs for explosives facilities

G–1. Drawings approved for new construction

The following drawings are approved for new construction:

a. Earth covered magazines

(1) Reinforced concrete arch - 33–15–74

(2) Semicircular large steel arch - 421–80–01

(3) Semicircular small steel arch - 33–15–65

(4) Steel oval arch - 421–80–03.

b. Other structures

(1) Six bay surveillance facility - 216–12–01

(2) Twelve bay surveillance facility - 216–12–02

(3) Concrete cubicle - 422–15–01

(4) Barricades - 149–30–01

(5) Ammo maintenance building 33–69–09

G–2. Drawings not approved for new construction

Existing buildings constructed using the following drawings are considered to be standard magazines for QD purposes. They are no longer approved for new construction.

a. Earth covered magazines

(1) Mounded concrete - 35–15–06

(2) Stradley - 33–15–61

(3) Steel arch - AW33–15–64

(4) Steel arch - AW33–15–63

(5) Steel arch - 33–15–71

(6) Steel oval arch - 33–15–73

(7) Atomic blast resistant - 33–15–58

(8) Concrete box

(a) USAREUR types I, II, III (330,000 lbs NEW only) - EUR33–15–15

(b) USAREUR types I, II, III - 33–15–16

(9) Camp Darby magazine - 33–15–13

(10) Reinforced concrete arch-type, earth covered magazines - OCE dwg Nos. 652–686 through 652–693

G–3. Navy magazines

The following magazines were constructed according to Navy drawings and are considered standard magazines. They are not approved for new construction.

a. Drawing Nos. 357428 through 347430, 9 August 1944, and modified in accordance with NAVFAC drawing No. 626739, 19 March 1954

b. NAVFAC drawing Nos. 627954 through 627957, 764597, 658384 through 658388; 724368, 751861, 764596, 793746, and 793747.

c. Box-type A magazines constructed according to NAVFAC drawing Nos. 1404000 through 1404007

d. Box-type B magazines constructed according to NAVFAC drawing Nos. 1404018 through 1404025.

e. Box-type C magazines constructed according to NAVFAC drawing Nos. 1404430 through 1404440, dated 20 September 1985.

f. Box-type D magazines constructed according to NAVFAC drawings 1404464 through 1404478, dated 20 September 1985.

g. Box-type E magazines constructed according to NAVFAC drawing Nos. 1404523 through 1404535, dated 23 April 1987.

h. Box-type F magazines constructed according to NAVFAC drawing Nos. 1404541 through 1404555, dated 23 April 1987.

i. Earth-covered, corrugated steel, arch-type magazines at least equivalent in strength to those shown in NAVFAC drawing Nos. 1059128–30, 1059132, 1069906, and 1355460–61.

j. Earth-covered circular composite arch magazine described in NAVFAC drawing Nos. 1404375 through 1404389, dated 31 October 1985

k. Earth-covered oval composite arch magazine described in NAVFAC drawing Nos. 1404390 through 1404398, dated 31 October 1985.

G–4. Nonstandard magazines

The following magazines are considered nonstandard and are limited to 250,000 lbs NEW.

a. Earth-covered magazines if the construction is not equivalent in strength to the requirements of paragraphs G–1 through G–3.

b. Magazines constructed in accordance with NAVFAC drawings Nos. 649602 through 649605, 793748, and 803060.

G–5. Design load for head walls and doors

a. The expected blast load on a head wall and doors of an ES magazine located to the side of a PES at a magazine distance of $1.25W^{1/3}$ is a short duration pulse of 3-Bars (45 psi). The duration of this pulse is about $0.768W^{1/3}$ expressed in milliseconds. This means that a magazine, which is 100 feet from a magazine with 500,000 lbs of HC/D 1.1 with a side-to-side exposure will experience a pulse of 45 psi for about 49 milliseconds.

b. The expected blast load on a head wall and doors of an ES magazine located to the rear of a PES at a magazine distance of $2W^{1/3}$ is a short duration pulse of 7-Bars (100 psi). The duration of this pulse is about $0.768W^{1/3}$ expressed in milliseconds. This means that a magazine, which is 160 feet from a magazine with 500,000 lbs of 1.1 with a front-to-rear exposure will experience a pulse of 100 psi for about 22 milliseconds.

G–6. 7-Bar earth covered magazines

a. Earth covered magazines in the following list (or earth covered magazines that have an equivalent hardness) may be sited as 7-Bar magazines for NEWs up to 500,000 lbs:

(1) Reinforced concrete, arch type, earth covered magazines: Magazines whose construction is at least equivalent in strength to the requirements of the Office of Chief of Engineers (OCE), Department of the Army, drawings 652-686 through 652-693, December 27, 1941, as revised March 14, 1942, 33-15-06, Europe Dist- 33-15-16, 33-15-58 (atomic blast resistant), 33-15-61, and 33-15-74. For new construction use drawing 33-15-74.

(2) Magazines constructed according to Navy drawings 357428 through 357430, August 9, 1944, and modified in accordance with NAVFAC drawing 626739, March 19, 1954; and NAVFAC drawings 627954 through 627957, 764597, 658384 through 658388, 724368, 751861, 764596, 793746. and 793747. For new construction use NAVFAC drawings 1404310 through 1404324, September 12. 1983

(3) Box type A magazines constructed according to NAVFAC drawings 1404000 through 1404007; box type B magazines constructed according to NAVFAC drawings 1404018 through 1404025.

(4) Earth covered, corrugated steel, arch type magazines at least equivalent in strength to those shown on Army OCE drawings numbered AW 33-15-63 (March 5, 1963); AW 33-15-64 (May 10, 1963); 33-15-65 (January 10, 1963); and NAVFAC drawings numbered 1059128-30, 1059132, 1069906, and 1355460-61. Magazines described in Air Force definitive drawings AD 33-15-67R2, AD 33-15-68R2, AD 33-15-69R2 and AD 33-15-70R1 (constructed IAW drawings AW 33-15-63 and AW 33-I5-64). OCE 33-15-73 (oval 1-ga steel arch) and NAVFAC drawing 1404026-14040-34 (oval 1-ga steel arch) are no longer approved for new construction. However, existing magazines axe considered as 7 bar magazines. For new construction of large magazines of this type use the earth covered steel, semi-circular arch magazine design shown on Army OCE drawing number 421-80-01, and for new construction of smaller magazines of this type use OCE drawing number 33-15-65.

(5) Earth covered circular composite arch magazine described in NAVFAC drawings numbers 1404375 through 1404389, October 31, 1985, and the earth covered oval composite arch magazine described in NAVFAC drawing numbers 1404390 through 1404398, October 31, 1985.

b. The following earth covered magazines (or those with equivalent hardness) may be sited as 7-Bar earth covered magazines for NEWs up to 350,000 lbs: NAVFAC box type C, D, E, and F magazines.

G–7. 3-Bar earth covered magazines

Earth covered magazines whose headwalls, which will resist 3-Bars of pressure may be sited in accordance with the appropriate columns in Table 5-5 for NEWs up to 500,000 lbs.

G–8. Undefined earth covered magazines

The following earth covered magazines may be sited as magazines of undefined hardness for NEWs up to 500,000 lbs. Magazines currently sited for 250,000 lbs NEW retain valid sitings and will not be upgraded to 500,000 lbs NEW without the submission of a site plan. Future sitings must reflect the criteria in Tables 5-5 and 5-6.

a. Any earth covered magazine undefined or unknown strength.

b. Magazines constructed in accordance with NAVFAC drawings numbered 649602 through 649605, 793748, and 803060.

Appendix H
The 100–Foot Zone of Protection

H–1. Introduction

This appendix provides the theory and criteria for applying the 100–foot striking arc applicable to LPS requirements for explosives facilities.

H–2. Zone of protection

The zone of protection includes the space not intruded upon by an arc having a radius of 100 feet. This zone is the area beneath the point where the arc contacts earth and rests against an air terminal of an LPS. A zone of protection is also created when the arc rests on the tips of two properly spaced air terminals. All possible placements of the arc must be considered when determining the zone of protection using the 100–foot concept. Figures H–1 through H–4 illustrate these areas of protection.

H–3. Zone of protection for earth covered magazines

When determining the zone of protection for earth covered magazines, the actual earth cover should be considered as part of the structure that requires lightning protection. Figures H–5 through H–7 demonstrate the application of the 100–foot striking zone arc for earth covered magazines.

a. The depicted earth covered magazines have ventilators which extend approximately 3 feet above the earth cover and headwalls which extend approximately 1 foot. The air terminals extend 2 feet above the ventilator and the headwall.

b. Magazines that project above the earth cover may require additional air terminals to provide an adequate zone of protection.

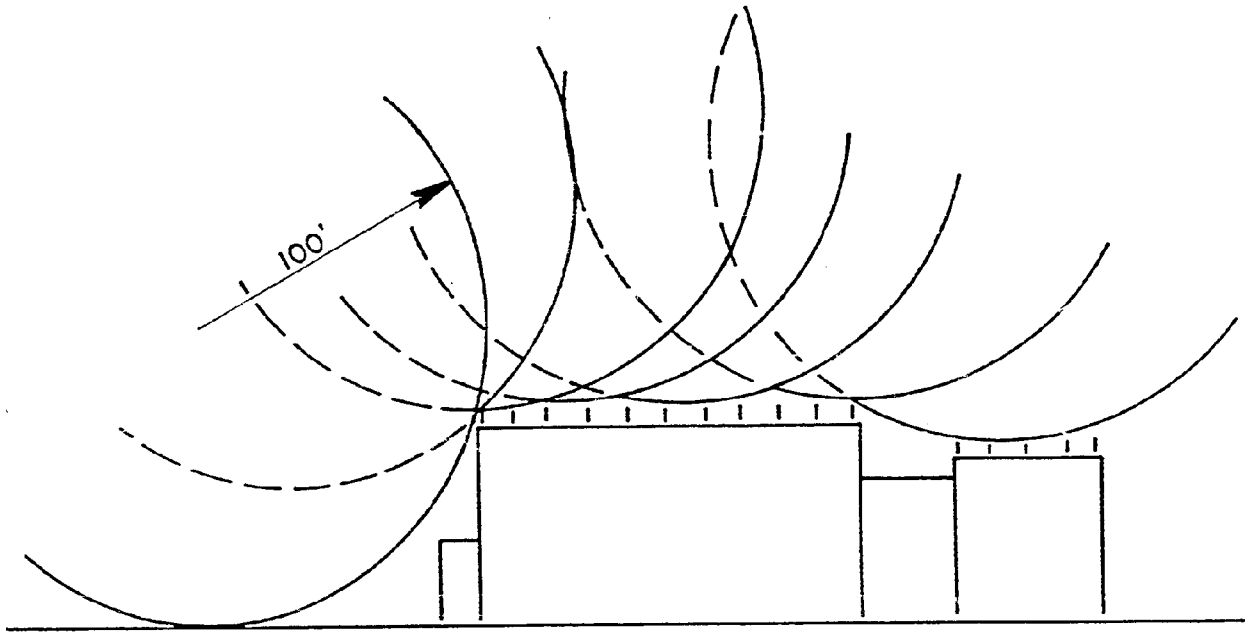

Figure H-1. Zone of protection test

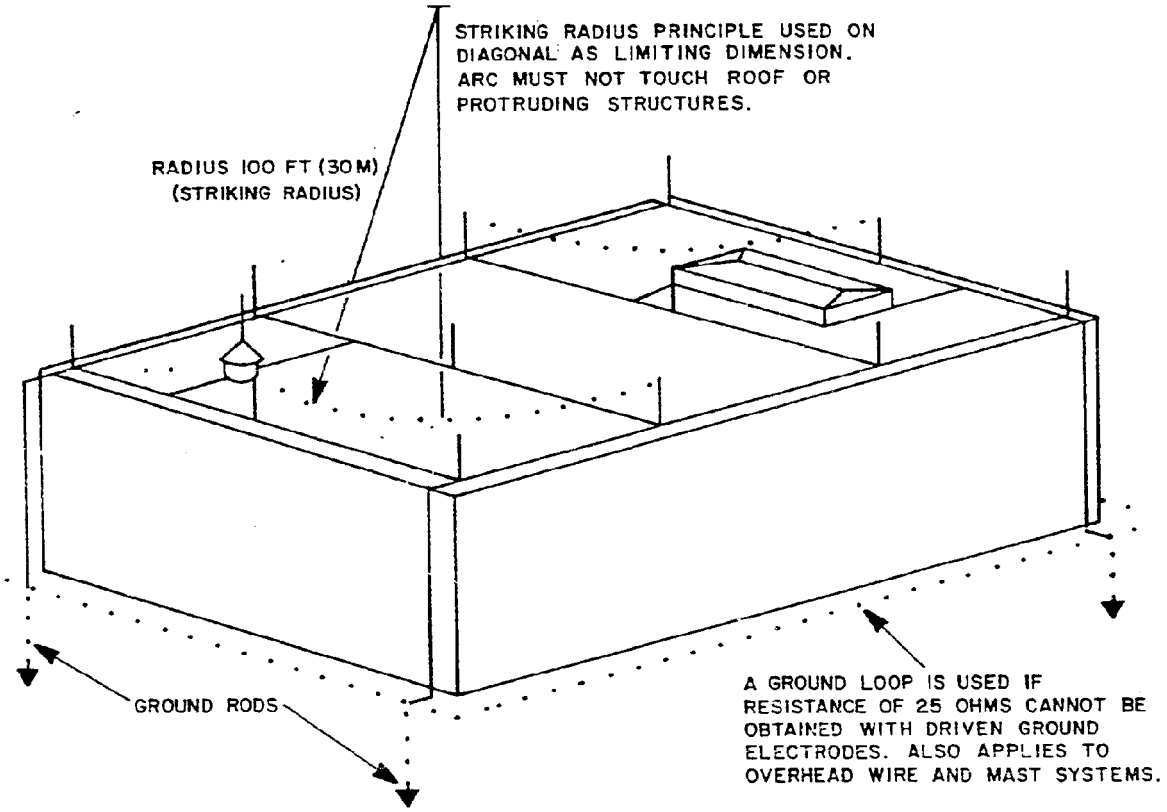

Figure H-2. Zone of protection for integral systems

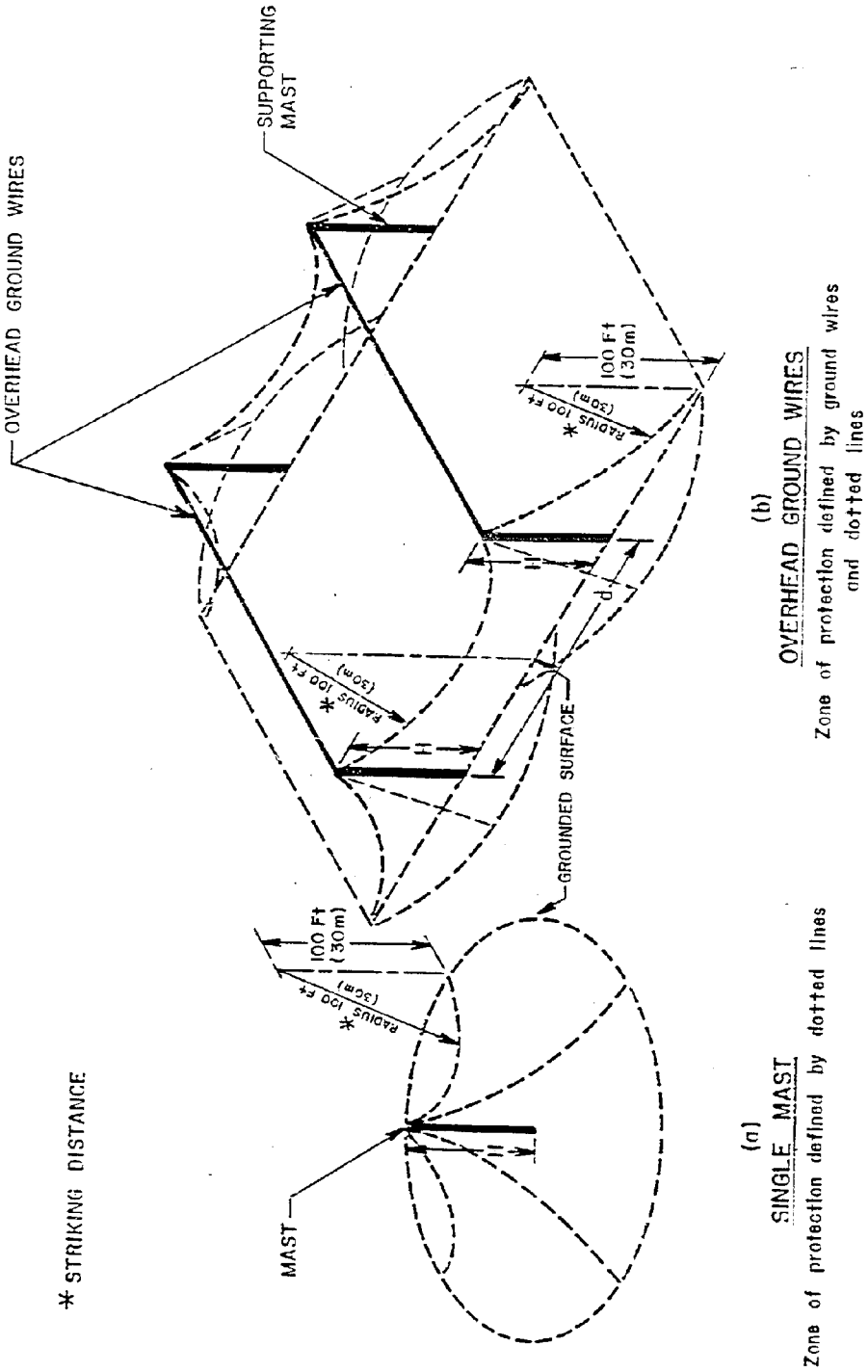

Figure H-3. Illustrated zone of protection

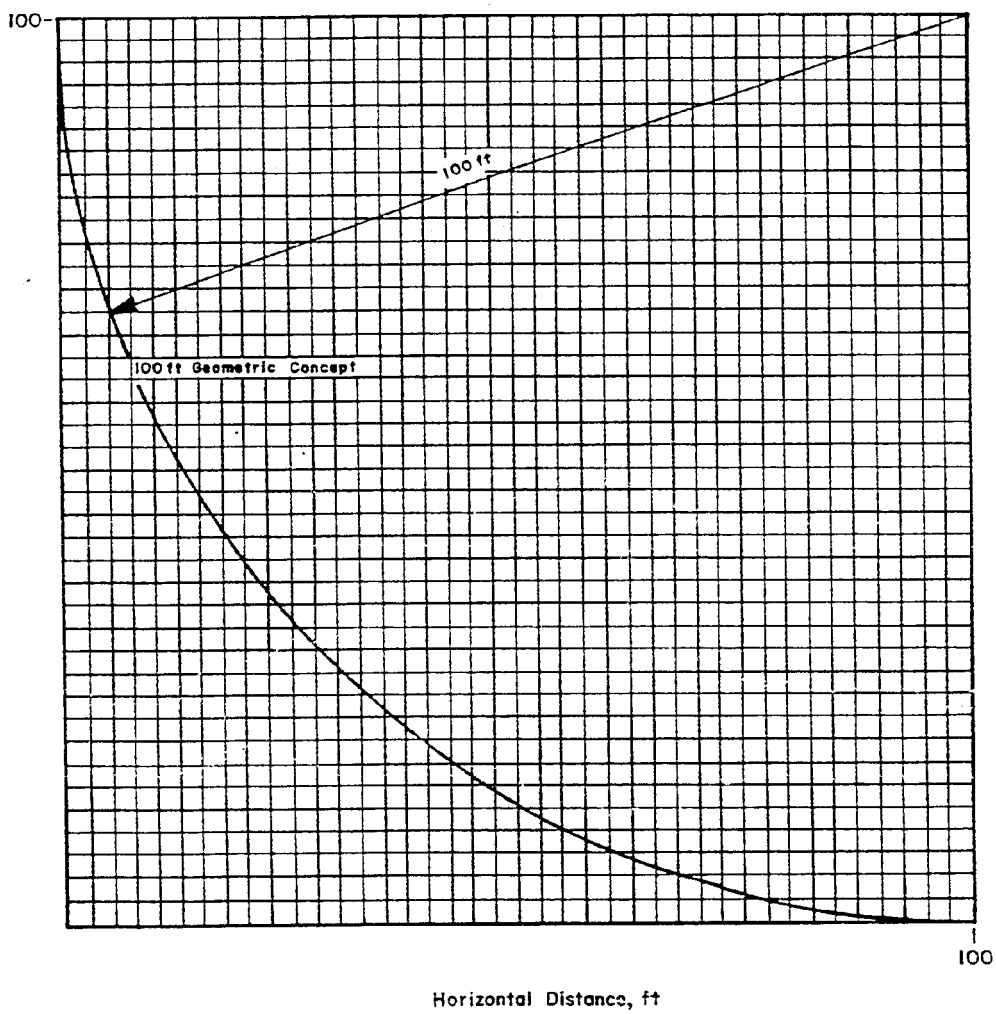

NOTE: The distance may be determined analytically for a 100 ft (30 m) striking distance with the following equation:

$$d = \sqrt{h_1 (200 - h_1)} - \sqrt{h_2 (200 - h_2)}$$

Where: d = horizontal distance, ft
h_1 = height of higher roof, ft
h_2 = height of lower roof, ft

Zone of protection–100 ft (30 m) striking distance.

Figure H-4. Zone of protection geometric concept

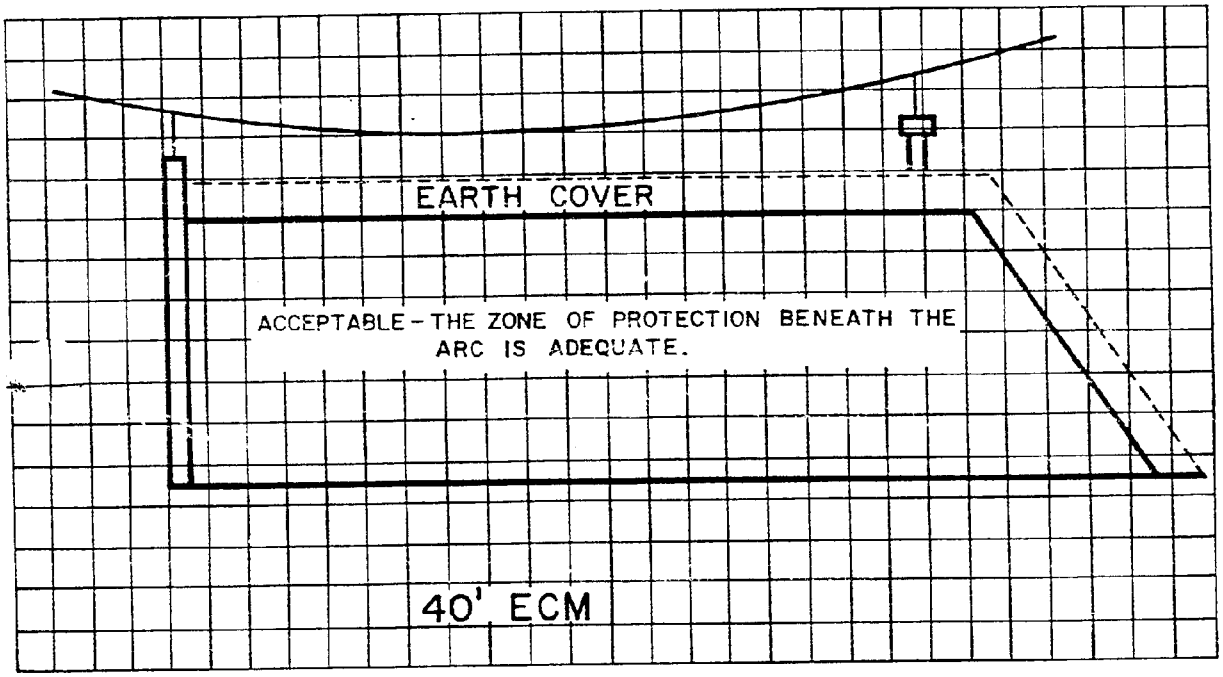

Figure H-5. Adequate protection not penetrating earth cover

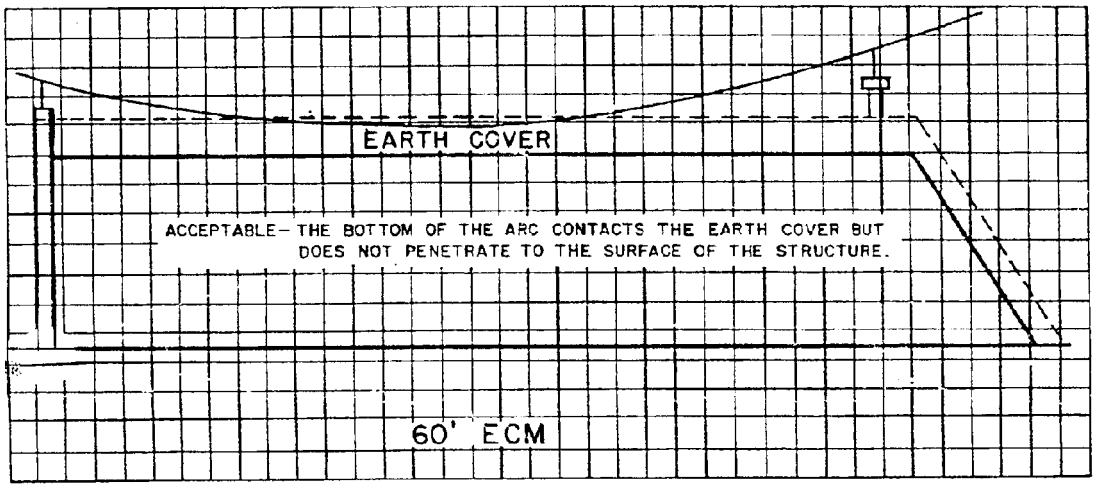

Figure H-6. Adequate protection penetrating earth cover

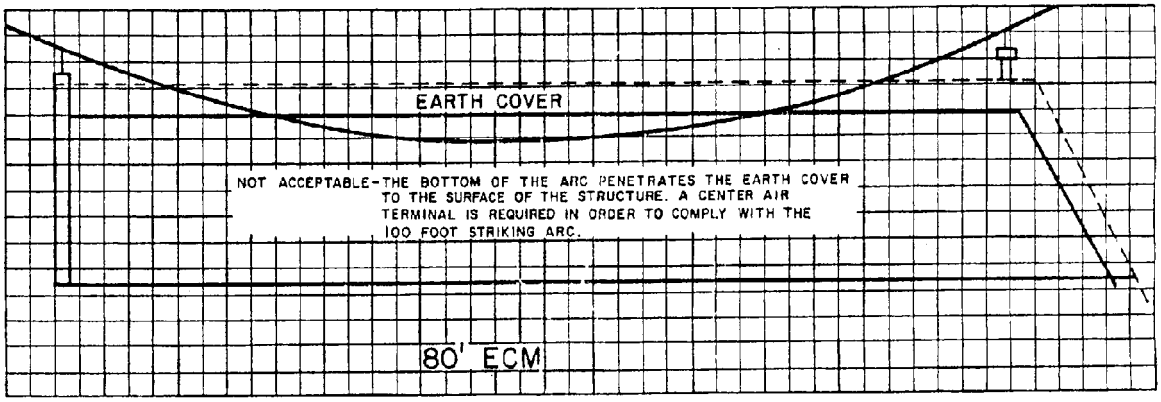

Figure H-7. Inadequate protection penetrating earth cover

Appendix I
Revised Hazard Division 1.2 criteria

I–1. Introduction

On 18 August 1998 the Department of Defense Explosives Safety Board (DDESB) adopted a totally new set of QD standards for HD 1.2 ammunition and explosives. The revised standards are a total departure from the traditional or 'legacy' HD 1.2 standards presented elsewhere in this publication. While either set of standards may currently be used for explosives safety purposes, use of these revised standards exclusively is mandatory after 1 October 2003. It is highly recommended that the following revised standards be applied to all future explosive safety analyses to avoid the need to reevaluate facilities prior to the mandatory implementation date.

I–2. Hazard division 1.2 definitions

a. HD 1.2 are items configured for storage and transportation that do not mass detonate when a single item or package in a stack is initiated. Explosions involving the items result in their burning and exploding progressively with no more than a few at a time reacting. These reactions will project fragments, firebrands, and unexploded items from the explosion site. Blast effects are limited to the immediate vicinity and are not the primary hazard.

b. The Net Explosive Weight (NEW) of an item (used for transportation) is the sum of the weight of the HD 1.1 and 1.3 material contained in an item. The Net Explosive Weight for Quantity Distance (NEWQD) for an item is equal to NEW (NEWQD = NEW) unless testing has been conducted. Based on testing, the NEWQD may include a reduced contribution (less than or equal to 100%) from the HD 1.3 material as a result of the HD 1.1 material being functioned. The NEWQD should be determined by the Single Package Test (UN Test 6 (a) or its equivalent), not the Bonfire Test (UN Test 6 (c)). The NEWQD for a specific item may be obtained from the Joint Hazard Classification System (JHCS).

I–3. Subdivisions of HD 1.2

a. The effects produced by the functioning of HD 1.2 items vary with the size and weight of the items. HD 1.2 ammunition is separated into two sub-divisions in order to account for the differences in magnitude of these effects for purposes of setting quantity-distance criteria. The more hazardous items are referred to as HD 1.2.1 items and have an NEWQD greater than 1.60 pounds. The less hazardous items, referred to hereafter as HD 1.2.2, have an NEWQD less than or equal to 1.60 pounds.

b. It is important not to exaggerate the significance of the value of 1.60 pounds used above. It is based on a break point in the statistical data supporting the quantity-distance relationships and tables and the NEWQD of the rounds tested. If comprehensive data are available for a particular item, then the item may be placed in that category of HD 1.2 supported by the data and allocated the relevant quantity-distances.

c. Unit Risk HD 1.2 is a special storage sub-division (HD 1.2.3) for ammunition that satisfies either of the following sets of criteria:

(1) Ammunition that satisfy the criteria for HD 1.6 with the exception of containing a non-EIDS device, or

(2) Ammunition that does not exhibit any sympathetic detonation response in the stack test (United Nations (UN) Tests 6(b) or 7(g)) or any reaction more severe than burning in the external fire test (UN Test 6(c) or 7(k)), bullet impact test (UN Test 7(j)), and the slow cook-off test (UN Test 7(h)).

I–4. Maximum credible event

The Maximum Credible Event (MCE) is an estimate of the size of the largest detonations expected from a stack of items initiated by fire. Test or analogy best determines it, but items for which no testing has been performed may be assigned a default MCE based on UN Test 6(b) Stack Test procedures. The MCE for a specific item may be obtained from the Joint Hazard Classification System (JHCS).

I–5. Quantity-distance computations

a. The quantity distances specified for HD 1.2 ammunition achieve the desired degree of protection against immediate hazards from an incident. Events involving HD 1.2 items lob large amounts of unexploded rounds, components, and subassemblies, which will remain hazardous after impact. Such items are likely to be more hazardous than in their original state because of possible damage to fuze safety devices or other features by heat and impact. Many types of ammunition contain sub-munitions, which can be projected out to distances as great as the relevant inhabited building distances. Furthermore, it is impractical to specify quantity distances, which allow for the maximum possible flight ranges of propulsive items.

b. Tables I-1A and I-1B and Table I-2 provide the appropriate inhabited building distances (IBD), public traffic route distances (PTR), and intraline distances (ILD) for HD 1.2.1 and HD 1.2.2 ammunition, respectively, when stored

in above ground facilities. Table I-3 provides distance requirements from earthcovered magazine storage as well as intermagazine separation requirements.

c. When HD 1.2.1 items with an MCE greater than 100 pounds are stored in structures which may contribute to the debris hazard, the IBD is determined by applying the larger of the following two distances: the value shown in Table I-1A for the appropriate Explosive Weight (number of items x NEWQD), or that given in Table I-1B for the appropriate MCE.

d. Intermagazine distances (IMD) are dependent upon the types of structures acting as both the Potential Explosion Site (PES) and the Exposed Site (ES). Table I-3 provides a matrix of all the appropriate separations for the various combinations of ES and PES.

e. PTR distances provided in Tables I-1 through I-3 give consideration to the transient nature of the exposure in the same manner as for HD 1.1. PTR distance is computed as 60% of the IBD for items in this hazard division, with a minimum distance equal to the Intermagazine Distance given in Table I-3.

f. ILD given in Tables I-1 through I-3 take into account the progressive nature of explosions involving these items (normally resulting from fire spread), up to the magnitude of the MCE, and the ability to evacuate personnel from endangered areas before the progression involves large numbers of items. Exposed structures may be extensively damaged by projections and delayed propagation of explosions may occur due to the ignition of combustibles by projections. ILD is computed as 36% of the IBD for items of this HD, with a minimum distance equal to the Intermagazine Distances given in Table I-3.

g. When unit Risk HD 1.2 (HD 1.2.3) is stored by itself, IBD is determined using Table 5-16 (HD 1.3 QD) for the for the total NEWQD in the storage location, with a minimum fragment distance based on the HD 1.1 hazardous fragment a real number density criteria applied to a single round of the HD 1.2.3 ammunition. The minimum fragment distance is specified in hundreds of feet in parentheses as "(xx) 1.2.3." PTR for Unit Risk HD 1.2 ammunition is based on 60% of IBD. ILD is computed as 36% of IBD, with a minimum distance equal to the Intermagazine Distance.

I–6. Mixed storage

a. When storing mixed sub-divisions of HD 1.2 ammunition (HD 1.2.1 and HD 1.2.2), the following rule shall apply: Consider each sub-division separately and apply the greater of the two distances. The general mixing rules for HD 1.2 ammunition is given in Table I-4. See paragraph 5-2 for guidance on the storage of HD 1.2 with other HDs.

b. For storage of mixed HD 1.2.3 ammunition, total the NEWQD for all of the HD 1.2.3 items, and use Table 5-16 (HD 1.3 QD) with a minimum fragment distance based on the largest minimum fragment distance for the HD 1.2.3 ammunition in storage. When HD 1.2.3 ammunition is located with any other sub-division of HD 1.2, use the distances given in Table I-4. When HD 1.2.3 ammunition is located with any other HD ammunition, the HD 1.2.3 ammunition is considered HD 1.2 (HD 1.2.1 or HD 1.2.2, according to NEWQD) for quantity-distance purposes. The mixing rules that are provided in paragraph 5-2 then applies to the combination of the hazard divisions.

I–7. Quantity-distance exceptions

a. For reasons of operational necessity, limited quantities of HD 1.2.2 items, not to exceed 50 pounds NEW, may be stored in facilities such as hangars, troop buildings, and manufacturing or operating buildings without regard to quantity distance. Fragmentation shielding will be provided.

b. HD 1.2 ammunition in the current inventory with IBD given in hundreds of feet and presented in parentheses in the format HD (xx)1.2, need not use the quantity-distance criteria specified above. Instead, constant value quantity-distance criteria for these items may be specified as follows: IBD is the distance specified in hundreds of feet (in parentheses); PTR is computed as 60% of IBD; ILD is computed as 36% of IBD, with a minimum distance equal to the Intermagazine Distances given in Table I-3.

Table I–1A
Hazard subdivision 1.2.1 QD for munitions with NEWQD > 1.60 pounds

Explosive weight (lbs)[1]	IBD[2,3,4] (ft)	PTR[5] (ft)	ILD[6] (ft)	Explosive weight (lbs)[1]	IBD[2,3,6] (ft)	PTR[5] (ft)	ILD[6] (ft)
				7,000	1,033	620	372
2	200	200	200	8,000	1,055	633	380
5	200	200	200	9,000	1,074	644	387
10	200	200	200	10,000	1,091	654	393
20	200	200	200	15,000	1,154	693	416
40	200	200	200	20,000	1,199	719	432
60	200	200	200	25,000	1,233	740	444
80	224	200	200	30,000	1,260	756	454
100	268	200	200	40,000	1,303	782	469
150	348	209	200	50,000	1,335	801	481
200	404	242	200	60,000	1,362	817	490
300	481	289	200	70,000	1,384	830	498
400	535	321	200	80,000	1,402	841	505
600	610	366	220	90,000	1,419	851	511
800	662	397	238	100,000	1,434	860	516
1,000	702	421	253	150,000	1,489	894	536
1,500	774	464	279	200,000	1,528	917	550
2,000	824	494	297	250,000	1,558	935	561
2,500	862	517	310	300,000	1,582	949	569
3,000	893	536	322	350,000	1,601	961	577
3,500	919	551	331	400,000	1,619	971	583
4,000	941	565	339	450,000	1,633	980	588
5,000	978	587	352	500,000	1,647	988	593
6,000	1,008	605	363	> 500,000	Note 4	Note 5	Note 6

Notes:
1 - Explosive weight = number of items x NEWQD
2 - IBD = -735.186 + [237.559 x (ln (Number of items x NEWQD))] – [4.274 x (ln(Number of items x NEWQD))^2], IBD in feet, NEWQD in pounds, ln is natural logarithm
3 - Number of items x NEWQD = exp[27.791 – (600.392 – 0.234 x IBD)$^{1/2}$], IBD in feet, NEWQD in pounds, exp(x) is e^x
4 - Use of equations given in Notes (2) and (3) to determine other IBD-weight combinations is allowed
5 - PTR = 60% of IBD with a minimum distance equal to the Intermagazine Distance
6 - ILD = 36% of IBD with a minimum distance equal to the Intermagazine Distance

General comments:
a - The quantity-distance criteria for HD 1.2.1 items are based on the hazards from primary fragments. When stored in structures which may contribute to the debris hazard (secondary fragments), the IBD for items whose MCE is greater than 100 pounds is determined by using the larger of the following two distances: those given in this table for the appropriate Explosive Weight or those given in Table I-1B for the appropriate MCE. Structures that may contribute to the debris hazard for storage of HD 1.2.1 ammunition include: (a) all earth-covered magazines (ECMs) – Frontal exposure only. Side and rear exposures have fixed minimum distances for IBD; (b) all aboveground sites (AGSs)—Including heavy wall (H), heavy wall/roof (H/R), and light wall (L) as defined in Table I-3, unless data/analyses are provided to show that the structural debris do not contribute.
b - See Table I-3 for ILD, PTR, and IBD for Earth-Covered Magazines

Table I–1B
Minimum fragment distances for HD 1.2.1 items stored in structures, which can contribute to the debris hazard

MCE (lbs)	Minimum fragment distance [1,2] (ft)
>100	670
125	744
150	815
175	875
200	927
225	973
250	1,014
275	1,051
300	1,085
325	1,116
350	1,145
375	1,172
400	1,197
425	1,220
450	1,243
> 450	1,250

Notes:
1 - Minimum fragment distance = -1133.9 + [389 x ln (MCE)]; MCE in pounds, minimum fragment distance in feet with a minimum of 670 feet; ln is natural logarithm
2 - Use of equation given in Note (1) to determine minimum fragment distance for other MCEs is allowed

General comments
a - The quantity-distance criteria for HD 1.2.1 items are based on the hazards from primary fragments. When stored in structures which may contribute to the debris hazard (secondary fragments), the IBD for items whose MCE is greater than 100 pounds is determined by using the larger of the following two distances: those given in Table 9.6A for the appropriate Explosive Weight or those given in this table for the appropriate MCE. Structures that may contribute to the debris hazard for storage of HD 1.2.1 ammunition include: (1) all earth-covered magazines (ECMs) – Frontal exposure only. Side and rear exposures have fixed minimum distances for IBD; (2) all aboveground sites (AGSs)—Including heavy wall (H), heavy wall/roof (H/R), and light wall (L) as defined in Table 9-8, unless data/analyses are provided to show that the structural debris do not contribute.
b - See Table 9.8 for ILD, PTR, and IBD for Earth-Covered Magazines

Table I–2
Hazard subdivision 1.2.2 Quantity-Distances (IBD, PTR, and ILD) for munitions with NEWQD ≤ 1.60 pounds

Explosive weight (lbs) [1]	IBD[2,3,4] (ft)	PTR[5] (ft)	ILD[5] (ft)	Explosive weight (lbs) [1]	IBD[2,3,4] (ft)	PTR[5] (ft)	ILD[6] (ft)
1	100	100	100	7,000	366	220	132
2	100	100	100	8,000	376	226	135
5	100	100	100	9,000	385	231	139
10	100	100	100	10,000	394	236	142
20	100	100	100	15,000	427	256	154
40	113	100	100	20,000	451	271	162
60	123	100	100	25,000	471	282	169
80	131	100	100	30,000	487	292	175
100	138	100	100	40,000	514	308	185
150	152	100	100	50,000	535	321	193
200	162	100	100	60,000	553	332	199
300	179	107	100	70,000	568	341	204
400	192	115	100	80,000	581	349	209
600	211	127	100	90,000	593	356	214
800	226	136	100	100,000	604	362	217
1,000	238	143	100	150,000	647	388	233
1,500	262	157	100	200,000	647	407	244
2,000	279	168	101	250,000	678	422	253
2,500	294	176	106	300,000	703	434	260
3,000	306	183	110	350,000	723	445	267
3,500	316	190	114	400,000	757	454	272
4,000	325	195	117	450,000	771	462	277
5,000	341	205	123	500,000	783	470	282
6,000	355	213	128	> 500,000	Note 3	Note 4	Note 5

Notes:

1 - Explosive weight = number of items x NEWQD

2 - IBD = 101.649 - [15.934 x (ln(number of items x NEWQD))] + [5.173 x ln(number of items x NEWQD))^2] IBD in feet, NEWQD in pounds, ln is natural logarithm

(3) Number of items X NEWQD = exp [1.5401 + (-17.278 + 0.1933 X IBD)$^{1/2}$] IBD in feet, NEWQD in pounds, exp(x) is e^x

(4) Use of equations given in Notes (2) and (3) to determine other IBD-weight combinations is allowed.

(5) PTR = 60% of IBD with a minimum distance equal to the Intermagazine Distance.

(6) ILD = 36% of IBD with a minimum distance equal to the Intermagazine Distance.

General comments

a - The QD criteria for HD 1.2.2 items are based on the hazards from primary fragments.

b - See Table I-3 for earth-covered magazine QD requirements

Table I–3
Summary of hazard subdivisions 1.2.1, 1.2.2, and 1.2.3 quantity-distances (NOTE: all distances shown are in feet)

To EXPOSED SITE (ES)		From POTENTIAL EXPLOSION SITE				
		ECM		AGS		
		S or R	F	(H)	(H/R)	(L)
ECM (7-Bar/3-Bar) (IMD)	S	0 (Note 1)	0 (Note 1)	0 (Note 1)	0 (Note 1)	0 (Note 1)
	R	0 (Note 1)	0 (Note 1)	0 (Note 1)	0 (Note 1)	0 (Note 1)
	FU	0 (Note 1)	0 (Note 1)	0 (Note 1)	0 (Note 1)	0 (Note 1)
	FB	0 (Note 1)	0 (Note 1)	0 (Note 1)	0 (Note 1)	0 (Note 1)
ECM (Undefined) (IMD)	S	0 (Note 1)	0 (Note 1)	0 (Note 1)	0 (Note 1)	0 (Note 1)
	R	0 (Note 1)	0 (Note 1)	0 (Note 1)	0 (Note 1)	0 (Note 1)
	FU	0 (Note 1)	200/300/100	200/300/100	200/300/100	200/300/100
	FB	0 (Note 1)	0 (Note 1)	0 (Note 1)	0 (Note 1)	0 (Note 1)
AGS (H/R) IMD	U or B	0 (Note 1)	0 (Note 1)	0 (Note 1)	0 (Note 1)	0 (Note 1)
AGS (H or L) IMD	U or B	0 (Note 1)	200/300/100	200/300/100	0 (Note 1)	200/300/100
ILD		0 (Note 1)	Note 2	0 (Note 1)	0 (Note 1)	Note 2
PTR		200/300/100	Note 3	Note 3	Note 3	Note 3
IBD		200/300/100	Note 4	Note 4	Note 4	Note 4

Legend
S – Side R – Rear F – Front B – Barricaded
U – Unbarricaded FU – Front Unbarricaded FB – Front Barricaded
ECM – Earth-Covered Magazine (7-Bar, 3-Bar, Undefined refers to strength of headwall)
AGS – Aboveground Site; aboveground, non earth-covered magazine, structure or pad
AGS (H) – Buildings with wall thickness > 12 inches of reinforced concrete (18.7 inches brick); as an ES, door is barricaded if it faces a PES
AGS (H/R) – AGS (H) with roof thickness > 5.9 inches of reinforced concrete; as an ES, door is barricaded if it faces a PES
AGS (L) – Light structure, open stack, truck, trailer, or railcar
IMD – Intermagazine Distance ILD – Intraline Distance;
IBD – Inhabited Building Distance PTR – Public Traffic Route Distance

Notes
1 - Practical considerations such as firefighting and security will dictate specific separation distances. A minimum of 20 feet is desirable to allow circumnavigation by security patrols.
2 - ILD = 36% of IBD with a minimum distance equal to the Intermagazine Distance.
3 - PTR = 60% of IBD with a minimum distance equal to the Intermagazine Distance.
4 - Use Tables I-1A, I-1B, and I-2

General comments
a - Where three distances are given, the first refers to HD 1.2.1 items with an MCE less than or equal to 100 pounds, the second to HD 1.2.1 items with an MCE greater than100 pounds, and the third refers to HD 1.2.2 items
b - All IM distances for HD 1.2.3 items at the ES are 0 (Note 1)

Table I–4
Hazard subdivision 1.2.1, 1.2.2, and 1.2.3 mixing rules

HAZARD SUB-DIVISION INVOLVED	DISTANCES TO BE APPLIED
1.2.1	Apply HD 1.2.1 Distances
1.2.2	Apply HD 1.2.2 Distances
1.2.3	Apply HD 1.2.3 Distances
1.2.1 + 1.2.2	Apply greater of two distances
1.2.1 + 1.2.3	Apply greater of two distances
1.2.2 + 1.2.3	Apply greater of two distances

Appendix J
Explosives Safety Program Management

J–1. Explosives safety programs

a. In accordance with AR 385-64, MACOMs will develop, implement, and manage a written explosives safety program as an element of their overall safety and occupational health program. In addition, units at and above the battalion level whose mission and functions involve ammunition and explosives will develop, implement, and manage a written explosives safety program as an element of their overall safety and occupational health program. Explosives safety programs will address the safety of explosives during production, transportation, storage, handling, use, inspection, testing, maintenance, demilitarization, and disposal.

b. Explosives safety programs shall prescribe requirements, responsibilities, and procedures for complying with AR 385-64 and this pamphlet, including the following (as applicable):

(1) Explosive safety program oversight, management, coordination, and evaluation.

(2) Technical support requirements from Quality Assurance Specialist (Ammunition Surveillance) (QASAS) personnel.

(3) Explosives safety training.

(4) Explosives safety surveys and inspections to determine compliance with AR 385-64 and this pamphlet.

(5) Development and approval of:

(a) Explosives safety policy, directives, and standing operating procedures (SOPs).

(b) Explosive safety site plans/submissions and licenses (per MACOM policy).

(c) Waivers, exemptions, and certificates of compelling reason.

(6) Investigation and reporting (including serious incident reports) of accidents involving ammunition or explosives and documentation and dissemination of explosives safety lessons learned.

(7) Contractor explosives safety requirements and oversight.

(8) Fire prevention and protection.

c. Installation/Area Support Group (ASG) safety offices will coordinate explosives safety for all hosted units and activities.

J–2. Responsibilities

a. MACOM commanders will establish and implement a written explosives safety program. MACOM explosives safety programs shall address the following:

(1) Appointment of an Occupational Safety and Health Manager in accordance with AR 385-10, qualified under Office of Personnel Management standards, as the single point of contact for all aspects of the MACOM Safety Program, including management of the explosives safety program.

(2) Compliance with AR 385-10, AR 385-64, and this pamphlet.

(3) Assurance that subordinate organizations maintain effective explosives safety programs.

(4) Designation, in writing, of subordinate officials authorized to exercise waiver and exemption approval authority in accordance with MACOM risk acceptance decision policy.

(5) Review of and concurrence on memorandums of agreement (MOAs) concerning the storage or disposal of non-DOD hazardous materials on Army real estate, consistent with the requirements of 10 USC 2692 and with any delegation of authority necessary under 10 USC 2692.

(6) Integration of explosives safety into MACOM policy, procedures, and activities.

b. Commanders of Installations/ASGs and agencies with an ammunition or explosives mission will--

(1) Establish a written explosives safety program, to implement AR 385-64 and this pamphlet, that identifies the responsibilities of all organizations (including tenants) with an explosive mission and provides for memoranda of agreement regarding explosive safety requirements and responsibilities between the Installation Commander and tenants.

(2) Appoint an Occupational Safety and Health Manager in accordance with AR 385-10, who is qualified under Office of Personnel Management standards, as the single point of contact for all aspects of the safety program including management of the explosives safety program.

(3) Ensure competent and qualified personnel initiate and review site plans, safety submissions, and facility designs and that installation master plans consider explosives safety requirements.

(4) Ensure competent and qualified personnel initiate and review explosive safety waiver and exemption requests for facilities and equipment and provide the commander with essential risk assessment data regarding the deficient situation.

(5) Ensure operating, training, and construction plans and budgets provide resources adequate to comply with explosives safety requirements and to abate explosives safety hazards, per AR 385-10.

c. Commanders of units, and the battalion level and above, with an ammunition mission will establish a unit explosives safety program to implement this pamphlet and AR 385-64.

d. MACOM Safety Directors shall:

(1) Conduct periodic evaluations to ensure the effectiveness of MACOM and subordinate command explosives safety programs.

(2) Brief their Command and staff, as necessary, to keep the leadership informed of explosive safety requirements and issues and the status of the Commander's explosives safety program.

e. Installation/ASG and Unit Safety Managers will:

(1) Serve as the command point of contact for all safety-related ammunition and explosives actions.

(2) Initiate development of explosives licenses, explosives safety site plans, and explosives safety waivers, exemptions and certificates of compelling reasons and coordinate these with appropriate staff elements (e.g., J-3/G-3/S-3, J-4/G-4/S-4, Engineering, and Logistics elements), and with Installation/ASG and/or unit QASAS support personnel.

(3) Ensure all potential explosions sites (PES) and exposed sites (ES), both military and civilian are indicated on approved explosives safety site plans/submissions.

(4) Ensure plans and designs for explosive manufacture, testing, storage, surveillance, maintenance, demilitarization, and disposal facilities are reviewed, by appropriately trained personnel, for compliance with safety standards.

(5) Ensure a safety inspection is conducted for all ammunition and explosive production, handling, storage, use, maintenance, demilitarization, and disposal areas at least annually. Maintain a list of all such areas and records of inspections.

(6) Monitor selected ammunition uploads and other activities that involve the transportation and storage of ammunition as necessary to ensure that pertinent requirements are met.

(7) Serve as the focal point for and coordinate explosives safety program requirements with tenant unit Commanders. Provide concurrence on explosives safety programs of tenant units.

(8) Review the installation master plan and quantity-distance (QD) compliance for planned facilities on existing ammunition and explosives sites both prior to and after construction.

(9) Review policies, SOPs, and directives for compliance with explosive safety requirements.

(10) Review waivers, exemptions, and certificates of compelling reason for completeness and accuracy prior to forwarding for approval.

(11) Advise incoming commanders of existing waivers, exemptions, or deviations and plans for correction of such situations.

(12) Actively participate in the installation master planning process and review, annually, the installation master plan to ensure construction is not planned inside explosives safety arcs. When construction not related to ammunition operations is required within explosive safety arcs, ensure explosive safety site plans and explosive licenses are updated and approved at the appropriate level.

(13) Ensure procedures are developed and in place for:

(a) Maintaining fire symbols and chemical hazard symbols current with actual ammunition and explosives stored at a particular location.

(b) Ensuring that personnel responsible for managing ammunition and explosives keep current information on the type and location of ammunition and explosives storage and provide this information to safety and fire fighting personnel.

(c) Training of personnel responsible for ammunition operations, operational personnel (including security personnel), and fire fighters in fire symbols and chemical hazard symbols and in precautions and procedures for fighting fires when ammunition or explosives are involved.

(d) Existence of adequate communications between safety, fire fighting, security, and ammunition surveillance and storage personnel.

(e) Maintenance of current maps, showing all explosives locations with fire and chemical hazard symbols, and current facility response cards/notebooks for explosives/ammunition storage by fire station communication centers.

(14) Annually review (and document the review) the installation explosives location map to monitor encroachment within explosives safety arcs and ensure required licensing and/or site planning is accomplished.

(15) Monitor selected operations involving explosives to ensure Army units understand and comply with explosive safety standards.

(16) Monitor, on a periodic basis, selected explosive activities to evaluate explosive safety and the integration of risk management. Activities that should be monitored include, but may not be limited to:

(a) Explosive storage, handling, and operating sites.

(b) Explosives transportation activities.

(c) Explosives disposal and demilitarization activities.

(d) Weapon systems modifications, special exercises, and test programs.

(e) Planning for contingencies.

(f) Combat load and reload operations.

(g) Explosive safety training records for unit personnel.

(17) Assist Commander and staff with safety concerns associated with real property containing, or suspected of containing, ammunition and explosives (UXO).

(18) Investigate and report ammunition and explosives accidents, IAW DoD 6055.9-STD and AR 385-40, and document and disseminate explosives safety lessons learned.

(19) Brief their Command and staff, as necessary, to keep the leadership informed of explosive safety requirements and issues and the status of the Commander's explosives safety program.

f. QASAS personnel supporting MACOMs, installations/ASGs, and units will provide technical assistance to Safety Directors and Managers in the following areas:

(1) Development of explosives licenses and explosives safety site plans/submissions and explosives licenses.

(2) Explosives safety waiver and exemption requests and certificates of compelling reasons.

(3) Reviewing designs for explosive production, manufacture, testing, storage, surveillance, maintenance, demilitarization, and disposal facilities for compliance with explosive safety standards.

(4) Conducting safety inspections of ammunition and explosives handling, storage, use, maintenance, and disposal areas at least annually.

(5) Monitoring ammunition uploads and other activities that involve the transportation and storage of ammunition in other than authorized and licensed storage areas to ensure that pertinent requirements are met.

(6) Reviewing quantity-distance (QD) compliance of existing and planned facilities, both prior to and after construction.

(7) Reviewing SOPs and directives for compliance with explosive safety requirements.

(8) Assisting in the installation master planning process and reviewing, annually, the installation master plan to ensure construction is not planned inside explosive safety arcs.

(9) Monitoring operations involving ammunition and explosives to ensure that Army units understand and comply with explosive safety standards.

(10) Monitoring and evaluating explosives activities, including the following:

(a) Explosive production, storage, handling, maintenance, operating, demilitarization, and disposal sites.

(b) Explosives transportation.

(c) Explosives disposal and demilitarization.

(d) Weapon systems modifications, special exercises, and test programs.

(e) Contingency planning.

(f) Combat load and reload operations.

(g) Explosives safety training for unit personnel.

(11) Investigating ammunition and explosives accidents.

J–3. Explosives safety training

All personnel (supervisory and non-supervisory) who produce, handle, transport, store, inspect, test, maintain, use, demilitarize, or dispose of explosives shall complete explosives safety training, appropriate for their job requirements, to enable them to perform these activities in a safe manner. Periodic refresher training will be completed as necessary to ensure knowledge of and competency in, explosive safety.

a. In addition to training mandated by local, State, and/or Federal training requirements, explosives safety training (MACOM, installation/ASG, and unit level) shall be accomplished as indicated in Table J-1. (This training is in addition to explosives training specified for career programs in AR 690-950 and related publications.) MACOM Commanders may approve courses, other than those listed, and tailored to their missions and functions if the courses provide the same degree and level of training. Initial training as specified in Table J-1 should be accomplished as soon as practical based on mission, funding, and resource constraints.

b. Installation/ASG and unit safety managers shall develop, and provide as appropriate to training officers, programs as required to ensure installation/ASG and unit personnel are trained to conduct ammunition and explosives operations in a safe manner.

Table J–1
Army Explosives Safety Courses

Position	Army Explosives Safety Courses								
	Explosives Safety for Safety Professionals	Ammunition Holding Area Managers' Course [1]	Risk Management for Ammunition Operations (USADAC #AMMO-56)	Army Explosives Safety Standards (USADAC #AMMO-16)	Environmental Considerations for Ammunition Personnel (USADAC #AMMO-31)	Preparation and Review of SOPs for Ammunition and Explosives Operations (USADAC #AMMO-54)	Military Munition Rule Phase 2 (CBT)	Explosives Safety for Defense Contractors (USADAC #AMMO-34)	Introduction to Ammunition AMMO-45 (CBT)
Ammunition Supply Point Supervisor		I(M)	I(R)		I(R)	I(R)	I(M), A(M)	I(R)	T(R)
Ammunition Supply Point Personnel		I(M)	I(R)		I(R)	I(R)	I(M), A(M)		A(R)
Range Control Officer	I(R)	I(R)	I(R)		I(R)	I(R)	I(M), A(M)		T(R)
Range Safety Personnel (Unit and Installation)	I(R)	I(R)	I(R)		I(R)	I(R)	I(M), A(M)		A(R)
Safety Manager	I(M)	I(R)	I(M)				I(M), A(M)		T(M)
Safety Professionals with Explosives Safety Responsibilities	I(M)	I(M)		I(R)	I(R)	I(R)	I(M), A(M)	I(R)	T(M)

Notes
Numbers in parentheses are U.S. Army Defense Ammunition Center course numbers.
[1] Currently under development
I = initial
A = annual refresher
T = triennial refresher
M = mandatory
R = recommended

J–4. Explosives safety inspections

Periodic (at least annual) inspections shall be conducted to evaluate the safety of explosive storage, packing, handling, surveillance, maintenance, demilitarization, and disposal activities. Inspections should utilize a team approach and include those elements with responsibilities in explosives safety (e.g., safety, QASAS, logistics, and public works subject matter experts). Findings shall be documented and followed-up to ensure implementation and effectiveness of corrective measures. At the minimum, inspections shall address the following:

a. Availability of approved explosives safety site plans/submissions and explosives licenses.

b. Storage inventory, by facility, showing ammunition (by DODAC, nomenclature, quantity, and total net explosive weight) is in compliance with explosive safety standards.

c. Comparison of actual storage versus that authorized by the explosives license or explosives safety site plan.

d. Identification of storage compatibility violations.

e. Ammunition and explosives stacking and arrangement in magazines and adequacy of ammunition packaging are in accordance with explosive safety standards and ammunition storage drawings.

f. Operations conducted - versus those permitted - in and outside of magazines.

g. Conditions under which ammunition and explosives are stored.

h. Verification of quantity-distance (QD) separation requirements stipulated in explosive licenses and explosives safety site plans.

i. Evaluation of the safety of storage facilities, including adequacy of earth cover on magazines, adequacy of barricades, and condition of lightning protection systems and ventilators.

j. Review of the latest lightning protection system inspection and test reports.

k. Training of firefighters; adequacy of plans and procedures for responding to explosives emergencies; conduct of fire drills; and availability and adequacy of firefighting equipment, fire symbols, and chemical hazard symbols.

l. Identification and control of electrical hazards, including classification of hazardous locations and the availability and adequacy of approved equipment.

m. Safety of material handling equipment.

n. Safety of explosives renovation, modification, preservation, and packing activities.

o. Adequacy and availability of explosive safety training of personnel involved in explosive storage, packing, handling, surveillance, maintenance, demilitarization, and disposal activities.

p. Safe storage of waste munitions.

J–5. Ammunition and explosives transportation surveys

Installations/ASGs and units shall conduct periodic surveys of sample ammunition and explosives transportation activities to evaluate implementation of ammunition and explosives transportation safety requirements. Surveys should utilize a team approach and include those elements with responsibilities in ammunition and explosives transportation safety (e.g., safety, QASAS, and logistics subject matter experts). At the minimum, surveys shall address the following:

a. Compatibility of explosives in transportation.

b. Training and certification of personnel involved in explosives handling and transportation.

c. Inspection of motor vehicles, MILVANS, and trailers.

d. Explosives blocking and bracing.

e. Placarding and labeling.

f. Training of firefighters; adequacy of plans and procedures for responding to explosives emergencies; conduct of fire drills; and availability and adequacy of firefighting equipment, fire symbols, and chemical hazard symbols.

g. Safety of material handling equipment.

J–6. Installation explosive location maps

Each installation shall maintain an explosive location map, developed jointly by Installation facility engineering or public works, plans and operations, safety, and logistics elements. The installation explosive location map will include:

a. Explosives hazard class and division and the net explosive weight authorized at each site.

b. Explosives safety ’clear zones’ required around each location based on quantity-distance criteria.

c. Primary and alternate explosive movement routes through the installation.

d. Locations, outside of designated impact areas, authorized for conducting explosives operations to include explosives on- or off-loading, and combat aviation explosives loading.

e. Any airfield locations for handling hung ordnance and gun-clearing operations.

f. Tracked vehicles upload and download areas (other than at authorized firing ranges).

g. Explosives support facilities, such as ammunition holding areas.

h. Locations of real property and facilities containing unexploded ordnance (UXO) or ammunition and explosives residue.

J–7. Range safety

Each command with firing ranges must establish a range safety program consistent with AR 385-63, DA Pam 385-63, and AR 210-21.

Appendix K
Investigating and Reporting Unpermitted or Uncontrolled Detonation, Release, Discharge, or migration of Waste Military Munitions

K–1. Initial reports

a. Telephonic and electrically transmitted reports shall be provided as soon as possible and shall include as much of the following data as may be immediately available.

(1) Name and location of the reporting activity.

(2) Name, title, and telephone number of person reporting, and of contact at the scene of the accident.

(3) Location of mishap (activity, city, installation, building number or designation, road names, or similar information).

(4) Item nomenclature (Mk, Mod, FSC, NIN, DODAC, or NALC).

(5) Quantity involved (number of items and NEW).

(6) Day, date, and local time of initial significant event and when discovered.

(7) Description of significant events (include type of operation involved).

(8) Number of fatalities (military, DoD civilian, or other civilian).

(9) Number of persons injured (military, DoD civilian, or other civilian).

(10) Description of material damage (government or nongovernment).

(11) Material damage cost (government or nongovernment).

(12) Cause.

(13) Action taken or planned (corrective, investigative, or EOD assistance).

(14) Effect on production, operation, mission, or other activity.

(15) Details of any remaining chemical agent hazard or contamination, if applicable.

(16) Are any news media aware (yes or no).

b. Regardless of format, mishap reports prepared or received in compliance with other DoD Component regulatory documents may be used to satisfy these reporting requirements whenever they contain similar data.

K–2. Follow-up reports

a. Follow-up reports shall be submitted to the DDESB by way of priority-precedence, electrically transmitted message within 2 workdays after notification of an occurrence has been received and shall contain any additional detailed information on the data elements contained in section K-1, above.

b. Regardless of format, supplemental mishap reports prepared or received in compliance with other DoD Component regulatory documents also may be used to satisfy the follow-up reporting requirement whenever they contain similar data.

K–3. Investigation reports

a. Event circumstances. The following data, as applicable, shall be included as a part of the mishap investigation reports. Chemical agent mishaps shall also require the inclusion of the data specified in section K-4, below.

(1) Location, date, and local time.

(2) Type of operation or transportation mode engaged in at time of the mishap (include reference to applicable standing operating procedure or regulatory document).

(3) Description of mishap.

(4) Quantity, type, lot number, configuration, and packaging of ammunition, explosives, or chemical agents involved in mishap.

(5) Type of reaction or reactions.

(a) Single reaction, such as detonation, deflagration, fire, release, or activation.

(b) Multiple reaction, such as detonation and fire.

(c) Communication of reactions, such as fire caused fire, fire caused detonation, and detonation caused detonation, and the time between events.

(6) Possible or known causes.

b. Event effects. A copy of aerial and ground photographs taken of the mishap site shall be submitted to the DDESB as soon as possible after the occurrence. When appropriate, include photographs (color, whenever possible), maps, charts, and overlays, showing or listing the following data.

(1) Number of persons killed or injured (military, DoD civilian, or other civilian). Indicate cause of fatalities and injuries, and location of affected persons with respect to the mishap origin.

(2) Property damage at the mishap origin (government or nongovernment).

(3) Area containing property with complete destruction (more than 75 percent).

(4) Area containing property damage beyond economical repair (50 to 75 percent).

(5) Area containing repairable property damage (1 to 49 percent). Indicate event origin, and a description of the damage and its cause.

(6) Radii of uniform and of irregular glass breakage. When possible, include type and dimensions of glass broken at farthest point.

(7) Locations and dimensions of craters.

(8) Distances from the mishap origin at which direct propagation occurred, and whether from blast, fragments, or firebrands.

(9) Approximate number, size, and location of hazardous fragments and debris.

c. Factors contributing to or limiting event effects. When appropriate, describe the influence of the following factors on the mishap:

(1) Environmental and meteorological, such as cloud cover, wind direction and velocity, temperature, relative humidity, electromagnetic radiation (EMR), and electrostatic buildup and/or discharge.

(2) Topography, such as hills, forests, and lakes.

(3) Structural features at the mishap origin, such as exterior and interior walls and bulkheads, roofs and overheads, doors and hatches, cells or magazines, earth cover, and barricades.

(4) Safety features, other than structural, at the mishap origin, such as remote controls, sprinkler or deluge systems, detectors, alarms, blast traps, and suppressive shielding.

(5) Structures. Position, orientation, and type of construction of all structures, damaged or not, located within maximum radius of damage. When either the applicable intermagazine, intraline, or inhabited building distances are greater than the radius of actual damage, show the location, orientation, and type construction of all structures situated within the Q-D radii.

(6) Vessels, vehicles, and mobile equipment. Location within maximum radius of damage, or if the Q-D requirements are greater, location within the K9,K18, K24, and K30 Q-D radii.

(8) Personnel. Location within maximum radius of damage, or if the Q-D requirements are greater, location within the K9, K18, K40, and K50 Q-D radii.

(9) Explosives, ammunition, and chemical agents. Location, type, configuration, amounts, and protection provided within maximum radius of damage, or if the Q-D requirements are greater, location within the applicable magazine and intraline radii.

d. Analyses, conclusions, and recommendations.

K–4. Chemical agent mishaps

In addition to the data required by section K-3, above, for ammunition and explosives mishaps, each chemical agent mishap investigation report shall contain the following information.

a. Injuries.

(1) The safety training those personnel received applicable to duty being performed at the time of the mishap.

(2) The availability, type, and use of protective equipment.

(3) A description of the emergency measures taken or performed by individuals at the scene of the mishap.

(4) A summary of applicable medical data.

(5) A sketch showing locations where disabling injuries occurred, and indicating the distance and direction from the agent source.

b. Mishap area. In addition to the environmental and meteorological data required by paragraph K-3c(1), above, indicate:

(1) The facility filter types and the facility ventilation and air turnover rates.

(2) The rate and manner of agent release and any other data used to determine the downwind hazard.

(3) The status and disposition of chemical agent remaining at the mishap.

(4) The details of any remaining chemical agent hazard and contamination, if applicable.

Glossary

Section I
Abbreviations

AC
active component

A&E
ammunition and explosives

AFFF
aqueous film-forming foam

AMC
U.S. Army Material Command

AMCCOM
U.S. Army Armament, Munitions and Chemical Command

ANSI
American National Standards Institute

APA
ammunition and prohibited area

AR
Army regulation

ARNG
Army National Guard

ASA(IL&E)
Assistant Secretary of the Army(Installations, Logistics & Environment)

ASME
American Society of Mechanical Engineer

ASP
ammunition supply point

ATP
ammunition transfer point

AWG
American wire gauge

A/D
approach/departure

BLA
basic load ammunition

BLAHA
basic load ammunition holding area

BOE
Bureau of Explosives

BOM
Bureau of Mines

C
Celsius

CBU
cluster bomb unit

CBDCOM
Chemical Biological Defense Command

CCL
combat configured load

CFR
Code of Federal Regulations

DA
Department of Army

DA PAM
Department of Army pamphlet

DDESB
Department of Defense Explosives Safety Board

DPDO
Defense Property Disposal Office

DOD
Department of Defense

DODIC
Department of Defense identification code

DOT
Department of Transportation

DSN
Defense switched network

ECM
earth covered magazine

EED
electro-explosive device

EIDS
extremely insensitive detonating substance

EMR
electromagnetic radiation

EOD
explosives ordnance disposal

EP
Engineers Pamphlet

EPA
Environmental Protection Agency

ES
exposed site

F
Fahrenheit

FAE
fuel-air explosive

FARP
forward area rearm/refuel point

FLOT
forward line of own troops

FORSCOM
United States Army Forces Command

fpm
feet per minute

fps
feet per second

FSU
field storage unit

GBL
Government bill of lading

HAS
hardened aircraft shelter

HC
hexachloroethane

HD
hazard class/division

HE
high explosive

HQDA
Headquarters, Department of Army

IBD
inhabited building distance

ICM
improved conventional munition

ID
identification

IFR
instrument flight rules

IL(B)
intraline, barricaded

ILD
intraline distances

IL(U)
intraline, unbarricaded

ISO
International Standards Organization

JHCS
Joint Hazard Classification System

LP
liquid petroleum

LPS
lightning protection system

MACOM
major Army command

MAG
magazine

MCA
military construction, Army

MCE
maximum credible event

MHE
material handling equipment

MICOM
United States Army Missile Command

MILVAN
military demountable container

MIL STD
military standard

MSDS
material safety data statement

MTMC
Military Traffic Management Command

MWD
military working dog

NATO
North Atlantic Treaty Organization

NAVFAC
naval facility

NEC
National Electrical Code

NEQ
net explosives quantity

NEW
net explosives weight

NEWQD
net explosives weight for QD

NFPA
National Fire Prevention Association

OB
open burning

OCE
Office of Chief Engineers

OD
open demolition

OSHA
Occupational Safety and Health Administration

P&P
packaging and preservation

PES
potential explosion site

POL
petroleum, oils, and lubricants

PPWR
prepositioned war reserve

PSI
pounds per square inch

PSP
pre-stock point

PTR
public traffic route

PWP
plasticized white phosphorous

QC
quality control

Q-D
quantity-distance

RC
reserve component

RCW
reinforced concrete wall

RF
radio frequency

RORO
roll on, roll off

ROTC
Reserve Officer Training Corps

SAE
Society of American Engineers

SCG
storage compatibility group

SDW
substantial dividing wall

SF
standard form

SOP
standing operating procedure

TB
technical bulletin

TEA
triethylaluminum

TH
thermite

TM
technical manual

TO
transportation officer

TOFC
trailer-on-flat car

TPA
thickened pyrophoric agent

UL
Underwriter's Laboratory

UNO
United Nations Organization

USACE
United States Army Corps of Engineers

USATCES
United States Army Technical Center for Explosives Safety

USCG
United States Coast Guard

VAC
volts alternating current

VFR
visual flight rules

WP
white phosphorous

Section II
Terms

Aboveground magazines
Any type of magazine abovegrade other than standard or nonstandard earth covered types of magazines.

Administration area
The area in which administrative buildings that function for the installation as a whole, excluding those offices located near and directly serving components of explosives storage and operating areas, are located.

Aircraft parking area
Any area set aside for parking aircraft not containing explosives.

Aircraft passenger transport operations
Passenger transport traffic involving military dependents and civilians other than those employed by or working directly for DOD components.

Ammunition and explosives
Includes (but is not limited to) all items of ammunition; propellants, liquid and solid; high and low explosives; guided missiles; warheads; devices; pyrotechnics; chemical agents; and components and substances associated therewith, presenting real or potential hazards to life and property.

Ammunition and explosives aircraft cargo area
An area designated for the temporary storage of transportation configured loads of ammunition and explosives. These loads may or may not be loaded on the aircraft.

Ammunition and explosives area
An area specifically designated and set aside from other portions of an installation for the development, manufacture, testing, maintenance, storage, disposal, or handling of ammunition and explosives.

Ammunition and explosives holding area (A&E HA)
An area that is used for temporary storage, weapons assembly and staging. This area is established to fulfill the operational requirements of the various types of FARPs.

Ammunition and explosives staging area
An area used as a transient area for A&E. This area may be used for staging all-up-round weapons, staging weapons to support daily aircraft requirements, or for the assembling convoys.

Ammunition storage unit (ASU)
All types of explosives storage magazines including outdoor or indoor, open storage areas, sheds, bunkers, and earth-covered and above-ground magazines.

Armament pads
A location where ammunition is located for immediate loading onto combat aircraft or vehicles.

Army accident
An unplanned event or series of events that results in damage to Army property, occupational illness to Army military or civilian personnel, injury or death to Army military personnel on- or off-duty, injury to on-duty civilian personnel, damage to public and private property, or injury or illness to non-Army personnel as a result of Army operations.

Asset preservation
A level of protection provided to assets in an ES (from a PES) by either distance from a PES or from protective

construction design features that ensure that there is no propagation of reaction from the PES to the ES assets, and that the assets are expected to be usable following an incident in the PES.

Auxiliary building
Any building accessory to, or maintained and operated to serve, an operating building, line, plant, or pier area.

B-duration
The total time in milliseconds for the noise pressure to rise to peak and then fall back. To the human ear there is only a single sound. Specialized equipment is required to measure the sound wave to determine its B-duration. Procedures to calculate impulse noise B-duration from measured sound waves are in Mil Std 1474.

Barricade
An intervening barrier, natural or artificial, of such type, size, and construction as to limit in a prescribed manner the effect of an explosion on nearby buildings or exposures.

Basic load ammunition holding area (BLAHA)
A storage area for basic load ammunition located within the boundaries of a barracks or in the immediate vicinity thereof, in armored vehicles, trucks, trailers, structures, or on pads to ensure mission readiness. BLAHAs consist of one or more storage sites and involve acceptance of risks to personnel, facilities and equipment that are greater than that normally permitted.

Blast overpressure
The pressure, exceeding the ambient pressure, manifested in the shock wave of an explosion.

Build-up location
A location where ammunition is prepared for use. For example, bomb fins are attached to bombs, rockets assembled and fuzed, etc.

Burning grounds
The area dedicated to burning of energetic materials. This includes actual burning sites and facilities dedicated to the burning operation.

Burning site
The actual location where energetic materials are burned, for example, a burning pan.

Cell
Various small compartments or bounded areas forming part of a module.

Change house
A building provided with facilities for employees to change to and from work clothes.

Chemical agent
A substance that is intended for military use with lethal or incapacitating effects upon humans through its chemical properties. Excluded from chemical agents for purposes of this standard are riot control agents, chemical herbicides, smoke-and flame-producing items, and individual dissociated components of chemical agent ammunition.

Chemical ammunition
Ammunition, the filler of which has the basic function of producing a toxic or irritant effect on the body, a screening or signaling smoke, or an incendiary action.

Chemical munitions and agents
An agent or munition that through its chemical properties, produces lethal or other damaging effects to human beings, except that such term does not include riot control agents, chemical herbicides, smoke and other obscuration materials.

Classification yard
A railroad yard used for receiving, dispatching, classifying, and switching of cars.

Closure block
A protective construction feature designed to seal the entrance tunnel to an underground storage chamber in the event of an explosion within the chamber. MAGAE blocks are passive closures that are driven by the blast from a normally

open to a closed position. KLOTZ blocks are active closures, operated by a hydraulic system to move from a normally closed to an open position (for access).

Combat aircraft parking area (CAPA)
Any area specifically designated for parking aircraft loaded with combat-configured explosives, or those being loaded, unloaded, or awaiting loading. This includes aircraft hangars and alert shelters.

Combat configured load
A mixed ammunition package designed to provide for the complete round concept, type of unit, type of vehicle, capacity of transporter, and weapons system. Contents of the package is predetermined and provides optimum quality and mix to support a particular weapons system or unit.

Compatibility
Ammunition or explosives are considered compatible if they may be stored or transported together without increasing significantly either the probability of an accident or, for a given quantity, the magnitude of the effects of such an accident.

Component
Any part of a complete item whether loaded with explosives, inert (not containing explosives), or empty (not filled with explosives).

Compatibility group
The compatibility group for ammunition, explosives and/or other hazardous materials which can be stored and/or transported together without significantly increasing the probability of accident or, for a given quantity, the magnitude of the effects of such an accident. The compatibility groups are based on the system recommended for international use by the United Nations Organization (UNO) and as adopted by NATO and the Department of Defense.

Commercial intermodal container (CIC)
Containers used for transportation of DoD A&E that have met standards established by the International Organization for Standardization (ISO). These containers area also referred to as ISO, freight and dry cargo commercial containers.

Competent authority
An individual of the armed forces designated in command, responsible for the direction, coordination and control of military forces. The commander alone is responsible for everything his unit does or fails to do. He cannot delegate his responsibility, or any part of it although he may delegate portions of his authority to competent individuals. An individual designated by the commander to address areas of primary interest within that individual's technical expertise.

Conditional exemption (CE)
An exemption from the regulatory definition of hazardous waste (and therefore from compliance with specific environmental requirements pertaining to the storage of hazardous waste) conditioned on compliance with certain criteria requirements as set forth in 40 CFR 266.205.

Conveyance
A truck, tractor trailer, railcar or commercial intermodal container (CIC) used for transportation of ammunition, explosives or hazardous material.

Debris
Any solid particle thrown by an explosion or other strong energetic reaction. For aboveground detonations, debris usually refers to secondary fragments. For underground storage facilities, debris refers to both primary and secondary fragments, which are transported by a strong flow of detonation gases.

Debris trap
A protective construction feature in an underground storage facility that is designed to capture fragments and debris from a detonation within the facility. This is usually accomplished by using the inertia of the material to separate it from the detonation gas stream. (Illustrated in Figure 5-9).

Deflagration
A rapid chemical reaction in which the output of heat is enough to enable the reaction to proceed and be accelerated

without input of heat from another source. Deflagration is a surface phenomenon with the reaction traveling along the surface at subsonic velocity.

Demilitarize
To mutilate, disarm, neutralize, and accomplish any other action required to render ammunition, explosives, and chemical agents innocuous or ineffectual for military use.

Detonation
A violent chemical reaction within a chemical compound or mechanical mixture involving heat and pressure. A detonation is a reaction which proceeds through the reacted material toward the unreacted material at a supersonic velocity. A detonation, when the material is located on or near the surface of the ground, is normally characterized by a crater.

Distribution lines
Electrical lines supplying multiple installation locations.

Dividing wall
A wall designed to prevent, control, or delay propagation of an explosion between quantities of explosives on opposite sides of the wall.

Dolphin
A mooring post or posts on a wharf or quay.

Dud
Explosive munition which has not armed as intended or which has failed to function after being armed. (See misfire.)

Dummy ammunition
Ammunition or ammunition components having the appearance of actual items and not having any explosives components.

Electrical lines
See transmission lines, distribution lines, or service lines.

Empty ammunition
Ammunition or ammunition components void of any type of filler.

Engineering controls
Regulation of facility operations through the use of prudent engineering principles, such as facility design, operation sequencing, equipment selection, and process limitations.

Exemption
A written authority that permits long-term noncompliance with mandatory requirement of U.S. Army ammunition and explosives safety standards.

Expansion chamber
A protective construction feature in an underground storage facility which is designed to reduce the blast shock and overpressure exiting the facility by increasing the total volume of the complex. It may also function as an operating area within the underground facility, as well as a debris trap. (Illustrated in Figure 5-9).

Explosion
A chemical reaction of any chemical compound or mechanical mixture that, when initiated, undergoes a very rapid combustion or decomposition, releasing large volumes of highly heated gases that exert pressure on the surrounding medium. Depending on the rate of energy release, an explosion can be categorized as a deflagration or a detonation.

Explosives anchorage
An area of water specifically designated for loading and unloading and anchoring vessels carrying a cargo of ammunition and explosives.

Explosives area
A restricted area specifically designated and set aside from other portions of an installation for the manufacturing, processing, storing, and handling of explosives and ammunition.

Explosives facility
Any structure or location containing ammunition and explosives, excluding combat aircraft parking areas or ammunition and explosives aircraft cargo areas.

Explosives-loaded aircraft
An aircraft is 'explosives-loaded' when it carries munitions or explosives, internally or externally. The term does not include explosive components of aircrew escape systems or pyrotechnics installed in survival and rescue kits.

Exposed site
A location exposed to the potential hazardous effects (blast, fragments, debris, and heat flux) from an explosion at a PES.

Field office
An office required by operational supervision; for example, foremen and line supervisors, in direct support of ammunition and explosives operations.

Firebrand
A projected burning or hot fragment whose thermal energy is transferred to a receptor.

Fire hazard area
A location in which the primary, but not necessarily the only, hazard is that of fire, including "explosions" of gas or vapor and air mixtures.

Fire-resistive
A term used to indicate the property of structures or materials to resist a fire to which they might be subjected, without themselves becoming weakened to the point of failure.

Fire-retardant
A term used to designate generally combustible materials or structures which have been treated or have surface coverings designed to retard ignition or fire spread.

Fire wall
A wall of fire-resistive construction designed to prevent the spread of fire from one side to the other. A fire wall may also be termed a "fire division wall."

Fixed ammunition
Ammunition, except small arms and rocket ammunition, consisting of a cartridge case loaded with propellant and a projectile which are loaded in one operation into the weapon, the cartridge case being firmly attached to the projectile.

Flame-resistant
A term applied to combustible materials, such as clothing, which have been treated or coated to decrease their burning characteristics.

Flammable
A material which has the characteristic of being easily ignited and burning readily.

Flightline munitions holding area
Designated location on the flightline where built up munitions are temporarily placed pending delivery to combat aircraft or return to storage.

Forward arming and refueling point (FARP)
A temporary facility, organized, equipped and deployed by an aviation commander, and normally located in the main battle area closer to the area of operation than the aviation unit's combat service area, to provide fuel and ammunition necessary for the employment of aviation maneuver units in combat. The FARP permits combat aircraft to rapidly refuel and rearm.

Fragment
A piece of an exploding or exploded munition. Fragments may be complete items, subassemblies, pieces thereof, or pieces of equipment or buildings containing the items.

Fragment distance
The limiting range, based on a specific density of hazardous fragments, expected from the type and quantity of explosives involved. Used in establishing certain Q-D criteria. A hazardous fragment is a fragment having an impact energy of 58 foot-pounds or greater. Hazardous fragment density is a density of hazardous fragments exceeding one per 600 square feet.

Hangfire
Temporary failure or delay in the action of a primer, igniter, or propelling charge.

Hazard
Any real or potential condition that can cause injury, illness, or death of personnel, or damage to or loss of equipment or property.

Hazard analysis
The logical, systematic examination of an item, process, condition, facility, or system to identify and analyze the probability, causes, and consequences of potential or real hazards.

Hazard class
The United Nations Organization (UNO) hazardous classification system, which contains nine hazard classes, is used by the DoD for dangerous materials to identify the hazardous characteristics of A&E. Hazard Class 1 (A&E) is further divided into seven division designators that indicate the primary characteristics and associated hazards.

Hazardous fragment
A fragment having an impact energy of 58 ft-lb or greater and/or a weight greater than 2,700 grains (6.17 ounces or 175.5 grams).

Hazardous fragment density
A density of hazardous fragments exceeding one per 600 square feet.

Hazardous material
The component of, or an item of, ammunition which is inherently designed to produce the necessary energy required for ignition, propulsion, detonation, fire or smoke, thus enabling the item to function. Also, a material (corrosive, oxidizer, etc.) which inherently is dangerous and capable of serious damage and which, therefore, requires regulated handling to avoid creating accidents in connection with its existence and use.

Heavy armor
Main battle tanks or other vehicles that are expected to contain fragments and reduce blast over pressure generated from the detonation of ammunition contained internally.

High explosive equivalent or explosive equivalent
The amount of a standard explosive that, when detonated, will produce a blast effect comparable to that which results in the same distances from the detonation or explosion of a given amount of the material for which performance is being evaluated. For the purpose of these standards, TNT is used for comparison.

Holding yard
A location for groups of railcars, trucks, or trailers used to hold ammunition, explosives, and dangerous materials for interim periods before storage or shipment.

Hygroscopic
A tendency of material to absorb moisture from its surroundings.

Hypergolic
A property of various combinations of chemicals to self-ignite upon contact with each other without a spark or other external initiation.

Inert ammunition
Ammunition containing no explosives or chemical agents.

Inert area
Any area other than an explosives or ammunition area within an establishment.

Inert components
The parts of ammunition which do not contain explosives or chemical agents.

Inhabited buildings
Buildings or structures, other than operating buildings occupied in whole or in part by human beings, both within and outside DOD establishments.

Inhabited building distance (IBD)
The minimum distance permitted between an inhabited building and an ammunition or explosives location for the protection of administration, quarters, industrial and other similar areas within a naval shore establishment.

Inspection station
A designated location at which trucks and railcars containing ammunition and explosives are inspected.

Interchange yard
An area set aside for the exchange of railroad cars or vehicles between the common carrier and DOD activities.

Intraline distance
The distance to be maintained between any two operating buildings and sites within an operating line, of which at least one contains or is designed to contain explosives, except that the distance from a service magazine for the line to the nearest operating building may be not less than the intraline distance required for the quantity of explosives contained in the service magazine.

Joint DOD non-DOD use runway/taxiway
A runway/taxiway serving both DOD and commercial aircraft. A runway/taxiway serving solely DOD, DOD chartered, or Non-DOD aircraft on DOD authorized business is not joint use.

Joint-use airfield
An airfield serving both DoD and commercial aircraft. An airfield serving solely DoD, DoD chartered, or non-DoD aircraft on DoD authorized business is not joint use.

K-factor
The factor in the formula $D=KW^{1/3}$ used in quantity-distance determinations where D represents distance in feet and W is the net explosive weight in pounds. The K-factor is a constant and represents the degree of damage that is acceptable. Typical constants range from 1.25 to 50; the lower the factor, the greater the acceptance of damage.

Launch pads
The load-bearing base, apron, or platform upon which a rocket, missile, or space vehicle and its launcher rest during launching.

Light armor
Armored vehicles that are not expected to contain the fragments or over pressure of a detonation of the internally stored ammunition but who's armor does give protection from an external detonation. For example, M113 series vehicles are considered light armor.

Liquid propellants
Substances in fluid form (including cryogenics) used for propulsion or operating power for missiles, rockets, ammunition, and other related devices (See table 5–16.). Hydrocarbon fuels used in the operation of ships, aircraft and other vehicles are not considered liquid propellants for the purpose of this pamphlet. Those dual purpose hydrocarbon fuels which are used in both missiles/rockets/ammunition and in ships/aircraft/vehicles are considered liquid propellants only when the fuel is actually charged into the missile/rocket/ammunition.

Loading density
Quantity of explosive per unit volume usually expressed in pounds per cubic foot (lbs/ft^3). As applied to underground storage facilities, there are two types of loading densities used in Q-D calculations:

a. Chamber loading density is based on the NEW within an individual storage chamber and the volume of the chamber (VCH).

b. The calculation of airblast peak pressures and IBDs for explosions in underground storage facilities is based on the shock-engulfed volume (VE) of the facility. This is the total volume filled by the expanding gases at the time the blast front reaches the point of interest (e.g., the entrance to an adjacent chamber). It includes volumes in any direction that the gases can enter, to a distance from the explosion source that equals the distance from the source to the point of interest. For IBD, the point of interest is the tunnel opening.

Loading docks
Facilities, structures, or paved areas, designed and installed for transferring ammunition and explosives between any two modes of transportation.

Lunchroom
Facilities where food is prepared or brought for distribution by food service personnel. It may serve more than one PES. A breakroom in an operating building may be used by personnel assigned to the PES to eat meals.

Magazine
Any building or structure, except an operating building, used for the storage of ammunition and explosives.

Magazine distance
The minimum distance permitted between any two magazines depending on the type of magazine and the class/division quantity of explosives and ammunition involved; the type and quantity of explosives requiring the greater distance will govern the magazine separation. Also called "Intermagazine Separation."

Magazine, earth-covered, nonstandard
All earth-covered magazines which are not constructed in accordance with DDESB approved drawings.

Marshalling yard
A port, point or location away from the congestion of a port facility where a unit or activity accounts for or assembles all their equipment and prepares for onward movement.

Mass-detonating ammunition/explosives
Ammunition or explosives, almost all of which can be expected to explode virtually instantaneously when a small portion is subjected to fire, to severe concussion or impact, to the impulse of an initiating agent, or to the effect of a considerable discharge of energy.

Maximum credible event
In hazards evaluation, the maximum credible event from a hypothesized accidental explosion, fire, or agent release is the worst single event that is likely to occur from a given quantity and disposition of ammunition and explosives. The event must be realistic, with a reasonable probability of occurrence considering the explosion propagation, burning rate characteristics, and physical protection given to the items involved.

Military munitions
All ammunition products and components produced or used by or for the U.S. Department of Defense or the U.S. Armed Services for national defense and security, including military munitions under the control of the Department of Defense, the U.S. Coast Guard, the U.S. Department of Energy, and National Guard personnel. The term military munitions includes: confined gaseous, liquid, and solid propellants, explosives, pyrotechnics, chemical and riot control agents, smokes, and incendiaries used by DOD components, including bulk explosives and chemical warfare agents, chemical munitions, rockets, guided and ballistic missiles, bombs, warheads, mortar rounds, artillery ammunition, small arms ammunition, grenades, mines, torpedoes, depth charges, cluster munitions and dispensers, demolition charges, and devices and components thereof. Military munitions do not include wholly inert items, improvised explosive devices, and nuclear weapons, nuclear devices and nuclear components thereof. However, the term does include non-nuclear components of nuclear devices, managed under DOE's nuclear weapons program, after all required sanitizing operations under the Atomic Energy Act of 1954, as amended, have been completed.

Military pyrotechnics
Ammunition manufactured specifically for use as signals, illuminants, and like items.

Misfire
Failure of a component to fire or explode following an intentional attempt to cause an item to do so. (See dud.)

Module
A barricaded area comprised of a series of connected cells with hard surface storage pads separated from each other by barricades.

Navigable streams
Those parts of streams, channels, or canals capable of being used in their ordinary or maintained condition as highways of commerce over which trade and travel are or may be conducted in the customary modes, not including streams that are not capable of navigation by barges, tugboats, and other large vessels unless they are used extensively and regularly for the operation of pleasure boats.

NEQ
Net explosive quantity expressed in kilograms.

NEW
Net explosive weight expressed in pounds.

Noncombustible
Not burnable in the ordinary sense of the word.

Non-armored
A vehicle or site that has no design protective features. For example an ISO container would be considered non-armored for Q-D purposes.

Non-DOD component
Any entity (government, private, or corporate) that is not a part of the Department of Defense.

Normal maintenance
Work performed on ammunition to prevent deterioration and to correct minor defects not requiring renovation or major modification operations.

Process steam
Steam that is in direct contact with explosives or which, in case of equipment failure, would exhaust directly into contact with explosives or explosives vapors.

Operating building
Any structure, except a magazine, in which operations pertaining to manufacturing, processing, handling, loading, or assembling of ammunition and explosives are performed. or explosion.

(1) Elimination or positive control of ignition and initiation stimuli.

(2) Sufficient distance or barricades to protect from blast or fragments.

(3) In those areas of facilities where exposed thermally energetic materials are handled that have a high probability of ignition and a large thermal output as indicated by hazard assessments, a fire detection and extinguishing system that is sufficiently quick-acting and of adequate capacity to extinguish potential flash fires in their incipient state will protect both personnel and property. Design and installation of the system must maximize speed of detection and application of the extinguishing agent.

(4) In ammunition operational areas where it is essential for personnel to be present, and the hazard assessment indicates that an in-process thermal hazard exists, use of thermal shielding between the thermal source and personnel is an acceptable means of protection. If shields are used, they shall comply with MIL STD 398. If shielding is not possible, or if that provided is inadequate for protection of exposed personnel, including their respiratory and circulatory systems, augmentation with improved facility engineering design, personnel protective clothing and equipment may be necessary.

(5) Thermal protective clothing must be capable of limiting bodily injury to first degree burns (0.3 calories per square centimeter per second with personnel taking turning-evasive action) when the maximum quantity of combustible material used in the operation is ignited.

(6) Protective clothing selected must be capable of providing respiratory protection from the inhalation of hot vapors and toxicological effects when the hazard assessment indicates adverse effects would be encountered from the inhalation of combustion products.

(7) Personnel hazards from glass breakage can be minimized by means such as building orientation and/or keeping the number of exposed glass panels and panel size to a minimum. When window panels are necessary and risk

assessment determines a glass hazard will be present, blast resistant windows must be used. The framing and/or sash of such panels must be of sufficient strength to retain the panel in the structure.

Pier
A landing place or platform built into the water, perpendicular or oblique to the shore, for the berthing of vessels.

Positive control
At a burning site, this is a means to prevent items, energetic material, or embers from being ejected to a place where they could cause injury or damage.

Potential explosion site
The location of a quantity of explosives that will create a blast, fragment, thermal, or debris hazard in the event of an accidental explosion of its contents.

Practice ammunition
Ammunition or ammunition components used for training. Practice ammunition simulates a service item in weight, design, and ballistic properties. A practice round may be inert or have a small quantity of explosive filler, such as black powder, used as a spotting charge.

Primary girdle
A ground loop (counterpoise) earth electrode subsystem which is connected to the lightning protection subsystem at former U.S. Navy installations.

Prohibited area
A specifically designed area at airfields, seadromes, or heliports in which all ammunition and explosives facilities are prohibited.

Propellant, solid
Explosives compositions used for propelling projectiles and rockets and to generate gases for powering auxiliary devices.

Public traffic route
Any public street, road, highway, navigable stream, or passenger railroad (includes roads on a military reservation that are used routinely by the general public for through traffic).

Pyrotechnic material
The explosive or chemical ingredients, including powdered metals, used in the manufacture of military pyrotechnics.

Quality assurance specialist (ammunition surveillance)
Department of the Army civilians that function in the ammunition surveillance program at DOD installations, activities, and commands that receive, store, maintain, issue, use, and dispose of ammunition.

Quantity-distance
The quantity of explosives material and distance separation relationships that provide defined types of protection.

Quay
A marginal wharf or solid fill.

Ready ammunition storage
A location where ammunition is stored for near term tactical or training use. Generally, ready ammunition storage locations will supply one or more armament pads.

Remote operation
An operation sufficiently hazardous such that special protection to personnel is required. Protection is provided by distance, protective construction (shielding, barricades, etc.) or both.

Renovation
That work performed on ammunition, missiles, or rockets to restore them to a completely serviceable condition; usually involves the replacement of unserviceable or outmoded parts.

Restricted area
Any area, usually fenced, at an establishment where the entrance and egress of personnel and vehicular traffic are controlled for reasons of safety.

Risk
The product of the probability or frequency and the expected damage or consequences

Risk acceptance
The practice of having the proper authority to review risks for acceptability.

Risk assessment
The evaluation of the risk associated with an activity which may include one or more analysis methodologies.

Risk decision
The decision to accept or not accept the risks associated with an action made by an individual responsible for performing that action.

Risk management
The practice of assessing risk and thereafter accepting the risk based on a consistent logic.

Rock strength
Strong, moderately strong, and weak rock are designators which provide a general classification of rock types for siting underground storage facilities. Classification of a rock body into one of these three rankings involves the rock's density, unconfined compressive strength and seismic velocity as specified in Corps of Engineers definitive design drawing number DEF 421-80-04.

Rocket
A motor which derives its thrust from ejection of hot gases generated from propellants carried within the motor casing.

Rocket motor
That portion of the complete rocket which is loaded with propellant.

Runway
Any surface on land designated for aircraft takeoff and landing operations, or a designated lane of water for takeoff and landing operations of seaplanes.

Safety shoes
Specifically designed footwear of four general types identified as—

a. Industrial safety shoes with hard toes or other resistive physical characteristics which met the requirements of ANSI Standard Z41.1–1967.

b. Sparkproof safety shoes (with hard toes) containing no exposed metal, for use in locations where friction sparks are hazardous and which comply with MIL-S–41821F.

c. Conductive sole safety shoes (with hard toes) used where static electricity would be hazardous and which comply with MIL-S–3794D.

d. Electrical hazard shoes (with hard toes) designed for protection against electrical shock and which comply with MIL-S–3794D and ANSI Z41.1–1983.

Scuttling site
An area of water specifically designated for positioning a ship for its flooding or sinking under emergency conditions.

Secondary girdle
A ground loop (counterpoise) earth electrode subsystem which is connected to all grounding subsystems except the lightning protection subsystem at former U.S. Navy installations.

Semifixed ammunition
Ammunition loaded into a weapon in one operation and whose cartridge case is not firmly attached to the projectile so that the propelling charge may be adjusted for zone firing.

Service line
Electrical lines supplying individual or unique installation locations.

Service magazine
A building of an operating line used for the intermediate storage of explosives materials.

Ship or barge units
All explosives within a line encompassing the ship or barge being loaded, the space on the pier for spotting of freight cars and trucks, and the space in the water for barges which may be working the ship or barge.

Simultaneous detonation
Detonation of separated quantities of explosives of ammunition occurring so nearly at the same time that the effect on the surroundings is the same as if the several quantities were not separated and were detonated en masse.

Single-chamber storage site
An excavated chamber with its own access to the natural ground surface not connected to any other storage chamber.

Sling out area
The loading of A&E into cargo nets for transportation beneath a helicopter for resupply of units not accessible by ground transportation or when time or security is a critical factor.

Small arms ammunition
Ammunition for small arms; for example, all ammunition up to and including 20mm.

Spall
Spall refers to pieces of a material (and the process by which they are formed) that are broken loose from the surface of a parent body by tensile forces that are created when a compression shock wave travels through the body and reflects from the surface. For underground storage, spall normally refers to the rock broken loose from the wall of an acceptor chamber by the shock wave transmitted through the rock from an explosion in a nearby donor chamber.

Standard igloo magazine
An earth-covered, arch-type magazine with or without a separate door barricade, constructed according to an approved standard drawing identified in chapter 8.

Static missile battery
Deployed ground-based missiles meant to be employed in a non-mobile mission for offensive or defensive purposes.

Static test stand
Locations on which liquid propellant engines or solid propellant motors are tested in place.

Storage compatibility
A relationship between different items of ammunition, explosives, and other dangerous materials whose characteristics are such that a quantity of two or more of the items stored or transported together is no more hazardous than a comparable quantity of any one of the items stored alone.

Substantial dividing wall
An interior wall designed to prevent simultaneous detonation of quantities of explosives on opposite sides of the wall.

Support facilities
Ammunition and explosives storage or operations that support solely the functions of tactical or using units as distinguished from storage depots or manufacturing facilities.

Surveillance
The observation, inspection, investigation, test, study, and classification of ammunition, ammunition components, and explosives in movement, storage, and use with respect to degree of serviceability and rate of deterioration.

Surveillance workshop
A special building equipped to permit all normal ammunition surveillance inspections.

Suspect truck and car site
A designated location for placing trucks and railcars containing ammunition or explosives that are suspected of being in hazardous conditions. These sites are also used for trucks and railcars that may be in a condition that is hazardous to their contents.

Tactical facilities
Prepared locations with an assigned combat mission, such as missile launch facilities, alert aircraft parking areas, or fixed gun positions.

Taxiway or taxilane
Any surface designated as such in the basic airfield clearance criteria specified by a DOD component publication or Federal Aviation Regulation.

Transient
A person with official business on a production line or operation but who is not routinely assigned to a specific limited location.

Transmission lines
Electrical lines supplying locations outside the installation uniquely, or in common with installation locations.

Unconfined burning
The burning of energetic material which have a means of venting without appreciable movement.

Utilities
Those services such as water, air, steam, sewage, telephone, and electricity necessary to the operation of an establishment.

Waiver
A written authority that permits a temporary deviation from a short term (5 years or less) mandatory requirement of U. S. Army Ammunition and Explosives Safety Standards.

Warhead
That portion of a rocket or guided missile containing the high explosives charge or other destructive agent.

Waste military munition
A military munition is a "waste" if it is either a solid or hazardous waste under regulations implementing RCRA, (42 U.S.C. Section 9601 et seq.) or defined as a waste under a DOD Component's formal written policies and procedures. In general:

a. An unused military munition is a solid waste when any of the following occurs:

(1) The munition is abandoned by being disposed of, burned, detonated (except during intended use), incinerated, or treated prior to disposal; or

(2) The munition is removed from storage in a military magazine or other storage area for the purpose of being disposed of, burned, or incinerated, or treated prior to disposal, or

(3) The munition is deteriorated or damaged (e.g., the integrity of the munition is compromised by cracks, leaks, or other damage) to the point that it cannot be put into serviceable condition, and cannot reasonably be recycled or used for other purposes; or

(4) An authorized military official has declared the munition a solid waste.

b. A used or fired military munition is a solid waste:

(1) When transported off range or from the site of use, where the site of use is not a range, for the purposes of storage, reclamation, treatment, disposal, or treatment prior to disposal; or

(2) If recovered, collected, and then disposed of by burial or landfilling either on or off a range.

(3) For purposes of RCRA section 1004(27), a used or fired military munition is a solid waste, and, therefore, is potentially subject to RCRA corrective action authorities under Section 3004(u) and (v), and Section 3008(h), or imminent and substantial endangerment authorities under Section 7003, if the munition lands off-range and is not promptly rendered safe and/or retrieved. Any imminent and substantial threats associated with any remaining material must be addressed. If remedial action is not feasible, the operator of the range must maintain a record of the event for as long as any threat remains. The record must include the type of munition and its location (to the extent the location is known). For further clarification see 40 CFR 266.202 under Definition of Solid Waste.

Weapons assembly area
An area established at an Airfield ASP to facilitate assembly/disassembly of ammunition required supporting the aviation mission.

Wharf
A landing place or platform built into the water or along the shore for the berthing of vessels.

Wharf yard
A yard that is close to piers or wharves in which railcars or trucks are held for short periods of time before delivery to the piers or wharves.

Section III
Special Abbreviations and Terms
This section contains no entries.

Index

This index is organized alphabetically by topic and by subtopic within a topic. Topics and subtopics are identified by paragraph number.

5 foot firebreak, 3–7d
50 foot firebreak, 3–7d

Accident reporting, 2–10
Airfield operations, 14–16
Air terminals
as part of a LPS, 12–2c
locations and heights, 12–5g
specifications and restrictions, Table 12–1
inspection, D–2
testing, D–3
Aircraft
damage at PTR, 5–6b
damage at IL (barricaded), 5–6c
damage at IL (unbarricaded), 5–6d
aircraft grounding, 6–10l, 7–13c
grounding inspection and test, Table 6–1
transport of ammunition by, 7–13
QD between, 14–15
Aisles
storage of MHE, 10–6
in munitions areas, 13–2g(3)
Ammunition
hazard and risk assessment requirements, 2–1
field safety, 2–9
accident reporting, 2–10
rod and gun clubs, 2–11
public displays, 2–13
hunting, 2–15
fire prevention, 3–1
posting fire symbols, 3–15
fire fighting instruction, 3–22
hazard class procedures, 4–1
storage principals, 4–3
mixed storage, 4–4
QD mixing rules, 5–2
underground storage, 5–13
preparation for shipment, 7–4
licensing, 9–1
LPS, 12–1a
storage, 13–1
stacking, 13–2g
loose rounds, 13–2h
damaged containers, 13–2h
outdoor storage, 13–3
inert ammunition, 13–6
unserviceable, 13–7
captured ammunition, wartime, 13–8, 15–2d
basic load holding area, 14–2
demilitarization, 17–1
maintenance, 18–1
electrical testing, 18–19
gaging, 18–20

Area map, 3–1d

Bale hooks, 2–5b
Barricades
for personnel protection, 2–4c
barricaded intraline, 5–6c
barricaded magazine distance, 5–6e
effectiveness at magazines, 5–6e(3)
door barricades, 5–8b(3)
open storage modules, 8–29
barricading and earth cover for magazines, 8–30b
location of, 8–30c
Basic load ammunition
storage compatibility, 4–4b
storage requirements, 14–7
overseas locations, 14–2
inspection, 14–6a
Black powder
storage compatibility, 4–5a(4)
sensitivity to static electricity, 6–10a(3)(a), 13–5e(7), 18–21c
collection methods, 8–27a
deterioration of, 13–1g
magazine storage, 13–2c(3), 13–5b
BLAHA
storage compatibility, 14–2c
exclusions, 14–2d
explosives limits, 14–2e
fire and chemical symbols, 14–7c
aviation operations, 14–12
Blast doors
underground storage, 5–13d(6)
as a substantial dividing wall, 8–8b
Blasting caps
protective container, 2–5a
storage compatibility, 4–5a(2)
training safety, 5–14d(3)
transportation, 7–5c
when stored with basic load, 14–2f(9)
theater storage, 15–2b(3)
Blocking and bracing
inadequate or improper, 7–12k
port operations, 11–1a
Blue flags
marking railcars, 7–12l
Bonding, electrical
when refueling vehicles, 3–7g(6)(b)
dispensing flammable material from a container, 3–7h(2)
conductive floors, 6–10c(3)
conductive belts, 6–10f(2)
at explosives facilities, 6–13a, 6–13d
inspection and test intervals, Table 6–1
steam and water lines, 8–24b
of dissimilar metals, 12–7a(3)
bonding strap size and material requirements, Table 12–1
test instruments, D–3

Captured ammunition

hazard classification, 7–3b(3), 15–1c(6)
segregation requirements, 15–1d(5)
field storage, 15–5n(1)
Celebrations
participation of Army personnel, 2–12a
commercial fireworks, 2–12b
Chutes
accumulation of static electricity, 6–10a(2)(b)
personnel safety, 8–10
Clean burning
diesel equipment, 10–5c
Cleaning
regular cleaning program, 2–6b
preferred method, 2–6c(3)
with flammable liquids, 3–7f
plugs removed from bombs or projectiles, 13–2i(4)(a)
ammunition items, 18–7
threads, 18–14
with dust collection systems, 18–21a
permissible rotational speeds for equipment, 18–27a(2)
shoes, C–4b
Cold light
devices, 6–7b
Collection systems, explosives
design and operation, 8–27d, 18–23
dry vacuum, 8–27d(3), 18–23b
wet systems, 8–27d(6)
propagation risk, 18–23a, 8–27d(2)
Colored smoke mixtures
composition, 13–23c
Combat configured load (CCL)
separation of lots, 14–7b
compatibility, 14–11a
Combustible vegetation
risk to munitions, 3–7c(1)
Commercial explosives
storage and handling, 16–1
use of, 16–2
Commercial fireworks on Army installations, 2–12b
Commercial-type loading tool 2–11b(8)
Compatible storage of basic load ammunition 14–2c
Compliance with Q-D standard
previously constructed facilities, 1–5
rod and gun clubs, 2–11
general requirements, 5–1
prior to new construction, 8–3f
licensing, 9–1c
at OCONUS locations, 14–1a
Concurrent operations
in the same structure, 2–4c
during renovation operations, 18–2d
during sand or shotblasting operations, 18–17a
Construction personnel, permissible exposure, 5–6b(5)(h)
Contingency operations
transport of incompatible loads, 7–5c
site plan exemption, 8–1c(1)(b)

wartime operations, 15–1a, 15–1b, 15–1c, 15–1d(10)
Continuity checks of explosives items, 2–7c(1)
Conveyors
belt specifications, 6–10f(1)(a), C–5
separation of explosive items, App F
Counterpoise
when to install, 6–14c(2)
description of, 6–14h

Daily inspection of vehicle, 7–6b
Damaged shipment
rail shipment, 7–12k
air shipment, 7–13d
water shipment, 7–14b
DD Form 626
vehicle inspection, general, 7–6a
inbound vehicles, 7–7a
outbound vehicles, 7–8
Dead ends in magazine areas, 8–16c
Decontaminating material for chemical group B agent, 13–12d
Decontamination method
group B agent, 13–15
group C agent, 13–21
Deflector plate for gasoline and diesel powered equipment, 10–3
Deluge system
for explosives operations, 3–21
testing, 13–21q
portable system, 13–21s
Demilitarization
operator protection, 2–7c(1)
risk assessment, 3–21a(1)
required blast overpressure protection, Table 5–8
LPS requirement, 12–3b
general precautions, 17–3a
new technologies, 17–6
Diesel powered required safety equipment, 10–3
Dissimilar hazards
collection of explosives dusts, 8–27
concurrent operations, 18–2d(2)
Distribution lines in explosives areas, 5–7n(2)
Door mats at the entrance of explosives operating buildings, 8– 16e
Drilling
of permanent display items, 13–6c(1)(c)
removal of stake-punch marks and setscrews, 18–3c(5)
rotational speed limitations, 18–27a
during machining of explosives, 18–28a
removal of drilling residue, 18–28k
Drivers
operation of vehicles loaded with explosives, 7–8f
commercial drivers, 7–8f
military drivers, 7–8f
request for safe haven, 7–9
Dynamite
military, 13–5c
commercial, 16–4
turning of commercial, 16–4c

turning of frozen, 16–4c

Earth cover
planting of trees and/or shrubs, 3–7c(4)
overgrazing by animals, 3–7c(5)
use for buried detonations, 5–7c(e)
when considered as a barricade, 5–8d(1)(b)
minimum depth, 5–8d(3)
composition, 8–30d(1)
Earth electrode subsystem
for elimination of static electricity, 6–10b
conductive floor bonding, 6–10c(3)(a)
as part of facility ground system, 6–13b
purpose of, 6–14
requirements for, 6–14a
design, 6–14b
grounding wells, 6–14c(3)
bonding requirements, 6–14d
inspection and test intervals, Table 6–1
LPS bonding, 12–5d
test and inspection procedures, Appendix B
EIDS ammunition
hazard classification, 4–1g, Table 4–1
characteristics, 4–2
Electric lighters in explosives areas, 3–2a(2)(b)
Electrical
transportation of electric detonators, 2–5a
fixtures in explosives areas, 2–6b(2)
heat producing devices in explosives areas, 3–7a
fires, 3–7j(4)
types of supply lines, 5–7n
in hazardous locations, 6–2f(1)
approved equipment, 6–3
service lines in explosives areas, 6–5
ground fault interrupter, 6–5c
electric motors in hazardous locations, 6–6
static electricity, 6–10
installation of electrical equipment, 8–26
electrical testing of ammunition, 18–19
Electromagnetic radiation (EMR)
low power solid state devices, 6–2f(3)
hazards, 6–15
Emergency destruction 15–9
Encroachment licensing, 9–1a
Exemptions for site planning, Table 8–1
Exhibitions for the public, 2–12
Existing infrastructure
handling ammunition during wartime, 15–1d(6)
use as field storage units, 15–5j
Expiration date
explosives licensing, 9–1a
pyrotechnics, 13–5g
Explosion proof lighting in storage magazines, 6–8
Explosives
hazard analysis and risk assessment, 2–1
personnel training requirements, 2–2
standing operating procedures, 2–3

handling, 2–5
housekeeping, 2–6
testing, disassembly and modification, 2–7
field safety, 2–9
accident reporting, 2–10
static and public displays, 2–13
hunting, 2–15
fire prevention, 3–1
fire symbols, 3–15
fire fighting, 3–22
hazard classification, 4–1
compatibility groups, 4–5
quantity distance, 5–1b
transportation, 7–1
licensing 9–1
storage, 13–1
commercial explosives, 16–3
demilitarization, 17–1
inspections app J
maintenance, 18–1
safety program management, app J
safety training, app J

Fences
firebreaks, 3–7d
within 6 feet of an explosives structure, 12–8b

Field safety for packaged and unpackaged ammunition, 2–9

Fire
risk assessment factor, 2–1a(6)
fire protection management, 3–1
personnel training, 3–3
drills, 3–4
exits, 3–5
alarms, 3–6
firebreaks, 3–7d
extinguishing agents, Table 3–1
extinguisher requirements, 3–8a
fire division symbols, 3–14b
posting fire symbols, 3–15
exceptions to posting fire symbols, 3–16
automatic sprinkler systems, 3–20
deluge systems, 3–21
fire fighting procedures involving explosives, 3–22
firewalls, 8–5c(1), 8–7
fire escapes, 8–11
in chemical group ’B’ magazines, 13–16
in chemical group ’C’ magazines, 13–9a(3), 13–22
in chemical group ’D’ magazines, 13–9a(4), 13–28

Firebreaks, requirements for, 3–7d

Firefighting
meeting and advising firefighters, 3–1c(5)
personnel training, 3–3
non DOD firefighters, 3–12c
guidance symbols, 3–14
procedures for chemical and toxic, 3–18

Flame arrester, use in refueling vehicles, 10–3a

Flame or spark producing devices

in magazine or explosives areas, 3–1g
separation for gasoline or diesel refueling, 3–7g(6)(c)
repairs on trailers, 7–7b(3), 11–5d(2), 14–4b
Flammable liquids
for cleaning, 3–7f
present in ammunition, 4–5a(9)
hydrocarbon fuels, 5–12a(2)(d)
in hazardous locations, 6–2a(2)(a)
open containers, 13–2i(5)(a)
use outside magazines, 13–2i(5)(b)
separation from explosive loaded vehicles, 14–5a
spray painting, 18–8a
Flammable storage
separation from explosives locations, 3–7h(3)
storage for flammables and paint, 18–8f
Flashlights and lanterns
use in buildings containing explosive, 3–1i
in hazardous locations, 6–7b
Flexible cords, 6–9
Floodlight systems 6–7a
Floors
cleaning with sweeping compound, 2–6c(1)
conductive floors, 6–10c
in explosives facilities, 8–6
visual inspection, C–2
electrical inspection, C–3
Forklifts
used for handling explosives, 2–5f
requirements for overhead guards, 10–1b
for use in earth covered magazines, 10–5c
storage in magazines, 13–2f(1)
Freezing and thawing
wet collection systems, 8–27d(6)
storage of bulk explosives in distilled water, 13–5d
ammunition stored on the ground, 15–5k(2)
Fuel
parking fuel service truck, 3–7g(3)
refueling vehicles, 3–7g(6)
bonding during refueling, 3–7g(6)(b)
grounding vehicles, 11–5f
separation, 14–19

Gates
in fence around explosives areas, 8–16b
fire symbols on gates, 14–7c
spills, 3–7g(6)(d)
Grass fires 3–22b
Grid
electrical, 5–7n(1)(a)
buried metal, 6–14
use in new construction, 6–14i(1)
air terminals, 12–4h(3)
Ground fault interrupters, requirements for new construction or renovation, 6–5c
Ground rods
for new construction or renovation, 6–14
requirements for LPS, 6–14g(1)(a)
inspection and test requirements, Table 6–1

minimum number, Table 6–2

Hand trucks
used to handle ammunition, 2–5f
electric, 10–1
transportation of primed items, 18–6
Handling explosives and munitions
precautions, 2–5
handling equipment, 10–1
of chemical munitions, 13–9d
during wartime, 15–1
commercial explosives, 16–1
Handloading
facility requirements, 2–11b
procedures, 2–11b(1)
Hazard analysis/Risk assessment
policy on existing facilities, 1–5
requirements, 2–1a
personnel qualifications for conduct of, 2–1c
for deluge systems, 3–21j
unlisted equipment, 6–3b(2)
prioritization of LPS repair, 12–5g
material in service magazines, 13–2h
new demilitarization technologies, 17–6c
machining of explosives, 18–28f
Hazard zones for toxic chemical agents, 5–9e(2)
Hazardous locations
classes, 6–2
special requirements, 6–2f
maintenance of equipment in hazardous locations, 6–2g
photographic lighting, 6–2h
listed equipment, 6–3a
unlisted equipment, 6–3b
electric motors, 6–6
permanent lighting, 6–8
static electricity dissipation, 6–10b
buildings, 8–6a(1)
Helicopter operations
landing areas, 14–12a
limitations, 14–12a(3)
High pressure closures for underground storage, 5–13d(9)
Host nation symbols, when applicable, 3–16b
Hot work permit for heat-producing equipment in magazines, 13– 2l(2)(c)
Housekeeping, 2–6
Humidification for prevention of static electricity, 6–10b(2)

Inert or empty ammunition
storage, 13–6a
identification, 13–6b, 13–6c
used for practice, 13–6c(1)(a)
Improved conventional munitions (ICM) storage requirements, 13–5a
Incendiary
storage compatibility group ’G’, 4–5a(7)
storage compatibility group ’J’, 4–5a(9)
QD safety criteria, 5–7f(1)(b)
underground storage limitations, 5–13f
sensitivity to static electricity, 6–10a(3)(a)

dust collection, 8–27a, 18–21c
bombs, 13–23b
special protective equipment, 13–25
Inhabited building distance (IBD)
fire involving explosives, 3–13b
for HD 1. 6 material, 4–2c(2)
expected effects, 5–6a(1)
liquid propellant, 5–12h
underground storage, 5–13h(3)
sandblasting in explosive areas, 18–17a
Inspection
of automatic sprinkler systems, 3–20c, 8–28
facility ground system and LPS components, 6–13c, 12–13
Government vehicles, 7–6a
inbound vehicles, 7–7a
outbound vehicles, 7–8
railcars, 7–12(1)
inert ammunition, 13–6d
personal protective equipment, 13–9g(3)
inert scrap components, 18–15b
Interim hazard classification 7–3
Intrinsic safety in hazardous locations, 6–2f(3)
Ionization for prevention of static electricity, 6–10b(3)

Leaking packages in railcars, 7–12e
Lighting system
security fences, 5–6c(3)g
photographic, 6–2h
portable, 6–7
permanent, 6–8
Lightning protection
arrestors, 6–5, 12–12a
LPS subsystem, 6–13b(4), 6–14g(1)(a)
loading of vehicles, 11–2b
vehicle holding area, 11–3a, 12–16
railheads, 11–4d
at demilitarization/disposal sites, 12–3b
integral system, 12–6a
catenary system, 12–6b
mast system, 12–6c
warning systems, 12–9
for empty facilities, 12–17
100 foot zone of protection, 12–1b, 12–5b, 12–5g, 12–6a
Liquid propellant
general requirements, 5–12
storage, 13–1e
Load protection lifting devices, 7–6c
Load stability
explosives loaded vehicles, 7–6d
blocking and bracing, 7–6d
Local telephone service
underground routing, 6–5b
surge protection, 6–5b

Magazines
fire fighting, 3–22b
service magazines, 5–4f, 5–6c(3)(i), 5–6d(3)(h), 13–2c(5)

siting requirements, 5–8
intermagazine distance, Table 5–6
electrical equipment, 6–1
barricades and earthcover, 8–30
empty magazines, 13–1i
storage of ammunition, 13–2
temperature control, 13–2e
preferred type, 13–2d
operations in magazines, 13–2i
operations outside magazines, 13–2j
repairs, 13–2l
storage of inert ammunition, 13–6a
approved for new construction, appendix G
Main service switch on battery-powered equipment, 10–2d
Maintenance involving welding on explosives loaded vehicles, 14– 4c
Matches
at handloading operations, 2–11b(3)
in explosives areas, 3–1g, 14–10a(2)
'strike anywhere' matches, 3–1h
Maximum amount of explosives, posting of limits, 2–4g
Military aircraft
parking areas, Table 5–19
operating regulation, 7–13a
permissible air shipments, 7–13b
non-military aircraft, 7–13c(6)
Mineral oil
for use in covering pyrotechnic mixtures, 2–6a(2)(b)
collection of scrap pyrotechnics, 18–21c
Minimum water supply, storage for firefighting, 3–9
Minor modifications required on existing facilities, 8–1c(2)
Missile separation, 14–18
Mixed storage
storage of ammunition with other materials, 4–3b
storage of compatible ammunition, 4–3d, 4–4
storage in modules, 8–29d(2)
Modification of explosives items, precautions, 2–7
Module storage
definition, 8–29b
limitations, 8–29b
ammunition in flammable outerpack, 8–29d(3)
Motor vehicle
transportation of ammunition, 2–9b
Government owned, 7–6a
inspection, 7–6a
inbound, 7–7a
outbound, 7–8

New construction
type of earth grounds authorized, 6–14
approved designs for new construction, 8–5, appendix G
structural grounds, 12–10
new storage magazines, 13–2b

Openings in fire walls, fire doors, 3–11
Operating support equipment powered by internal combustion engines, 3–7j
Operational shields
for use during testing, disassembly and modification, 2–7c

requirements, 18–3
when not applicable, 18–3c
at profile and alignment gaging operations, 18–20a
at assembly and crimping operations, 18–26
machining of cased explosives, 18–28d
munitions loading, 18–29
doors which function as operational shields, 18–29b
Operations permitted in magazines, 13–2i
Operations permitted outside magazines, 13–2j
Overhead guard
for forklifts, 10–1b
exceptions, 10–1b

Packing material
specifications, 2–5d
retention of, 2–9a, 15–1(10)
risk in aboveground magazines, 5–9b(4)
storage with explosives, 13–2f(1)
calculating weight, 15–5c
Paint and other flammable material, storage in explosives area, 3–7h
Permissible air shipment
by civil air, 7–13b
by military air, 7–13b
damaged shipment, 7–13d
Personal protective equipment
protective masks, 13–9g(1)
protective clothing and equipment, 13–9g(2)
storage and inspection, 13–9g(3)
for group 'B' chemical munitions, 13–12b
for group 'C' chemical munitions, 13–19a
sand or shotblasting operations, 18–16f
Personnel exposure
risk assessment factor, 3–21d(7)
during remote explosives operations, 5–7k(1)(a)
blast overpressure and fragments, 5–7k(1)(b)
allowable explosives limits at operating locations, 18–2b
during explosives machining operations, 18–28i
Photographic lighting in hazardous locations, 6–2h
Placarding
explosives loaded vehicles, 7–6e
host country requirements, 7–6e, 7–13a(2)
Portable deluge system components, 3–21s(2)
Portable lighting systems
floodlight systems, 6–7a
flashlights, 6–7b
lantern, 6–7b
miners cap lamps, 6–7b
Ports, 14–17
Prepositioned war reserve (PWR)
storage at basic load site, 14–3b, 14–3d
at overseas locations, 14–3b
Prefire plans, development of, 3–1c
Protection from moisture
wet collectors, 8–27d(3)
when using aluminum LPS conductors, 12–7a(4)
when standard storage magazines are not available, 13–1a
use of heating in magazines, 13–2e(2)

ventilation, 13–2k
Public demonstrations, 2–12
Pyrotechnics
preferred storage facilities, 13–5g
ventilation in storage, 13–2k
storage environment, 13–5g
use of heat sealing equipment, 18–12

Quantity-Distance (Q-D)
administrative areas, 5–7a
airfields, 5–10a
between loaded aircraft, 14–15a
burning areas, 5–7p
calculating mixed hazard/divisions, 5–2
classification yard, 5–7b
computations, 5–4
demolition ranges, 5–7c
electrical supply lines, 5–7n
heliports, 5–10
inert storage areas, 5–7d
interchange yards, 5–7e
loading docks, 5–7g
magazine orientation, 5–8
piers and wharf, 5–11
rail and truck holding areas, 5–7h
rail and truck inspection areas, 5–7i
recreational and training facilities, 5–7j
remote operations, 5–7k
storage tanks, 5–7l
transportation mode change location, 5–7o
underground storage layout, 5–13d
underground tanks and pipelines, 5–7m

Railcars
fires, 3–19a
propagation of explosives loaded, 5–3h
at interchange yards, 5–7e
inspection stations, 5–7i
inspection prior to unloading, 7–12i
railhead operations, 11–4
Railroad track
as earth electrode subsystems, 6–14, 6–14k
within 6 feet of an explosives facility, 12–8c
Range safety, app J
Refueling
within explosives areas, 3–7g(6)
within an inert storage building, 3–7g(6)(e)
explosives loaded vehicles, 3–7g(6)(b)
loaded aircraft, 7–13a(1)
grounding during refueling, 11–5f
during tactical situations, 14–5d
sand and shotblasting equipment, 18–17c
Remote controlled devices
for protection of personnel and property, 2–7c
design and testing, 2–7c(2)
Repairs to magazines
removal of building contents, 13–2l(1)

special requirements, 13–2l(2)
Repair by welding, 14–4c
Rockets, rockets motors, and missiles
safety devices, 2–9c
liquid propellants, 5–12a
on-post transport requirements, 7–10b(4)
storage facilities, 13–5i, 13–5i(2)(a)
loading on aircraft, 14–13f
electrical testing, 18–3b(8)
Roofs
construction requirements, 8–5c
installing hardware, 8–19c
repair, 13–2l(1)

Safe haven
requesting, 7–9
responsibility for cargo, 7–9
Safe separation distance
buried detonations, 5–7c(2)(e)
between EEDs and RF emitters, 6–15c
calculating, Table 6–4
reducing distance, 6–15d
conveyor spacing, 18–2c, appendix F
Salvaged propellant, spill cleanup, 2–11b(7)
Storage compatibility group (SCG)
SCG assignment, 4–3c, 4–5a
separate storage, 4–3d
mixed storage, 4–4a
storage of NATO standard ammunition, 15–2d(1)
commercial explosives, 16–3
requesting a SCG, 16–3g
Scuttling site
measuring distances, 11–6c(3)
location considerations, 11–6d(1)
Separate-loading projectiles
storage facilities, 13–2c(2)
removing/replacing grommets on apron, 13–2i(3)
storage requirements, 13–5f
performing maintenance, 18–2e(2)
rotational speeds during maintenance, 18–27b
Shaped charges
fragment distances, 5–5b(3)(a)
special storage considerations, 13–5h
Site plans
when required, 8–1a and 14–2
when not required, 8–1b
preliminary submission, 8–2a(1)
final safety submission, 8–2a(2)
review and approval, 8–3a
Skylights
protection at IBD, 8–17a
in explosive operating buildings, 8–17b
Soil erosion
use of vegetation, 3–7c(4)
use of sterilants, 3–7c(4)
Standing operating procedure (SOP)
hazard analysis, 2–1b

basic requirements, 2–3a, 2–3b
hazardous waste disposal, 2–6a(4)
testing, disassembly and modification, 2–7a
flammable liquids for cleaning, 3–7f
buried detonation, 5–7c(2)(e)
transportation of explosives, 17–3a
renovation operations, 18–2a(2)
Stacking
combustible material, 3–7k
exceptions on combustible material, 3–7l
in underground storage chambers, 5–13g(10)
in magazines, 13–2g
ventilation, 13–2k
permissible height, 15–5j(2)
Stacks
limited area for combustible material, 3–7k
of explosives, 5–4c
ammunition by lot number, 13–1b
height, 13–1b, 13–2g(1), 15–5j(2)
ventilation, 13–3c
QD to open stacks, 14–15f
firefighting, 15–2e
field storage unit (FSU), 15–5a
separation at FSUs, 15–5f
accessibility by MHE, 15–5h
Static electricity
generation of, 6–10a(1)
common sources, 6–10a(2), 6–10a(4)
sensitivity of explosives, 6–10a(3)(a)
garment removal, 6–10a(6)
dissipation, 6–10b
static grounds, 6–10b(1)(d)
humidification, 6–10b(2)
ionization, 6–10b(3)
conductive floors, 6–10c
footwear, 6–10d
spray painting, 6–10k
ordnance grounds, 6–11
instrument grounds, 6–12
Storage
general requirement, 13–1
lockers, 2–11b(5)
commercial fireworks, 2–12b
vegetation control, 3–7c(1)
POL storage, 3–7g(1), 15–2a(2)
flammable materials, 3–7h
firefighting water, 3–9
posting fire symbols, 3–15
principles, 4–3
mixed with dissimilar materials, 4–3b
storage compatibility groups, 4–3c, 4–5
mixed SCGs, 4–3d, 4–4, 4–5
inert storage, 5–7d, 13–6a
tanks, 5–7l
liquid propellant, 5–12a(1)
underground storage, 5–13, 12–3c

at hazardous locations, 6–2
preferred type, 8–5a, 13–2d, 13–5i(2)(a)
open storage, 8–29
storage of MHE, 10–6
chemical munitions, 13–1f
magazine storage, 13–2
temperature control, 13–2e
outdoor, 13–3, 13–9e
unserviceable ammunition, 13–7b
at BLAHAs, 14–2a, 14–7c(2)
basic load storage, 14–3, 14–8
field storage unit (FSU), 15–5
commercial explosives, 16–3c
termination of use of facilities, 13–29
waste military munitions, 19–1 thru 19–7
Substantial dividing walls (SDWs)
concurrent operations, 2–4c
for quantities up to 425 lbs, 5–4d
design, 8–5c
purpose, 8–8
use for vacuum collector, 8–27b(3), 18–23c
Symbol dimensions, half sized symbols, 3–14e

Telephones
in explosives storage areas, 13–2m
Tie-down straps for securing ammunition, 7–10c
Training ammunition
mixing with basic load, 14–3b
Transportation of hazardous materials
shipment by military conveyance, 7–1
inspection of government vehicles, 7–6a, 11–2e
inspection of inbound motor vehicles, 7–7a
driver response information, 7–8f
shipment by rail, 7–12b
leaking packages, 7–12e
air transportation, 7–13, 7–13a

Underground facilities, 3–23
Underground storage, 4–7, 5–13, fig 5–10, 6–3c, and 8–30e

Vegetation control
within explosives areas, 3–7c
purpose, 3–7c(1)
determining level of control, 3–7c(3)
use of animals, 3–7c(5)
Vehicle inspection
documentation, 7–6a
certification of inspection personnel, 7–2
Government vehicles, 7–6a
inbound motor vehicles, 7–7a
outbound motor vehicles, 7–8a
shipment of hazardous materials, 11–2e
prior to entering an explosives area, 14–10a(1)
Vehicle parking
distance to explosives facilities, 3–7i
fuel service trucks, 3–7g(3)
designated areas, 3–16e
combat aircraft, 5–6b(5)(g), 5–10a(3)(a)

privately owned, 5–6d(3)(k)
temporary parking of railcars, 5–7h(6)
fire symbols, 7–13a(2)
during road movement, 11–5b
Vehicle refueling
in proximity to explosives areas, 3–7g(6)
electrical bonding, 3–7g(6)(b)
fuel spill, 3–7g(6)(d)
exceptions, 3–7g(7)
grounding, 11–5f
tactical situations, 14–5d
air compressors and motor generators, 18–17c

War zone, 15–1b
Waste materials
mixing, 2–6a
container, 2–6a(2), 18–3h
disposal, 2–6a(4), 18–25

USAPA

ELECTRONIC PUBLISHING SYSTEM
OneCol FORMATTER .WIN32 Version 1.10

PIN:	074126–000
DATE:	06-26-00
TIME:	13:40:11
PAGES SET:	293

DATA FILE:	c:\armydocs\2000\march\P385-64\p385-64.fil
DOCUMENT:	DA PAM 385–64
DOC STATUS:	NEW PUBLICATION