SOLID WASTE MANAGEMENT

NAVFAC MO-213
AIR FORCE AFP 91-8
ARMY PAM 420-47

JUNE 1978

DEPARTMENTS OF THE ARMY, THE NAVY AND THE AIR FORCE

DISTRIBUTION

NAVY: (2 copies each unless specified otherwise)

SNDL A1 (ASN(I&L)only); A3 (OP-45 only); A4A (MAT-044P only); A5; A6; 27G; 39B; C4F6; C4F8 (Fall Brook only) C4F9 (Annapolis, Port Hueneme and New London only); C4F36; E3A (Washington only); FA6 (Bermuda, Brunswick, Cecil Field, Key West, Jacksonville, Virginia Beach only); FA7 (Guantanamo, Keflavik, Mayport, Panama Canal, Roosevelt Roads only); FA10; FA18; FA23 (Antigua, Barbados, Brawdy, Buxton, Eleuthera, Lewes, Turks Island only);

FA25; FB6; FB7 (Alameda, Barbers Point, Fallon, Lemoore, Oak Harbor, Miramar, North Island, Moffett Field only); FB10 (Adak and Midway only); FB21; FB26; FB31 (Oahu only); FB34 (Okinawa and Sasebo only); FB36 (Big Sur, Coos Head, Ferndale, and Pacific Beach only); FC3 (London only); FC4 (Naples and Sigonella only); FC5; FC7; FC12; FE1; FE2; FE4 (Edzell, Galeta Island, Homestead, Winter Harbor, Sabana Seca, Northwest, Sonoma and Todendorf only); FF1 (Washington only); FF4; FF6;

FF19 (Brooklyn, Long Beach, New Orleans, and Seattle only); FF38; FG1; FG2 (Adak, Balboa, Diego Garcia, Harold Holt, New Makri, Stockton, and Ponce only); FG3 (Cheltenham, Thurso and East Machias only); FG6 (Wahiawa and Norfolk only); FG11; FH3 (Beaufort only); FH25 (Philadelphia, Portsmouth, Virginia Camp Lejeune, Oakland, Newport, Great Lakes and Long Beach only); FH6 (Bethesda only); FH8; FKA6A1; FKA6A2; FKA6A3A;

FKA6A3B; FKA6A9; FKA6A12; FKA6A15; FKM8; FKM9 (Oakland only); FKM13; FKM15; FKN1; FKN2; FKN3; FKN5; FKN8; FKN10; FKP1A; FKP1B; FKP1E; FKP1J; FKP1M; FKP7; FKR1A; FKR1B; FKR3; FKR5; FR1; FR3; FR4; FT1; FT2; FT5; FT6; FT19 (San Diego only) FT22 (Virginia Beach only); FT28; FT31 (Bainbridge, Orlando, San Diego only); FT37; FT55; FT73; V5 (Camp Lejeune, Camp Pendleton, Twenty Nine Palms, Smedley Butler only); V8 (Parris Island only); V9; V12; V16; V23 (Albany only); FT78 (3 cys).

Additional copies are available from:
Naval Publications and Forms Center
5801 Tabor Ave.
Philadelphia, PA 19120

ARMY: To be distributed in accordance with DA Form 12-9A requirements for DA Pamphlets, Facilities Engineering.

Active Army: C
ARNG: D
USAR: C

AIR FORCE: F

FOREWORD

This publication is prepared as a solid waste management planning guide for Defense Department personnel who are responsible for waste disposal. The methodology addressed follows the most current and environmentally acceptable concepts developed for solid waste management. The principles prescribed conform to all requirements of the Solid Waste Guidelines promulgated by the Environmental Protection Agency. Requirements defined are consistent with all Department of Defense Directives on solid waste. Through dissemination of this information in a joint service format it is intended that uniformity in solid waste management will be introduced into all services. This guide serves as the sole solid waste manual for the Department of the Navy. For the Departments of Air Force and Army the information contained in this guide supplements existing waste disposal operations manuals. When information in this publication varies from that contained in other manuals, advice concerning interpretation should be obtained from:

1. Department of the Army - Office of the Chief of Engineers DAEN-FEU-S

2. Department of the Navy - Naval Facilities Engineering Command (Code 1042) or its geographic Engineering Field Division

3. Department of the Air Force - Directorate of Civil Engineering PREMM

Recommendations or suggestions for modification, or additional information and instructions that will improve the publication and motivate its use, are invited and should be submitted through appropriate channels to the addressees listed above.

By Order of the Secretaries of the Army, the Navy, and the Air Force

FRED C. WEYAND
General, United States Army,
Chief of Staff

PAUL T. SMITH
Major General,
United States Army,
The Adjutant General

D.G. ISELIN
Rear Admiral, CEC, U.S. Navy,
Commander, Naval Facilities
Engineering Command

JAMES J. SHEPARD
Colonel, USAF,
Director of Administration

DAVID C. JONES
General, USAF
Chief of Staff

TABLE OF CONTENTS

		Page
CHAPTER 1.	INTRODUCTION	1-1
1.1	PURPOSE	1-1
1.2	SCOPE AND CONTENT	1-1
1.3	CANCELLATION (NAVY, AIR FORCE, ARMY)	1-1
1.4	BACKGROUND	1-2
1.5	POLICY	1-2
1.5.1	Environmental Protection	1-2
1.5.2	Environmental Impact Assessment	1-3
1.5.3	Recycling and Resource Recovery	1-3
1.5.4	Occupational Safety and Health	1-3
1.6	RESPONSIBILITIES AND AUTHORITY	1-4
1.7	SOLID WASTE: THE TYPES, SOURCES, AND RATES OF GENERATION	1-4
1.7.1	The Types	1-4
1.7.2	Sources	1-4
1.7.3	Characteristics and Rates of Generation	1-5
1.8	MANAGEMENT ALTERNATIVES	1-8
1.8.1	In-House or Contract Services	1-8
1.8.2	Methods of Ultimate Disposition	1-8
CHAPTER 2.	COLLECTION AND STORAGE	
2.1	FIRST STEP IN SOLID WASTE MANAGEMENT SYSTEM	2-1
2.1.1	Source Separation	2-1
2.1.2	Collection and Storage	2-1
2.2	EQUIPMENT	2-2
2.2.1	Compactors	2-2
2.2.2	Balers	2-5
2.2.3	Pulpers and Shredders (Hammermills)	2-8
2.2.4	Containers and Container Storage	2-11
2.3	PROCEDURES BY SOURCE	2-12
2.3.1	Residential Areas	2-12
2.3.2	Commissaries and Exchanges	2-13
2.3.3	Clubs and Messing Facilities	2-14
2.3.4	Administrative Offices and Classrooms	2-15
2.3.5	Industrial Activities	2-16
2.3.6	Ship Wastes	2-17
CHAPTER 3.	COLLECTION AND TRANSFER	3-1
3.1	EQUIPMENT SELECTION	3-1
3.2	COLLECTION POINTS	3-1
3.2.1	Containers	3-1
3.2.2	Container Location	3-5
3.3	COLLECTION EQUIPMENT	3-9
3.3.1	Vehicle Requirements	3-9
3.3.2	Principal Types of Vehicles	3-11
3.3.3	Maintenance and Operation	3-16
3.4	PLANNING COLLECTION	3-18

TABLE OF CONTENTS (Continued)

		Page
CHAPTER 3.	COLLECTION AND TRANSFER (Continued)	
3.4.1	Equipment Selection and Crew Size	3-18
3.4.2	Combined Versus Separate Collection	3-18
3.4.3	Collection Frequency Requirements	3-18
3.4.4	Route Layout	3-19
3.4.5	Crew Collection Methods	3-20
3.4.6	Safety	3-20
3.5	TRANSFER OPERATIONS	3-22
3.5.1	With Transfer Stations	3-22
3.5.2	Without Transfer Stations	3-23
3.5.3	Transfer Hauling Alternatives	3-23
CHAPTER 4.	DISPOSAL	4-1
4.1	OPTIONS FOR DISPOSAL	4-1
4.2	RESOURCE RECOVERY	4-1
4.2.1	Resource and Energy Recovery Technology	4-2
4.2.2	Disposition of Resource Recovery Residues	4-12
4.3	INCINERATION	4-12
4.3.1	Guidelines and Regulations	4-13
4.3.2	Incineration Facilities	4-13
4.3.3	Incinerator Operation	4-18
4.4	SANITARY LANDFILLING	4-24
4.4.1	Guidelines and Regulations	4-24
4.4.2	Planning New Sanitary Landfills	4-27
4.4.3	Operation	4-28
4.4.4	Special Operations	4-40
4.4.5	Completing the Sanitary Landfill and Ultimate Site Use	4-44
CHAPTER 5.	WASTES REQUIRING SPECIAL HANDLING	5-1
5.1	TYPES OF WASTES	5-1
5.2	AVAILABLE TECHNOLOGY	5-1
5.2.1	Incineration	5-5
5.2.2	Pyrolysis	5-5
5.2.3	Land Burial	5-5
5.2.4	Landfill	5-6
5.2.5	Deep-Well Disposal (Injection)	5-6
5.2.6	Engineered Storage	5-6
5.2.7	Encapsulation	5-6
5.3	SOURCES OF ASSISTANCE	5-6
5.3.1	Waste Hazardous Materials	5-7
5.3.2	Process Wastes	5-7
5.4	GUIDELINES FOR SPECIFIC WASTES	5-9
5.4.1	Hospital Wastes	5-9
5.4.2	Pesticides and Pesticide Containers	5-10
5.4.3	Fluorescent Lamps	5-12

LIST OF ILLUSTRATIONS

Number	Title	Page
1-1	Military Installation Solid Waste Management	1-1
2-1	Typical Stationary Compactor Unit	2-4
2-2	Schematic of Stationary Compactor Operation	2-5
2-3	Typical Bag Compactor (or Extruder Compactor)	2-6
2-4	Typical Vertical Compactor	2-6
2-5	Typical Rotary Compactor	2-7
2-6	Typical Portable Baler	2-9
2-7	Typical Continuous Automatic Baler	2-9
2-8	Typical Wet Pulper	2-10
2-9	Galvanized Cans on Platform	2-13
3-1	Front-Loading Containers	3-2
3-2	Self-Loading Container and Rear-Loading Collection Vehicle	3-3
3-3	Self-Loading Container and Side-Loading Collection Vehicle	3-4
3-4	Typical Lugger-Box Container	3-4
3-5	Typical Roll-Off Container	3-6
3-6	Typical Enclosed-Compaction Type Containers	3-7
3-7	Front-Loading Compactor Vehicle Emptying a Self-Loading Container	3-12
3-8	Side-Loading Compactor Vehicle--Manual Loading	3-13
3-9	Typical Rear-Loading Compactor Vehicle	3-14
3-10	Barrel-Snatcher Compactor Vehicle	3-15
3-11	Typical Scooter-Type Satellite Collection Vehicles	3-15
3-12	Detachable-Body Module Compactor Vehicle (Waste is loaded from Opposite side.)	3-16
3-13	Hoist-and-Haul Vehicle without Container	3-17
3-14	Loading a Roll-Off Container onto a Tilt-Frame Truck	3-17
3-15	Routing by the String Method	3-21
3-16	Direct Transfer to Open-Top Trailer	3-24
3-17	Transfer to Stationary Compactor	3-24
3-18	Transfer Trailer Unloading	3-25
3-19	Compaction Transfer Trailer	3-26
4-1	Flow Path of Solid Waste from Generation to Disposition	4-2
4-2	Cost-Effective Thresholds of Recovery and Reuse of Refuse Resources (R^4) Systems	4-3
4-3	Typical Permanent Magnet-Type Separator	4-5
4-4	Typical Magnetic Pulley-Type Separator	4-5
4-5	Solid-Waste Compost Plant	4-6
4-6	Basket-Grate Incinerator	4-8
4-7	Rotary-Kiln Incinerator	4-9
4-8	Controlled-Air Incinerator (First Major Configuration)	4-10
4-9	Controlled-Air Incinerator (Second Major Configuration)	4-10

LIST OF ILLUSTRATIONS (Continued)

Number	Title	Page
4-10	Auger Combustor	4-11
4-11	Typical Incinerator Facility	4-15
4-12	Typical Incinerator Grates	4-17
4-13	Trench Method	4-29
4-14	Area Method	4-30
4-15	Ramp Method	4-31
4-16	Landfill Equipment	4-35
4-17	Steel-Wheeled Compactor	4-36
4-18	Cell Depth	4-36
4-19	Covering Solid Waste	4-37
4-20	Spreading and Compacting Solid Waste	4-39
4-21	Methods of Controlling Gas Movement	4-43
4-22	Completed Landfill	4-46

LIST OF TABLES

Number	Title	Page
1-1	Classes of Solid Wastes Generated at Military Installations	1-5
1-2	Sources of Waste Generation at Military Installations	1-6
1-3	Density of Solid Wastes at Military Installations	1-6
1-4	Waste per Resident per Day	1-6
1-5	Ship Waste per Man per Day	1-8
3-1	Comparison of Container Locations	3-8
4-1	Recommended Trench and Refuse Chart	4-30
4-2	Average Equipment Requirements	4-32
4-3	Equipment Selection Guidance for Multiple Unit Sites	4-33
5-1	Nonradioactive, High-Hazard Compounds	5-2
5-2	Hazardous Waste Treatment and Disposal Processes	5-4
5-3	Landfill Capabilities	5-7
5-4	Class I Landfill Site Criteria	5-8
5-5	Solutions for Rinsing Containers	5-12

BIBLIOGRAPHY . . . . . Bibliography - 1

GLOSSARY . . . . . Glossary - 1

APPENDIX A. LAWS, REGULATIONS AND DIRECTIVES PERTAINING TO SOLID WASTE MANAGEMENT . A-1

APPENDIX B. TECHNICAL REQUIREMENTS AND GUIDELINES FOR SOLID WASTE MANAGEMENT CONTRACTS . B-1

APPENDIX C. LIST OF MATERIALS WHICH REQUIRE SPECIAL PROCESSING PRIOR TO TRANSFER TO THE DEFENSE PROPERTY DISPOSAL SERVICE . . C-1

APPENDIX D. ORGANIZATIONS PROVIDING ASSISTANCE FOR RECYCLING AND RESOURCE RECOVERY PROGRAMS D-1

APPENDIX E. PARTIAL LIST OF DEPARTMENT OF DEFENSE ACTIVITIES PROVIDING ASSISTANCE WITH HAZARDOUS MATERIALS E-1

APPENDIX F. ALTERNATIVE SOLID WASTE SURVEY PLANS . . F-1

SUBJECT INDEX . . . . . Index - 1

CHAPTER 1. INTRODUCTION

1.1 PURPOSE. This manual provides information to assist personnel responsible for the management of military installation solid waste programs.

1.2 SCOPE AND CONTENT. The emphasis of this manual is on the management of municipal-type solid wastes normally generated by family and military personnel support, and industrial activities. Figure 1-1 shows the relationships between and the responsibilities for waste generation and disposal. A more complete discussion of sources, composition, and rates of generation of solid wastes is included in paragraph 1.7. Chapter 5 provides additional information on wastes that require special handling. Explosive, propellant, pyrotechnic, and radiological wastes are excluded from this manual since these wastes normally are the total responsibility of the generating activity. Additional information, including guidelines for solid waste contract services, is provided in the appendices. A bibliography of recommended additional material is also provided.

1.3 CANCELLATION (NAVY, AIR FORCE, ARMY). This publication cancels and supersedes Refuse Disposal, NAVDOCKS MO-213, 24 May 1961, and Change 1, July 1965. This publication serves as a supplemental pamphlet to Air Force Manual AFM 91-11 and a supplemental pamphlet to Army Regulation AR 200-1.

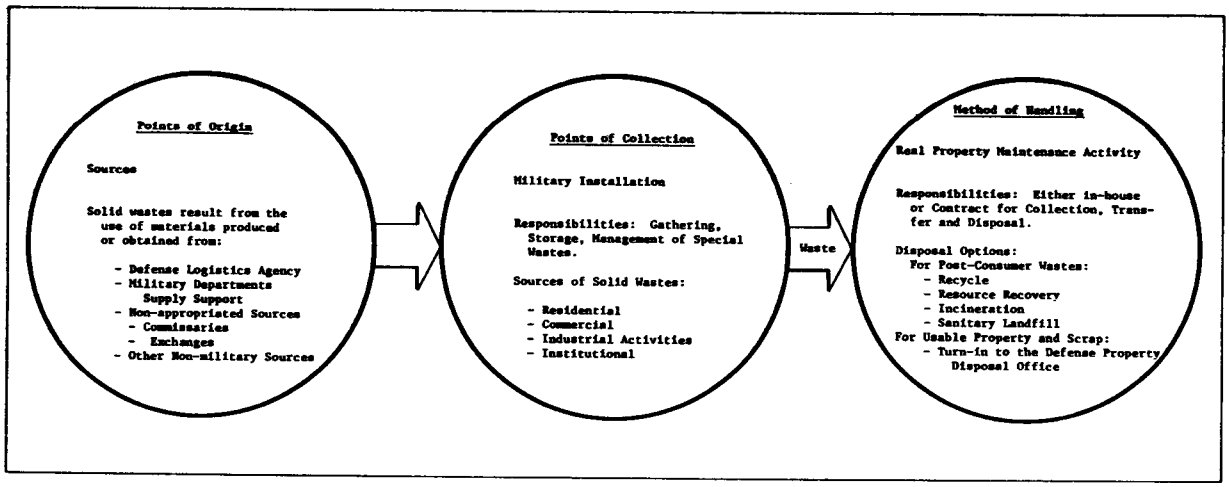

FIGURE 1-1
Military Installation Solid Waste Management

1.4 BACKGROUND. The national commitment to improve environmental quality has greatly expanded the need for effective management of solid wastes. Inefficient waste management practices used in the past, such as burning in open dumps, are no longer environmentally or economically acceptable. Problems in today's industrialized society, such as the growing volume of solid waste; air, water and land pollution; and rising materials costs, are being countered with programs for waste reduction, stringent regulations for environmental protection, and requirements for recycling and resource recovery. These new requirements are, however, often in conflict with well established habits of waste management. To comply with current and future requirements, innovative management is needed at all levels of responsibility. This manual is designed to facilitate improved solid waste management.

1.5 POLICY. The following paragraphs contain a summary of the various Federal laws, agency guidelines, Department of Defense and Military Department directives that pertain to solid waste management. This guidance applies to all solid waste management operations on military installations, regardless of where the wastes originated. This also applies to management of wastes away from the installation, if the installation has direct management control over the outside operation. Navy activities requiring special guidance should refer to the Engineering Field Divisions (EFD's) of the Naval Facilities Engineering Command. Air Force personnel will comply with regulations of AFR 19-1, and Army personnel will comply with the provisions of Chapter 5, AR 200-1.

1.5.1 Environmental Protection. The environment is considered to be a single, integrated system characterized by the continuous interaction of air, land and water. This system should be regarded as closed; nothing can be thrown away. Wastes must either be recycled and reclaimed, or confined or contained so they will not reappear in a pollutant form.

a. Solid waste management programs are designed as total systems which consider:

(1) The conservation of materials and resources.

(2) The most efficient and economical methods consistent with environmental protection.

b. Municipal or regional waste collection or disposal systems are used to the maximum extent possible.

c. The discharge or disposal of waste must not pollute groundwater or endanger public health or welfare of personnel.

d. The transportation and discharge to the sea of any solid waste collected ashore or from ships in port is prohibited.

e. Burning in open fires is not a method of disposal, except in limited situations as determined by health or safety considerations.

1.5.2 Environmental Impact Assessment. Solid waste management policies or practices, or the construction of facilities which significantly affect the quality of the environment, shall be assessed in accordance with the National Environmental Policy Act (NEPA), Council on Environmental Quality Guidelines, and Military Department regulations. Navy activities shall automatically file a Candidate Environmental Impact Statement (CEIS) in accordance with OPNAVINST 6240.3 for the development of new sanitary landfills. Air Force personnel will follow the procedures of AFR 19-2, and Army personnel will follow the procedures of AR 200-1.

1.5.3 Recycling and Resource Recovery. Department of Defense Directive 4165.60 promulgates the resource recovery and recycling program for solid and other waste materials. This program applies to the military departments and Defense Agencies world wide. This comprehensive program is designed to "preserve and protect the environment and to conserve natural resources through (1) reducing the amount of material wasted, and (2) recovering and recycling materials from solid and other waste products as an alternative to burial in landfills, burning in incinerators or otherwise disposing in a manner harmful to the environment (and economically wasteful)." Cost effectiveness of recycling and resource recovery purports that the net cost of such operations will be equal to or less than that of conventional incineration or sanitary landfill disposal. The Directive sets forth the following additional policies:

a. The quantities of solid or other waste materials shall be reduced at the source, wherever possible.

b. Military installations should participate in joint or regional systems which include civilian communities, if deemed advantageous.

c. Voluntary recycling programs are encouraged.

d. Contracts for solid and other waste material disposal services shall include provisions for recycling, wherever possible.

1.5.4 Occupational Safety and Health. Solid waste collection and disposal operations are very hazardous for personnel involved. The injury frequency rate for the solid waste

collection industry is approximately ten times greater than the average for all industrial workers. The high costs associated with injuries and accidents must be reduced. Therefore, solid waste management systems and procedures will comply with the standards promulgated pursuant to the Occupational Safety and Health Act and related Department of Defense directives. Air Force personnel will comply with ground safety practices in AFM 127-101 and other AF directives in the 127 series.

1.6 RESPONSIBILITIES AND AUTHORITY. The installation commander must ensure compliance with the policies and standards specified in this manual, hence each command echelon shall give appropriate command attention to solid waste management to ensure that effective management is achieved. Solid waste operations shall also comply with specific directives applicable to the various branches of service, as well as general Department of Defense directives. Directives initiated by other Federal agencies, such as the Environmental Protection Agency, shall be adhered to as applicable. Substantive local requirements should be followed where applicable. Before entering into any planning or agreement with civilian authorities, the installation commander should confer with legal assistance.

1.7 SOLID WASTE: THE TYPES, SOURCES, AND RATES OF GENERATION. Knowledge of the characteristics and amount of wastes generated is basic to selection and operation of solid waste management methods. Therefore, a qualitative and quantitative analysis of solid wastes is essential.

1.7.1 The Types. The classification for wastes generated at military installations, as depicted in Table 1-1, is based on the classes of property used for the control of material within the Department of Defense. The alternatives for waste disposal which are discussed in paragraph 1.8 are also consistent with the requirements for managing and controlling this property.

1.7.2 Sources. The activities that generate solid wastes within each functional area of a military installation are shown in Table 1-2. Certain wastes are not considered to be attributable to any particular functional area. These wastes include street sweeping residue, catch basin debris, waste from litter containers, and organic material from grounds maintenance. These wastes vary widely in nature and amount depending on the particular installation. For management purposes, these wastes will be disposed of as post-consumer waste.

TABLE 1-1
Classes of Solid Wastes
Generated at Military Installations

Class	Definition	Examples
Usable property	Commercial and military type property with value other than basic material content.	Jeeps, aircraft, ships, heavy construction equipment, electrical wiring and electron tubes.
Scrap	Personal property which appears to have no value except for salvage of its basic material content.	Film, metals, rubber, and textiles, generated in the normal course of military operations.
Post-consumer waste	All types of solid waste generated by stores, offices, clubs, cafeterias, mess halls, households, and other such non-manufacturing activities, and waste generated at industrial facilities such as office and packing wastes.	Household wastes, high grade papers refuse from barracks, messes, clubs, commissaries, exchanges and other sources.

1.7.3 Characteristics and Rates of Generation. The information presented in Table 1-3 is for typical installations. Data for individual situations may vary widely depending on local conditions, practices, and equipment used. Densities of the uncompacted solid waste generated by various military installations are included in Table 1-3 (these densities are listed in order of magnitude only).

1.7.3.1 Family Housing. Table 1-4 shows the types and amounts of waste generated in family housing areas per resident per day.

1.7.3.2 Commissaries and Exchanges. The bulk of waste generated at commissaries and exchanges is clean, high quality,

TABLE 1-2
Sources of Waste Generation at
Military Installations

Functional Area	Generating Activities
Residential	Family Housing Bachelor Quarters
Commercial	Commissaries Galleys and Mess Halls Exchanges Clubs Medical Facilities Administration and Class-rooms Routine and Preventive Main-tenance
Industrial Activities	Ship, Aircraft and Vehicle Overhaul, Conversion and Repair Logistic Support

TABLE 1-3
Density of Solid Wastes at Military Installations

Type Installation	Density of Uncompacted Solid Waste
Administration	47 - 56 kgs/cu m (80 - 95 lbs/cu yd)
All Installations	47 - 59 kgs/cu m (80 - 100 lbs/cu yd)
Family Housing	53 - 65 kgs/cu m (90 - 110 lbs/cu yd)
Ship Yards	59 - 74 kgs/cu m (100 - 125 lbs/cu yd)

Source: National Sanitation Foundation, Standard No. 13 for Refuse Compactors and Compactor Systems, March 1973.

TABLE 1-4
Waste per Resident per Day

Waste	Average Quantity per Resident per Day
Paper	0.8 kg (1.8 lbs)
Garbage	0.4 kg (0.8 lb)
Glass	0.1 kg (0.3 lb)
Metal	0.1 kg (0.3 lb)
Other	0.05 kg (0.1 lb)
Total	1.5 kgs (3.3 lbs)

corrugated containers and is excellent material for resale or recycling. A larger exchange will produce as much as 18.1 metric tons (20 tons) of corrugated waste per week.

1.7.3.3 Bachelor Quarters. Personnel living in bachelor quarters produce approximately 0.1 kilogram (0.2 pound) of solid waste per man per day, consisting of a large percent of paper and beverage cans.

1.7.3.4 Mess Facilities. Wastes from galleys and mess halls consist of paper, plastic wrap, cans, bottles, and food preparation trimmings exclusive of bones and fat. Wet garbage is generally disposed of in the installation sanitary sewer system through garbage grinders, while grease, bones and fat are collected separately and sold.

1.7.3.5 Administration and Classrooms. Solid wastes generated from offices, administrative facilities, and classrooms consist mainly of paper. The average production rate for refuse is 0.7 kilogram (1.5 pounds) per person per day. This rate pertains only to personnel with offices in the building, and includes the student population.

1.7.3.6 Routine and Preventive Maintenance. This category includes automotive, vehicular, and aviation repair and maintenance activities. The solid wastes generated from these facilities consist primarily of paper and cardboard, along with some quantities of nonreusable wooden crating and packaging materials. Oils and greases generated in these facilities are handled separately, while metals and broken parts are generally segregated from the solid waste stream and disposed of as scrap.

1.7.3.7 Conversion and Repair of Ships, Aircraft, and Vehicle Overhaul. These wastes are highly variable in quantity and nature, consisting mainly of metals and other materials used in industrial activities. These wastes are, therefore, treated as recyclable scrap.

1.7.3.8 Medical Facilities. The principal wastes from hospitals and dispensaries include garbage, paper, and trash; surgical, laboratory, and autopsy wastes; and non-combustibles such as cans and bottles. The range of weight of these wastes is 1.6 to 3 kilograms (3.5 to 6.5 pounds) per capita per day. Many of these wastes present physical, toxicological, or pathological hazards. Appropriate guidelines for handling these materials are provided in Chapter 5.

1.7.3.9 Ship Wastes. Table 1-5 shows the average solid waste generation rate by category, per man per day for ships in port. Ships coming into port will also have stored aboard

TABLE 1-5
Ship Waste per Man per day

Waste	Average Quantity per Man per Day*	
Paper	0.4 kg	(1.2 lbs)
Garbage	0.8 kg	(1.8 lbs)
Glass, Ceramic	0.05 kg	(0.1 lb)
Metal	0.1 kg	(0.2 lb)
Other	0.2 kg	(0.5 lb)
Total	1.7 kgs	(3.9 lbs)

*These are orders of magnitude only. A waste characterization study is required if more precise data are needed.

the trash generated while the ship was transiting the prohibited zone and the garbage generated while transiting the contiguous zone.

1.8 MANAGEMENT ALTERNATIVES. Selection may be made from a wide variety of methods, procedures, and equipment in order to develop the best system of solid waste management at each installation. The selection of the best alternatives for solid waste management at each installation can require a survey to obtain data needed as a basis for decision. Care must be exercised in the selection of the survey method as the survey costs can exceed any economic benefits. Guidance in selecting a survey method is available in the R^4 Decision Guide, NESO 20.2-008; and the Logistics Management Institute Report, Measurement and Description of the DOD Solid Waste Problem, Project 8 (Interim Report) of March 1976, excerpts of which have been included as Appendix F. The basic decision points are discussed in the following paragraphs.

1.8.1 In-House or Contract Services. The decision to select either in-house or contract operations for all or portions of the installation's solid waste management is determined by operational requirements, economics, types of waste, facilities available, and environmental considerations. In-house operations have the advantages of increased flexibility, control, and responsiveness of operations. This method is particularly desirable at remote or isolated locations, where contract capability is not readily available. Guidelines for contracting solid waste management services are provided in Appendix B.

1.8.2 Methods of Ultimate Disposition. The ultimate disposition of wastes that have been collected is dependent upon

the type of material and various local factors. Disposal alternatives vary for usable material and scrap, and post-consumer wastes. Priority should be given to recycling and beneficial use possibilities.

1.8.2.1 Disposition of Scrap and Usable Material. These materials will be processed in accordance with the Defense Disposal Manual, DOD 4160.21M. A list of materials requiring processing prior to turn-in to the Defense Property Disposal Office (FPDO) is contained in Appendix C. Certain excessed usable military items, such as ammunition and firearms, are required by law to be demilitarized and sold as scrap if further use within the military is not planned. Procedures for demilitarization are contained in the Defense Demilitarization Manual, DOD 4160.21-M-1. The installation has the following responsibilities with respect to scrap and usable materials:

a. Collection.

b. Segregation of salable materials.

c. Storage of salable materials.

d. Loading of material, if necessary, on contractor vehicles.

e. Reporting of salable materials to the Defense Property Disposal Office.

f. Disposal of residue from segregation efforts.

1.8.2.2 Disposition of Post-Consumer Wastes. The options for disposal are:

a. Recycling and resource recovery

(1) Sale through the Defense Logistics Agency (DLA)

(2) Use as a fuel or fuel supplement

(3) Local reuse of recovered waste materials

(4) Joint or separate efforts by contractors handling solid and other waste material to recover recyclable materials

(5) Participation in a joint or regional resource recovery program operated by the civilian community.

b. Burial in a sanitary landfill

These methods may be used alone or in combination, depending on local conditions. The following chapters address these three options in detail.

CHAPTER 2. COLLECTION AND STORAGE

2.1 FIRST STEP IN SOLID WASTE MANAGEMENT SYSTEM. The collection and storage of waste is a most important step in solid waste management. Once generated, wastes must be properly handled and segregated to simplify collection, resource recovery, incineration or disposition in a sanitary landfill. Proper handling is also required to maintain safe and healthful conditions until wastes are collected and removed for disposal. Collection and storage of usable materials and scrap are normally the responsibility of the activity generating the wastes, and collection and storage of post-consumer solid wastes are normally the responsibility of the installation engineer. Wastes are removed to a collection point or area which is usually designated by the installation engineer. Further discussion of collection points is made in Chapter 3, paragraph 3.2.

2.1.1 Source Separation. Pre-collection separation is the segregation, by the generating activity, of relatively homogeneous and concentrated waste materials to prevent their mixing with the general waste stream. For example, cardboard and paper with a high value in an uncontaminated form or materials requiring special handling, such as hazardous or infectious wastes, should be separated at their source. Source separation is useful because of the following:

a. Materials separated for recycling are conserved.

b. The costs and technological effort of final separation at a resource recovery facility are minimized.

c. Control over hazardous or infectious materials is maintained with subsequent improvement in safety and environmental protection.

Each generating activity should be responsible for implementing a system for source separation. Each generating activity should coordinate plans for such systems with the installation engineer to avoid needless duplicate effort. The installation engineer should follow the guidance published by the appropriate element of DOD.

2.1.2 Collection and Storage. All solid wastes should be collected and stored so that they do not create health and/or environmental hazards, become sources of odors, create fire hazards, provide food and/or harborage for flies and rodents, or pose a litter problem. All food wastes shall be stored in covered containers which are non-absorbent, leakproof, durable, easily cleaned and designed for safe handling.

Containers shall be adequate in size and numbers to contain the wastes produced between collections. Containers shall be kept clean to avoid nuisance odors as well as to retard the harborage of flies and rodents. When serviced, storage containers should be emptied completely of all solid waste. Bulky solid wastes such as discarded refrigerators and freezers (white goods) should be properly prepared for storage so that they do not create safety or health hazards. All doors should be removed from refrigerators and freezers, and steps should be taken to prevent the accumulation of litter and water.

2.1.2.1 Equipment and Materials Requirements. Equipment used in collecting and storing solid wastes should meet the following specifications:

a. Reusable waste containers, which are emptied manually, should not exceed 130 liters (35 gallons) in capacity. A filled container should not weigh more than 34 kilograms (75 pounds). The container should be designed to permit the collector to handle it without coming into physical contact with its contents. The container should be leakproof; designed for easy emptying; and constructed of non-combustible or self-extinguishing, non-absorbent, corrosion-resistant materials. The interior of the container should be smooth to facilitate cleaning. There should be no sharp edges on the container or its handles. There should be at least two handles, bales or other suitable lifting devices on each container. A tight fitting cover with a handle should also be provided.

b. Single-use (disposable) paper and plastic bags should meet the standards set by the National Sanitation Foundation (NSF Standard 31; April 1970). Disposable plastic bags should have a minimum thickness of 0.05 millimeter (0.002 inch) and should not contain polyvinyl chloride (PVC) if they are to be disposed of by incineration.

c. Stationary compactors should meet the sanitation standards set by the National Sanitation Foundation. They should not be used for semi-liquids or wastes with a high concentration of food. Refer to NSF Standard 13; March 1973.

2.2 EQUIPMENT. Equipment available includes compactors, balers, shredders, and pulpers. Compaction equipment used must meet the safety requirements prescribed by the American National Standards Institute. This equipment is used to break up and/or reduce the volume of waste.

2.2.1 Compactors. In many facilities, on-site processing may be used to reduce the volume of solid waste. The use of trash compactors is one alternative. Compactors can reduce

aste volume by as much as ten to one. Most compactors consist of a container and a compacting ram. Compactors are limited as to the types of solid waste they can handle efficiently. While trash and loose refuse can be taken care of effectively, wastes with tar, sludges, or other materials having high moisture content are difficult to handle. Frequently, drainage to sanitary sewers is required in the vicinity of the compactor to dispose of liquids from compressed wastes. Compaction of wet wastes creates odor problems especially if there is enough water in the wastes to cause drainage after compaction. Wet wastes should be kept out of compactors. Four types of compactors are discussed in the following paragraphs.

2.2.1.1 Stationary Compactors. Stationary compactors are frequently referred to as stationary packers. These units have a hydraulically operated vertical or horizontal compacting ram. Wastes are fed into a receiving hopper, and when actuated manually, optically, or by sonic means, the ram compresses the wastes into a steel container (Figures 2-1 and 2-2). The leading end of the container is hinged in a manner similar to a tailgate to swing fully open to permit dumping. When a container is full, the compactor ram is withdrawn, and the container is winched onto a tilt-frame hoist truck to be hauled away. (Collection vehicles and equipment are discussed in Chapter 3.) An empty container is then strapped or locked to the compactor, and the entire unit is again ready for operation. Since stationary compactors are made by a large number of producers, it is difficult to compare their technical and performance characteristics. The National Solid Waste Management Association (NSWMA) publishes an annual list of ratings for apartment/institutional and commercial/industrial stationary compactors. The majority of compactors used in industrial applications are stationary units.

2.2.1.2 Bag Compactors. Bag compactors are currently available in a wide variety of types. Variations among types include horizontal or vertical ram; single, continuous or multi-bag; preshredding; and optical or sonic controls (Figure 2-3). Bag compactors can be chute fed. Manufacturers claim productive equipment capacities ranging from five to 34 cubic meters (seven to 44 cubic yards) per hour. The output and efficiency of any of these machines are dependent upon the maintenance and operation time and attention given by personnel. Single bags must be removed and replaced when full. Continuous multi-bags must be tied off, removed and replaced; filled castered containers must be replaced. Manufacturers claim compaction ratios between four to one and eight to one, and package densities from 288 to 961 kilograms per cubic meter (18 to 60 pounds per cubic foot).

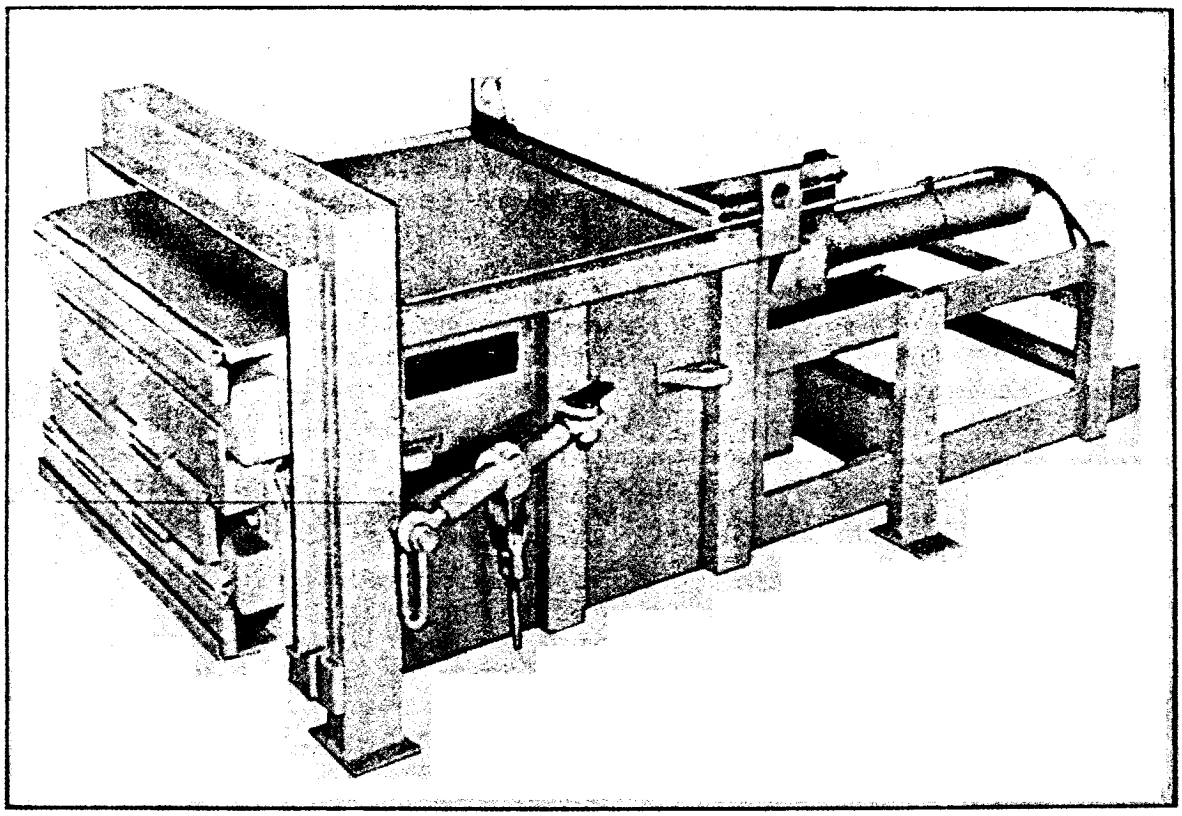

FIGURE 2-1
Typical Stationary Compactor Unit

2.2.1.3 Vertical or Console Compactors. These compactors employ a vertical compacting ram which may be mechanically, hydraulically or air operated (Figure 2-4). These units, which are usually hand fed, compress waste into a corrugated paper box or a plastic or paper bag. Some models consist of one or two (side-by-side) containers in an enclosed cabinet. In-line type compactors are also available. Some of these units will accommodate up to eight containers, but they are not within an enclosed cabinet. The containerized packages are about 0.08 to 0.17 cubic meters (three to six cubic feet) in volume. The densities of containerized packages, ranging from 192 to 481 kilograms per cubic meter (12 to 30 pounds per cubic foot), result from compaction ratios as high as ten to one.

2.2.1.4 Rotary (Carousel) Compactors. Rotary compactors consist of a ram mechanism which packs loose wastes into paper or plastic bags held in an open position on a rotating platform (Figure 2-5). When the bag under the packing ram is filled, it is replaced mechanically with an empty one. The bag is held in place within a compartment thereby preventing it from rupturing during the packing process. These compactors are made in standard models of eight- or ten-bag compartments; other models are available which can accommodate 20 or 30 bags.

2.2.2 Balers. This type of compacting equipment reduces the original loose volume of compressible materials, producing a dense compact package of manageable size and weight. Compacted bales are bound with metal strapping, wire, or twine; or they are retained in a plastic bag or corrugated cardboard box, which may be bound by restraining strapping or wires. Although balers effectively handle bagged or loose dry wastes, they cannot properly handle wastes which are excessively wet. Baler manufacturers generally indicate that heterogenous solid wastes must be shredded prior to baling. Such preprocessing assures a tight bale that will hold together, even during rough handling. If subsequent resource recovery is to be achieved, selective segregation, prior to baling, is essential. Though baling is compatible with incineration or disposition to a sanitary landfill, the baling wire or straps may have to be cut prior to incineration. Balers are available in single or multistage, horizontal or vertical (upstroke and downstroke), and portable or stationary models. The

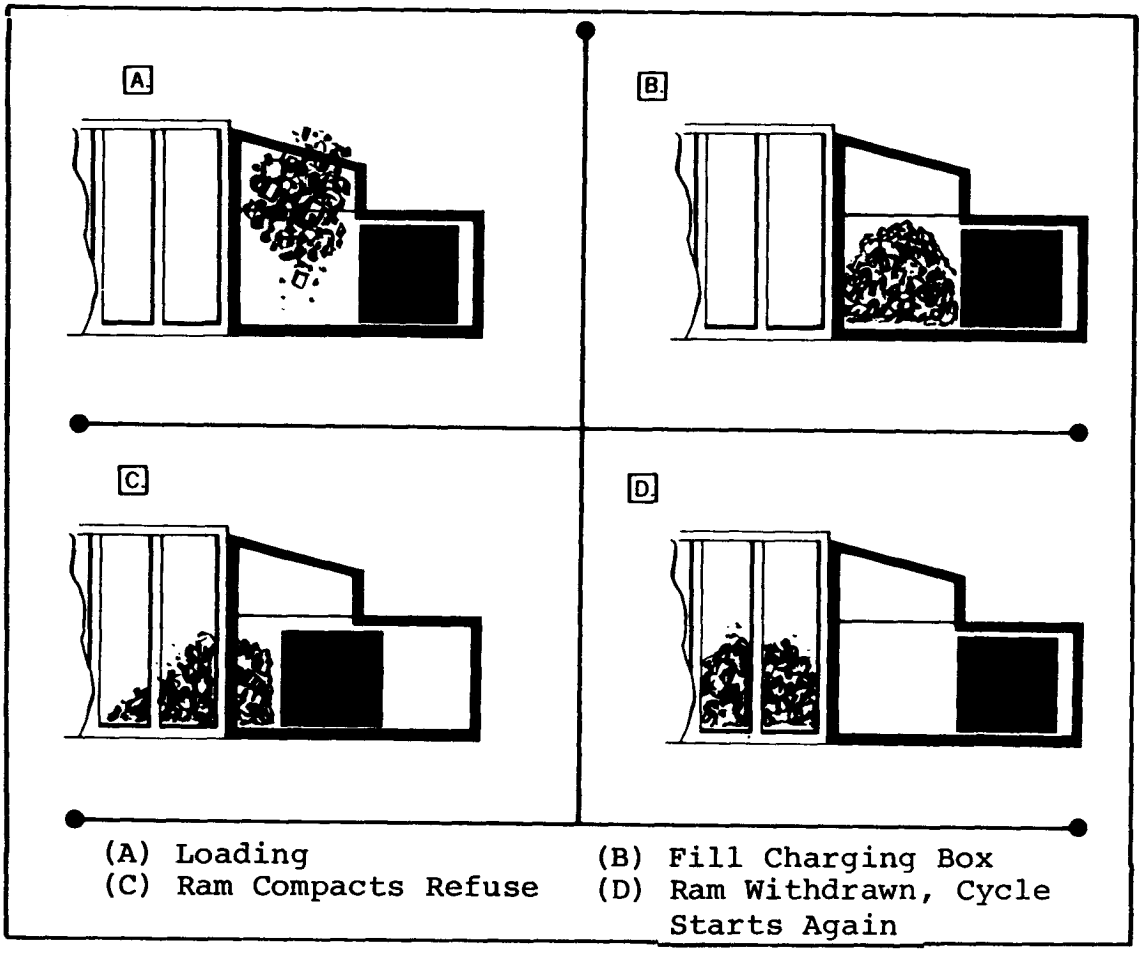

FIGURE 2-2
Schematic of Stationary Compactor Operation

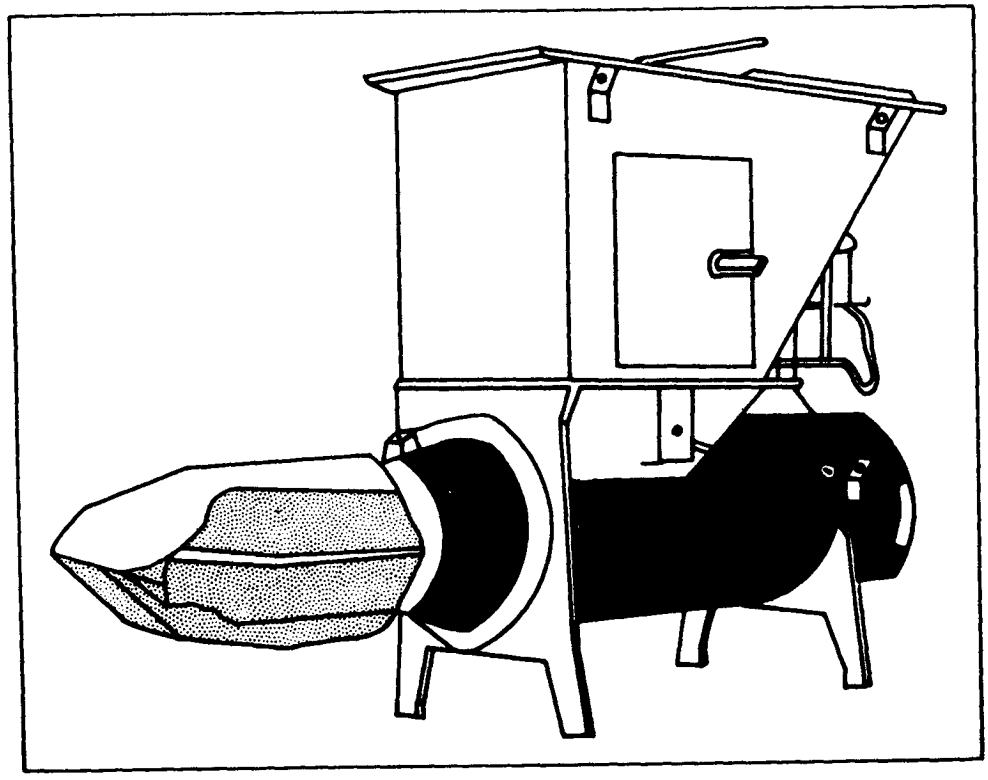

FIGURE 2-3
Typical Bag Compactor (or Extruder Compactor)

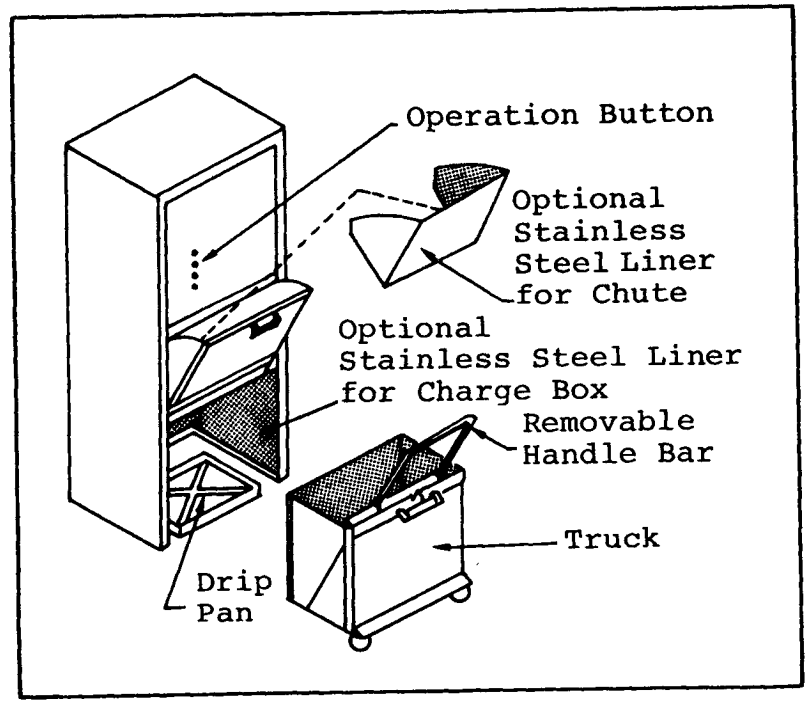

FIGURE 2-4
Typical Vertical Compactor

specific difference between these units is the direction of the action of the compaction ram. Single stage horizontal balers have the advantage of continuous operation, which allows for faster production and for variations in bale sizes. Multistage balers yield the greater bale density. Vertical balers have the versatility of multi-floor operation, wherein baling is performed on one floor and the finished bale is ejected at another floor level.

2.2.2.1 Portable Balers. Portable balers are available in both horizontal and vertical models, and can be moved on rollers or by forklift to the point of waste generation. Truck and trailer mounted mobile units are also available. Although they are designed for relatively low-volume production, portable/mobile units may save time by eliminating the need to move waste to a central baler. A fixed baler installation can rarely be justified for less than 2.7 metric tons (three tons) per day. The horizontal portable types have gross weights between 680 and 907 kilograms (1500 and 2000 pounds) and range upward in size to 3 meters (ten feet) long, 0.9 meters (three feet) wide, and 0.9 meters (three feet) high. They produce bales which must be tied with twine or bound with wire or metal straps. Bales are between 0.3 and 0.4 cubic meters (10 and 15 cubic feet) in volume and weigh

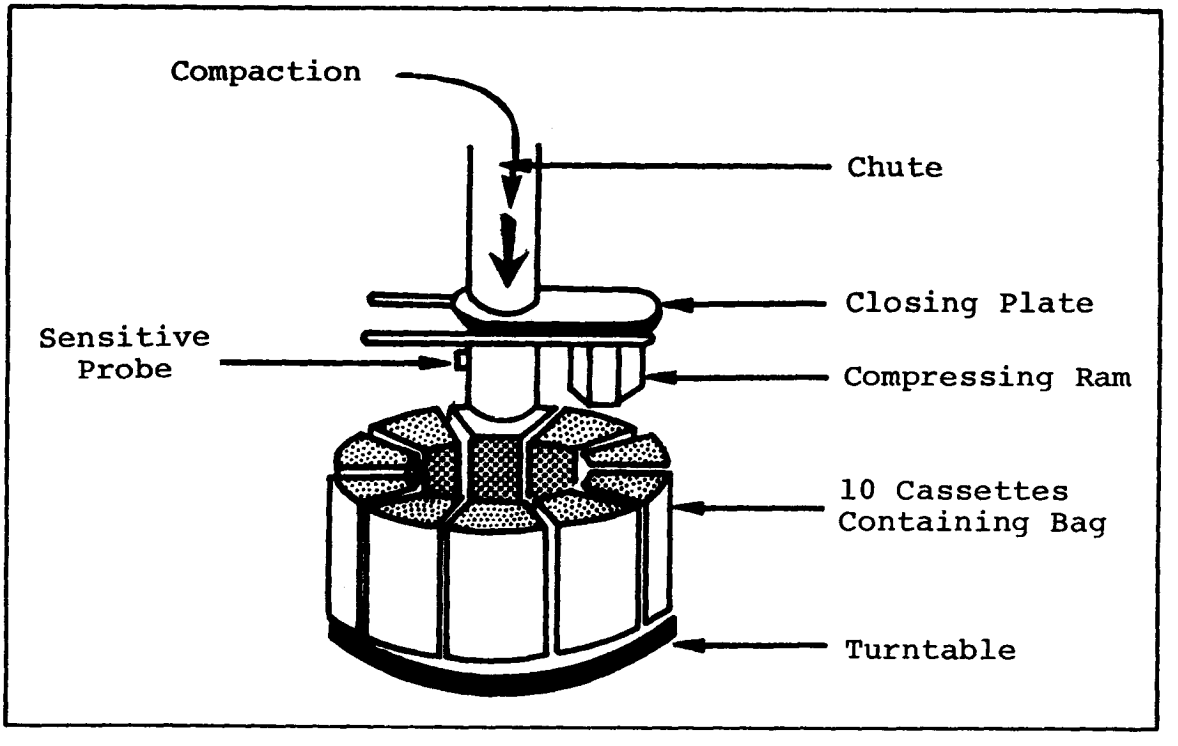

FIGURE 2-5
Typical Rotary Compactor

from 45 to 136 kilograms (100 to 300 pounds). Portable balers are electrically powered. The vertical type baler is a self-contained baling press usually mounted on four pneumatic tires. Since these units weigh about 2.7 metric tons (three tons), they must be towed. A small gasoline engine often provides the power for the hydraulic operating system. The baler size range is up to 4 meters (13 feet) high, 3.7 meters (12 feet) long, and 2.4 meters (eight feet) wide. Portable balers are normally manually operated and not readily adaptable to chute-feeding (Figure 2-6).

2.2.2.2 Stationary Balers. This baler is made in a wide range of sizes and types. Most horizontal balers used for mixed solid waste are of the single-stroke, hay-baler-type design. Multi-stage balers, in which compression forces are applied from two or three directions, are used primarily in metal baling. Some machines are capable of producing bales which weigh from 68 to 907 kilograms (150 to 2000 pounds) or more and have volumes from 0.2 to over 1.4 cubic meters (6.5 to over 50 cubic feet). Bulk reduction of three or four to one can normally be expected. The size of the bales produced by some models will permit the enclosure of the bale in a plastic bag to reduce nuisance odors and the attraction of flies and rodents. Horizontal balers can be fed in various ways. Chutes, conveyors, and other mechanical devices are commonly used. These balers are available with continuous feed capability. Continuous operation under semiautomatic conditions yields maximum capacity. Automatic bale tieing equipment is available but the associated cost is usually prohibitive (Figure 2-7). Upstroke and downstroke balers are primarily used for baling homogeneous wastes such as corrugated and scrap metals. Both automatic and manual operation are available.

2.2.3 Pulpers and Shredders (Hammermills). This equipment is used to break up wastes through grinding, crushing, chipping or shredding. If properly designed and operated, pulpers and shredders can meet the requirements for destruction of classified (security) material. The units described in the following paragraphs are for use at individual facilities. Large units used in resource recovery and disposition operations are discussed in Chapter 4.

a. Pulpers. Pulpers may use either a wet or dry process (pulverizers). Pulping has some merit as a method of processing solid wastes for ultimate disposal. A distinct advantage of wet pulping is the ease with which the wastes can be transported as a slurry. Generally, wet pulpers consist of a pulping bowl with a pulping impeller and a waste sizing ring in the bottom. Accessory equipment includes bulky material ejectors and dewatering presses (Figure 2-8). The pulpers and junk ejectors are mounted directly adjacent to each other. However, the dewatering press may be located at

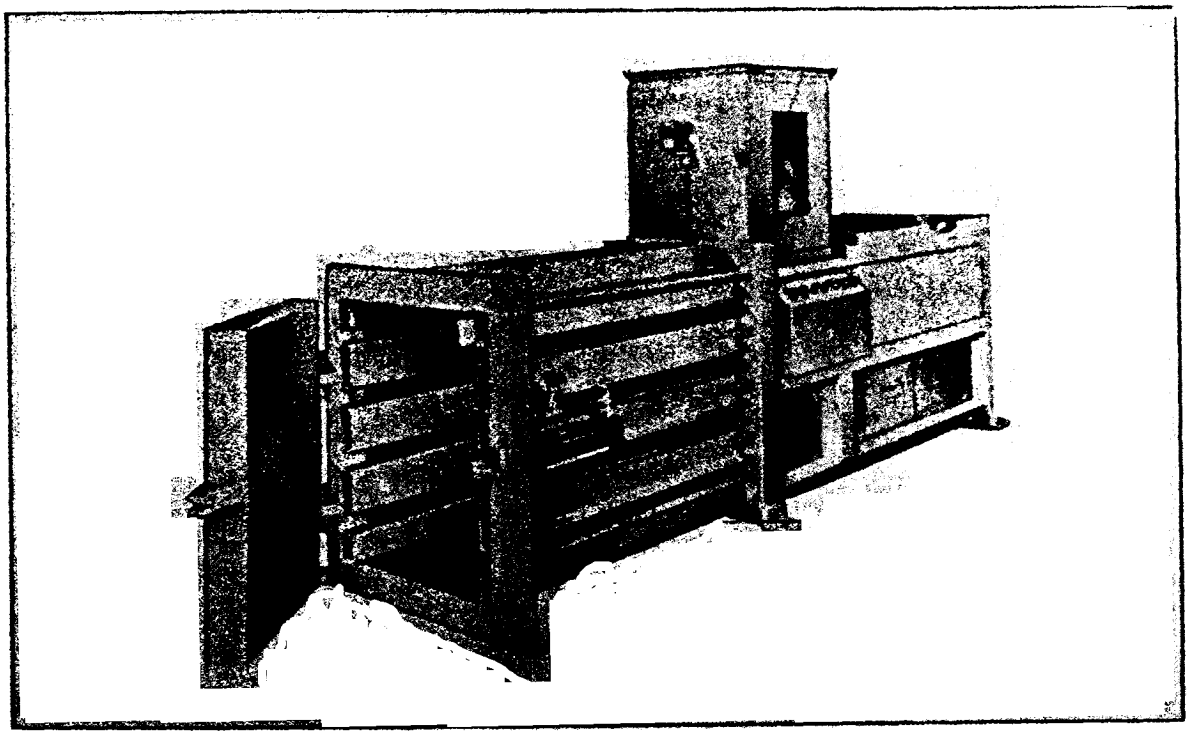

FIGURE 2-6
Typical Portable Baler

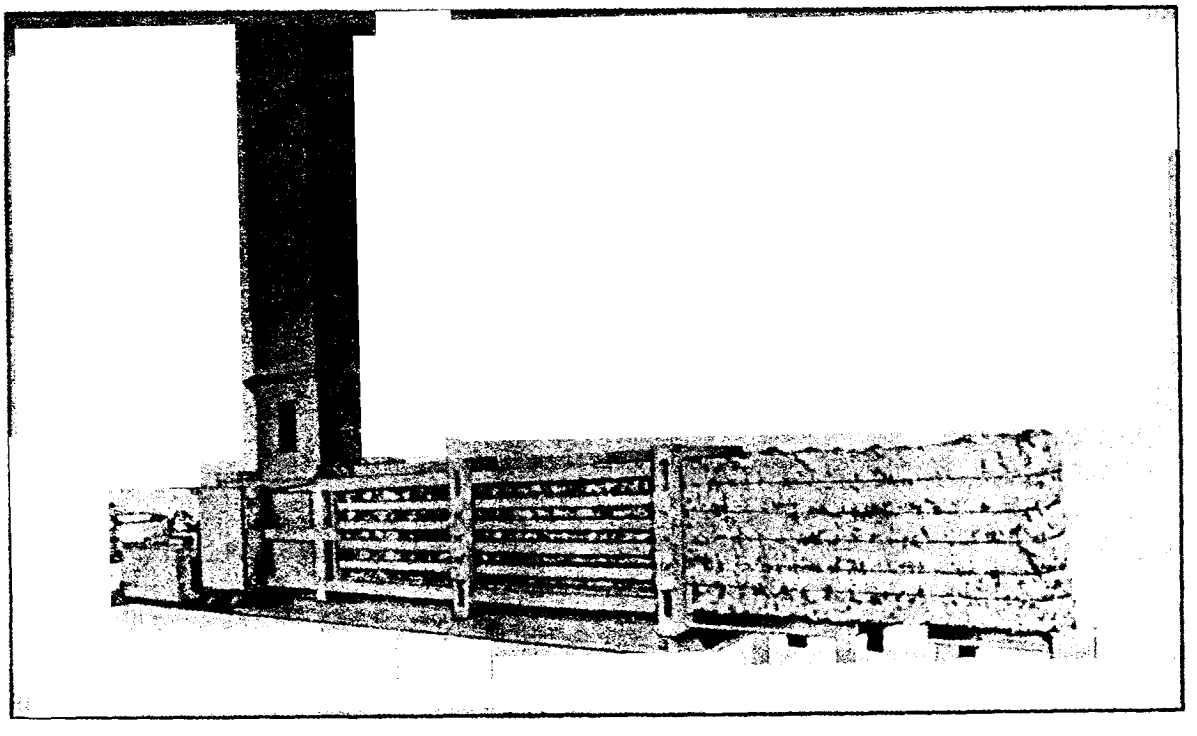

FIGURE 2-7
Typical Continuous Automatic Baler

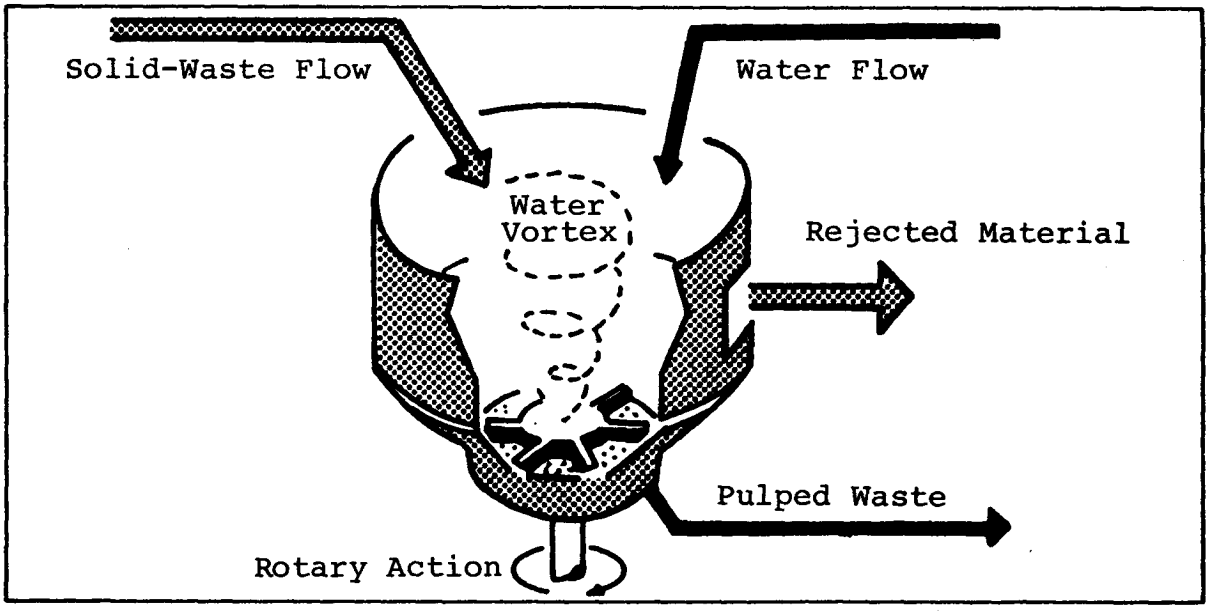

FIGURE 2-8
Typical Wet Pulper

some distance and be connected to the pulper by piping. Classified (security) material is introduced into the pulper by chute in floor models, or manually fed into pit models. Pulper capacities range from about 0.45 to 1.8 metric tons (one-half to two tons) of waste per hour. Pulpers may have considerable difficulty in the satisfactory processing of plastics, especially binders, and some of the heavier materials found in unselected wastes. Dry process pulverizers can handle all types of paper, including IBM cards, photographs, medical and personal records, and even offset plates and glass slides. The end product is similar to coarse cotton in appearance. The complete system includes a cyclone separator, a dust collector and a small compactor. The actual reduction device is a swing hammer impact mill with a built-in pregrinding shredder. Models with capacities ranging from 136 to 4530 kilograms (300 to 10,000 pounds) per hour are available.

b. Shredders. Shredders are mills which are frequently used to break up materials. They are quite similar to hammermills or grinders in principle. Shredders are of two main types. The down-running shredder has material fed to it on the down swing of the hammers. The over-running type receives material at the top of the mill and on the upswing of the hammers. Over-running, sometimes called up-running, shredders or crushers are used with less friable materials when a longer cycle in the mill is desired. A wide range of capacities to suit almost any requirement is available.

2.2.4 Containers and Container Storage. Containers for collection and storage of wastes include two types: nondisposable and disposable. Containers are not necessarily provided by the government, depending upon requirements of the contractor servicing the installation.

2.2.4.1 Nondisposable Containers. Nondisposable containers are of two kinds: covered-box, large volume containers serving large facilities or a number of residencies, and cans or wheeled toters used by individual residencies and small facilities. Large nondisposable containers for multiple family dwellings and other large-volume waste producing areas are designed to be picked up by hoist-and-haul or front loading trucks. Specifications for these containers are discussed in Chapter 3.

2.2.4.2 Disposable Containers.

a. Advantages. The advantages of using disposable paper or plastic bag containers include the following:

(1) Reduced pickup time.

(2) Reduced noise.

(3) Lower costs.

(4) Better sanitation.

The use of bags in residential areas is a distinct advantage because such use increases productivity. Paper and plastic bags have been proven capable of maintaining the required sanitary conditions. In addition, after trash collection no empty containers remain to be returned or to be disarranged.

b. Disadvantages. Besides the cost of bags, some of the disadvantages of using bags include the following:

(1) A method insuring their use must be provided.

(2) Material such as brush and shrub cuttings cannot be bagged.

(3) Pets may cause some bag damage; however, this reflects a deficiency in the pet control system.

(4) Wild animals (racoon, opossum, etc.) may damage bags and scatter wastes.

2.3 PROCEDURES BY SOURCE. Selection of equipment and materials for collection and storage depends on many factors including:

a. Types and rates of waste generation.

b. Local regulations and customs.

c. Local availability and compatibility of equipment.

The procedures outlined in the following paragraphs are applicable to a variety of conditions.

2.3.1 Residential Areas. Since residential wastes can be exclusively classified as post-consumer wastes, they are prime candidates for installation recycling or resource recovery programs. Although voluntary recycling programs can be established by residents of family housing, source segregation requires appropriate regulations. A well organized and well executed publicity campaign, explaining the justification, goals, methods and level of separation, must also be conducted to inform and motivate residents and secure their cooperation. This publicity campaign should precede the program and continue on a regular basis for the program's duration. The following procedures shall be followed for residential wastes:

a. The number of containers required is inversely proportional to the frequency of collection and directly proportional to the rate of waste generation. Provisions should be made to handle additional refuse during anticipated seasonal variations or in the event that the collection schedule is unexpectedly interrupted.

b. Containers, particularly those at dining facilities and other locations as determined by the installation surgeon, should be placed at least 30 centimeters (12 inches) above the ground on steel or wooden racks constructed so as to prevent wind and scavengers from upsetting them. Placing containers on the racks provides drainage, reduces corrosion at the bases of the cans, and facilitates cleaning of the areas (Figure 2-9). The requirement to place containers on a 30 centimeters (12-inch) rack for a single family or a duplex dwelling may be too costly to be feasible as well as a possible safety hazard.

c. Containers should be kept dry. They should be cleaned with a germicidal solution as required to destroy bacteria, eliminate objectionable odors and prolong container life. The required frequency of cleaning must be determined locally and will depend upon such factors as the contents and the climate.

FIGURE 2-9
Galvanized Cans on Platform

d. Containers should be placed at locations, such as curbside or alley, convenient to both the residents and the collection crews. Rigid plastic containers offer the advantages of being lighter in weight and quieter in handling. If standard containers are not provided for residential areas by the installation, they should be made available through the installation exchange.

e. For aesthetic and sanitary purposes the container storage area should be screened off, and only materials that are intended to be collected by the sanitation crews should be stored in the area.

f. Garbage and wet refuse should be wrapped in paper, or other suitable material, before being placed in refuse containers.

g. Separation of used newspapers at the source of residential generation in conjunction with separate collection shall be carried out at all installations in which more than 500 families reside, and the newspapers shall be sold for recycling. This policy is subject to local requirements and DLA guidance.

h. As applicable, glass, cans, and mixed paper can be segregated at the source of generation and be collected separately for recycling.

i. For multi-family housing facilities, segregated materials should be stored in bulk containers placed outside the buildings. Trucks which can keep materials segregated should be dispatched to collect recyclable material.

2.3.2 Commissaries and Exchanges. The bulk of the wastes generated at commissaries and exchanges is packaging

material. These wastes are normally collected and recycled by the commissary and exchange management via sale. The monies derived are used to defray commissary and exchange costs. These wastes may be collected and sold for recycling purposes through the Defense Property Disposal office. In this case the following procedures shall be followed:

a. For corrugated paper, any installation generating 9.1 or more metric tons (10 or more tons) per month should separately collect this material and offer it to the local Defense Property Disposal Office for sale and for the purpose of recycling. Selection of the method of separation and storage will depend on such variables as:

(1) The physical layout of the individual generating facility.

(2) The rate at which the corrugated material accumulates.

(3) The storage capacity of the facility.

(4) The projected cost-effectiveness of using various pieces of equipment.

All modes of separation and storage presuppose that the corrugated material will be accumulated at a central location in the facility after its contents are removed and the boxes are flattened. Using various sized balers, the corrugated boxes are compacted and stored inside or outside. However, unless precautions are taken, outside storage can result in unauthorized removal. When stationary compactors or bulk containers are used, they can be placed outside the building for direct loading of the cardboard boxes. The containers should be covered to keep out moisture and locked to prevent unauthorized removal.

b. Salvageable meat trimmings and bones should be placed in suitable containers and sold.

c. Other solid wastes such as spoiled food, paper, and floor sweepings should be gathered and placed in an appropriate waste receptacle for subsequent collection with other installation wastes.

2.3.3 Clubs and Messing Facilities. These facilities generate wastes associated with food packaging materials and preparation. The following procedures shall be followed:

a. Food Wastes. Some facilities process food wastes through garbage grinders and use the installation sanitary sewer for disposal. Food wastes not disposed of in sanitary sewers shall be handled as follows:

(1) Edible Garbage for Hog Food. Utilizing edible garbage for hog food is now limited to that garbage which has been cooked and prepared in accordance with Federal, state, or local regulations. In recent years, the trend has been towards total elimination of the use of garbage for hog food. However, if sale of garbage for hog food is locally acceptable, the garbage must be drained and placed in covered cans for storage prior to sale.

(2) Cooking and Trap Grease. Place grease in covered containers and sell.

(3) Bones and Meat Trimmings. Place bones and meat trimmings that can be salvaged in covered garbage cans and sell.

b. Beverage Containers. Returnable beverage containers should be used to conserve materials and reduce the amount of solid waste generated. For disposal of glass, beverage and other metal containers follow these procedures:

(1) Glass and Bottles. Put salable glass and bottles in covered containers at pickup stations which serve dining facilities.

(2) Metal Cans. Salvaged cans shall be cleaned, flattened, when possible, and placed in containers. These materials may then be disposed of as scrap.

c. Other Containers. Many other food containers and packages, such as egg crates, may be recycled by returning them to the supplier for reuse. After making arrangements with the supplier, segregate and store these materials until they are returned.

d. Other solid wastes such as paper and floor sweepings should be collected and placed in an appropriate waste receptacle for subsequent disposal with other installation wastes.

2.3.4 Administrative Offices and Classrooms. Administrative offices and classrooms are a source of high grade paper waste scrap. Smaller quantities of food waste, beverage containers and other materials are usually generated. High-grade paper generated in office areas of over 100 workers is to be separated as required by 40 CFR 246 of 23 April 1976, "Source Separation for Materials Recovery Guidelines," at the source of generation, separately collected and sold for recycling. (Specific service directives should be followed for further guidance and requirements.) Adequate precaution should be taken to eliminate the possibility of a fire hazard from any segregated, stored paper scrap.

2.3.4.1 Systems for Source Separation of Paper. A two-level separation may be used for many activities. These two levels should consist of high-grade wastepaper and all other wastes. Some facilities produce waste computer printout paper and cards in large enough quantities to make their separation cost effective. These facilities may choose to implement an additional level specifically for computer paper and cards. The method of separation and collection selected will depend upon the physical layout of the facility, the ease of collection, workers' preference, and the cost effectiveness of the system used. Collection of the recyclables and regular waste from individual offices should be performed by the janitorial services. Collection of recyclables and regular waste of the installation can be performed by the trash and refuse contractor on alternate days to facilitate collection efforts. Systems for source separation of paper include the following:

a. Desk-Top System. Recyclable paper is placed in a desk-top tray or other small holder. At the individual worker's convenience or when the tray is filled, the paper is taken to a conveniently located container. Such containers may be corrugated boxes or specially designed bins. The number of locations and the frequency of collection of these containers are determined by office size and janitorial staff capacity.

b. Two-Waste-Basket System. Two waste baskets are placed at each desk clearly marked or color coded as to which is to be used as the container for recyclable paper.

c. Special Wastes (Computer Cards and Printout Paper). Receptacles for these special wastes should be near the terminal or in some other practical, centrally located place and not in individual offices.

2.3.4.2 Disposal of Classified Material. Classified material shall be disposed of in accordance with applicable Military Department directives. Declassified residue may be processed for disposal in the same manner as other similar waste materials.

2.3.5 Industrial Activities. Solid wastes generated by industrial activities can frequently be salvaged as salable scrap. Industrial wastes may be divided into two types depending upon the degree of management required for their safe handling and disposal. The two classes are inert scrap (metals, wood and dunnage) and hazardous wastes (sludges, chemicals). The management of hazardous wastes is covered in Chapter 5. Inert scrap should be collected and stored as follows:

a. Metals. Ferrous and non ferrous metals should be stored separately. Different non-ferrous metals such as aluminum and copper should also be segregated. Open-top receptacles may be used for storage prior to collection.

b. Dunnage. Non-corrugated packaging material may be baled by the activity or a trash and refuse contractor. Bales stored outside should be covered to protect them from moisture. Small amounts of paper may be disposed of with rubbish.

c. Debris and Rubbish. Combine non-edible garbage, such as coffee grounds, with combustible rubbish for disposal by incineration or landfill. If an incinerator is used for disposal, exclude large quantities of noncombustible material from the incinerator feed and deliver directly to the landfill or ash disposal site. Combine noncombustible and combustible materials when sanitary landfill is the method of disposal. Suitable receptacles include garbage cans with tight-fitting lids or approved disposable containers (bags).

d. Wood. Pile wooden boxes, crates, barrels, and scrap lumber at the pickup station or provide large-volume receptacles to reduce pickup time.

e. Ashes. Place ashes in covered 120 liters (32-gallon) garbage cans. At power plants, boiler plants and other facilities where large quantities of ash are produced, special containers may be used with the approval of the installation engineer.

2.3.6 Ship Wastes. Wastes from Navy ships are categorized by four waste streams:

a. Sewage/hotel.

b. Oily.

c. Solid.

d. Industrial.

The following paragraphs cover the solid (including garbage) and industrial waste streams.

2.3.6.1 Processing of Solid Wastes on board Ships. Eventually, ship garbage will be processed through food grinders to the ship's Collection Holding and Transfer System (CHT), then pumped ashore to a sanitary sewer for disposal. The

primary means of offloading solid waste from ships is with manpower. Dry waste is usually offloaded from ships in plastic bags. Food waste (garbage) is usually offloaded in 120 liters (32-gallon) metal containers which are then emptied into shore containers and then returned to the ship for reuse. Since the weight of the containers is normally less than 22.7 kilograms (50 pounds), special handling equipment is not used. Receptacles for handling segregated solid waste (solids/paper), metals and food waste, should be located on the piers. The shore installation has the responsibility for providing adequate collection container types and capacity on each pier. The receptacles are removed from the piers and the waste disposed of in the same manner as the shore generated wastes. On-board processing equipment for solid wastes includes incinerators on larger ships only (normally not used in port) and food grinders. In the future it is expected that most ships will have a compactor which will compact dry trash being offloaded from the ship into slugs, each weighing less than 22.7 kilograms (50 pounds). Each slug will be contained in a plastic bag.

2.3.6.2 U.S. Department of Agriculture Regulations for Garbage Disposal. U.S. Department of Agriculture (USDA) regulations specify rigid enforcement of applicable Federal agriculture laws and regulations (7 CFR 330). These regulations apply to ships and planes carrying garbage from foreign areas/ports to the Continental United States (CONUS) and Alaska. For purposes of these regulations, the term "garbage" includes foods, food wastes, wrappings, containers and disposable serving materials. Pure foods (meats, vegetables, fruits) originating in the Continental United States are considered by USDA to be contaminated if they are landed, stored, or transferred at a foreign port, including Hawaii, and/or added to or intermixed with locally procured or provided foods at points outside the Continental United States and Alaska. Specifically, all Navy ships and planes which have visited a port in any foreign country (except Canada), American Samoa, Guam, Hawaii, Puerto Rico, Virgin Islands, or the trust territories will be boarded by a USDA Plant Protection and Quarantine Program (PPQ) Inspector at the first United States port of arrival. Contaminated garbage shall be stored and transported in tight, leakproof containers. All wet garbage aboard such ships/planes will be removed and destroyed. Three methods of destruction of potentially contaminated garbage are currently accepted:

a. Treatment of garbage at arrival port by steaming/cooking at 100°C (212°F) for 30 minutes prior to landfill dumping.

b. Burning in approved incinerators.

c. Grinding and flushing through the ship's CHT system to an approved sewage system.

If the PPQ inspector finds that no contaminated materials are aboard and after the initial wet garbage is removed for proper disposal, no further restrictions will prevail on disposition of subsequently generated garbage. Separated dry trash may be put into the regular disposal system available unless there is evidence that it has been contaminated by the intermingling or contact with contaminated garbage. Specific methods for the handling, processing and disposal of solid wastes arriving from foreign ports should be investigated for each shore activity responsible for dealing with this problem.

2.3.6.3 Industrial Wastes. Ship industrial wastes are normally segregated from other ship waste streams at the point of generation. Steel or plastic containers having a capacity of 20 liters (five gallons) are used for most small quantities of waste and 0.208-cubic-meter (55-gallon) steel drums are used for bulk quantities of industrial liquids. These containers are either handled manually or with conventional cargo handling equipment and placed on the pier. The collection point may require special receptacles or an enclosure to physically separate and protect these wastes from normal pier activities until they are collected. The wastes are then collected and disposed of as required by shore facility personnel. Industrial wastes should not be collected or disposed of until they have been adequately identified and labeled by the ships generating them.

CHAPTER 3. COLLECTION AND TRANSFER

3.1 EQUIPMENT SELECTION. Solid waste collection is usually the most expensive step in a waste management system. Recent surveys show that collection and transportation to the disposal facility account for 70 to 80 percent of the total cost of solid waste management; therefore, considerable effort must be placed on the selection and use of collection equipment in order to ensure effective, efficient collection of solid waste. This chapter provides detailed guidance for developing such a collection system.

3.2 COLLECTION POINTS. A collection point consists of two elements: a container and a location for the container. There are two classes of waste containers: disposable and nondisposable. Disposable and nondisposable containers for individual residences and small facilities are discussed in paragraph 2.2.4. Container selection for a particular facility depends in part on the type and quantity of solid waste generated; therefore, when designing a new collection system or modifying an existing one, the type and size of containers and their location should be determined first. Because the removal of solid wastes after collection and storage is the responsibility of the installation commander, the selection of the collection point is also his responsibility. The following paragraphs discuss large, nondisposable containers.

3.2.1 Containers. Basically, there are four types of mechanically loading containers in use: the self-loading, lugger-box, roll-off and enclosed-compaction types.

3.2.1.1 Self-Loading Type. These containers, which are used with compactor trucks, range in capacity from 1.2 to 11.5 cubic meters (1.5 to 15 cubic yards). They are classified into two categories:

a. The most commonly used is the front-loading type with sizes ranging from 0.4 to 7.7 cubic meters (0.5 to 10 cubic yards) (Figure 3-1). They are not suitable when overhead clearance is restricted.

b. The rear- and side-loading types are usually not larger than 4.6 to 6.1 cubic meters (6 to 8 cubic yards) (Figures 3-2 and 3-3).

3.2.1.2 Lugger-Box Type. This type of container ranges in capacity from 1.5 to 15.3 cubic meters (2 to 20 cubic yards) (Figure 3-4). These containers, used with hoist-and-haul vehicles, are carried to the disposal area or the transfer station and emptied.

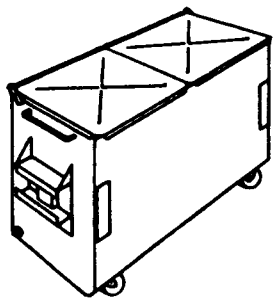

1.5 Cubic Meters
(2 Cubic Yards)

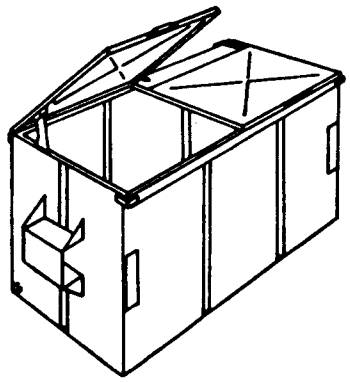

2.3 Cubic Meters
(3 Cubic Yards)

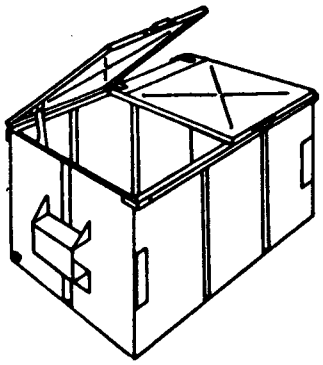

Top Loading
3.1 Cubic Meters
(4 Cubic Yards)

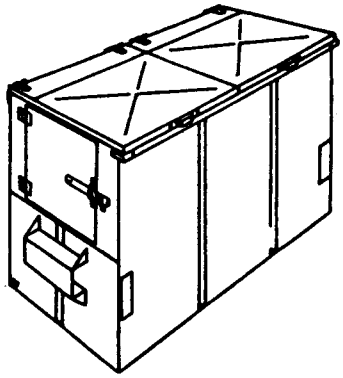

Top and End Loading
3.1 Cubic Meters
(4 Cubic Yards)

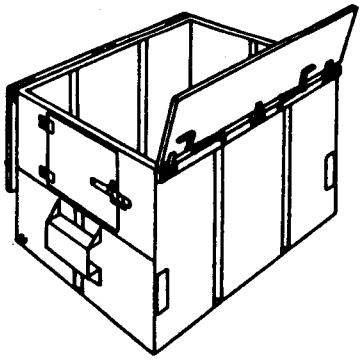

Low Top and End Loading
4.6 Cubic Meters
(6 Cubic Yards)

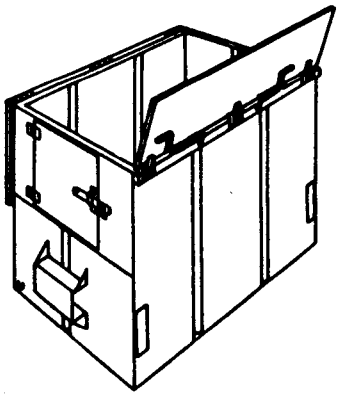

High Top and End Loading
4.6 Cubic Meters
(6 Cubic Yards)

FIGURE 3-1
Front-Loading Containers

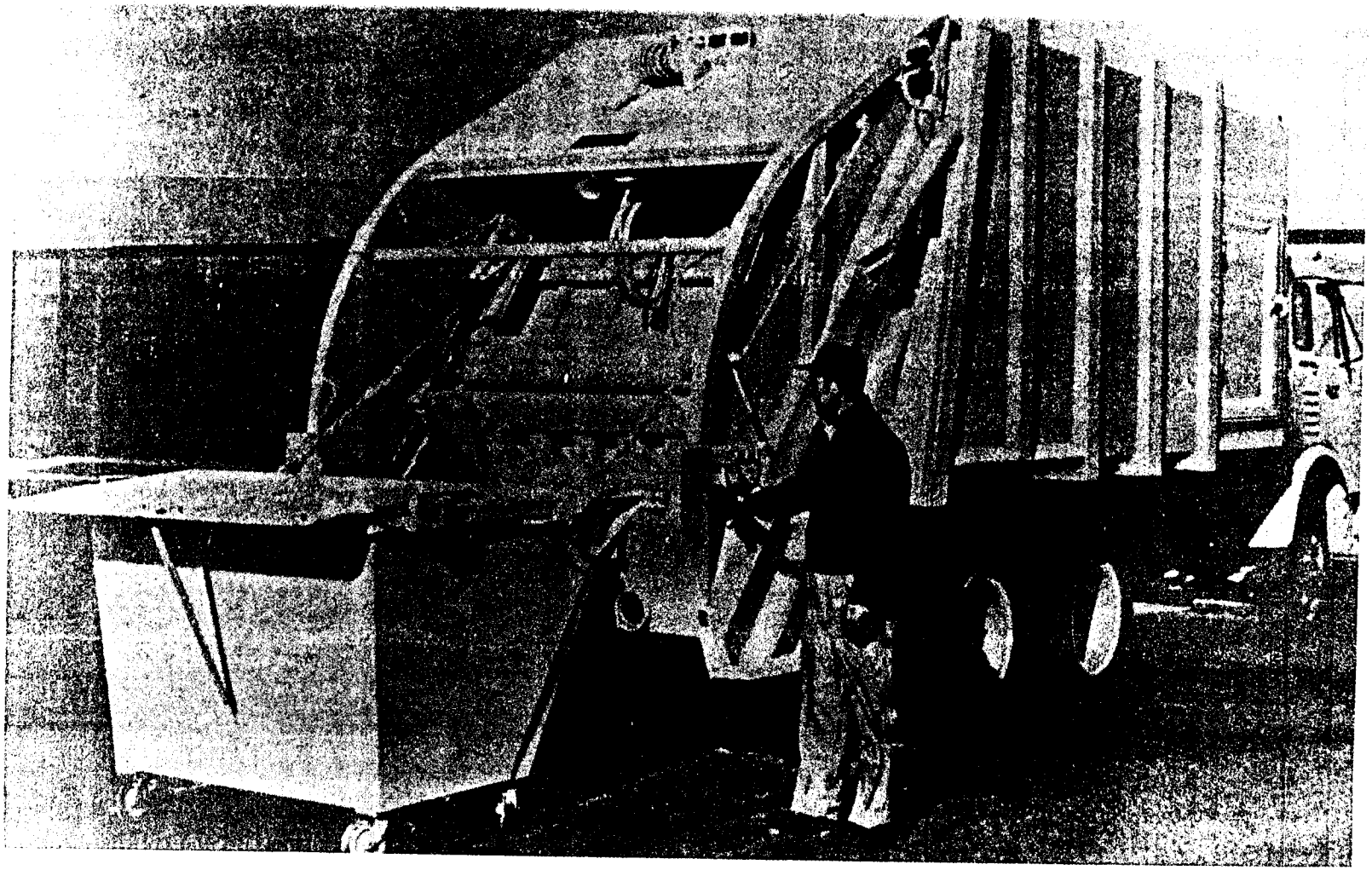

FIGURE 3-2
Self-Loading Container and Rear-Loading Collection Vehicle

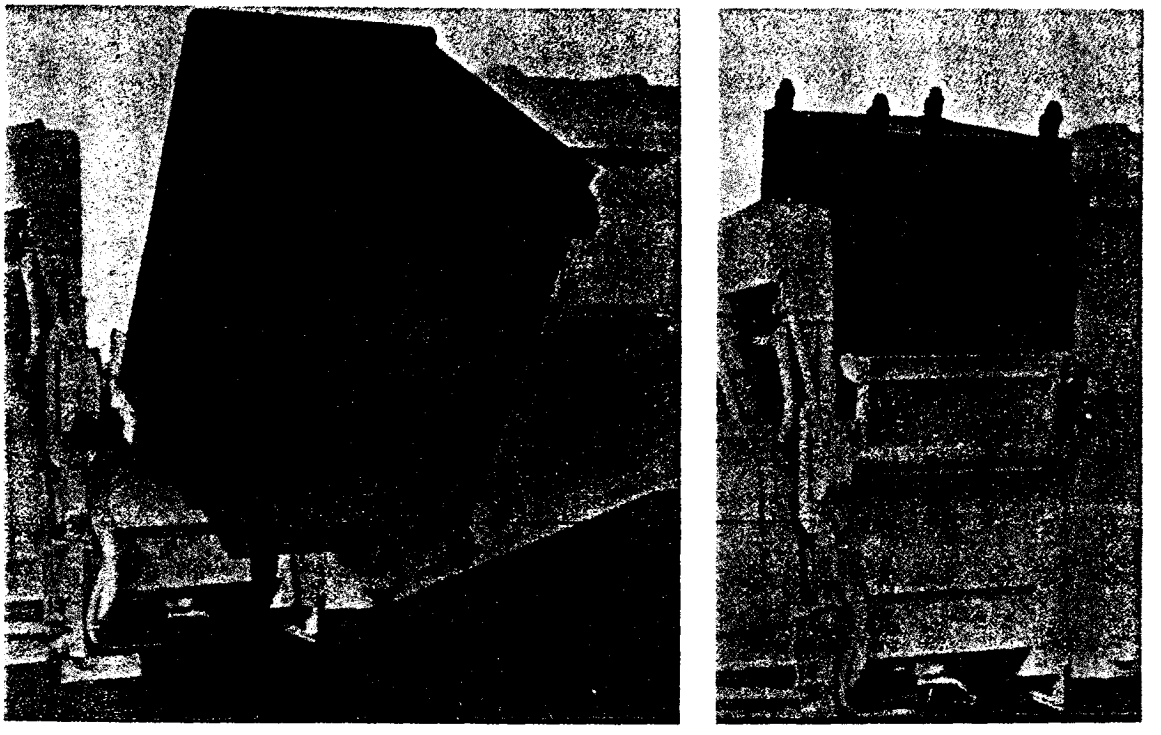

FIGURE 3-3
Self-Loading Container and Side-Loading Collection Vehicle

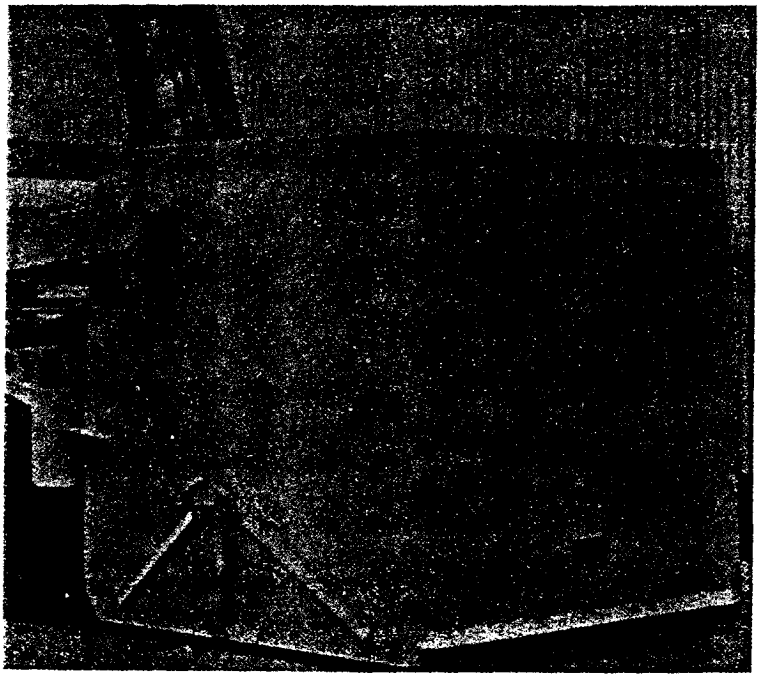

FIGURE 3-4
Typical Lugger-Box Container

3.2.1.3 Roll-Off Type. The roll-off container ranges in capacity from 7.7 to 38.2 cubic meters (10 to 50 cubic yards), usually in increments of 3.1 or 4.6 cubic meters (4 or 6 cubic yards) (Figure 3-5). They are pulled onto a tilt-frame truck by winch or hydraulic system. The container is hauled to the disposal area or transfer station where it is emptied by tilting the truck frame with container attached, similar to a conventional dump truck.

3.2.1.4 Enclosed-Compaction Type. Special storage containers are available for use in conjunction with compaction units (Figure 3-6). They are available in various sizes and configurations suitable for loading by compactor truck, hoist-type vehicle, or tilt-frame vehicle. These containers are equipped with rollers or casters to facilitate movement in conjunction with the compactor unit.

3.2.2 Container Location. Typically, containers have been located in three places: the curb or alley, backdoor sites, and a central collection location. Each location has its advantages and disadvantages as discussed in the following paragraphs. (See Table 3-1.) The selection of backdoor sites for container collection is not allowed because of the adoption of a recommendation by the Fourth Department of Defense Real Property Maintenance Conference of January 1974 that make curb or alley collection locations mandatory.

3.2.2.1 Curb or Alley. Curb or alley locations permit fast collection by crews. The advantage of this method is that crews have a shorter distance to travel because the container is closer to the truck. This practice requires the waste generating activity personnel or the base residents to set the filled container(s) out and then, once they are emptied, to set them back. Although this procedure can be an inconvenience and may be considered to detract from the appearance of the area, it does reduce costs considerably. In certain areas, the crew can collect from both sides of the roadway at the same time, thus maximizing efficiency.

a. Among the disadvantages of curb or alley collection are:

(1) Increased work for the residents.

(2) The length of time that full and empty containers must be left out; however, with disposable containers there are no empties.

(3) The resident must remember the collection days.

(4) Accessibility of containers to pickup crew.

(5) Unsightly appearance.

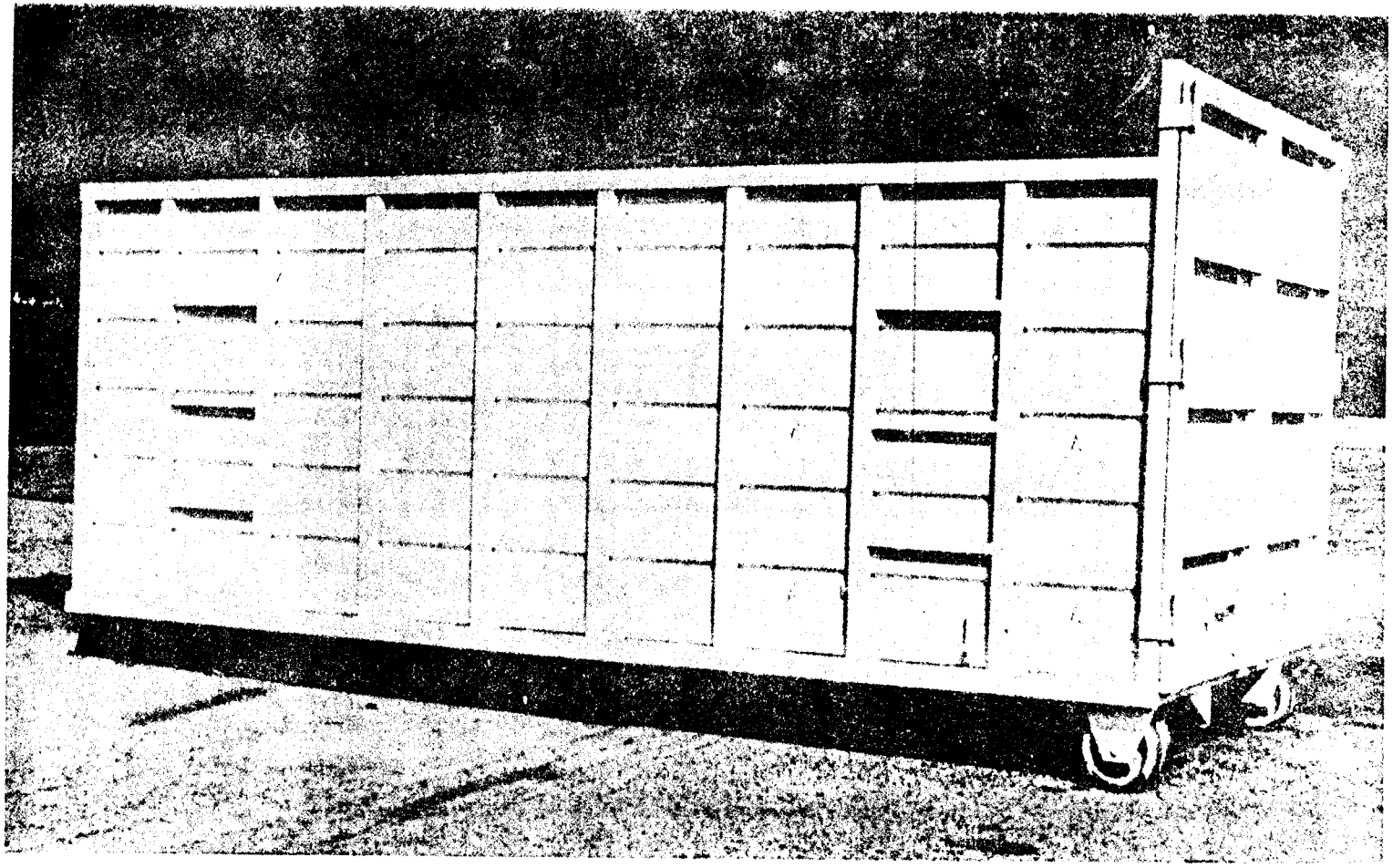

FIGURE 3-5
Typical Roll-Off Container

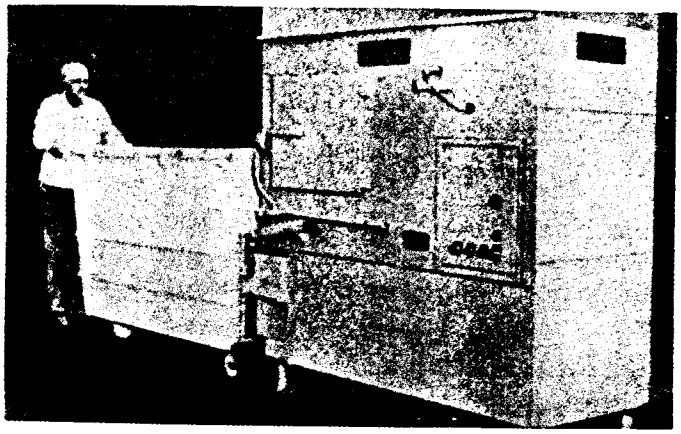

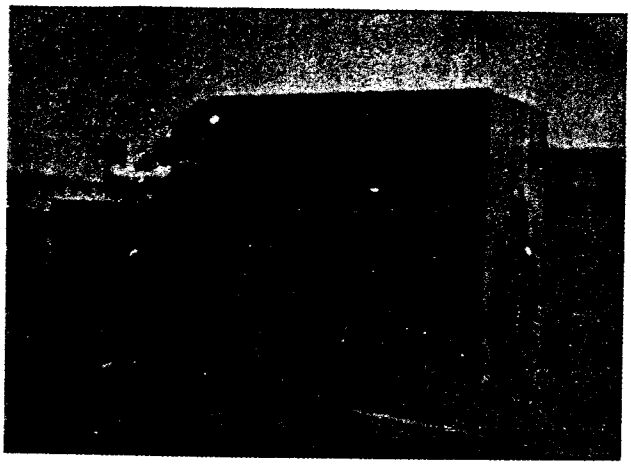

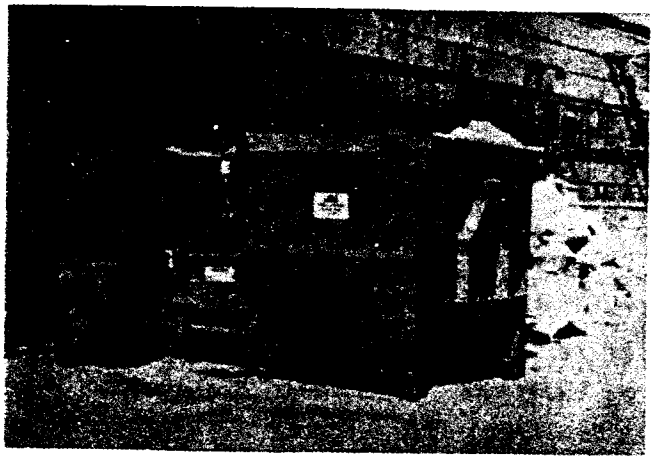

FIGURE 3-6
Typical Enclosed-Compaction Type Containers

TABLE 3-1
Comparison of Container Locations

Location	Advantages	Disadvantages
Curb or Alley	Reduced collection time. Reduced costs. Reduced administrative costs. Uniform service. Better safety record.	Resident works more. Resident has to remember collection day. Unsightly appearance. Increased chance of spillage.
Backdoor Sites*	Convenient for family housing occupants.	Multi-man crew. Greater collection time. Greater administrative skill required. Increased costs.
Central Sites	Faster collection for barracks, mess units, shop areas and multi-unit residences. Reduced personnel requirement.	Higher investment for equipment.

*See discussion in paragraph 3.2.2.

(6) A greater chance that refuse might be strewn about.

b. With curb or alley collection the size of the crew is usually determined by local conditions. Normally the vehicle is moving and the driver is required to stay with the truck. One or two persons actually place the waste in the truck and return the containers. In some cases, one-man collection may be practical. The advantages of one-man collection are:

(1) Reduction in collection time (man-hours per ton).

(2) Lower collection costs and possibly reduced equipment costs.

(3) Reduced administrative problems because of smaller, more qualified crews.

(4) More uniform service.

(5) A better safety record (sometimes) because of the higher caliber, more responsible personnel needed for one-man collection.

c. There are a number of modifications to alley or curb collection which incorporate the aspects of fast service and cost reduction. One of these methods is the set-out and set-back method. Part of the crew works ahead of the truck, setting the containers at curbside. As the truck moves along, another part of the crew then empties the contents and sets the can back into its original position. Usually, two "set-out" men are needed to keep ahead of the rest of the crew. This method offers two distinct advantages: the residents are not inconvenienced, and the containers remain at curbside for a short period of time. However, because it increases manpower requirements and thereby makes demands on a usually tight budget, this method may be difficult to implement at military installations.

3.2.2.2 Backdoor Sites. "Backdoor" pickup is a common means of collection. This method offers no significant advantages. It requires the use of multi-man crews and greater collection time which, in turn, increases costs, both in terms of labor needs and in terms of the greater administrative skills required. Containers may be less accessible to the crew.

3.2.2.3 Central Sites. The central site collection concept involves the use of bulk containers and mechanical pickup. Two things determine whether this type of system should be used: the convenience of the container to the waste generator, and the accessibility for loading. The location of collection sites is to be determined by the base civil engineer. Determination of these points of collection is based on the quantities of refuse and frequency and ease of collection. Central site collection, which can easily be incorporated into existing systems, offers distinct advantages in such areas as barracks; mess units; and maintenance, shop and manufacturing operations. Central site collection may also be advantageous in multi-unit residences where significant amounts of solid wastes are generated. The use of bulk containers speeds up collection time and reduces personnel requirements. These benefits must be compared with higher equipment investment costs.

3.3 COLLECTION EQUIPMENT. The following paragraphs detail the requirements and the types of vehicles for use at military installations.

3.3.1 Vehicle Requirements. Vehicles procured for collection and transportation shall conform to the following requirements:

a. All vehicles which are considered to be operating in interstate or foreign commerce shall meet all applicable standards established by the Federal government. These standards include, but are not limited to, Motor Carrier Safety Standards (49 CFR 390-396) and Noise Emission Standards for Motor Carriers Engaged in Interstate Commerce (40 CFR 202). Federally owned collection vehicles shall be operated in compliance with Federal Motor Vehicle Standards (40 CFR 500-580).

b. Vehicles shall have watertight bodies that are protected against vermin.

c. Collection equipment shall meet the safety requirements established by the American National Standards Institute (ANSI Z245.1, 1975, Safety Requirements for Refuse Collection and Compaction Equipment). This equipment includes the following:

(1) Rear-loading compaction equipment.

(2) Side-loading compaction equipment.

(3) Tilt-frame equipment.

(4) Hoist-type equipment.

(5) Satellite vehicles.

(6) Special collection compaction equipment.

(7) Stationary compaction equipment.

d. Compactor vehicles shall be enclosed by metal and be leak-resistant.

e. Safety devices including, but not limited to, the following, should be provided on all collection vehicles, excluding satellite vehicles or any vehicle having a maximum gross weight of 2.3 metric tons (2.5 tons) or less:

(1) Exterior rearview mirrors.

(2) Backup lights.

(3) Four-way emergency flashers.

(4) Safe places for crew personnel to ride on short trips, with handholds and platforms big enough to prevent slipping.

(5) Readily accessible first aid equipment.

(6) Easily accessible fire extinguisher.

(7) Audible reverse warning device.

f. In addition to vehicle size, consideration shall be given to local weight and height limits for all roads over which the vehicle will travel, turning radius, and loading height in the unloading position to ensure overhead clearance in transfer stations, service buildings, incinerators, or other facilities. There are two types of engines currently available for power collection vehicles: gasoline or diesel engines. Diesel engines are more expensive; but over the life of the engine, the operating, maintenance and fuel cost savings of the diesel engine exceed the initial cost difference. Diesel engines also produce less air pollution.

3.3.2 Principal Types of Vehicles. There are many types of collection vehicles available, and many of them are designed for specific jobs. (A careful study and evaluation should be made before selection of special equipment.) However, collection vehicles fall into two basic categories, waste-haul and container-haul. With the waste-haul vehicle, solid wastes are collected from individual containers by emptying the contents into the collection vehicle. The container-haul vehicle collects and transports the filled container.

3.3.2.1 Waste-Haul Vehicles. The most common type of waste-haul vehicle is the compactor truck of which there are three basic types: front-loading, side-loading, and rear-loading.

a. Front-loading compactor trucks (Figure 3-7), which range in capacity from 15.3 to 39.8 cubic meters (20 to 52 cubic yards), collect from bulk containers. The solid waste is loaded into the top front and is compacted by a hydraulic ram which pushes the solid waste against the rear of the body. An optional 3.8-cubic-meter (five-cubic-yard) bubble tailgate is becoming popular on these vehicles.

b. Side-loading compactor trucks (Figure 3-8) range in capacity from 3.8 to 28.3 cubic meters (5 to 37 cubic yards). Although these vehicles can collect from bulk containers, they are mainly used for manual loading. The solid waste is loaded from hand containers (garbage cans, plastic bags) in the front left or front right side, and compacted in the same manner as a front loader.

c. Rear-loading compactor trucks (Figure 3-9) range in capacity from 4.6 to 23.7 cubic meters (6 to 31 cubic yards). These trucks can also collect from bulk containers but are used

1

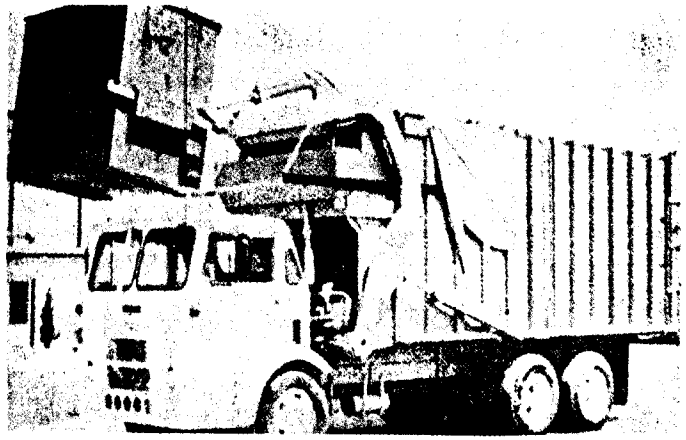

2

3

4

FIGURE 3-7
Front-Loading Compactor Vehicle Emptying a Self-Loading Container

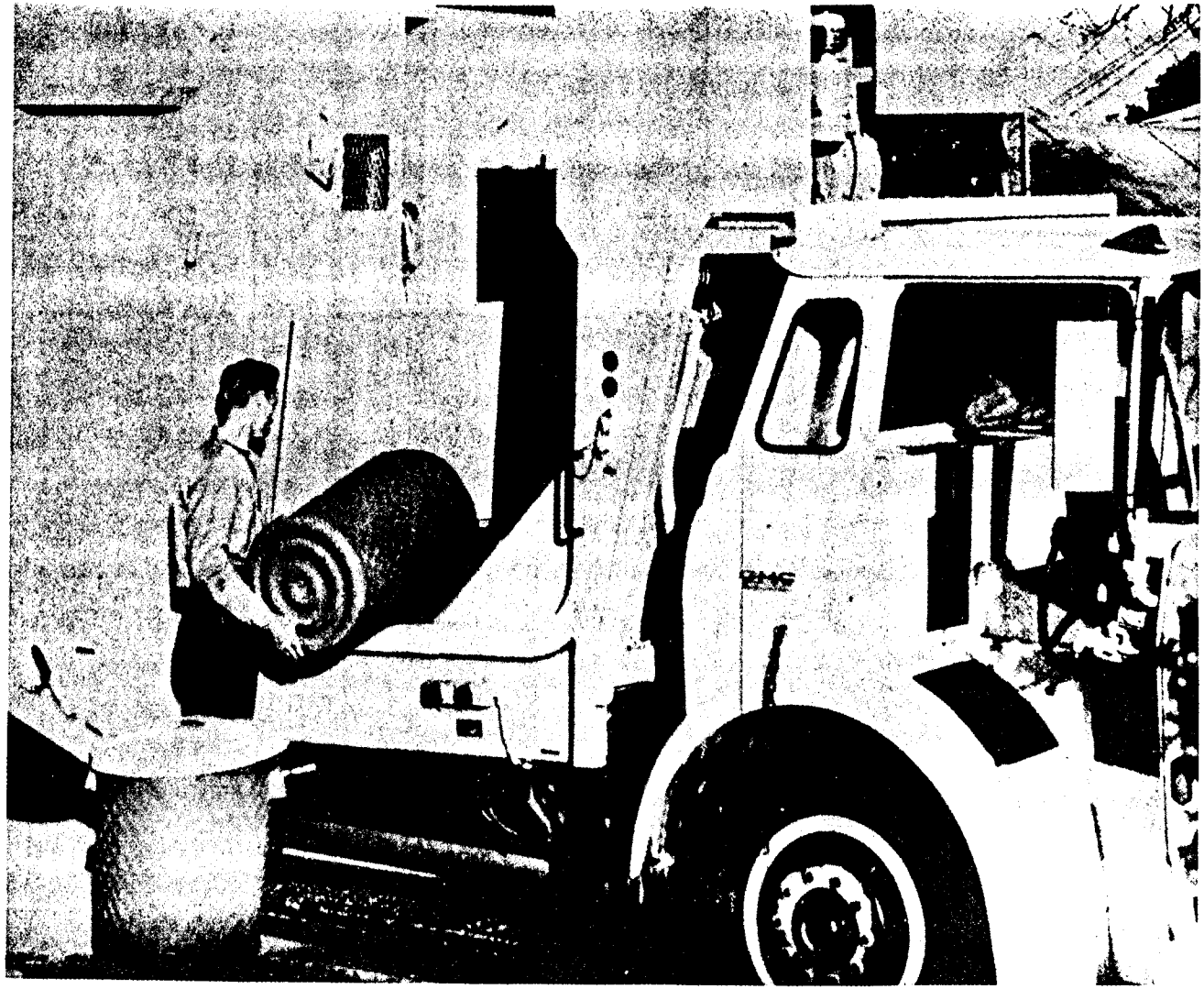

FIGURE 3-8
Side-Loading Compactor Vehicle--Manual Loading

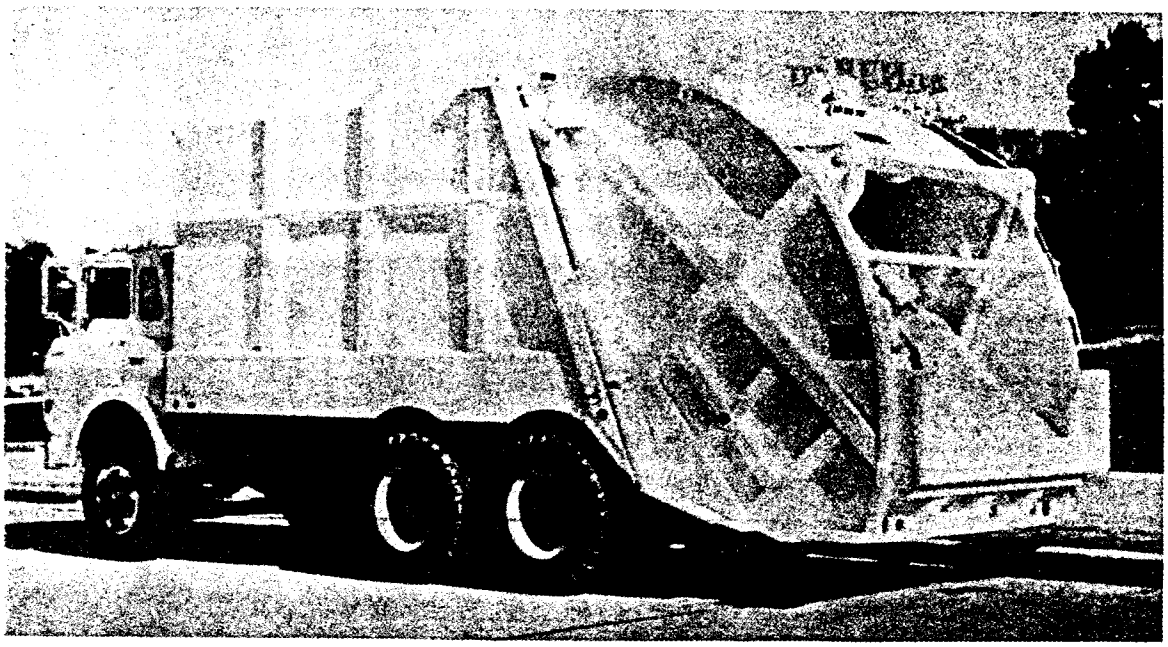

FIGURE 3-9
Typical Rear-Loading Compactor Vehicle

primarily for manual loading. The solid waste is loaded into a rear hopper and compacted by pushing the solid waste toward the front of the body.

d. Specialized vehicle equipment is available for the handling of barrels. A pincher-type mechanism (Figure 3-10) replaces the fork lift on the front- and side-loading compactor vehicles. Equipment of this type is being used effectively for one-man collection. This mechanism is capable of lifting 300 to 1100 liters (80- to 300-gallon) containers over obstacles and dumping the solid waste into the vehicle.

e. Satellite vehicles are small three- or four-wheeled vehicles (Figure 3-11) that shuttle between collection points and a compactor truck. Scooter-type vehicles (three-wheel only) are usually fitted with 0.8- to 2.3-cubic-meter (one- to three-cubic-yard) capacity, non-compacting containers equipped with a hydraulic dump mechanism. In addition to the three- or four-wheeled vehicles, there are detachable-body module compactor vehicles (Figure 3-12).

3.3.2.2 Container-Haul Vehicles. Two common types of container-haul vehicles are the hoist-and-haul vehicle used with lugger boxes, and the tilt-frame truck used with roll-off

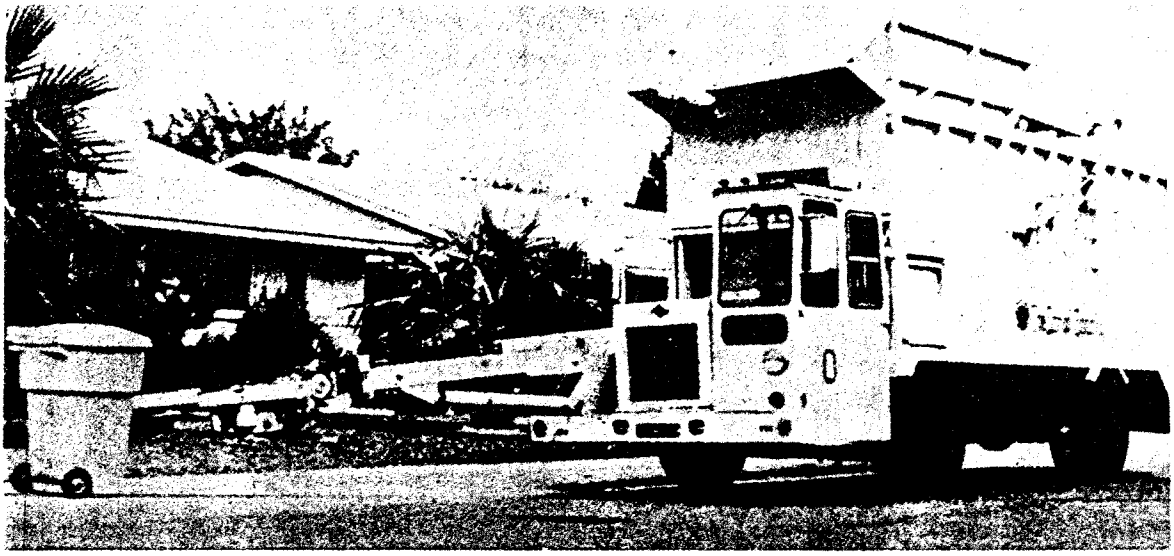

FIGURE 3-10
Barrel-Snatcher Compactor Vehicle

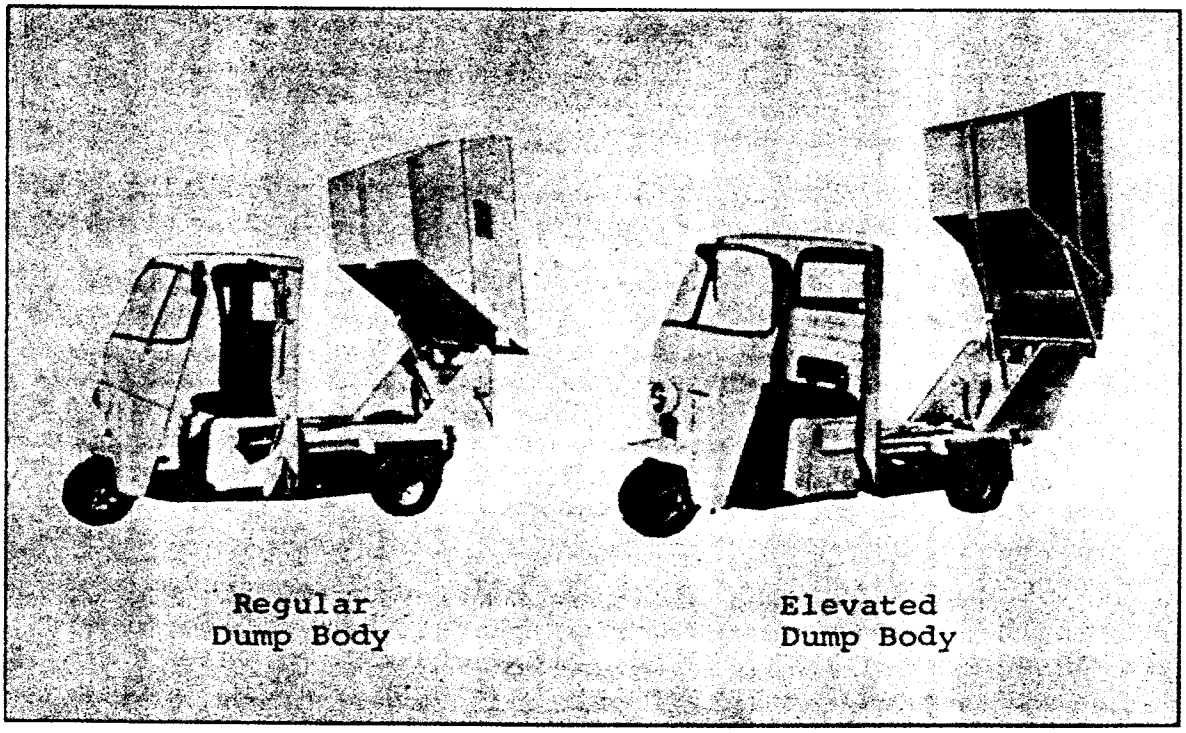

FIGURE 3-11
Typical Scooter-Type Satellite Collection Vehicles

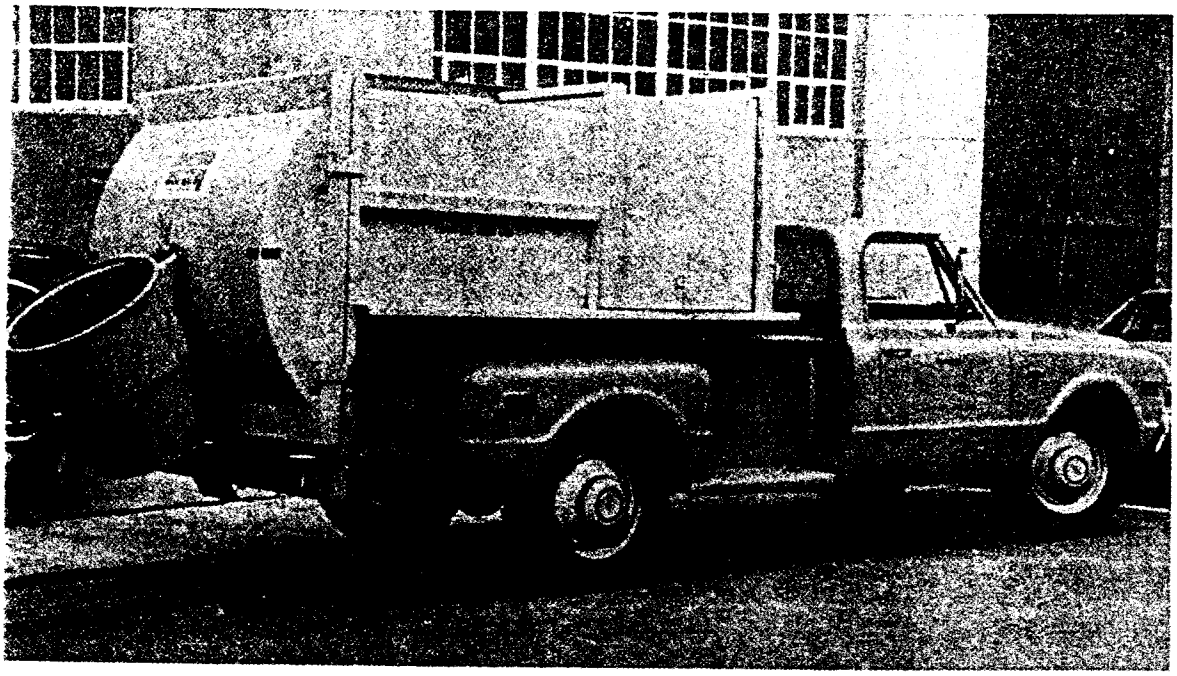

FIGURE 3-12
Detachable-Body Module Compactor Vehicle
(Waste is loaded from opposite side.)

containers and/or large, enclosed compaction containers. See paragraphs 3.2.1.2, 3.2.1.3, and 3.2.1.4. Figure 3-13 is a typical hoist-and-haul vehicle and Figure 3-14 shows the sequence of operations of a roll-off container being loaded onto a tilt-frame truck.

3.3.3 Maintenance and Operation. Compaction, collection, and transportation equipment should be operated and maintained so that health and safety hazards to solid waste management personnel and the public will be minimized. The equipment shall be kept clean to prevent the attraction of flies and rodents and the creation of nuisances. Maintain and service the vehicles according to manufacturers' recommendations and the maintenance programs of each military service. The Air Force, Army and Navy vehicle maintenance manuals are, respectively, T.O.-00-20B-5 and AFM 77-3-10, Volumes 1 and 2; TAMMAS 38-750; and Management of Transportation Equipment, NAVFAC P-300. Periodic safety checks should include inspection of brakes, windshield wipers, taillights, backup lights, audible reverse warning devices, tires and hydraulic systems. Any irregularities should be repaired before the vehicle is used. Vehicles should also be thoroughly cleaned at least once a week, and solid waste shall not be allowed to remain in collection vehicles overnight. Solid waste collection systems should be

FIGURE 3-13
Hoist-and-Haul Vehicle without Container

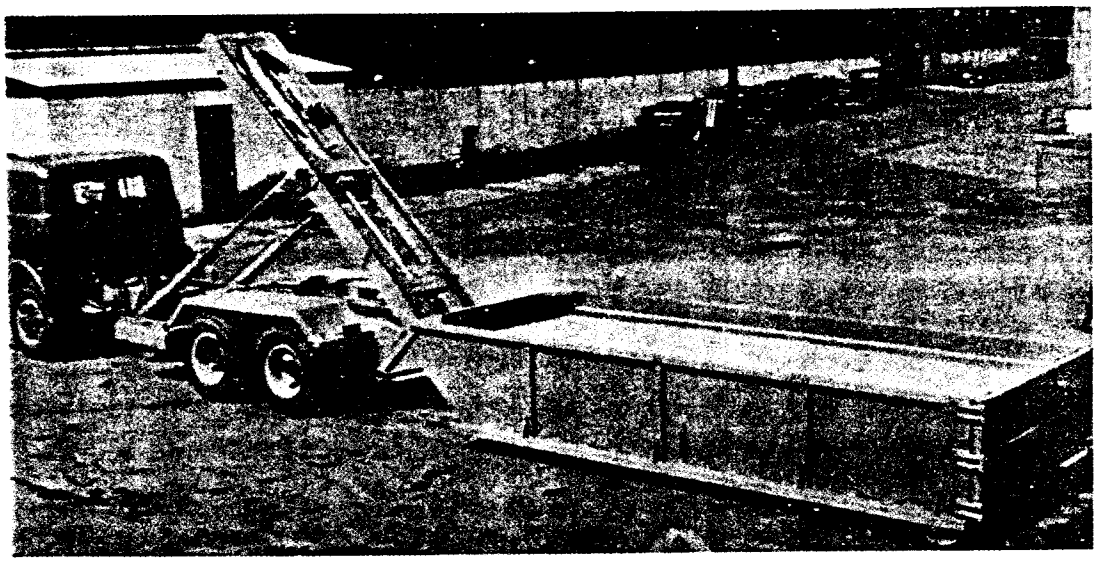

FIGURE 3-14
Loading a Roll-Off Container onto a Tilt-Frame Truck

designed to minimize fuel consumption. The following vehicle practices will help to conserve fuel:

a. Minimize driving distances and delays. See paragraph 3.4.4.1.

b. Schedule regular tune-ups and maintain tires at recommended pressures.

c. Use compactor trucks to reduce the number of trips to the disposal site.

3.4 PLANNING COLLECTION. A planned collection system is necessary to achieve efficient and effective removal of waste. Proper planning includes the selection of appropriate equipment, safety, and proper record keeping. The following paragraphs discuss these elements of the collection system.

3.4.1 Equipment Selection and Crew Size. Many factors must be considered before selecting a vehicle and determining crew size. For example, crew size selection will be affected by the amount of waste per stop, number and location of collection points, type of storage containers, haul time to the unloading point, wage rates, labor preference, and management. In high density population areas, the larger quantity of waste at a given stop makes larger trucks with three-man crews economically competitive with smaller crew sizes. Vehicle selection is affected by such local constraints as haul time to the transfer or disposal site, street or alley width, intersection size, types and amounts of waste (hopper size requirements), and highway limitations (number of axles required). Haul time is important because collection time is reduced by the amount of time spent driving to the unloading site. Haul time can be reduced by reducing the number of trips to the unloading site, by increasing vehicle capacity, or by locating an unloading site (transfer station) closer to the collection area.

3.4.2 Combined Versus Separate Collection. There are obvious advantages when all refuse can be collected at one time. Combined collections reduce handling and truck trips, permit maximum use of collection vehicles and are strongly recommended. The ultimate method of disposition, resource recovery potential, and the degree of separation dictate the need for separate collections. Separate collections are generally made for the following conditions:

a. If incineration is used, bulky refuse items and non-combustible rubbish should be collected separately and not delivered to the incinerator.

b. Solid waste that is recyclable or suitable for resource recovery should be collected separately.

c. After ashes have been quenched or sufficient time has elapsed to ensure cooling of the ashes, they should be collected separately.

3.4.3 Collection Frequency Requirements. Collections may be made on a scheduled route basis, or on a non-scheduled demand or call basis. The frequency of collection depends on the rate of generation, the size and number of storage containers available, and the types of waste to be collected. Scheduled

collections promote efficient use of equipment; however, collection on demand or call may be more efficient where the rate of generation is highly irregular such as at ship berths. For Air Force installations, AFR 91-1 applies to collection schedules in family housing areas. The following guidelines shall apply to scheduled collections:

a. Solid wastes containing little or no food wastes shall be normally collected at least once per week, however, the frequency may be twice every seven calendar days if required to prevent the propagation or attraction of flies and rodents and the creation of nuisances. Deviations of frequency of collection may be adopted when base public health officials concur.

b. Where the refuse includes large amounts of putrescible food waste, the collection frequency should be increased. Garbage should be collected daily from pickup stations serving large food-dispensing facilities and three times weekly from smaller messing facilities, clubs, and exchange cafeterias.

c. Bulky wastes shall be collected at least once every three months.

d. The minimum collection frequency, commensurate with public health and safety, should be adopted to minimize collection costs and fuel consumption. Generation rates, waste composition, and storage capacity should be considered in establishing collection frequencies.

e. When solid wastes are separated at the point of storage into various categories for recycling or resource recovery, collection frequency should be designated for each waste category.

3.4.4 Route Layout. The route layout process begins with an analysis of the installation layout. The information needed includes:

a. Number and size of storage containers.

b. Avaerage weight and composition of solid waste generated.

c. Location (building number) and distance from street or alley.

d. Obstructions such as one-way streets, gates, steps, and narrow passages.

e. Distance between collection points.

3.4.4.1 Designing Efficient Routing. Properly designed collection routes minimize the non-collection distances and delay times for each vehicle. The string mechanical analog method provides a quick check for an optimal route with the use of a map of the installation, sets of pins to mark container locations, and a string with an attached weight. The setup for this procedure is shown in Figure 3-15. Different colored pins can be used for different collection routes (for example, collection on different days for different types of waste). The basic approach is to start the string at the motor pool and loop it in sequence around the container-location pins for a particular route. After completing the route, adjust the string (by trial and error changes) in the order in which it is looped around the pins. When the weight is at its lowest point the string represents the shortest and probably the optimal route for the collection vehicle. Analyze this model for possible restrictions such as one-way streets and obstacles. Again adjust as necessary. Optimal solutions will approach a circle around the installation.

3.4.5 Crew Collection Methods. Although there are a number of collection methods, the more common collection methods include:

a. Assigned Crew. The crew is assigned to a collection vehicle for the entire working day. Assigned crew collection is efficient when the travel time to the disposal site is short.

b. Shuttle System. While their driver is traveling to and from the disposal site, the crew is shuttled to help another crew. This method is more efficient when the travel time to the disposal site is long, but this method requires a dispatcher to coordinate the crews.

c. Reservoir System. All crews work a large (usually centralized) area after they have completed their assigned routes. No crew is dismissed until the entire reservoir area has been collected.

d. One Side of the Street. The collection is made on one side of the street when the streets are wide, heavily traveled, or have a median divider.

e. Both Sides of the Street. The collection is made on both sides of the street when the streets are narrow, lightly traveled, one-way, or when bulk containers are used and have to be mechanically handled.

3.4.6 Safety. The collection and transfer system shall be operated so as to protect the health and safety of all

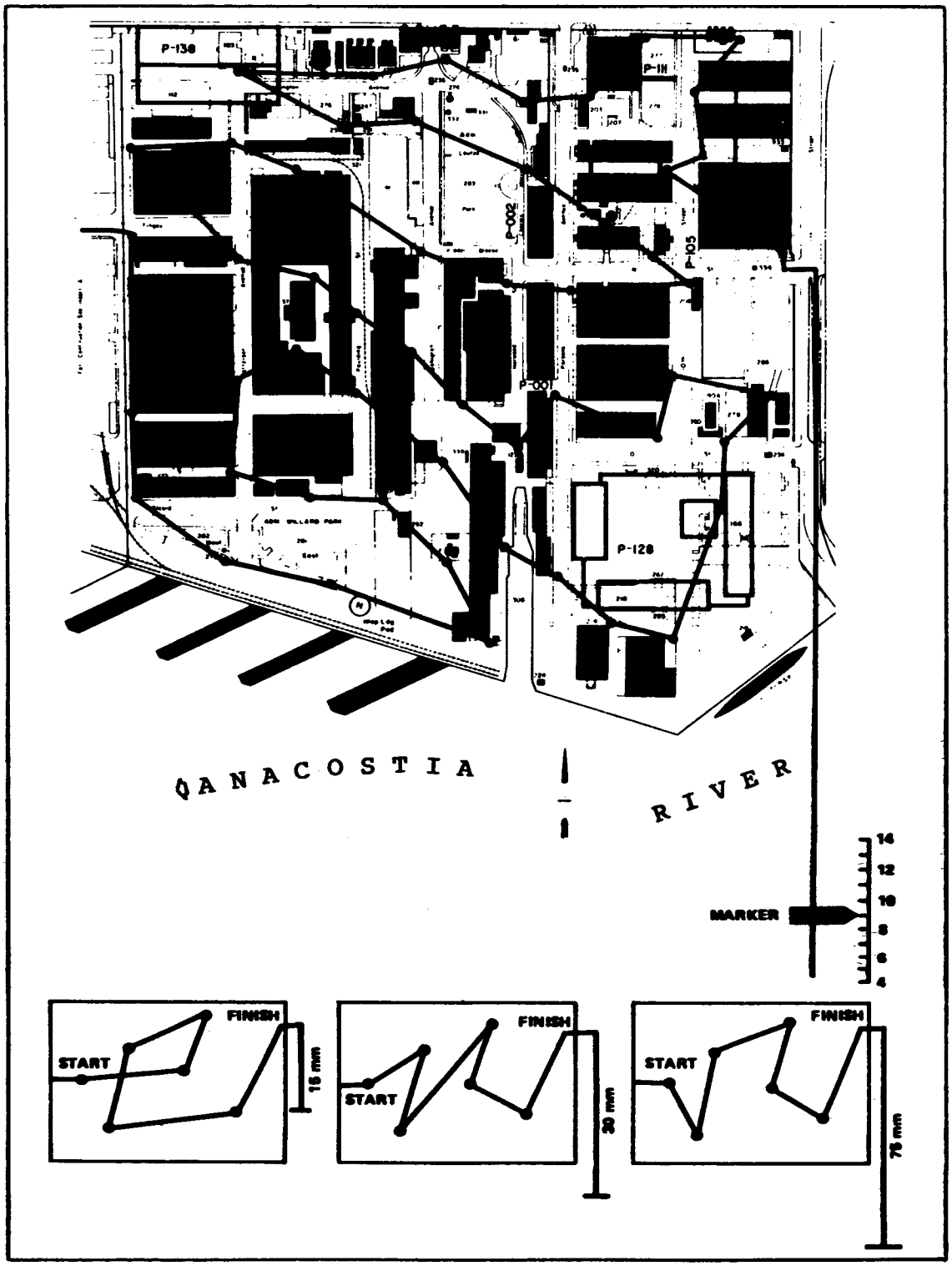

FIGURE 3-15
Routing by the String Method

personnel. Regulations promulgated by Occupational Safety and Health Administration (OSHA) shall apply. The following general safety provisions shall apply to collection operations.

a. A safety manual shall be provided for use by the collection personnel. This manual should include specific information on local conditions, equipment, methods and procedures. All personnel should receive instructions and training in safe container and waste handling techniques and safe collection equipment operation.

b. Personnel safety devices such as safety glasses, gloves, respirators, and footwear shall be used by collection personnel, as appropriate. Refer to subpart 1 of OSHA Standards for General Industry.

c. Scavenging shall be prohibited at all times to avoid injury and to prevent interference with collection operations.

d. The potential for physical contact between the collectors and the waste, both solid and liquid, shall be minimized. When conducting manual carryout collection, a leakproof carrying container shall be used. Collection vehicles and equipment shall be operated in a safe, efficient manner, strictly obeying all applicable traffic and other laws. The collection vehicle operator shall be responsible for immediate cleanup of all spillage caused by his operations, and for avoiding any undue noise disturbances in residential areas.

3.5 TRANSFER OPERATIONS. The transfer operation is necessary when the final disposal site is located a great distance from the collection area. If direct hauling of the waste in the collection vehicle is uneconomical, a transfer operation is used. There are two types of transfer operations, those with transfer stations and those without transfer stations.

3.5.1 With Transfer Stations. A transfer station is a central facility for processing solid waste collected in a particular area. At the transfer station the waste can be compacted, baled or processed in some other manner. The waste is then placed in large containers, or directly on large truck trailers, and hauled to the disposal site. The size and design of the transfer station depends on the amount of refuse collected, site availability and location, collection and transfer equipment availability, and the final method of waste disposition. The station may only be designed for transfer of the loads from collection vehicles to bulk haulage vehicles; however, it can be a more complex facility with a full waste separation and resource recovery plant.

3.5.1.1 Transfer Station Layout. The basic configurations for transfer stations are:

a. Direct gravity dump from the collection vehicle into the transfer trailer (Figure 3-16). The material can be dumped into the transfer trailer without compaction, leveled with a backhoe, or compacted by a push-plate mechanism within the trailer.

b. Direct gravity dump from the collection vehicle into a charge hopper (Figure 3-17). Solid waste is then compressed by the stationary compactor ram into the transfer trailer.

c. Unloading of solid waste by the collection vehicle into a designated floor area where the waste is conveyed to the transfer trailer by a front-end loader.

d. Gravity dump from the collection vehicle into a storage pit, where solid waste is crushed and moved by crawler tractor into a loading hopper; solid waste is fed automatically by a hydraulically actuated bulkhead (push-pit technique) to a stationary compactor which packs the solid waste into the transfer trailer; and the solid waste is moved by conveyor belt into the transfer trailer.

3.5.2 Without Transfer Stations. This type of transfer operation uses mobile transfer equipment and is usually considered the collection system. Types include the train or scooter system, satellite system, and detachable container system. Properly conducted, the transfer operation provides an economical delivery at the disposal site, maintains the proper sanitation, and avoids confusion or loss of time.

3.5.3 Transfer Hauling Alternatives. The three basic transportation alternatives from the transfer station to the disposal site are by barge, railcar, and trailer. Barges appear to have potential for future use only in specialized applications. Rail transfer is not utilized to any significant extent. However, because of the tremendous concentration of solid waste in urban areas, direct rail haul to outlying disposal sites, possibly including quarries and strip mines, has potential for both final waste disposal and beneficial land reclamation. With this method it is recommended that solid waste be baled and shipped in boxcars or gondolas. The large-volume transfer trailer is presently the most common method of transport. Transfer trailers are large containers constructed on a semi-trailer. They are designed for large capacity, highway hauling of solid waste. Transfer trailers may be one of three basic designs:

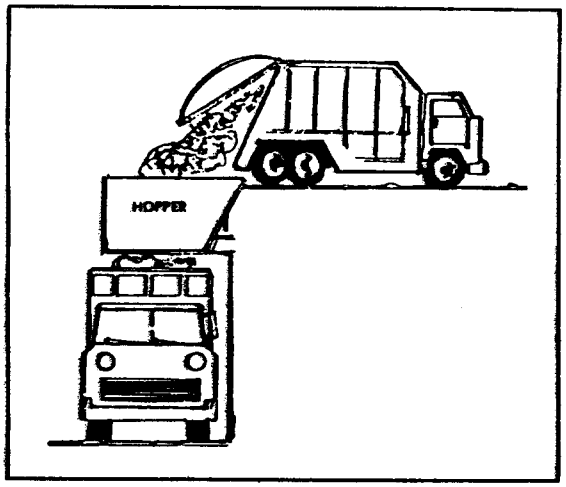

FIGURE 3-16
Direct Transfer to
Open-Top Trailer

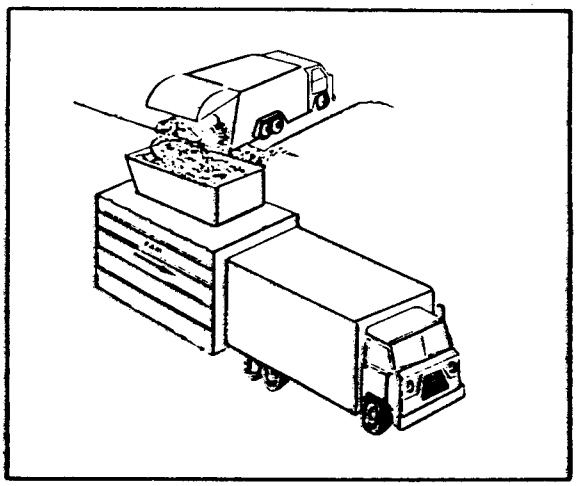

FIGURE 3-17
Transfer to Stationary
Compactor

a. The first is essentially an open box into which wastes are placed by stationary equipment at the transfer station. These trailers are emptied by gravity or pull-off devices.

b. The second type of transfer trailer is enclosed and equipped with a hydraulic push-out mechanism for rear unloading. These trailers are loaded at the transfer station by stationary compactors (Figure 3-18).

c. The third trailer type houses a self-contained compactor unit. At the disposal site, the ram of the compactor unit is also used to push the waste out the rear doors of the trailer (Figure 3-19).

FIGURE 3-18
Transfer Trailer Unloading

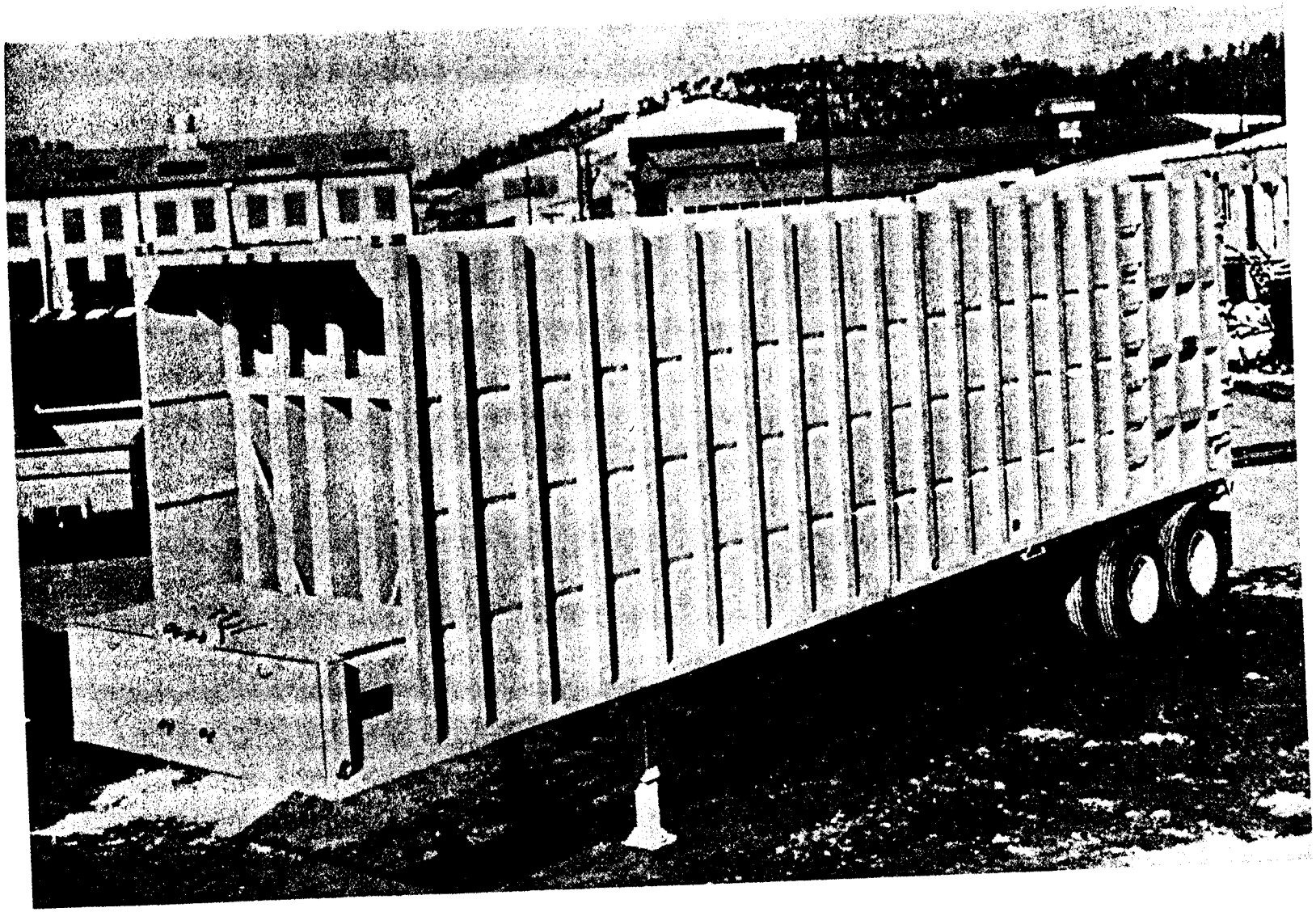

FIGURE 3-19
Compaction Transfer Trailer

CHAPTER 4. DISPOSAL

4.1 OPTIONS FOR DISPOSAL. The material in this manual differs from previous publications in its approach to the ultimate disposal of solid wastes. This approach is dictated by new requirements to protect the environment, and by changing economic conditions and attitudes toward solid waste. The material and potential fuel value of the solid waste stream have steadily increased to the point where, at many military installations, they can be considered to be a resource. Also, research into conventional disposal means, such as incineration and landfill, has shown that incineration is a refuse volume reduction process which presently provides minimal resource recovery, requires costly air and water pollution controls, and produces a residue requiring sanitary landfill as a means of disposal. Similarly, sanitary landfill is a means of disposal that requires careful planning and operation to minimize surface and ground water pollution, maintain sanitary conditions, and provide aesthetically acceptable disposal. The emphasis of this chapter is on resource recovery. Although resource recovery should be considered before selecting a conventional method of waste disposal, it is not the absolute answer. A complete solid waste disposal system may have to consider incineration and landfill. Even with a complete system of resource recovery and incineration, landfill is required to handle residues. If these facilities are temporarily unavailable, due to corrective or periodic maintenance, a landfill is required as a backup. Figure 4-1 shows the possible flow paths for solid wastes from generation to disposal. As previously discussed, the landfill is the ultimate depository for all wastes which are not recycled or discharged to the atmosphere by incineration. Figure 4-2 is a guide for determining the cost-effective thresholds of various disposal technologies for different rates of generation.

4.2 RESOURCE RECOVERY. A successful resource recovery operation requires a departure from conventional attitudes toward military installation waste management. Prior to selecting a resource recovery system, consideration and analysis should be given to such matters as:

a. A detailed analysis of the current solid waste management system at the installation including:

(1) Generation rates.

(2) Types of waste.

(3) Collection and disposal costs.

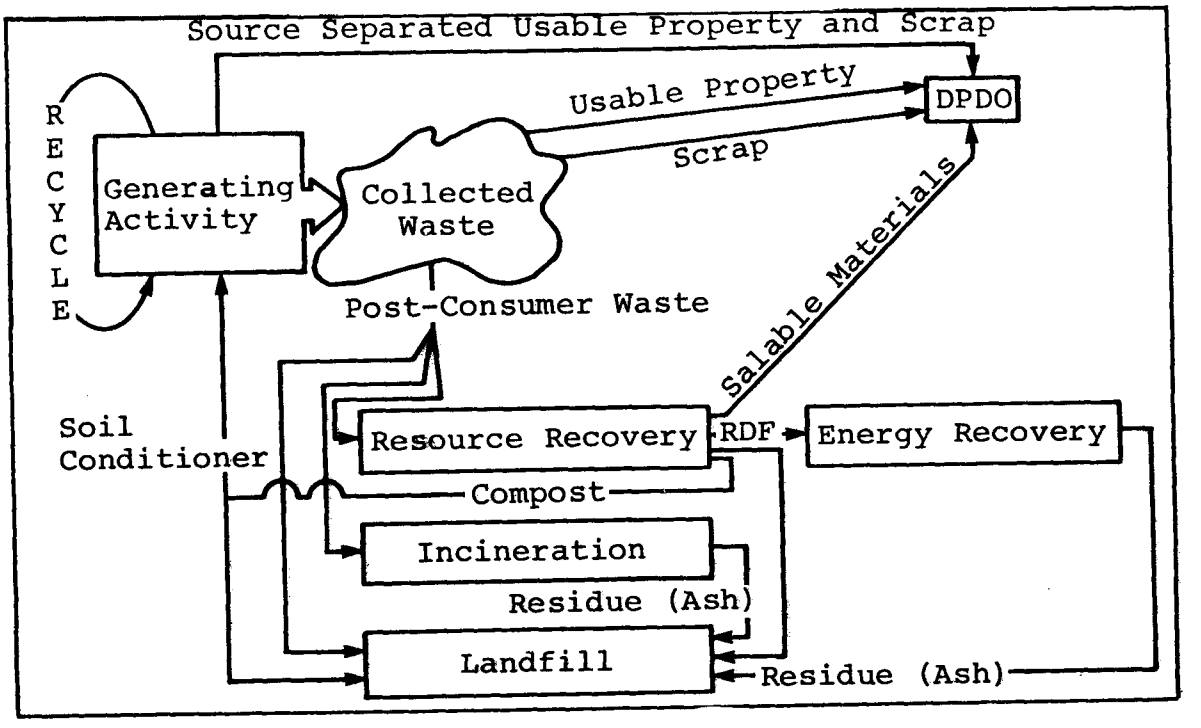

FIGURE 4-1
Flow Path of Solid Waste from
Generation to Disposition

(4) Landfill life.

(5) Fossil fuel and steam requirements.

b. Installation requirements.

c. Markets for reclaimed wastes.

d. Economic advantages of joint operation of regional facilities with other Federal activities and local governments.

Detailed guidance for developing and implementing an economically and environmentally sound resource recovery operation is found in the Department of the Navy, Naval Facilities Engineering Command program for the recovery and reuse of refuse resources, the R^4 Decision Guide, NESO 20.2-008. The following paragraphs introduce the available technology that applies to resource recovery at military installations.

4.2.1 Resource and Energy Recovery Technology. Included in a list of suitable equipment and systems for processing the waste stream for resource recovery are compactors, balers,

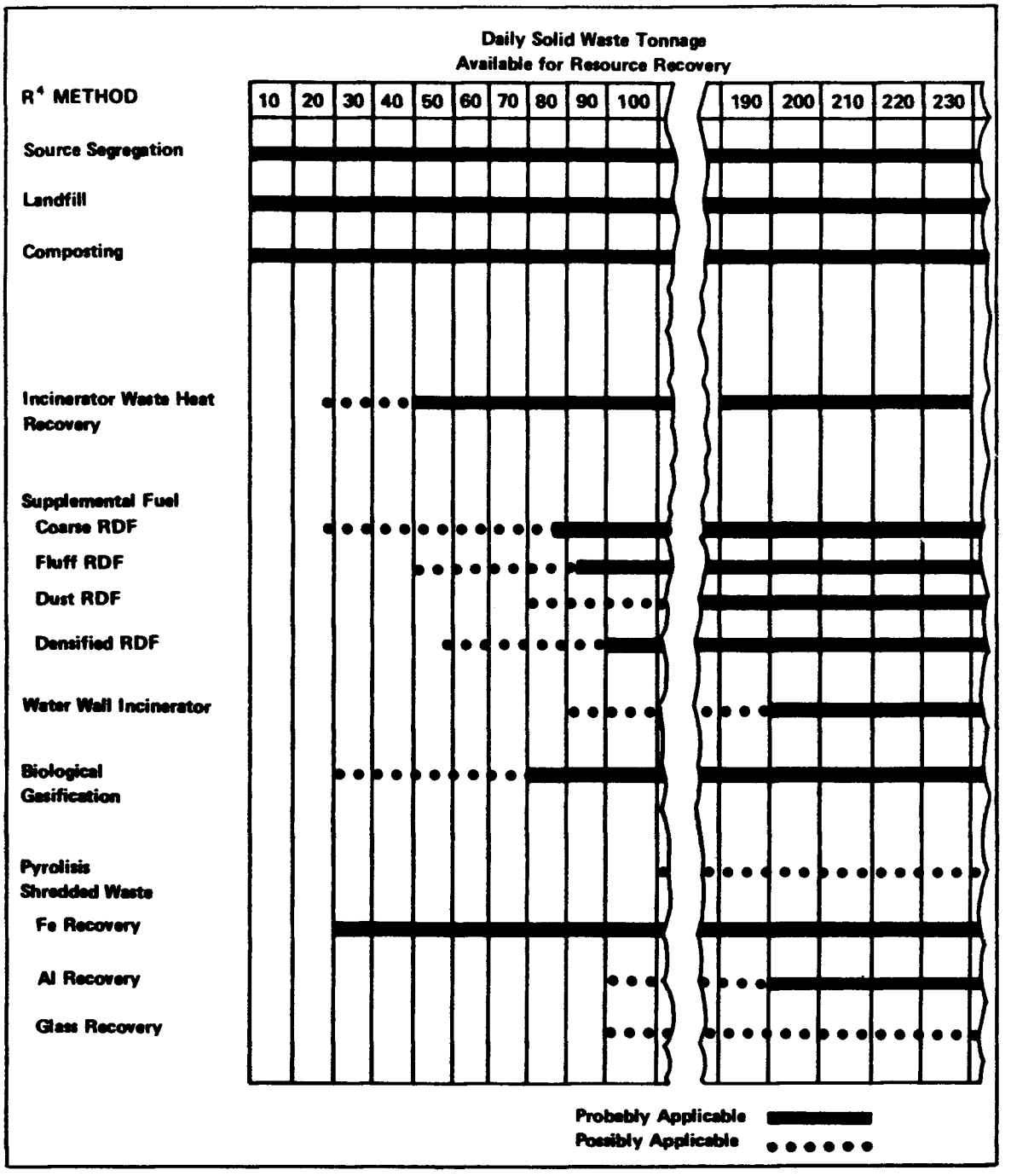

FIGURE 4-2
Cost-Effective Thresholds of Recovery and Reuse of Refuse Resources (R^4) Systems

shredders, separators, fuel processing and heat recovery units, and composting facilities and techniques. A detailed description of balers and compactors to be used by waste generating activities for pre-collection processing and source separation is provided in paragraph 2.2. A brief summary of the other available technologies is discussed in the following paragraphs; for a detailed discussion of resource recovery, refer to the R^4 Decision Guide.

4.2.1.1 Shredders. A shredder or hammermill is used for size-reduction of dry solid waste. They are available in either stationary or portable models. Air classification (into light and heavy fractions) and metals segregation equipment are more effective once the waste has been milled. Additionally, milled waste compacts very well when it is landfilled.

a. Primary Shredding. Primary shredding of solid waste produces a maximum particle size of 15 cm (six inches). The size is controlled by bar grates at the shredder discharge port. Primary shredders are used where coarse material is satisfactory and are necessary unit processes in the production of refuse derived fuel.

b. Secondary Shredding. This method of shredding produces a 3- to 5- cm (one- to two-inch) maximum particle size which is also controlled by grates or screens at the shredder discharge port. This unit is normally preceded by primary shredding and air classification when fine material is required by a subsequent process.

4.2.1.2 Separators. These units physically segregate wastes into recyclable components such as metals and glass. Ferrous metals recovery units are to be used as add-on units to other processes that have already produced a stream of primary shredder refuse (Figures 4-3 and 4-4). For glass, a whole-bottle sorter, which can color-sort glass bottles into clear or colored categories, is available as part of a system for processing and storage of source-segregated, recyclable material.

4.2.1.3 Composting. A compost plant will digest any organic solid waste including sewage sludge (Figure 4-5). Composting of solid waste is an alternative in an area where sanitary landfill disposal is unacceptable and installation base loads do not warrant an energy recovery system.

4.2.1.4 Processing the Waste Stream into Refuse Derived Fuel (RDF). RDF is the end product of treating combustible solid waste (with a reasonable BTU rating) to produce a usable fuel. Three processes have been developed and show promise, but are

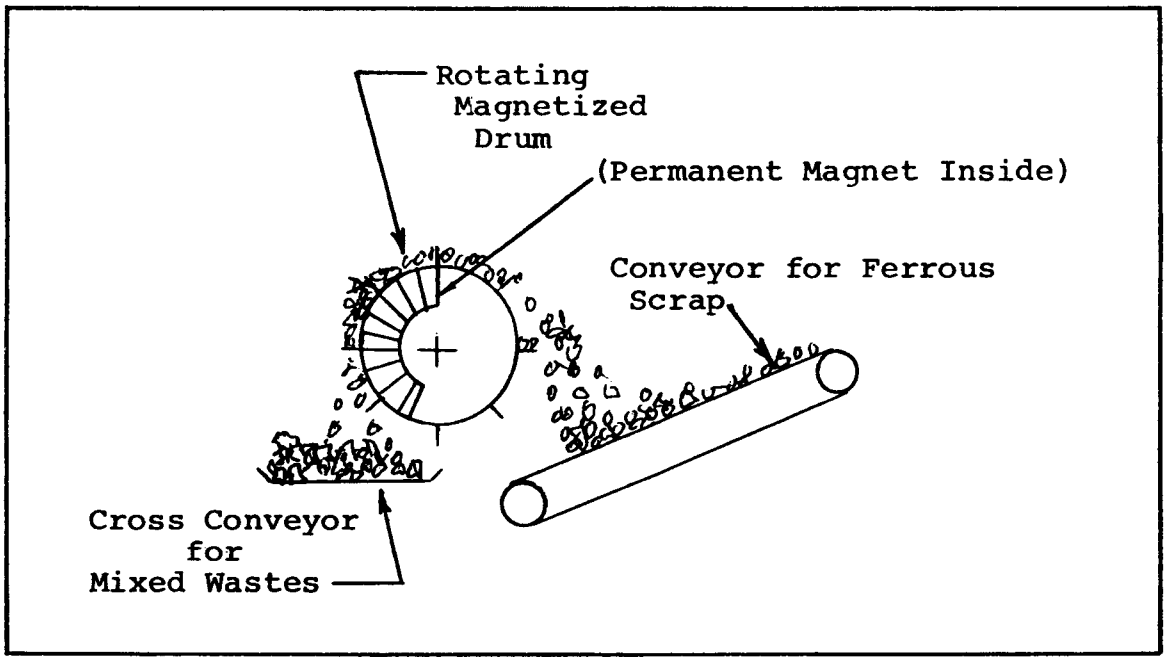

FIGURE 4-3
Typical Permanent Magnet-Type Separator

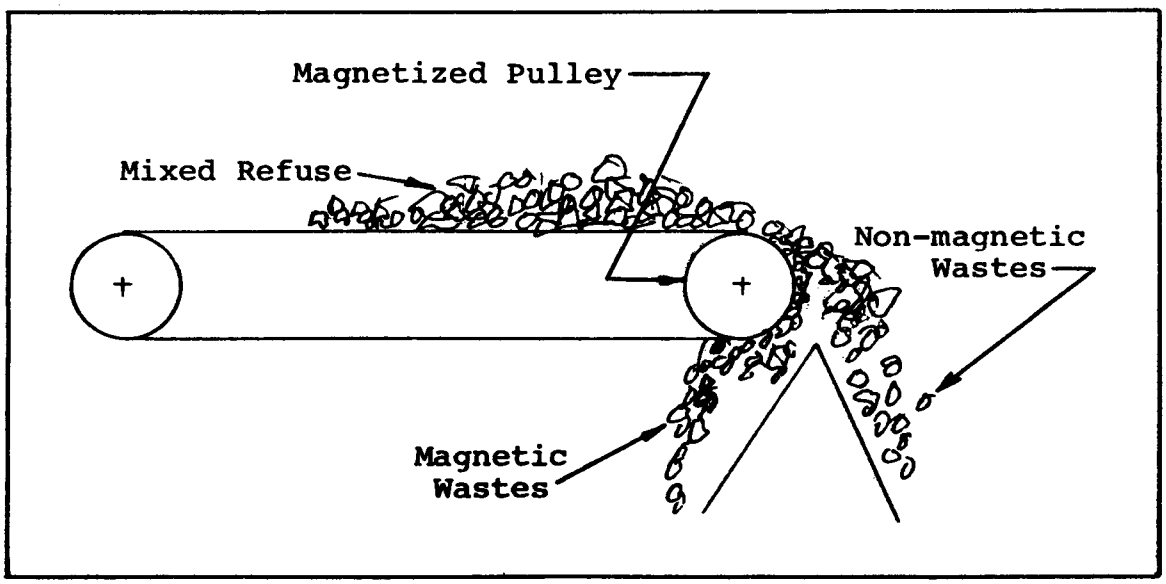

FIGURE 4-4
Typical Magnetic Pulley-Type Separator

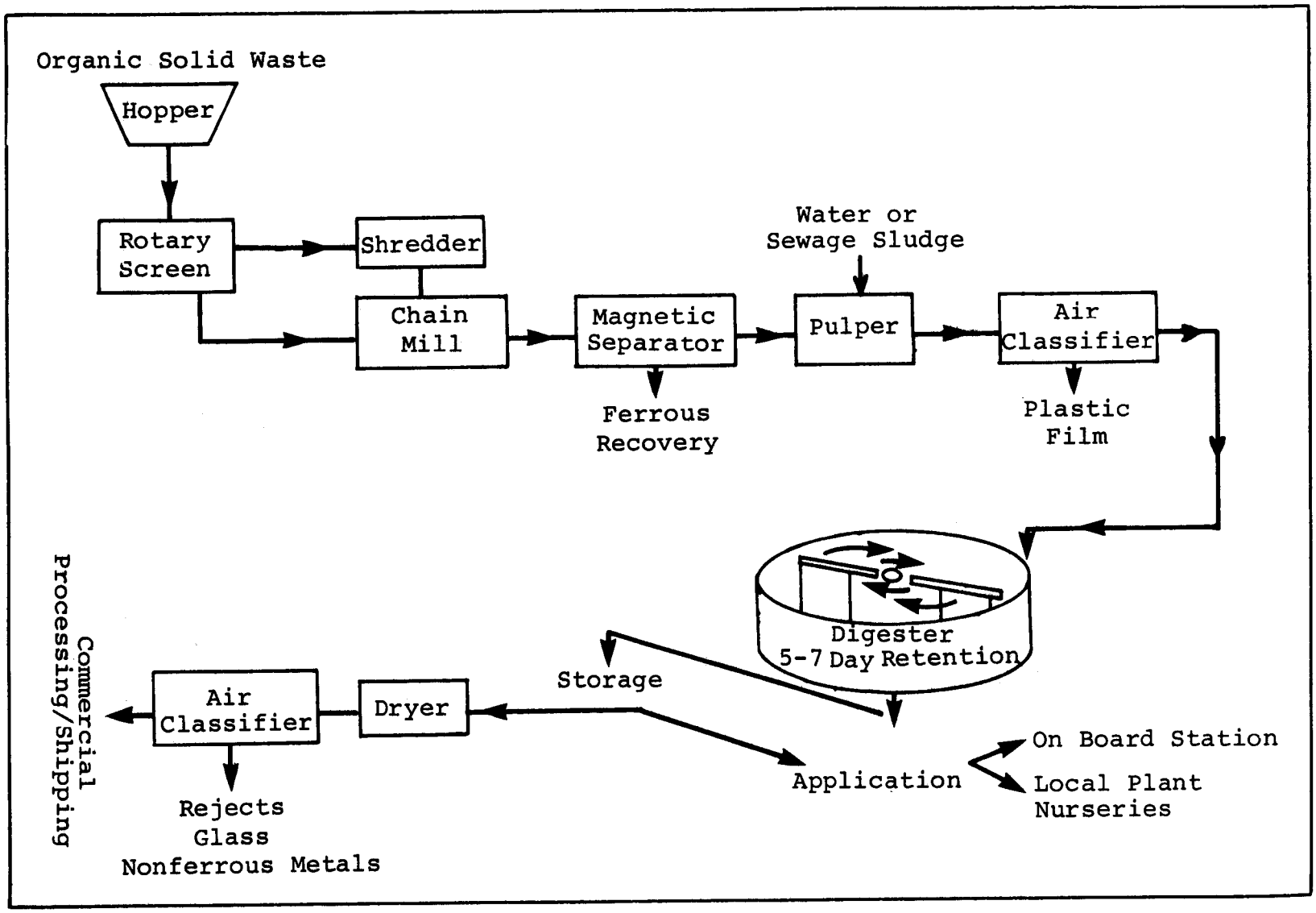

FIGURE 4-5
Solid-Waste Compost Plant

currently too costly and will require intensive design and extensive training. Briefly, these processes are:

a. Coarse and Fluff RDF. Solid waste is converted into a coarse RDF and fluff RDF by removing much of the unburnable waste. The remaining material is fed through a dry air classifier to produce coarse RDF. A secondary mill produces a fluff RDF of smaller particles. Coarse RDF is used in incineration waste heat recovery systems. Fluff RDF can be mixed with coal and burned in spreader stokers.

b. Dust RDF. Conversion of waste to dust RDF produces particles small enough to pass through a 100-mesh screen. Dust RDF can be either mixed with pulverized coal or emulsified with oil and burned in boilers which have been designed for solid fuel burning. It is important to recognize that any finely divided dust, when mixed with air and exposed to a spark may explode. The explosion hazard associated with dust RDF has not yet been firmly established.

c. Densified Refuse Derived Fuel (d-RDF). This fuel is made from any RDF feedstock and consists of small pellets. Once pelletized, its form facilitates easy handling and storage, and transportation to the user is made easier.

4.2.1.5 Package Incineration Boiler Systems to Use RDF. The systems described in the following paragraphs can be cost-beneficial at generation rates as low as 18.1 metric tons (20 tons) per day. For new installations the following systems may be considered:

a. Basket-Grate Incinerator (Figure 4-6).

b. Rotary-Kiln Incinerator (Figure 4-7).

c. Controlled-Air Incinerator (Figures 4-8 and 4-9).

d. Auger Combustor (Figure 4-10).

4.2.1.6 Existing Facilities Where RDF May Be Used. There are various solid waste equipment components currently in existence which can successfully utilize certain forms of RDF without needing any prior modification.

a. Pulverized Coal Boiler. Fluff RDF can be burned in suspension in a modified circular register burner (pulverized coal burner); however, fuel to be burned in this manner should be sufficiently fine so that it will burn completely before reaching the bottom of the furnace.

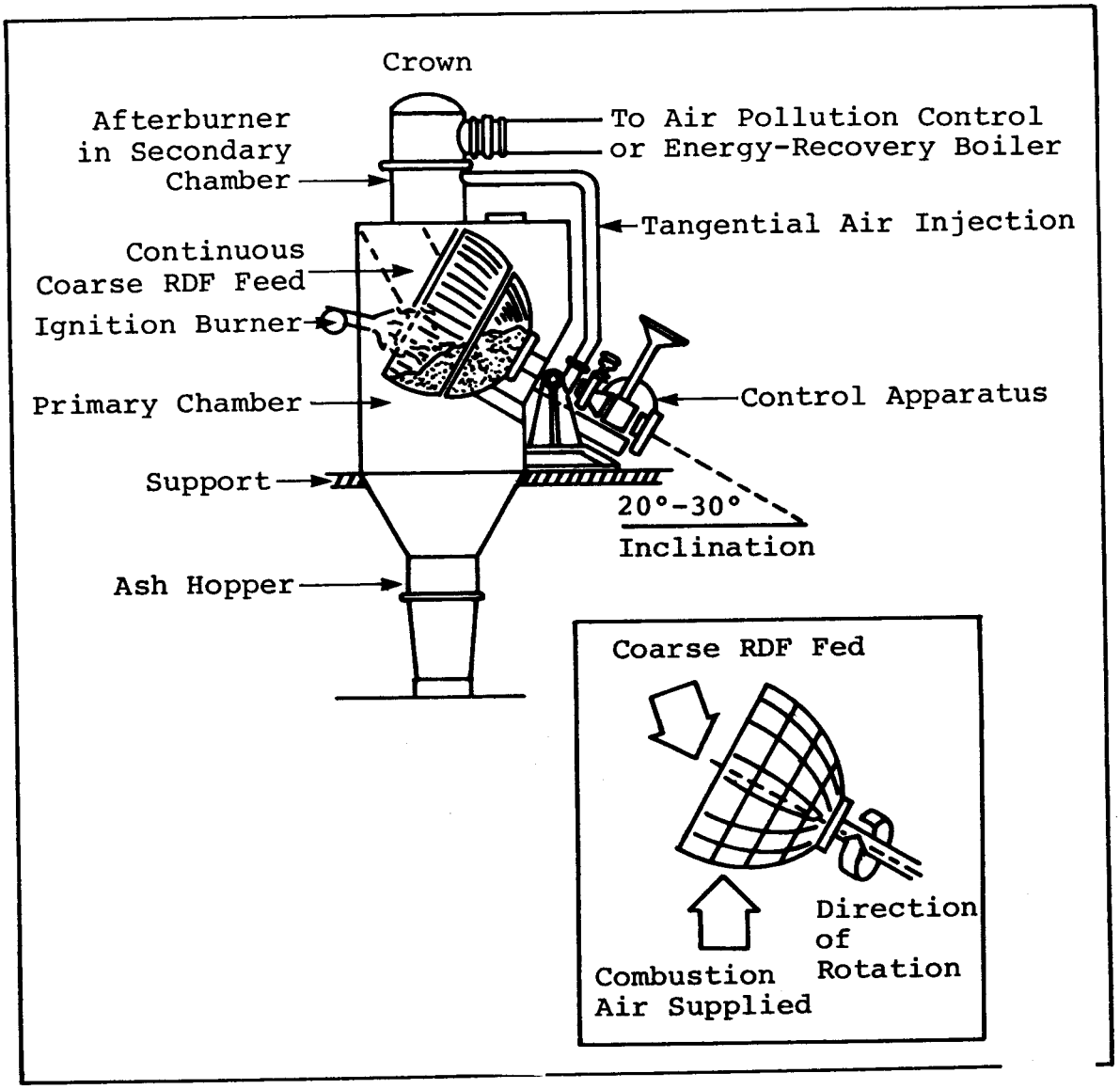

FIGURE 4-6
Basket-Grate Incinerator

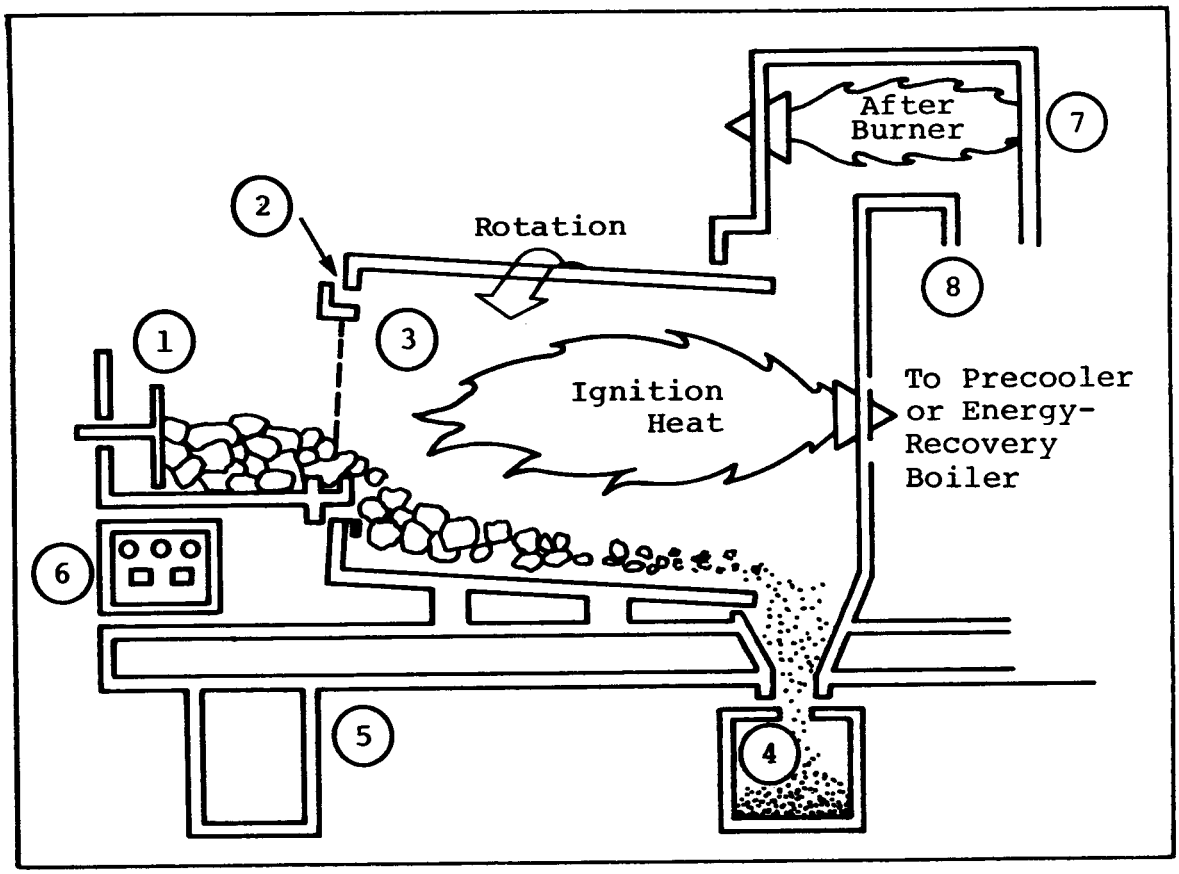

1. Coarse RDF Auto-Feed (Hopper, Pneumatic Feed, Slide Gates)
2. Forced Air
3. Refractory-Lined Rotating Cylinder (Primary Chamber)
4. Ash Hopper (Incombustibles)
5. Support Frame and Piers
6. Control
7. Secondary Chamber
8. To Appurtenances

FIGURE 4-7
Rotary-Kiln Incinerator

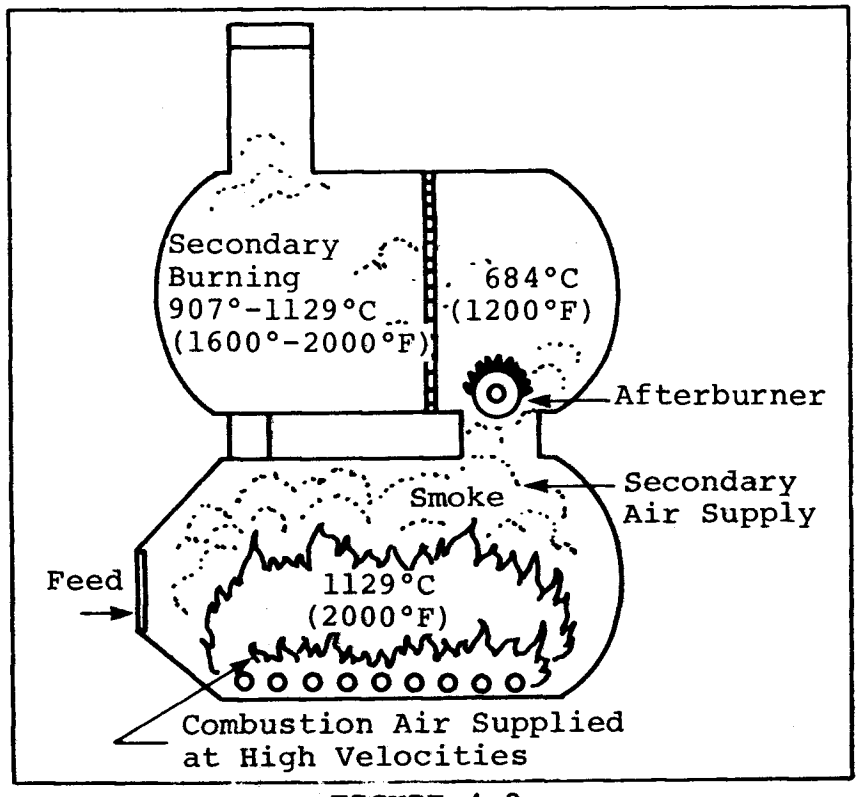

FIGURE 4-8
Controlled-Air Incinerator (First Major Configuration)

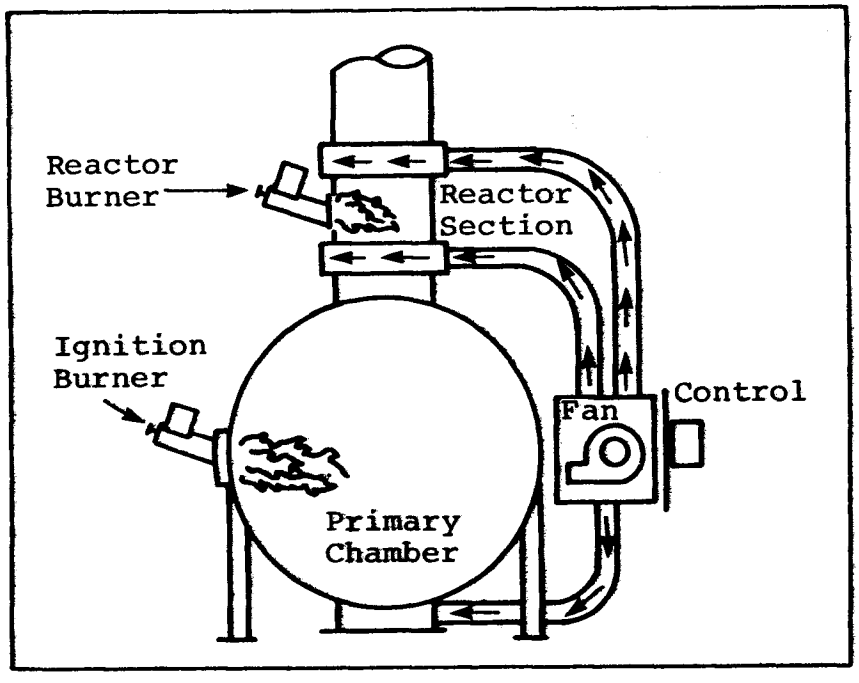

FIGURE 4-9
Controlled-Air Incinerator (Second Major Configuration)

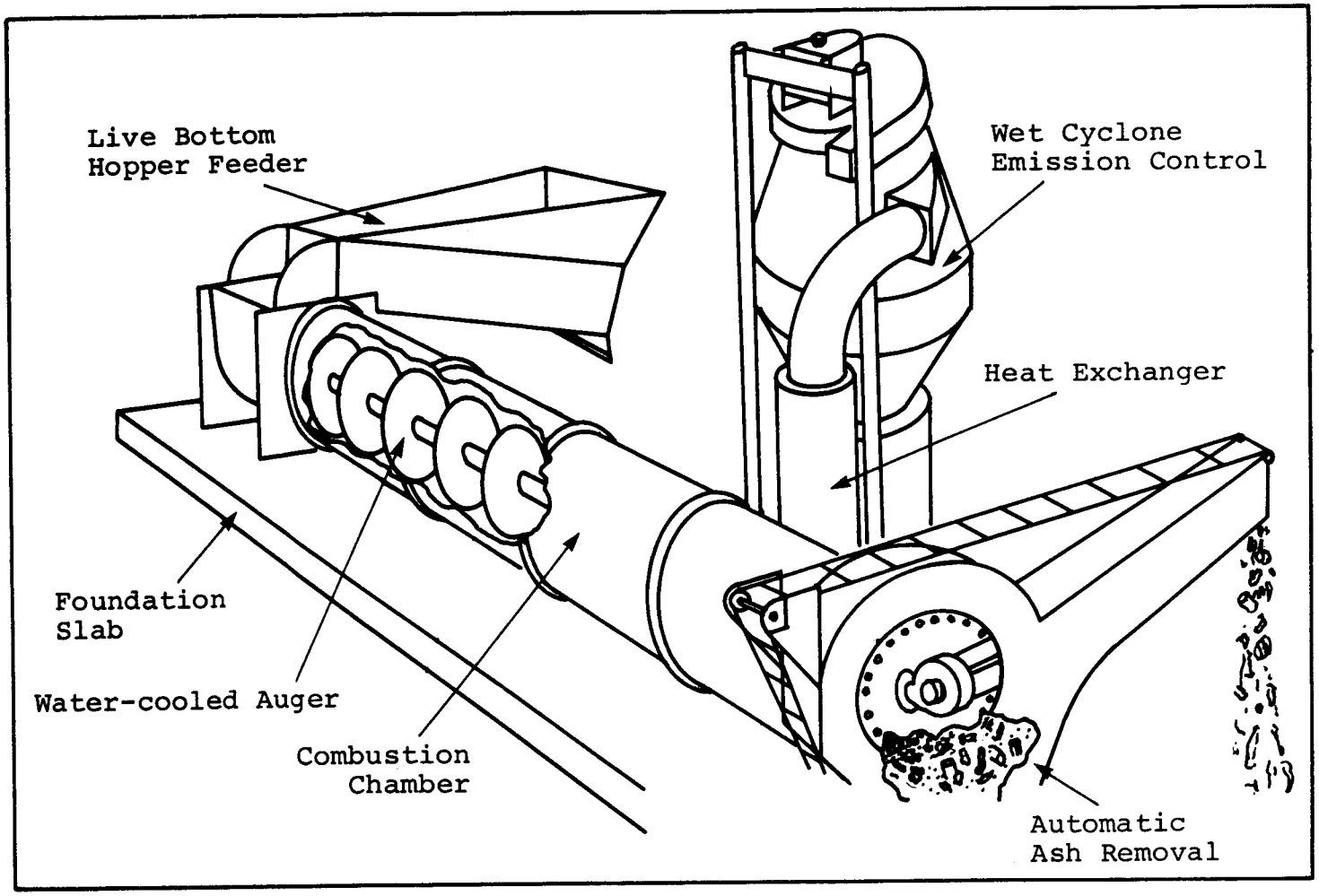

FIGURE 4-10
Auger Combustor

b. Use in Stoker Application. The principal method of using RDF in a stoker application is through the use of d-RDF (densified RDF). In this case, d-RDF is mixed with coal in a proportionate manner determined by the maximum substitution ratio permissible without de-rating the boiler.

c. Burner Conversion. The double-vortex (D-V) burner was originally designed as a combustion chamber for the firing of oil to heat clothes dryers. These small-scale units proved so successful that they have been scaled up for use in industrial-sized boilers, utilizing the appropriate type of RDF.

4.2.2 Disposition of Resource Recovery Residues. Refuse derived fuel and other processes cannot convert the entire solid waste stream into a usable product. A means of disposal for the resulting residue must be provided. The amount of residue, which will generally vary between 10 and 20 percent of the total solid waste stream, depends on the following: characteristics of the solid waste, types of materials recovered, and type of solid waste treatment process used. Since RDF and composting processes primarily utilize the organic components of the solid waste, the residue will primarily consist of inorganic materials, such as glass, metal, grit, ash, concrete block and ceramics. Material reclamation will further reduce the amount of residue to approximately one-tenth of the original volume. The cost of ultimate disposal of the rejected material must be included in the economic comparison of solid waste management alternatives. Residues are relatively inert and easy to handle. Ultimate disposition can be in contractor or installation landfill as land conditions allow.

4.3 INCINERATION. Incineration is a method for waste reduction and stabilization; and as such, it cannot be considered a method of disposal. Incineration is a thermal, waste-reduction process by which solid, liquid and gaseous combustible wastes are converted (oxidized) through controlled combustion to a residue containing little or no combustible material, and to gases which are released to the atmosphere. A significant portion of this stack discharge can be polluting. The non-combustible portion or ash residue is removed for land burial. The potential for air as well as surface and ground water pollution from incinerators has led to restrictions on their operation. The cost of pollution control equipment on small installations is prohibitive in many areas. In addition, incinerators have high capital and operating costs. This paragraph deals mainly with the requirements for operation of existing incinerator facilities at military installations. Plans for new facilities or upgrading existing facilities should be made with respect to the environmental and economic advantages of resource recovery discussed in paragraph 4.1.

4.3.1 Guidelines and Regulations. The following guidelines and regulations apply to incineration:

a. Solid wastes will be incinerated only in facilities specially designed for that purpose and only when there is no other satisfactory alternative.

b. Air pollutants from incinerator operations include particulates, carbon monoxide, sulfur oxides, hydrogen chloride and heavy metals such as mercury, lead and cadmium. In controlling these emissions, military installation incinerators must comply with the most stringent of Federal, state, and local air pollution emission limits. Federal requirements are contained in 40 CFR 60 and Executive Order 11752.

c. Design and operation of incinerator facilities shall be in accordance with the Environmental Protection Agency guidelines for Thermal Processing of Solid Wastes (40 CFR 240).

d. Design and construction of new incinerator facilities will be preceded by an assessment of the environmental impact of that facility in accordance with the National Environmental Policy Act, Council on Environmental Quality Guidelines and agency regulations of each Military Department. For Air Force installations the principles of site selection for incineration plants are contained in AFM 88-11, Chapter 4.

e. Safe incinerator operation shall be a primary concern. A summary of applicable safety measures is outlined in paragraph 4.3.3.2.

f. The collection system and operation of the incinerator shall be planned so that toxic materials, bulky wastes, flammable or explosive wastes or other materials not suitable for incineration are disposed of by other means. Wastes requiring special handling are discussed in Chapter 5. Highly flammable or explosive materials, such as gasoline, oil, tar roofing, photographic film, and ordnance, shall only be incinerated in an incinerator specifically designed for that purpose. Violations of this rule will subject incinerator personnel and equipment to unacceptable risks. Disposal of pesticides and pesticide containers is discussed in paragraph 5.4.2.

4.3.2 Incineration Facilities. Solid wastes are normally delivered to the incinerator in the type vehicles described in Chapter 3. Incinerator facilities must provide for receiving, weighing, unloading, storage, charging, combustion, emission control and removal and handling of residues.

4.3.2.1 Types. There are two major types of incinerators: those used for the combustion of municipal type solid wastes and those used for special purposes.

a. Municipal Incinerators.

(1) Single-Chamber, Cylindrical, Batch-Feed Type. This is a refractory-lined furnace charged through a door in the upper part of the furnace. Refuse is dropped into the furnace periodically and stoked to the periphery by a rotating cone with rabble arms. The dumping grates are located around the periphery.

(2) Single- or Multiple-Cell, Rectangular, Batch-Feed Type. This may be a refractory-lined or waterwall furnace with a charging door in the middle or near the back of the ceiling of each cell. It is equipped with either fixed or moving grates set level or inclined.

(3) Continuous-Feed Type. In this type of incinerator the refuse is fed continuously and the ashes are moved continuously. Also an air seal is maintained continuously within the furnace. The inclined, rotating-kiln type is essentially the same as the continuous-feed types except that it has a refractory-lined, slowly revolving cylindrical kiln that is used in the final burning stage.

b. Special-Use Incinerators.

(1) Pathological Incinerators. These are special units used to oxidize organic materials such as animal or human remains. In many areas, it is now mandatory that hospital wastes be disposed of in a pathological unit. The single distinguishing feature of these units is the drying hearth, which is used to dry the waste to a point where it will sustain combustion. To maintain an adequate combustion temperature, auxiliary burners are located in both the primary and secondary combustion chambers.

(2) Classified-Material Incinerators.

(3) Multiple-Story Family-Housing Incinerators. These are used in apartment buildings and similar structures. On each floor there is a charging door which allows refuse to be fed through a chute to the incinerator. The incinerator itself is usually a single chamber unit without a grate. Periodically, the operator ignites the refuse which burns on a hearth.

4.3.2.2 Incinerator Components. Figure 4-11 illustrates a typical incinerator facility with heat recovery. The facility illustrated is a waterwall salvage fuel boiler operated by the Navy Public Works Center, Norfolk, Virginia. The functional components of a typical incinerator facility include:

a. Scales. An incinerator scale weighs incoming solid waste and outgoing residue. It may also be used to weigh salvaged materials. Weight records can be used to improve operation and are needed for testing air pollution control devices and making material balances for the facility.

b. Unloading Area (Tipping Floor). The unloading area is the flat area adjacent to the storage pit or charging hoppers where the trucks maneuver into position for dumping. The area should be large enough for safe and easy maneuvering and dumping, and so designed to avoid a backup of trucks waiting to unload. The unloading area should be enclosed for dust control, odor confinement, and noise reduction. The area should also be provided with a backing bumper to prevent the trucks from backing into the storage pit.

c. Storage Area. The storage pit provides a safe and convenient holding place for the refuse before it is

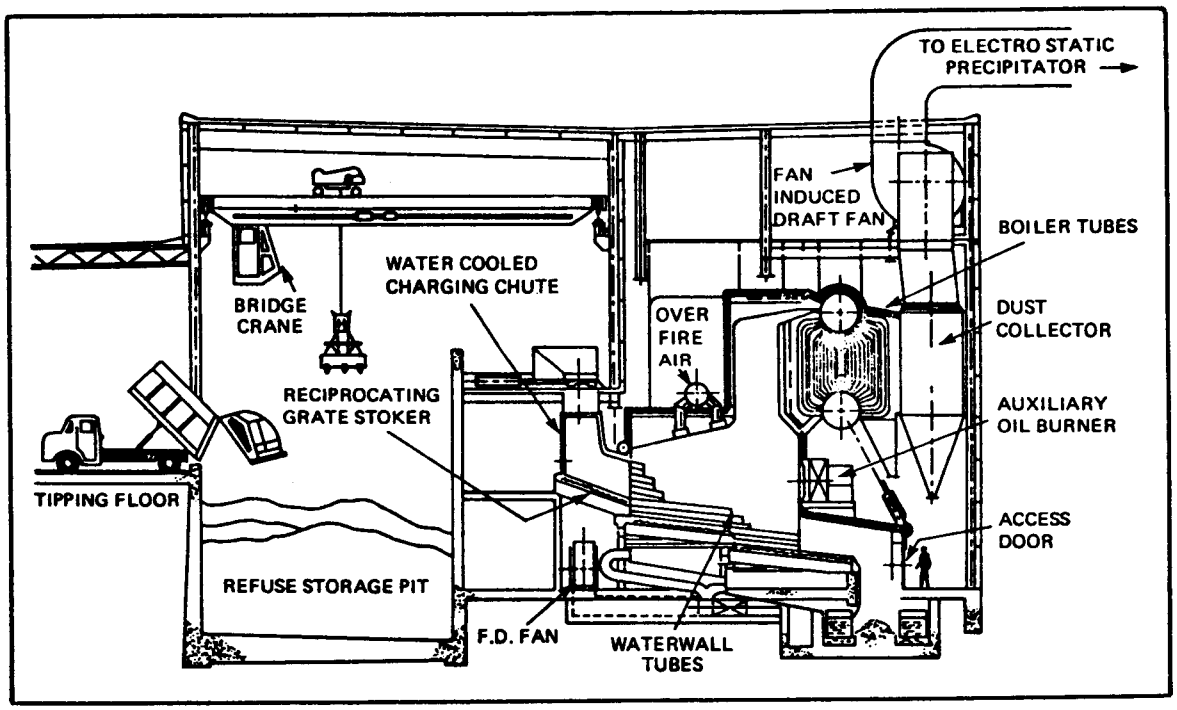

FIGURE 4-11
Typical Incinerator Facility

charged into the incinerator. The storage pit is also used to mix the refuse to provide a more uniform feed for the furnaces. It is usually designed to hold about 1.5 times the 24-hour capacity of the incinerator.

d. Charging Equipment. Solid waste is charged into the incinerator by several methods. In small installations the storage area usually is on the same elevation as the charging hoppers. A vibrating hopper and conveyor, a front-end loader, or other mechanical means are used. At larger incinerators, bridge or monorail cranes are used to charge the solid waste. The cranes are also used to mix the solid waste in the pit, which results in a more uniform burning material. The solid waste is charged into a charging hopper which is connected to the furnace by a charging chute. The charging chute is usually protected from extreme heat by a water jacket. In batch-fed incinerators a gate separates the charging hopper from the furnace.

e. Grates. These devices are used to support the solid waste in the incinerator during drying, ignition and combustion. Openings in the grate permit air to pass through. Typical grates (Figure 4-12) may be either fixed or movable. A movable grate designed to feed solid waste to the incinerator is called a stoker.

f. Combustion Chamber. The major part of the combustion of refuse takes place in the combustion chamber. There are two basic types of combustion chamber wall construction, refractory and water-cooled structural steel. The primary purpose of both types of wall construction is to provide an enclosure in which the controlled combustion of refuse can take place. The structural steel walls (water walls) are used when large amounts of waste heat are to be recovered. The water walls also require less excess air and therefore smaller pollution control equipment.

g. Auxiliary Burners. It is desirable to have auxiliary burners available for:

(1) Furnace warm-up.

(2) Promotion of primary combustion when the solid waste is wet or does not contain an adequate heat (BTU) content for good combustion.

(3) Completion of secondary combustion to insure odor and smoke control.

(4) Supplementing heat recovery units when the supply or heat value of the solid waste is not sufficient.

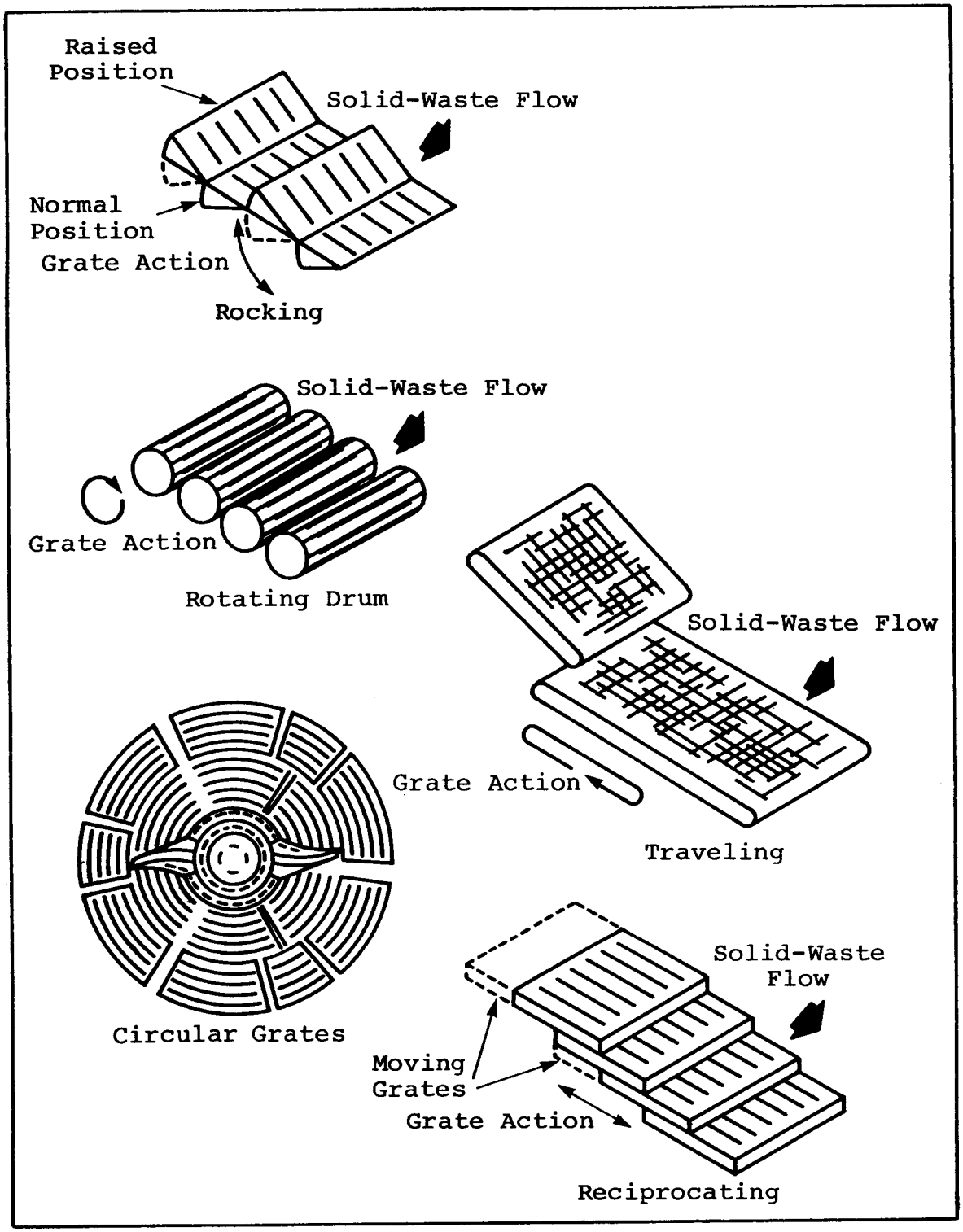

FIGURE 4-12
Typical Incinerator Grates

The auxiliary fuel is usually gas or oil. The burner location depends upon the purpose of the auxiliary fuel.

h. Subsidence Chamber. The subsidence chamber is an expansion chamber in which the gas velocity is usually reduced to less than 3.1 meters (ten feet) per second. This allows large particulate matter, greater than 100 microns (0.004 inch), to settle out.

i. Refractory Materials. Refractory materials are used to line the incinerator walls for heat resistance. Most refractories are composed wholly or in part of alumina, magnesia, and silica; although chromite and zircon are sometimes used. Refractories are commonly precast as bricks, which are laid with mortar. They can also be used in the form of dry powder, which is mixed like cement and cast in forms. Plastic refractories are premixed by the manufacturer and are used as a patching material and in confined areas. The refractory used in the incinerator should be able to resist the excessively high temperatures, the thermal shock, the abrasion from stoking tools and sliding or tumbling solid waste, and the erosion from high velocity gases with entrained particles. Where lower temperatures and less wear occur, a lower quality of refractory may be used.

j. Spark Screens. Spark screens should be provided on all stacks. This device is used to prevent sparks, embers, or other ignited material above a given size from leaving the stack.

k. Instrumentation and Controls. Instrumentation and controls are used to monitor and regulate the incineration process in order to protect the environment, the equipment, and the operating personnel; and to record data such as temperatures, pressures, incoming refuse weight, and air and water flow.

l. Air Pollution Control Devices. These devices can remove a large percentage of the particulate emissions from incinerator flue gas. Included are wetted baffles, cyclones, wet scrubbers, electrostatic precipitators and fabric filter collectors (bag houses). Gaseous emissions, such as sulfur oxides and hydrogen chloride, and aerosols from heavy metals are best controlled by eliminating the heavy metals (paragraph 4.3.1b.) from the incinerator feed.

4.3.3 Incinerator Operation. In addition to the management requirements detailed in other paragraphs, the critical part of incinerator operation is maintenance of the combustion process. Air (oxygen) is needed in this process to complete the combustion reaction and also to control the temperature

in the incinerator. Excess air is added to the incinerator to insure complete combustion and to regulate the incinerator temperature. Many incinerators are designed to operate at 982°C (1800°F). The incinerator must operate at or above 816°C (1500°F) to eliminate odors, but below 1093°C (2000°F) to protect the refractory. The more excess air that is introduced, the lower the operating temperature of the incinerator. Air may be introduced into the incinerator either all in the primary combustion chamber or it may be added in the downpass between the primary and secondary combustion chambers or in the secondary chamber. Air added in the primary combustion chamber is either added above (over-fire) or below (under-fire) the grate. Under-fire air is normally 40 to 60 percent of the total air. Air may be added to the incinerator by natural draft through the chimney or stack, forced draft (blowing air through the incinerator), or induced draft (pulling air through the incinerator).

4.3.3.1 Incinerator Control. There is very little that requires attention during incinerator operation. The factors that the operator can control include:

a. Burning Rate. The burning rate is dependent upon the rate of waste feed and the uniformity in the type of waste material entering the incinerator. Overfeeding may cause "torching" (flames in the secondary chamber and up the stack) if the waste is highly combustible, or smoking if the waste is packed or wet.

b. Draft. The draft is the control of the amount of air entering the incinerator. The amount of excess air is used to control the incinerator temperature. A common refuse (65 percent combustible, 25 percent moisture, 10 percent noncombustible) will burn at 982°C (1800°F) when supplied with 100 percent excess air. Refuse with higher moisture contents requires less excess air.

c. Auxiliary Burner. The auxiliary burner is used to control the temperature when the moisture content of the waste is too high. The auxiliary burner is also used to heat the incinerator at startup.

d. Air Pollution Control Equipment. The air pollution control equipment often requires special operator training. Its control depends on the type of pollution control equipment used and the type of waste being incinerated.

4.3.3.2 Safety. Measures to ensure safe incineration must be included as facility design features and in procedures for operation and maintenance. Air Force personnel refer to AFM 127-101, Industrial Safety Accident Prevention Handbook.

a. Facility safety features include:

(1) Automatic or manual sprinkler systems for storage pits and charging floors.

(2) Fire-hose stations and fire extinguishers at strategic locations for fire protection. Air Force personnel refer to AFM 92-1.

(3) Good lighting.

(4) Separate lunch rooms, locker rooms, and showers for better sanitary conditions for personnel.

(5) Adequate drains and sloping floors.

(6) Building ventilation using outdoor suction intakes to prevent the possibility of creating a vacuum on the stoking floors.

(7) Stacks equipped with aircraft warning, lightning rods, and safety ladders.

(8) Intercom system between charging and stoking floors.

(9) Access ladders to storage pits.

(10) Forced air ventilation in storage pits.

(11) Drains to allow hosing of the storage pits.

(12) A method of quickly removing an injured person from the storage pit.

(13) Chimney screens.

(14) Guardrails to prevent personnel from falling into the incinerator equipment. At charging opening of top-fed incinerators, floor boards as well as guardrails will be provided. OSHA Standard 1910.133 refers to guarding openings in floors.

(15) Permanent, fixed backing bumpers to prevent vehicles from backing into the storage pit.

(16) Overhead cranes equipped with an alarm to indicate that the crane is in motion.

(17) Safety valves in any facility designed to generate steam or hot water.

b. Operation and maintenance procedures should assure that:

(1) Personnel are provided with face shields or safety goggles, heavy gloves, respirators, safety shoes, and hard hats. OSHA Standard 1910.133 is a useful reference source on eye and face protection. Air Force personnel refer to AFM 127-161, paragraph 5-13, for approved shields.

(2) Safety belts are worn when personnel are working on ladders.

(3) Fly ash is removed from the flues only when the ash temperature is below 38°C (100°F).

(4) Procedures for operation during emergency situations, such as power failure, air or water supply failure, equipment breakdowns, and fires, are developed and posted. These procedures should be practiced so that personnel become familiar with them and able to apply them when necessary.

(5) Safety valves are removed and checked at least once a year by qualified mechanics. Air Force personnel refer to AFM 85-12.

(6) Electrical equipment, such as forced-draft motors, switches, and wiring, is serviced and maintained by qualified electricians. Air Force personnel refer to AFM 85-17.

(7) Good housekeeping is practiced at all times.

(8) Appropriate warning signs and instrumentation are conspicuously posted. Charts and signs serve to familiarize personnel with correct operating practices. An incinerator operating chart can be used as a visual guide for stokers and chargers. Warning signs should be posted as reminders to keep personnel outside guardrails. Prominent posting of the notices to collection crews will alert truck drivers and helpers to safe, orderly procedures. For timely maintenance, a schedule should be displayed, giving desirable frequency for inspecting refractories and cleaning ash pits, fire chambers, combustion chamber, stack base, floors, sumps, and floor drains.

4.3.3.3 Personnel Requirements and Labor Schedules. Safe, efficient operation of an incinerator requires experienced or trained personnel. Necessary common work, such as housekeeping, may be done by any available personnel. The chief

operator must supervise unloading and handling of refuse at the unloading area in addition to his incinerator duties. Maximum incinerator efficiency is obtained with continuous operation. However, military installations usually do not generate enough waste to justify this schedule. Except at the largest installations, one man, working an eight-hour shift, can operate an incinerator that has sufficient capacity to burn all installation refuse during the working day. Clean-up is mandatory before and after firing. If the workload is too heavy, additional operators can be assigned. A staggered schedule will provide an adequate crew early and late in the day and a full crew during peak delivery hours. The following typical staggered schedule allows two hours for morning and evening cleaning and nine and one-half hours for incineration at full burning capacity.

a. 0700 - 1530: The first man cleans the furnace and builds a fire from 0700 to 0800, then supervises the unloading and charging of refuse.

b. 0900 - 1730: The second man stokes the fire and controls the rate of charging. From 1630 to 1730 he accomplishes incinerator shutdown and ensures that the facility is left in a safe configuration.

4.3.3.4 Maintenance. Components subject to rapid wear or damage should be inspected weekly at a time when they are not in operation. After each weekly inspection a report should be made. It should include the condition of the furnace, repairs performed, and the expectation of future repairs. When repairs are being made, the units remaining in operation should not be overloaded. Some incinerators are equipped with maintenance shops. Spare parts (those not readily available as shelf items) for cranes, stokers, fans, and motors are sometimes kept on hand. Most operational maintenance is performed by regular staff employees. Preventive maintenance should be practiced to prevent serious problems. Weekend shutdowns provide an excellent opportunity to inspect for future problem areas. Refractory maintenance, boiler care, slag removal, and grate maintenance are some of the important areas that should be serviced frequently. In addition to the control of odor, dust, and litter, the work space should be kept clean. Misuse of employee facilities, such as accumulating salvage items, should not be permitted. Poor housekeeping creates fire or safety hazards. Lighting fixtures and bulbs should be kept clean to provide effective illumination at all times.

4.3.3.5 Post-Incineration Resource Recovery. Salvage of metal after incineration, "back-end recovery," has been practiced successfully at some incinerators. The major advantage

of this method over salvage before incineration is that the volume of material to be processed has been reduced considerably. Other advantages are that the burning process removes much of the undesirable combustible material from the salvage; the incineration process is not dependent on the salvage process; and the failure of the salvage equipment or salvage market will not directly affect the incineration operation. A salvage operation can reduce the residue volume and may provide an economic return. The success of the salvage operation depends on its size, design and operation; the type of incineration; and the market for the salvaged materials. A serious disadvantage of back-end recovery is that some of the non-combustible material may be volatilized (such as the tin plate on steel cans) during combustion and be emitted as air pollutants. The recoverable materials may also be chemically changed or contaminated during processing in the incinerator. These changes may reduce the economic value of the materials subsequently recovered.

4.3.3.6 Disposal of Residue. From 5 to 25 percent by weight of the refuse charged into an incinerator remains as residue after combustion. The percentage for a given facility depends upon the composition of the waste stream, preincineration resource recovery, and operation of the incinerator itself. Devices to handle this residue differ, depending on the type and design of the incinerator. The residue contains all of the solid materials remaining after burning such as ash, clinkers, unremoved metals, glass, rocks, and unburned organic substances. Incinerator residue is permeable and may contain water soluble inorganic and organic compounds. Pollution will result if these compounds reach ground or surface waters. Batch-feed incinerators usually have ash hoppers located directly below the grates. The hoppers are usually large enough to store the refuse from several hours' burning. The residue is usually quenched or sprayed with water to reduce fire hazards and to control dust. Many incinerators are designed to allow dump trucks to load the residue directly from the hoppers. The residue from continuous-feed furnaces falls from the burning grate into ash removal devices that are usually automated. The residue is usually quenched in a bath for dust and fire control. A drag or apron pan conveyor then carries the wet residue to dump trucks. Water is usually used to quench the incinerator residue. This quenching cools the residue and helps eliminate fire hazards. It also helps to control dust entrainment in the air. The quench water requirements will vary considerably depending on the specific design and operational requirements of a given incinerator. Ash after quenching is then hauled to the landfill.

4.4 SANITARY LANDFILLING. Sanitary landfilling is a method of disposing of refuse on land without creating nuisance or hazard to public health or safety, by utilizing the principle of engineering to confine the refuse to the smallest practical area, to reduce it to the smallest practical volume, and to cover it with a layer of earth at the conclusion of each day's operation or at more frequent intervals as may be necessary. Sanitary landfilling has advantages that are not present in other methods of disposal. These advantages include:

a. Once preliminary surveys and the site construction plans have been finalized and approved, the sanitary landfill can be put into operation in less time and at a lower cost than other disposal methods.

b. It does not usually require a large operating crew or specialized equipment.

c. It can be used to dispose of combined waste, thus eliminating sorting and separate collection of material.

d. Sanitary landfills may be located close to sources of waste without creating a nuisance or health hazard.

e. Operation of the fill is not affected by variations in the amount of waste collected.

Despite these advantages, the sanitary landfill method is not suited to all installations and wastes. Landfilling cannot be used for disposal of infectious hospital wastes, concentrated toxic wastes, radioactive materials or waste oils. However, special areas of a sanitary landfill may be designed, approved, and designated for the specialized management and disposal of certain hazardous wastes. (See paragraph 5.2.4.) Installations having unfavorable soil or ground water conditions shall use some other alternative method of solid waste disposal.

4.4.1 Guidelines and Regulations. Solid wastes will be disposed of in accordance with procedures described in Guidelines for the Land Disposal of Solid Wastes (40 CFR 241). Further assistance in landfill management may be found in Sanitary Landfill Design and Operation (U.S. EPA Report SW-65TS), and Sanitary Landfill Facts (PHS publication No. 1792) (see the Bibliography). In general, the guidelines cover the following:

a. Site Selection. Site selection and utilization shall comply with appropriate Federal, state, or local health, environmental, planning, and solid waste management agency requirements and plans as applicable. Several states prohibit

the operation of a sanitary landfill within 1.6 kilometers (one mile) of an airfield with propeller aircraft operations and within 3.2 kilometers (two miles) of airfields with jet aircraft operations. Site selection must also consider potential bird problems, particularly with respect to airfield operations.

b. Design. Plans for the design, construction, and operation of the site shall be prepared or approved by a professional engineer.

c. Water Quality. The location, design, construction, and operation of the landfill site shall minimize environmental hazards and shall conform to the most stringent of applicable ground and surface water quality standards and requirements. Applicable standards include existing Federal, state, and local standards that are legally enforceable.

d. Gas Control. Decomposition gases generated within the landfill site shall be controlled on site, as necessary, to avoid a potential hazard.

e. Vectors. Conditions shall be maintained that are unfavorable for the harboring, feeding, and breeding of vectors (organisms, such as flies, rodents and insects, that transmit causative agents of diseases).

f. Aesthetics. The landfill site shall be designed and operated at all times in an aesthetically acceptable manner.

g. Cover Material. Cover material shall be applied as necessary to minimize fire hazards, infiltration of precipitation, odors, and blowing litter; control gas venting and vectors; discourage scavenging; and provide a pleasing appearance.

h. Compaction. To conserve landfill site capacity and preserve land resources which minimize moisture infiltration and settlement, solid wastes and cover material shall be compacted to the smallest practicable volume.

i. Safety. The land disposal site shall be designed, constructed, and operated in such a manner as to protect the health and safety of personnel associated with the operation. Pertinent provisions of the Occupational Safety and Health Act of 1970 (Public Law 91-596) and subsequent regulations shall be adhered to. Specific safety procedures include the following:

(1) Check equipment before starting

(2) Use steps and handholds.

(3) Keep steps clean.

(4) Inspect area before moving.

(5) Operate from driver's seat.

(6) Wear seat belts.

(7) Never mount moving equipment.

(8) Authorized passengers only.

(9) Keep bucket or blade low.

(10) Check blind areas.

(11) Keep enough clearance.

(12) Avoid side hill travel.

(13) Avoid excessive speed.

(14) Don't crush sealed containers.

(15) Go carefully over bulky items.

(16) Check work area.

(17) Park on level ground.

(18) Lower attachments to ground when parked.

(19) Never jump from equipment.

(20) Avoid leaving equipment unattended.

(21) Always have adequate lighting.

(22) Clean equipment before repairing.

(23) Remain in seat during equipment adjustments.

j. Records. The installation engineer shall maintain records and monitoring data as required.

k. Clearing and Grubbing. It may be necessary to remove trees and brush to provide for operation of collection

vehicles and equipment. Where possible, natural windbreaks and green belts (undisturbed grassy areas) should be preserved for erosion control and aesthetics.

l. Buildings. Permanent or temporary facilities should be provided, even at the smallest landfill operation. The buildings will provide storage for small equipment, records, scale operations, and also provide protection for personnel from the weather.

4.4.2 Planning New Sanitary Landfills. Plans for a new site should include:

a. Layout of the sanitary landfill area.

b. Major access routes.

c. Existing contours and planned final contours.

d. Anticipated service life of the landfill and areas filled to date.

e. Location of unusual vegetation, soil conditions, or ground water which will affect landfill operations.

f. Site improvements.

g. Landfill methods.

h. Provisions for control of waste and decomposition gas.

i. Planned future use of the completed landfill site. Selection of a site location is perhaps the biggest problem in developing a sanitary landfill. Consideration should be given to the following variables:

(1) Accessibility of transportation.

(2) Haul distance.

(3) Available cover material.

(4) Geology.

(5) Hydrology, both surface and ground water.

(6) Climatology.

The amount of space required for a sanitary landfill depends on the amount of generated waste anticipated and the length

of time the area will be used for landfilling. Topographic surveys of the landfill should be made regularly to determine the rate of space utilization. The incoming-material data and the topographic surveys can be used to determine the amount of compaction and efficiency, and to estimate the degree of decomposition and eventual settlement.

4.4.3 Operation. This paragraph focuses on the procedures, methods, equipment, personnel and other factors pertinent to sanitary landfill operations. An operations guide should be made available to all personnel. Any guide should clearly outline routine procedures and anticipated abnormal situations, such as:

a. Hours of operations.

b. Measuring procedures.

c. Traffic flow and unloading procedures.

d. Designated areas for specific disposal.

e. Placement of cover material.

f. Maintenance.

g. Adverse weather operations.

h. Fire control.

i. Litter control.

j. Salvaging operations, where permitted. (Salvaging operations should be avoided at the sanitary landfill site wherever possible.)

4.4.3.1 Methods of Landfilling. Prevailing methods of sanitary landfill construction include:

a. Trench Method. This method, also known as the trench-fill or cut-and-cover method, is usually employed where the only land available for solid waste disposal is flat or gently sloping (Figure 4-13). The method, which is based on the use of parallel excavated trenches, is particularly suited to terrain that can be trenched with conventional earthmoving equipment. Starting at one edge of the land parcel, solid waste is dumped into the first trench from its nearest side. At the end of each day's dumping and spreading, the waste is covered with earth excavated from the second trench on the far side of the dumping edge. The completed top is given a heavy earth cover while the working face is

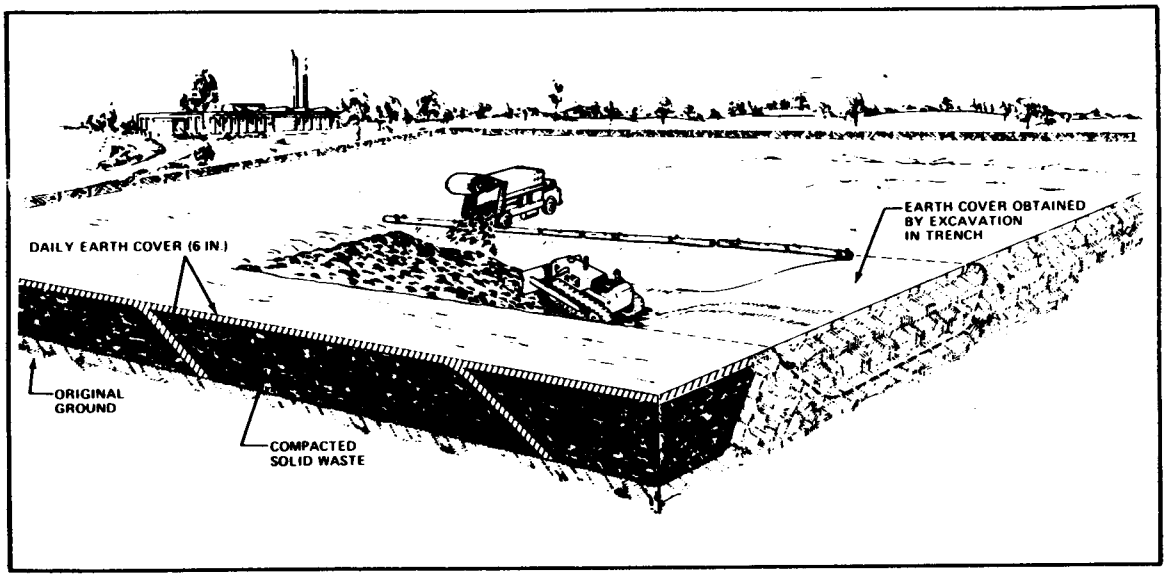

FIGURE 4-13
Trench Method

given a light closing cover. When completed, the landfill consists of a series of long, narrow refuse cells in parallel rows. Table 4-1 provides guidance on trench dimensions as a function of installation population. The finished grade will usually be higher in elevation than the original ground surface.

b. Area Method. This method, also known as the area-fill or fill-and-cover method, is usually employed in low-lying areas such as tidelands, marshes, or swamps. For tideland applications, the site is usually enclosed with a dike. Waste is dumped on the existing ground surface, spread in horizontal layers and compacted (Figure 4-14). At the end of each day's work the surface is covered as needed with 15 centimeter (six inches) of compacted earth excavated from the area directly in front of the working face of the landfill (progressive excavation). If excavation is not possible, the fill is covered with locally imported cover material.

c. Ramp Method. The ramp method, also known as the progressive-slope method, is used exclusively in filling natural or man-made depressions, such as deep ravines, canyons, or quarries. In this method, the waste is deposited and spread in layers to a predetermined height on an angle against the side of the ravine, canyon or quarry (Figure 4-15). The height can reach 12.2 to 15.2 meters (40 to 50 feet) or more. Cover soil is placed on the slope sides and top at regular intervals. In this operation, the collection vehicles deposit their waste at the base of the working face of the fill; cover is obtained from a point just ahead of the face.

TABLE 4-1
Recommended Trench and Refuse Chart

Size of Installation (Population Equivalent)	Depth of Starting Trench*	Depth of Compacted Refuse
1,000 to 2,000	0.76 m (2-1/2 ft)	0.91 m (3 ft)
2,000 to 4,000	0.91 m (3 ft)	1.07 m (3-1/2 ft)
4,000 to 6,000	1.07 m (3-1/2 ft)	1.22 m (4 ft)
6,000 to 8,000	1.22 m (4 ft)	1.52 m (5 ft)
8,000 to 10,000	1.22 m (4 ft)	1.83 m (6 ft)

*Subsequent trench depth will not exceed 0.91 meter (3 feet) as depth is a function of need for enough dirt to cover prior compacted material with a 0.6-meter (2-foot) cover.

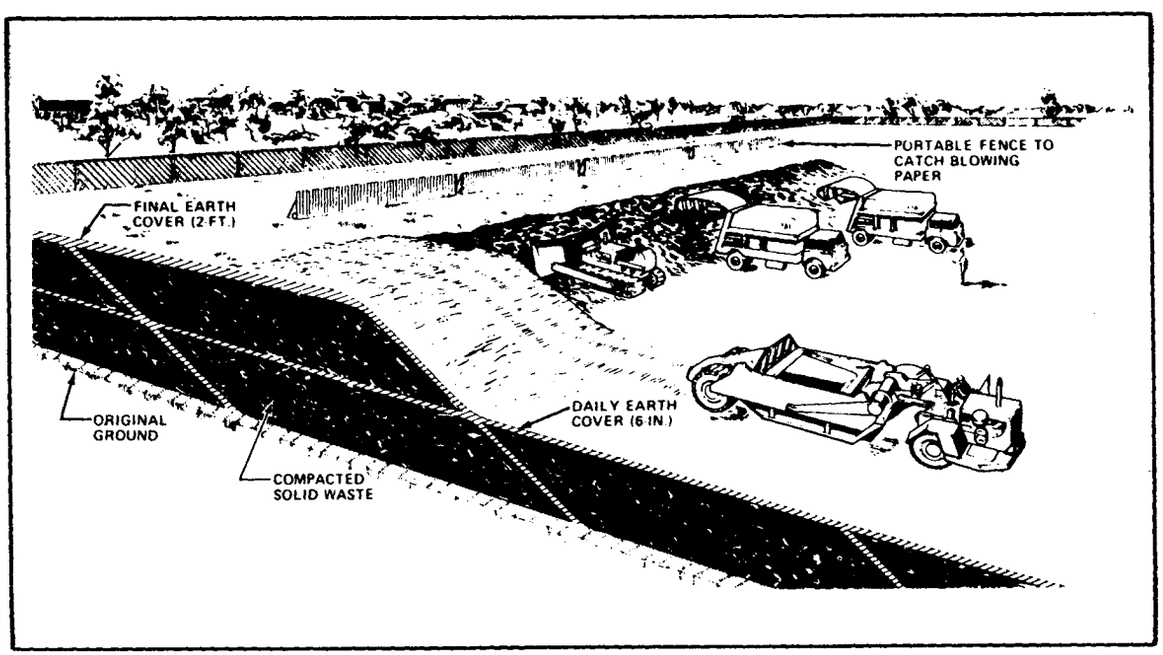

FIGURE 4-14
Area Method

The final surface of the completed landfill should be designed to prevent ponding of precipitation. Settlement must, therefore, be considered. Grading of the final surface should induce drainage but not so extreme that the cover material is eroded. Side slopes of the completed surface should be three to one or flatter to minimize maintenance.

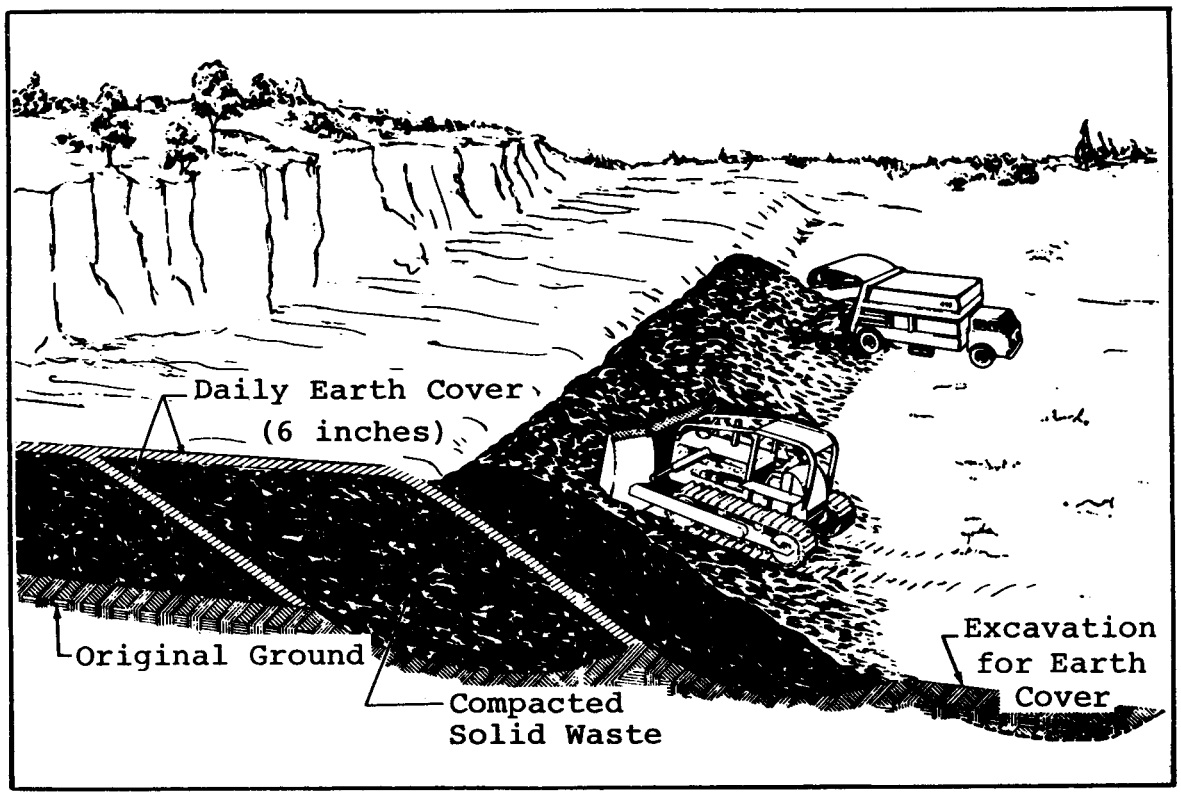

FIGURE 4-15
Ramp Method

4.4.3.2 Equipment. A wide variety of equipment is available from which to select the proper type and size needed for an efficient operation. (Refer to Sanitary Landfill Design and Operation, Environmental Protection Agency, 1972.) The size, type, and amount of equipment required at a sanitary landfill depends largely on the size and method of operation and, to some degree, on the experience and preference of the operators (Tables 4-2 and 4-3). The most common equipment used on sanitary landfills is the crawler tractor which can be used with a dozer blade, trash blade or front-end loader. A tractor is versatile and can normally perform all required operations: spreading, compacting, covering, trenching and hauling the cover material. However, a steel-wheeled landfill compactor is recommended as having several advantages over a crawler tractor wherever volumes warrant a machine almost full time on compaction. Tests have been made which prove that a 17,690-kilogram (39,000-pound), steel-wheeled landfill compactor is as productive and more economical than a 31,298-kilogram (69,000-pound) crawler tractor. Two cells located side by side were prepared in a landfill. Shredded refuse was spread 0.3-meter (one-foot) deep over each cell. The compactor and tractor each operated on its own cell. The density

TABLE 4-2
Average Equipment Requirements

Daily Tonnage	Equipment			
	No.	Type	Size	Accessory*
0 to 41.7 metric tons (0 to 46 tons)	1	Crawler or rubber-tired tractor	4536 to 13,608 kgs (10,000 to 30,000 lbs)	Dozer blade Landfill blade Front-end loader (0.9- to 1.8-m) (1- to 2-yd)
41.7 to 140.6 metric tons (46 to 155 tons)	1	Crawler or rubber-tired tractor	13,608 to 27,216 kgs (30,000 to 60,000 lbs)	Dozer blade Landfill blade Front-end loader (1.8- to 3.7-m) (2- to 4-yd) Multipurpose bucket
	*	Steel-wheeled compactor Scraper Dragline Water truck		
140.6 to 281.2 metric tons (155 to 310 tons)	1 to 2	Crawler or rubber-tired tractor	13,608 kgs (30,000 lbs) or more	Dozer blade Front-end loader (1.8- to 4.6-m) (2- to 5-yd) Multipurpose bucket
	*	Steel-wheeled compactor Scraper Dragline Water truck		
281.2 metric tons (310 tons) or more	2 or more	Steel-wheeled compactor	17,690 kgs (39,000 lbs) or more	Dozer blade Landfill blade Front-end loader
	*	Scraper Dragline Road grader Water truck		

*Specialized equipment that can improve operating efficiency.

TABLE 4-3
Equipment Selection Guidance for Multiple Unit Sites

Equipment Function	Equipment									
	Loader	Dozer	Compactor	Scraper	Track	Rubber	Dragline	Backhoe	Truck	Motor Grader
Spread Refuse	A	A	A		O	O	O	O	O	O
Compact Refuse	A	A	A		O	O	O	O	O	O
Excavate Cover	A	A	O		A*	A*	A	A	O	O
Haul Cover 91 m (300 ft) or less	A	A	B		A	O	C	C	C	O
91 m - 305 m (300 ft-1000 ft)	C	O	O		A	B	C	C	C	O
More than 305 m (1000 ft)	C	O	O		O	A	C	C	C	O
Spread Cover	A	A	A		B	B	O	O	O	B
Compact Cover	A	A	A		O	O	O	O	O	O
Shape Cover	B	B	B		B	B	O	O	O	A

A = Excellent choice.
B = Secondary choice.
C = "In-Combination Only" choice.
O = Not applicable or poor choice.
* = Scrapers may require loading assistance in tough soils and adverse weather conditions.

Courtesy of Eldredge, R.W., "Selection of Sanitary Landfill Equipment," Waste Age, January/February, 1974.

of the refuse was almost identical for both machines. The compactor was faster in compaction and was more stable in backing up slopes. The operating cost of the compactor was only two-thirds that of the tractor. If a machine is required nearly full time for compaction, it is economically advisable to purchase a landfill compactor. Other types of equipment commonly used at large sanitary landfills, where specialized equipment increases overall efficiency, are scrapers, draglines, graders, rubber-tired loaders and water trucks (Figures 4-16 and 4-17). The major functions that these types of equipment are designed to perform are:

a. Waste Handling. This function includes the moving, spreading, and compaction of the waste.

b. Cover Material Handling. Cover material handling includes the excavation, transportation, distribution, and compaction of the cover material.

c. Support Functions. Support functions include the construction and maintenance of the access roads, the control of dust and protection against fires.

Sanitary landfills which handle about 136 metric tons (150 tons), or less, of solid wastes per day can normally operate efficiently with one piece of equipment; but provisions must be made for standby equipment. Large landfills which handle more than 272 metric tons (300 tons) of solid wastes per day will require more than one piece of equipment. At these sites, specialized equipment can be utilized to increase efficiency and minimize costs.

4.4.3.3 Typical Cell Construction. The cells are constructed on a daily basis. A cell usually contains part, or all, of the waste collected during the day. At the end of the day the cell is completed by compacting at least 15 centimeter (six inches) of cover material over the wastes. Cell depth is the thickness of the solid wastes layer measured perpendicular to the working slope where the equipment travels (Figure 4-18). The depth of cells is determined largely by the size of the operation, the desired elevation of the completed fill, the depth of the trench or depression to be filled and, in some cases, the amount of cover material available. The generally recommended maximum single cell depth is 2.44 meters (eight feet). Deeper cells usually result in excessive fill settlement and surface cracking. Solid waste should be spread in layers not greater than 0.6 meter (two feet) thick prior to compaction on a slope not greater than 3/1. In addition, prevent excessive and uneven settlement while spreading and compacting. The compacted solid wastes must be covered at the conclusion of each day (or more frequently if necessary) with

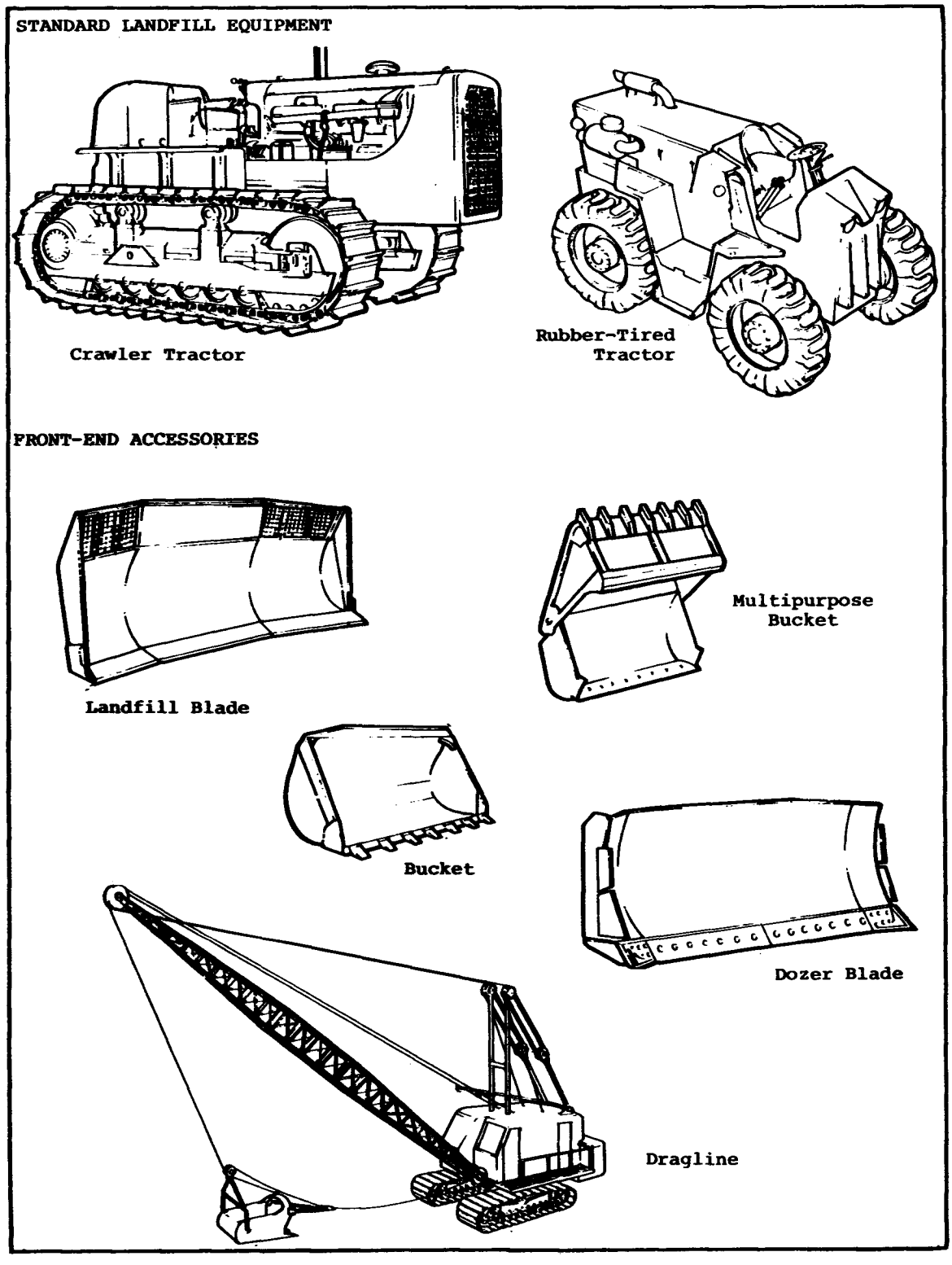

FIGURE 4-16
Landfill Equipment

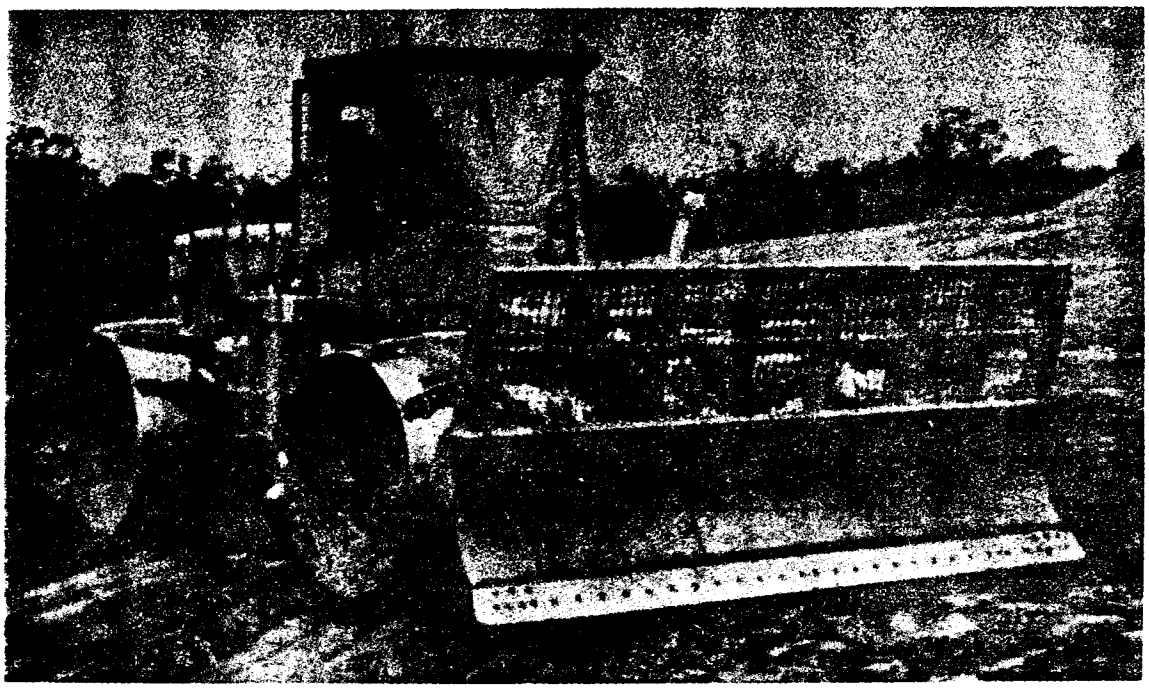

FIGURE 4-17
Steel-Wheeled Compactor

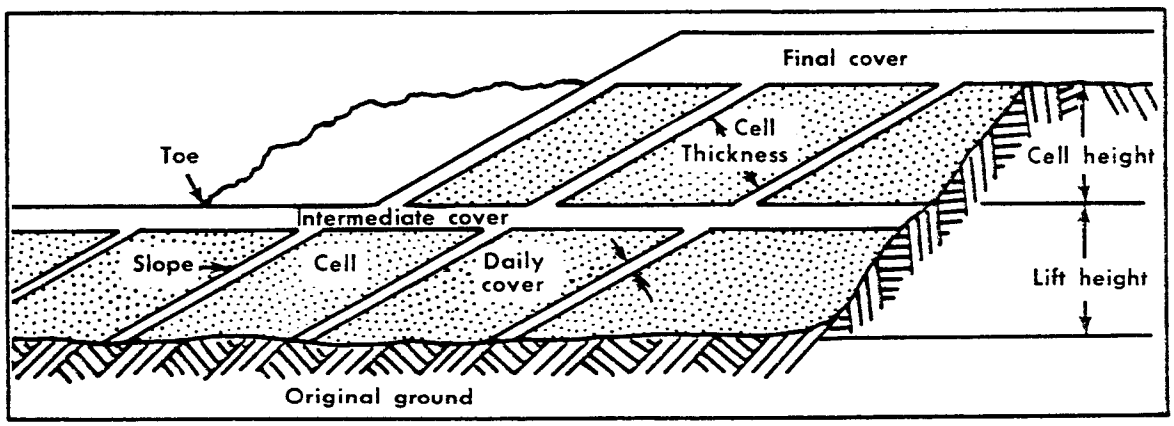

FIGURE 4-18
Cell Depth

a minimum of 15 centimeter (six inches) of compacted earth (Figure 4-19). If a well graded soil is not available on site, it will be necessary to either modify the covering procedures for the type of available material, or haul in a suitable cover material. The cover is necessary to prevent insect and rodent (vector) infestation, blowing paper, fires, the attraction of wildlife other than vectors, and the release of odors. The cover must not prevent the escape of

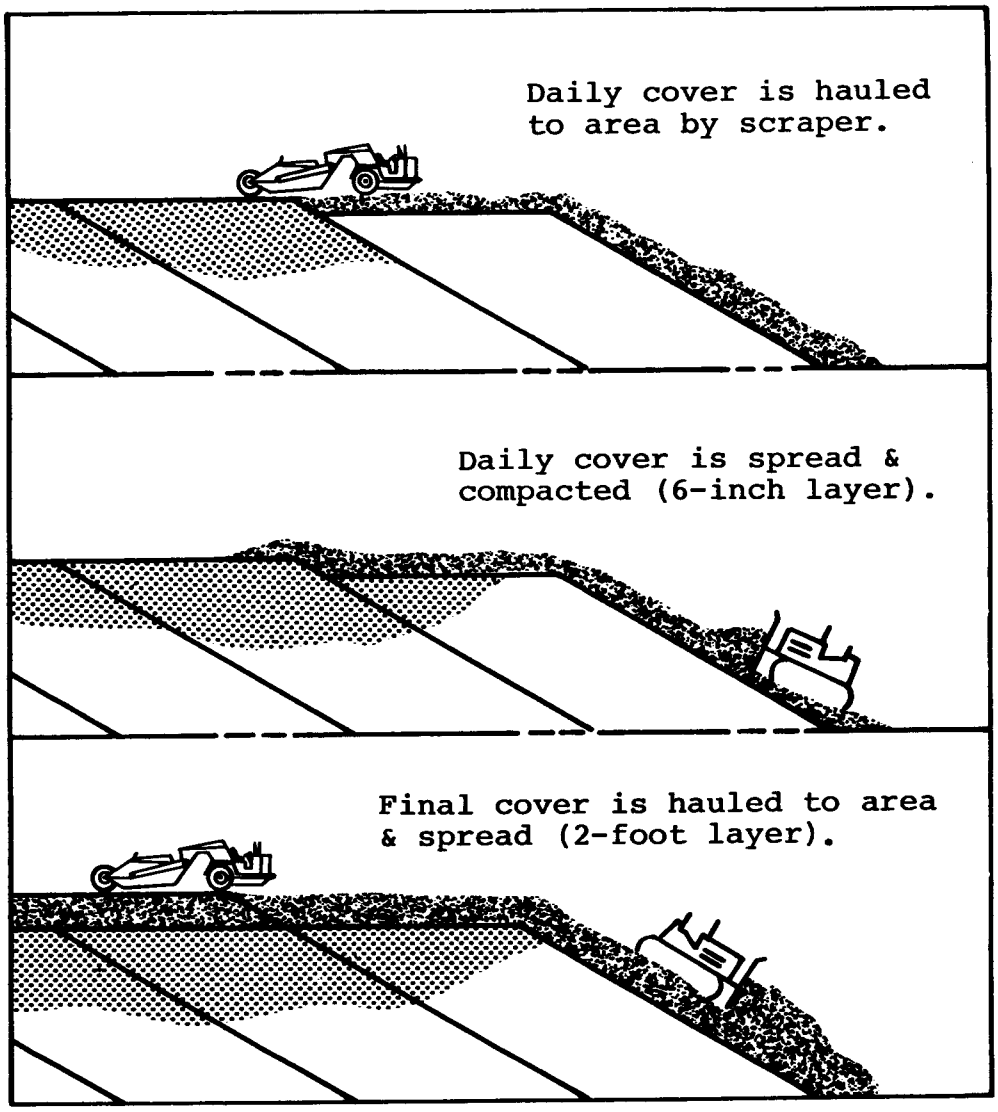

FIGURE 4-19
Covering Solid Waste

gas, especially methane. A minimum of 15 centimeter (six inches) of compacted soil is recommended for daily cover. For intermediate cover on lifts which will not have additional cells placed on them within a year, a minimum of 30 centimeter (12 inches) of compacted soil is recommended. A minimum of 60 centimeters (two feet) of compacted soil is recommended for the final cover. The final cover should be placed over the fill as soon as possible to insure that wind and water erosion do not expose the wastes. Where trees will be planted on the completed fill, a depth of 0.9 meter (three feet) or more of compacted earth is necessary. Routine maintenance of the cover will be required to maintain a clean,

orderly and acceptable site and operation. It is important that all landfill operations include cutting grass and weeds, picking up scattered paper, maintaining good access roads, controlling dust and maintaining neat and clean facilities.

4.4.3.4 Waste Receiving, Unloading, and Traffic Control. The specifics of operating a sanitary landfill depend on site characteristics, equipment capabilities, and local conditions. In a properly operated landfill the following procedures take place:

a. Receiving Waste. The quantities of waste received should be accurately recorded. Weighing is not a routine requirement and is performed only to support a periodic density check.

b. Unloading Waste. The method of unloading waste depends on the type of landfill operation and the climatic conditions. In the area-type of landfill, the waste is usually dumped at the bottom of the working face. It may be necessary to dump from the top if the roads are muddy or impassable. In the trench-type landfill operations, the waste is usually discharged at the top of the working surface.

c. Traffic Flow. Access roads should be constructed so traffic is not interrupted by inclement weather, spring thaws or rainy seasons. In general, roads should be compacted, topped with tractive material, and graded for proper drainage. For loaded vehicular traffic, uphill grades should be seven percent, or less, and downhill grades should be ten percent or less. The roads should be at least 6.7 meters (22 feet) wide and have a minimum curve radius of 22.9 meters (75 feet) if it is anticipated that large transfer vehicles will be used.

4.4.3.5 Spreading and Compacting of Waste. The waste should be spread out and compacted as received (Figure 4-20). The compaction is necessary to lengthen the life of the landfill and to reduce the effective settling of the finished landfill. Large bulky items, such as car bodies, refrigerators, water heaters and tree stumps, can be handled routinely with other solid wastes at large sanitary landfills that use heavy equipment. At small sanitary landfills, where light equipment is normally used, special provisions may be necessary to handle bulky items. A separate unloading area, or an alternate site operated in a sanitary manner, should be utilized for the disposal of bulky items that cannot be handled routinely with other solid wastes. The size of the working face of the sanitary landfill operation is determined by the rate of unloading of incoming vehicles. The working face should be as narrow as possible to minimize the exposed area, but not so

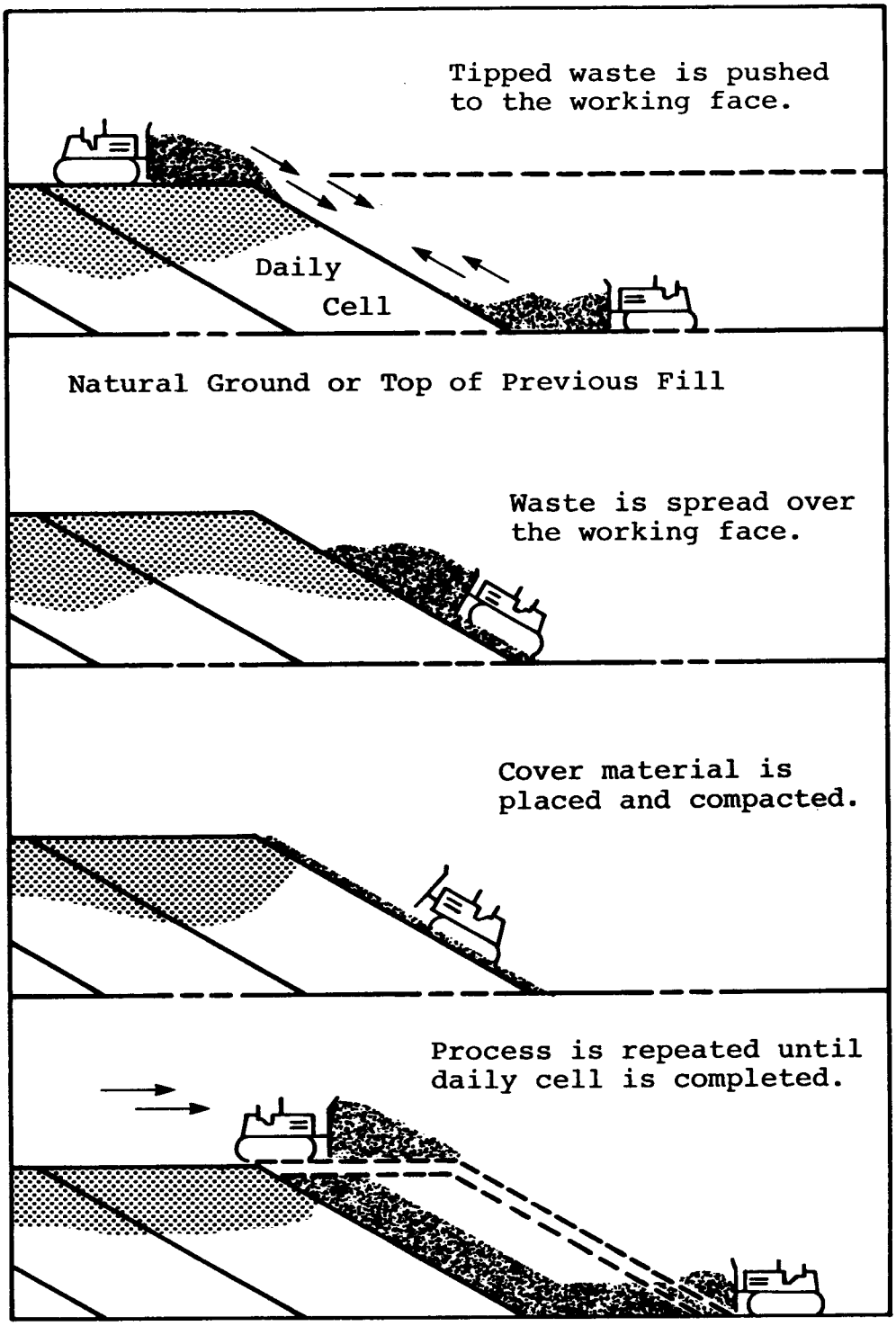

FIGURE 4-20
Spreading and Compacting Solid Waste

small as to interfere with the unloading operations and the movement of landfill equipment. The minimum width of the working face should be approximately twice the width of the tractor to allow the tractor to move from side to side and compact the entire exposed surface. Ponding on the landfill surface, which will result in excessive seepage into the landfill, must be prevented. Precautions must be taken to prevent runoff water from eroding the cover material and exposing the wastes. Adequate drainage is therefore essential both during the filling operation and after the landfill is completed. Proper drainage usually requires periodic regrading of the site and the use of culverts or grassed waterways. It is recommended that the slope of the surface of the completed fill should be a minimum of one percent. Since the landfill will undergo uneven settlement, it may be necessary to slope the original surface more than one percent to maintain a one percent slope after settlement.

4.4.3.6 Cover Material. Guidelines for the selection, use and placement of the intermediate and final cover material must be set forth in the design and construction specification for each individual landfill. Many problems related to the behavior of the placed fill may be dealt with by the use of common sense and sound operational practices.

4.4.4 Special Operations. Special operations may be necessary because of climatic, geological, or other conditions. (See paragraphs 4.4.4.4 and 4.4.4.5.)

4.4.4.1 Control of Dust and Odor. Dust can be effectively controlled by periodic sprinkling of the area with water. The use of calcium chloride on access roads can control the dust from road traffic. Odors are not a problem at a properly designed and operated landfill. In most instances the escape of malodorous gases is the result of poor design and/or poor operation. When these gases or odors are observed, the operator must immediately notify the installation engineer as the presence of these gases might indicate methane or other dangerous compounds in explosive, or at least hazardous, concentrations. The following procedures are recommended to minimize odors:

a. Cover freshly dumped garbage promptly and rapidly with earth or other waste.

b. Using suitable compacted cover material, cover waste daily to at least a 15 centimeter (six-inch) depth to seal in odors.

c. Seal surface cracks weekly, or more often if required, in the completed areas of the site.

d. Eliminate surface pools, side leaching action, and seepage at the toes of filled embankments.

4.4.4.2 Control of Litter and Blowing Waste. Fences should be used to catch windblown litter and paper. It is recommended that the entire landfill area be surrounded with a hog-wire-type fence. Portable fences can also be used near the site and moved as the operation area changes. Because paper may be blown over portable or permanent type fences, prompt compaction and covering and daily pickup of loose paper should be practiced. However, selection of a sheltered site or design of a sheltered operation, if possible, will eliminate a major amount of the litter problem.

4.4.4.3 Fire Protection. Fires in landfills can be caused by dumping hot ashes or incinerator residue, or by the presence of combustible or highly flammable waste materials. While small surface fires can be extinguished with water, deep-seated fires in small and confined areas can be brought under control by excavating and spraying with water. Whenever possible, all types of fires should be smothered with well compacted earth. The range of the large fires must first be confined with trenches, dirt fire breaks and water curtains. When the fire is under control, select a small front and smother the fire with earth, using the earth as a shield at all times. Under no circumstances should the equipment be placed in contact with the fire.

4.4.4.4 Wet Weather Operations. Wet weather can seriously hamper the operations of a sanitary landfill by making the soil too soft, mucky, or slippery for effective equipment operation. Wet weather can also seriously interfere with trenching, covering, and general traffic flow to and from the working face. Some of the recommended practices for wet weather operations include:

a. Use well drained sites with sandy loam soil.

b. Build all-weather roads.

c. Stockpile such materials as cinders, construction debris, broken asphalt paving, or planking, for the construction of lanes from the permanent access road to the area of operation.

d. If a load is not extremely heavy, a tractor can sometimes be used to tow the refuse trucks to the operating area. Caution must be practiced to avoid damage to the trucks.

e. Alternate sites which are accessible under wet weather conditions can be used during wet weather or during

such emergencies as fires, excessive traffic or equipment breakdowns. As a last possibility, waste should be dumped some distance from the operating face of the fill and bulldozed to the area of operation.

4.4.4.5 Winter Operations. With good planning and proper operating techniques, a sanitary landfill can be operated successfully in such severe conditions as the winters of the northern states. However, if the trench method is used, the trenches should be excavated before the onset of cold weather. It may be necessary to stockpile cover material and shelter it with straw, leaves, or other material to prevent it from freezing. The material should be piled loosely with a minimum of compaction. All snow and ice should be removed from the trenches before use. Snow fences can be used to protect the access roads from snowdrifts. A well constructed, heated tractor cab will enable an equipment operator to work efficiently during the cold weather. An operations headquarters, complete with a heated garage for equipment storage, should be provided.

4.4.4.6 Rodent Control. No problems with rodents should arise if the landfill is properly covered and compacted each day. If rodents do become a problem, the large quantities of garbage should be mixed with other refuse and thoroughly covered with earth. The size of the fill cells should also be decreased by covering the refuse more often. It may be necessary to use pesticides to eliminate the rodent problem. However, the use of pesticides must be subject to the approval of the installation engineer. All pest eradication programs must be carried out by trained personnel. However, the rodent problem generally will be eliminated with proper placement and compaction of appropriate cover material.

4.4.4.7 Gas Control. Control of the movement of decomposition gases is of major importance. Methane (CH_4) and carbon dioxide (CO_2) are the gases of greatest concern at landfills. Hydrogen sulfide (H_2S) and other malodorous gases must also be controlled when traces of them are detected. Methane gas is a colorless, odorless gas that, in concentrations of 5 to 15 percent by volume, is highly explosive in the presence of atmospheric oxygen. Carbon dioxide (CO_2) inhibits combustion. However, CO_2 reacts to a limited extent with water to form carbonic acid, which can dissolve mineral matter, thereby increasing hardness of underground water. The natural soil, hydrologic and geologic conditions may provide control of gas movement. If such conditions are not prevalent, the following methods (Figure 4-21) should be considered:

a. Permeable Methods. Lateral gas movement can be prevented by using gravel vents or gravel-filled trenches

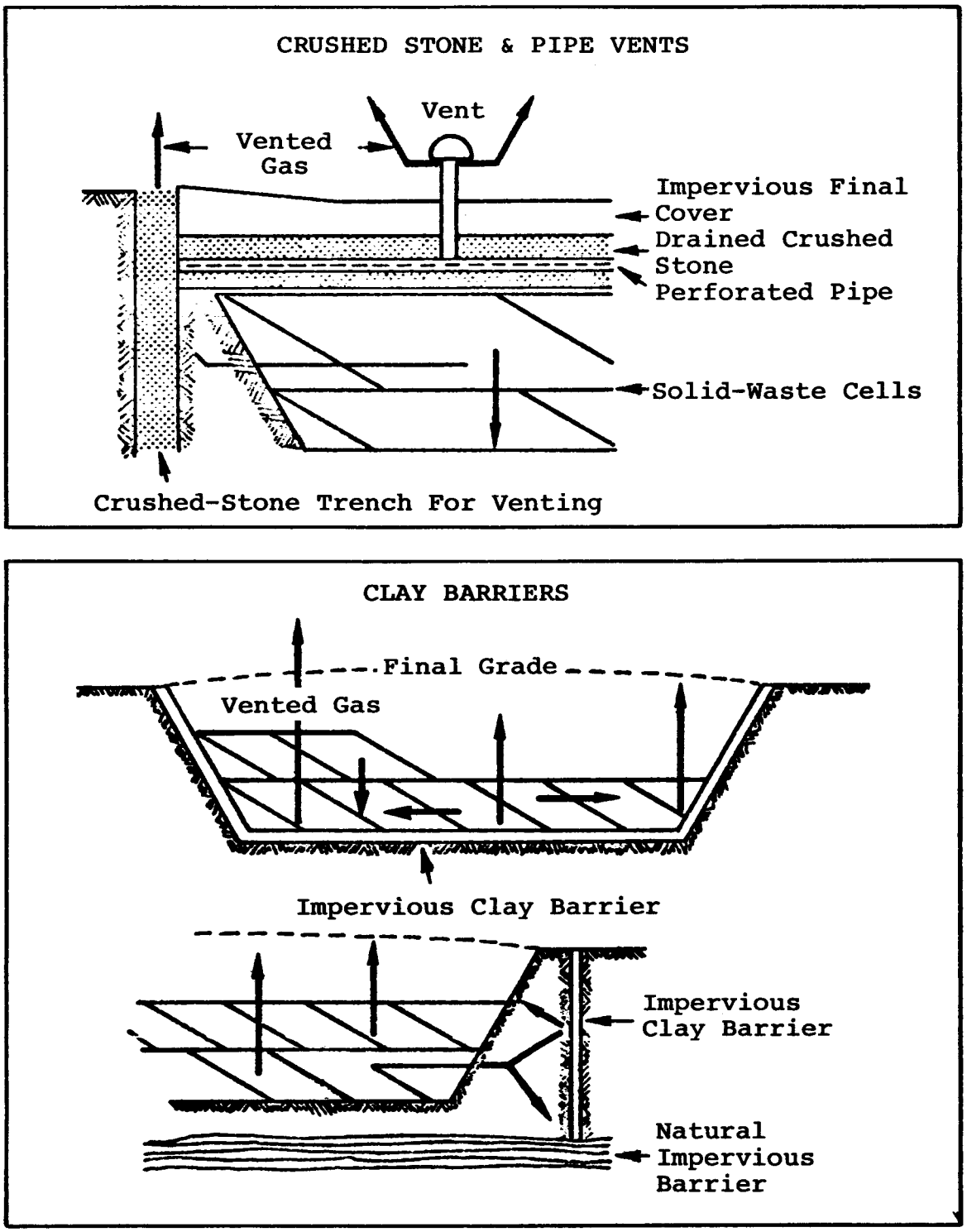

FIGURE 4-21
Methods of Controlling Gas Movement

which are more permeable than the surrounding soil. Preferably, the trenches should be somewhat deeper than the fill to make sure they intercept all lateral gas flow. The filter material should be graded to avoid infiltration and clogging by the adjacent soil carried in by moving water. If possible, the trench should be built so that it drains naturally; field tile is often placed in the bottom of the trench to facilitate such natural drainage. The surface of gravel trenches should be kept free of soil and vegetation, because they retain moisture and hinder venting. In another method, vent pipes are inserted through a relatively impermeable top cover. Collecting laterals placed in shallow gravel trenches within, or on top of, the waste can be connected to a vertical riser. The sizes and spacings required have not been established, but they depend on the rate of gas production, total weight of solid waste, and the gas permeability of both the cover and the surrounding soil. In some cases, vertical risers have been used to burn off the vented gases. Vent pipes should not be located near buildings; if this situation is impractical, the vent pipes should discharge above the roof line. Pumped exhaust wells may be used for gas venting. In this method, pipe vents are attached to the line of a suction pump to create differential driving pressure to facilitate gas movement. However, this latter method is costly and requires frequent maintenance.

b. Impermeable Methods. The movement of gas through soils can be controlled by using materials that are more impermeable to it than the surrounding soil. An impermeable barrier can be used to contain and vent the gas through the top cover or to block the flow of gas. The most practical method, hence the most common, calls for the use of compacted clay; however, other fine grained soils may also be used. The clay can be placed in an excavation as a liner or installed as a curtain wall to block lateral underground gas flow. A clay layer 0.46 to 1.22 meters (18 to 48 inches) thick is adequate; it must be continuous and not penetrated by solid waste or outcroppings of the surrounding soil or rocks. The liner should be constructed as the fill progresses, in that prolonged exposure to air will dry the clay and cause it to shrink and crack. The use of synthetic liners can also be used for ground water protection, particularly in the areas where there may be hazardous or infectious waste. (See paragraph 5.2.4.)

4.4.5 Completing the Sanitary Landfill and Ultimate Site Use. Although a solid waste landfill area will never attain the stability of a compacted pure earth fill, there are many practical uses of a completed military installation landfill, such as parks, playgrounds, golf courses and parking areas. The use of the site may be restricted by its surroundings and to some extent the amount of settlement in the fill. If the

final use of the fill area is known before the fill is begun, the method of operation and the degree of compaction can be adjusted for maximum efficiency of that use. Because of settling and potential gas problems, heavy or enclosed construction should be avoided. The following activities are recommended to aid in completion of the fill:

a. Grading. Completed sanitary fills should be sloped gradually from the original ground level to the top of completed fills. Protect slopes and completed areas against erosion in the following manner: excavate the last trench in the area 0.9 meter (three feet) deeper than the other trenches, and stockpile this additional soil on the surface of the completed fill or other convenient place. As sections of the last trench are filled, this extra soil should be used to cover the refuse. Grade and cover the top layer of refuse to provide a gradual slope to the original ground level (Figure 4-22).

b. Grassing Fill. Completed portions of a sanitary fill are bare of vegetation. This condition may lead to erosion and, after drying, a source of dust. A planted grass cover is recommended on all completed fills and on those portions of operating fills that are not used for truck travel. Grasses can influence the amount of moisture within the refuse cell through evaporation and transpiration processes. Knowledge of these processes may be useful, if appropriate rainfall and ground water conditions exist. In a dry arid area, where maintenance of covering vegetation requires some form of irrigation and refuse moisture levels are not critical, a drought-resistant native grass would be appropriate. Should there be a need to reduce the possibility of saturating the refuse, it would be advisable to plant a deep rooting grass which will require large amounts of water to grow and mature. Cover requirements are dictated by local conditions. Air Force personnel refer to AFM 85-6 for information concerning plantings.

c. Settlement. Settlement of the landfill is dependent on the depth of the fill, composition, compacting of the material, moisture content and other factors. Studies have indicated that approximately 90 percent of the ultimate settlement will occur in the first five years. The final ten percent will occur over a much longer period.

d. Maintenance. Completed landfills generally require maintenance because of differential settlement. Maintenance consists primarily of resloping the surface to maintain good drainage and filling in small depressions that result from uneven settlement.

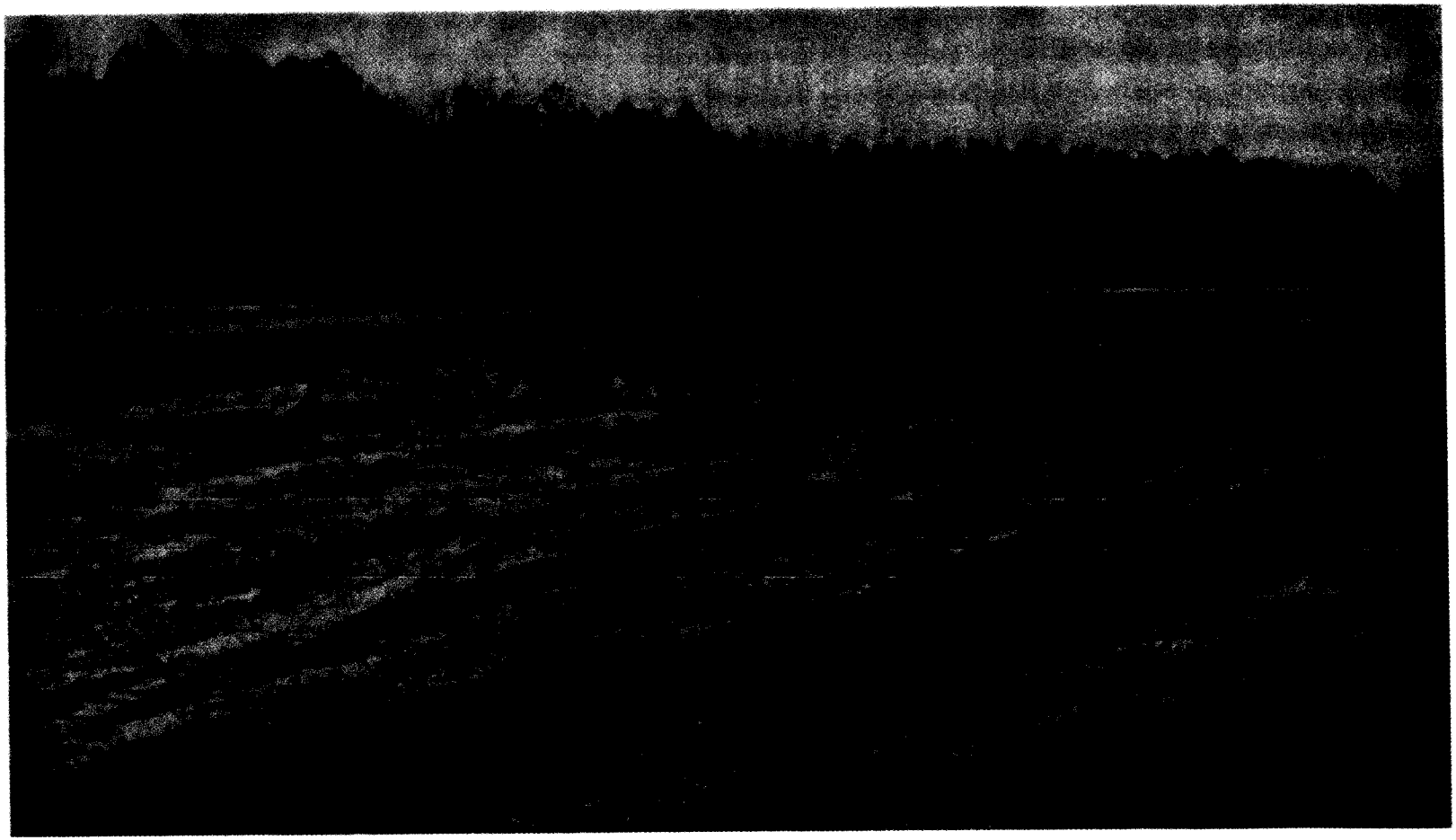

FIGURE 4-22
Completed Landfill

e. Permanent Records. Upon landfill completion, a plan and detailed description including general locations, number and types of cells, and details of original terrain should be recorded by the installation engineer. Items noted in this plan should include the type, location, amount and date of burial of all hazardous materials. The location of completed sanitary fills should also be recorded on installation master plans.

CHAPTER 5. WASTES REQUIRING SPECIAL HANDLING

5.1 TYPES OF WASTES. Chapters 1 through 4 of this manual describe a system for the management of municipal type wastes. This chapter deals with those wastes which should be handled by separate means because of their potential to cause environmental damage or to harm personnel who generate, handle, collect and dispose of them. U.S. Army personnel shall handle all hazardous and toxic materials in accordance with Chapter 6, AR200-1, and all medical, infectious wastes in accordance with paragraph 5-9, AR40-5. Refer also to policy change of DLA responsibilities as directed in DOD 4160.21-M, Chapter IV, paragraph D. Air Force personnel shall refer to AFR 19-1. The general classes of hazardous waste are:

a. Toxic chemical.

b. Flammable.

c. Radioactive.

d. Explosive.

e. Biological.

Hazardous wastes can exist as solids, sludges, liquids, or gases. At military installations hazardous wastes may result from excess or out-of-date warehouse material, routine maintenance and repair, industrial activities, pollution abatement and sanitary engineering facilities, and medical and laboratory facilities. Enumeration of hazardous wastes is a difficult task in that many waste materials, if present under the appropriate conditions, could be considered as hazardous. Table 5-1 provides a list of nonradioactive, high-hazard compounds so designated by the Environmental Protection Agency. In addition to this list, the Naval Supply System Command Publication 4500, Consolidated Hazardous Item List (CHIL), includes some 4000 stock items in the Navy Supply System. This list is compiled under criteria established by the National Fire Underwriters for materials that are toxic, flammable, explosive or hazardous in other ways. The remainder of this chapter discusses available technology for treatment and disposal of hazardous wastes and lists sources of assistance and specific guidelines for managing certain hazardous wastes at military installations.

5.2 AVAILABLE TECHNOLOGY. Treatment and disposal technology is available to process most hazardous waste streams. Table 5-2 lists the various types of technology and their applications. These treatment and disposal processes are normally used in combination to provide one or more of the following:

TABLE 5-1
Nonradioactive, High-Hazard Compounds

Miscellaneous Inorganics	Pentaborane-11
	Perchloric acid (to 72%)
Ammonium chromate	Phosgene (carbonyl chloride)
Ammonium dichromate	Potassium arsenite
Antimony pentafluoride	Potassium chromate
Antimony trifluoride	Potassium cyanide
Arsenic trichloride	Potassium dichromate
Arsenic trioxide	Selenium
Cadmium (alloys)	Silver azide
Cadmium chloride	Silver cyanide
Cadmium cyanide	Sodium arsenate
Cadmium nitrate	Sodium arsenite
Cadmium oxide	Sodium bichromate
Cadmium phosphate	Sodium chromate
Cadmium potassium cyanide	Sodium cyanide
Cadmium (powdered)	Sodium monofluoroacetate
Cadmium sulfate	Tetraborane
Calcium arsenate	Thallium compounds
Calcium arsenite	Zinc arsenate
Calcium cyanides	Zinc arsenite
Chromic acid	Zinc cyanide
Copper arsenate	
Copper cyanides	Halogens and Interhalogens
Cyanide (ion)	
Decaborane	
Diborane	Bromine pentafluoride
Hexaborane	Chlorine
Hydrazine	Chlorine pentafluoride
Hydrazine azide	Chlorine trifluoride
Lead arsenate	Fluorine
Lead arsenite	Perchloryl fluoride
Lead azide	
Lead cyanide	Miscellaneous Organics
Magnesium arsenite	
Manganese arsenate	
Mercuric chloride	Acrolein
Mercuric cyanide	Alkyl leads
Mercuric diammonium chloride	Carcinogens (in general)
Mercuric nitrate	Chloropicrin
Mercuric sulfate	Copper acetylide
Mercury	Copper chlorotetrazole
Nickel carbonyl	Cyanuric triazide
Nickel cyanide	Diazodinitrophenol (DDNP)
Pentaborane-9	

TABLE 5-1 (Continued)
Nonradioactive, High-Hazard Compounds

Miscellaneous Organics (Continued)	Silver tetrazene
	Tear gas (CN) (chloro-acetophenone)
Dimethyl sulfate	Tear gas (CS) (2-chlorobenzylidene malononitrile)
Dinitrobenzene	Tetrazene
Dinitro cresols	VX (ethoxy-methyl phosphoryl N,N dipropoxy-(2-2) thiocholine)
Dinitrophenol	
Dinitrotoluene	Organic Halogen Compounds
Dipentaerythritol hexanitrate (DPEHN)	
GB (propoxy (2)-methylphosphoryl fluoride)	Aldrin
Gelatinized nitro-cellulose (PNC)	Chlorinated aromatics
Glycol dinitrate	Chlordane
Gold fulminate	Copper acetoarsenite
Lead 2,4-dinitroresor-cinate (LDNR)	2,4-D (2,4-dichloro-phenoxyacetic acid)
Lead styphnate	DDD
Lewisite (2-chloro-ethenyl dichloroar-sine)	DDT
	Demeton
Mannitol hexanitrate	Dieldrin
Nitroaniline	Endrin
Nitrocellulose	Ethylene bromide
Nitrogen mustards 2,2',2" trichloro-triethylamine)	Fluorides (organic)
	Guthion
	Heptachlor
Nitroglycerin	Lindane
Organic mercury compounds	Methyl bromide
	Methyl chloride
Pentachlorophenol	Methyl parathion
Picric acid	Parathion
Potassium dinitrobenz-furoxan (KDNBF)	Polychlorinated biphenyls (PCB)
Silver acetylide	

a. Volume reduction.

b. Component separation.

c. Detoxification.

d. Material recovery.

TABLE 5-2
Hazardous Waste Treatment and Disposal Processes

Process	Functions Performed[1]	Types of Waste[2]	Forms of Waste[3]	Resource Recovery Capability
Physical treatment:				
Carbon sorption	VR, Se	1, 3, 4, 5	L, G	Yes
Dialysis	VR, Se	1, 2, 3, 4	L	Yes
Electrodialysis	VR, Se	1, 2, 3, 4, 6	L	Yes
Evaporation	VR, Se	1, 2, 5	L	Yes
Filtration	VR, Se	1, 2, 3, 4, 5	L, G	Yes
Flocculation/settling	VR, Se	1, 2, 3, 4, 5	L	Yes
Reverse osmosis	VR, Se	1, 2, 4, 6	L	Yes
Ammonia stripping	VR, Se	1, 2, 3, 4	L	Yes
Chemical treatment:				
Calcination	VR	1, 2, 5	L	
Ion exchange	VR, Se, De	1, 2, 3, 4, 5	L	Yes
Neutralization	De	1, 2, 3, 4	L	Yes
Oxidation	De	1, 2, 3, 4	L	
Precipitation	VR, Se	1, 2, 3, 4, 5	L	Yes
Reduction	De	1, 2	L	
Thermal treatment:				
Pyrolysis	VR, De	3, 4, 6	S, L, G	Yes
Incineration	De, Di	3, 5, 6, 7, 8	S, L, G	Yes
Biological treatment:				
Activated sludges	De	3	L	No
Aerated lagoons	De	3	L	No
Waste stabilization ponds	De	3	L	No
Trickling filters	De	3	L	No
Disposal/storage:				
Deep-well injection	Di	1, 2, 3, 4, 6, 7	L	No
Detonation	Di	6, 8	S, L, G	No
Engineered storage	St	1, 2, 3, 4, 5, 6, 7, 8	S, L, G	No
Land burial	Di	1, 2, 3, 4, 5, 6, 7, 8	S, L	No
Ocean dumping	Di	1, 2, 3, 4, 7, 8	S, L, G	No

Sources: EPA Contract Nos. 68-03-0089, 68-01-0762, and 68-01-0556. 1/ Functions: VR, volume reduction; Se, separation; De, detoxification; Di, disposal; and St, storage. 2/ Waste types: 1, inorganic chemical without heavy metals; 2, inorganic chemical with heavy metals; 3, organic chemical without heavy metals; 4, organic chemical with heavy metals; 5, radiological; 6, biological; 7, flammable; and 8, explosive.
Waste forms: S, solid; L, liquid; and G, gas.

e. Encapsulation.

f. Ultimate disposal.

Of particular interest to installation personnel concerned with management of hazardous wastes are incineration, pyrolysis, land burial, landfill, deep-well injection, engineered storage, and encapsulation.

5.2.1 Incineration. Incinerators for hazardous wastes normally consist of a waste storage facility, a burner and combustion chamber, an efficient purification device (scrubbers, precipitators, afterburners, bag houses), and a vent or stack. Basic types of incineration units for hazardous wastes include:

a. Open pit.

b. Open burning.

c. Multiple chamber.

d. Multiple hearth.

e. Rotary kiln.

f. Fluidized bed.

g. Liquid combustors.

h. Catalytic combustors.

i. Afterburners.

j. Gas combustors.

k. Stack flares.

5.2.2 Pyrolysis. This method decomposes hazardous wastes thermally at temperatures about 482 to 816°C (900 to 1500°F). The wastes are broken down in an essentially oxygen-free atmosphere into steam, carbon oxides, volatile vapors and carbon char.

5.2.3 Land Burial. This method is adaptable to hazardous wastes that require complete-containment, permanent disposal. Disposal is accomplished by either near-surface or deep burial. In near-surface burial, the material is deposited either directly into the ground or is deposited in stainless steel tanks or concrete-lined pits beneath the ground.

5.2.4 Landfill. In addition to the types of landfill described in paragraph 4.4, hazardous wastes may be landfilled by mixing them with soil. Hazardous wastes that are acceptable under Navy standards for this latter method include sludges from domestic wastewater treatment plants. Table 5-3 lists three classes of landfills and the type wastes permitted to be disposed of in them. Disposal of hazardous wastes is normally restricted to Class I landfills. The criteria for Class I landfills are listed in Table 5-4. A special landfill may be constructed so that leachate from hazardous waste is collected and treated to remove its harmful constituents. Collection of leachate requires that a barrier exists between the solid waste which produces leachate and the water that would become polluted. A variety of materials has been used as barriers. An evaluation of a number of barrier materials is included in the Environmental Protection Agency report, Liners for Land Disposal Sites, an Assessment (see the Bibliography).

5.2.5 Deep-Well Disposal (Injection). This method is used to dispose of raw or treated filtered hazardous wastes by pumping it into deep wells where it is contained in the pores of permeable subsurface rock which must be separated from other ground water supplies by impermeable layers of rock or clay.

5.2.6 Engineered Storage. This method has potential for those hazardous wastes for which no adequate disposal methods exist. An engineered storage facility would have applicability until a method for recycling or disposal of these wastes is developed.

5.2.7 Encapsulation. Those wastes which are not amenable to detoxification may be encapsulated in some permanent material prior to disposal. Available materials include concrete, molten asphalt, and plastics (polyurethane, polyethylene). Leachable heavy metal wastes are examples of wastes which may require encapsulation prior to land disposal. In some cases, the resulting encapsulated wastes will require casting in drums prior to deposition in the landfill. The purpose of encapsulation is to limit the leachability of the potentially toxic materials contained therein by physically keeping water from contacting the hazardous materials or their containers.

5.3 SOURCES OF ASSISTANCE. Several private companies have built facilities to treat, dispose of, and recycle many hazardous wastes. These companies sell waste processing services to industrial activities in their areas, generally within a 805-kilometer (500-mile) radius. A list of these facilities is provided in Hazardous Waste Management Facilities in the United States, a publication of the U.S.

TABLE 5-3
Landfill Capabilities

Class	Acceptable Wastes
I	Liquid, semi-solid or solid wastes which constitute a high degree of hazard to beneficial water uses. These landfills must either confine the wastes to the disposal site with no likelihood of escape, or they must be situated in a location where the wastes can percolate into underlying formations which have no hydraulic continuity with usable waters. A Class I site may accept all groups of wastes.
II	Decomposable, organic materials or waste mixtures which contain organic mixtures such as garbage, rubbish, and wood materials. These landfills must be separate from underlying or adjacent usable water. In addition, a Class II landfill may accept any wastes deemed suitable for disposition for a Class III landfill.
III	Inert solid wastes posing no direct threat to water quality.

Environmental Protection Agency. (See the Bibliography.) DOD-operated non-radioactive hazardous waste treatment, storage, and disposal sites are located at arsenals, depots and ammunition plants. A partial list of DOD activities that provide assistance with hazardous materials is included in Appendix E. Local EPA offices often provide assistance, and state authorities may help in some cases. Air Force installations requiring assistance should contact AFLC/SGC, Wright Patterson AFB, Ohio, in accordance with AFR 19-1.

5.3.1 Waste Hazardous Materials. These materials include military material and supply items that present hazards to personnel and facilities while being handled or stored. Detailed disposal guidance for these wastes is contained in Naval Supply Systems Command Publication 4500, Consolidated Hazardous Item List. Naval facilities can receive additional assistance from the cognizant Engineering Field Division. Air Force installations should refer to AFM 91-11 for Air Force policy on hazardous waste materials.

5.3.2 Process Wastes. These wastes include sludges and chemicals from industrial processes and petroleum products. Sludges from military wastewater treatment plants (domestic and industrial) shall be handled as described in the

TABLE 5-4
Class I Landfill Site Criteria

1. Geological conditions are naturally capable of preventing lateral hydraulic continuity between liquids and gases emanating from wastes in the site and usable surface or ground waters, or the disposal area has been modified to achieve such capability.

2. Underlying geological formations which contain rock fractures or fissures of questionable permeability must be permanently sealed to provide a competent barrier to the movement of liquids or gases from the disposal site to usable water.

3. If inundation of a disposal area is planned, the inundation shall not occur until the site is completed.

4. Disposal areas shall not be subject to washout.

5. Leachate and subsurface flow into the disposal area shall be contained within the site unless provision for other disposition is made.

6. Sites shall not be located over zones of active faulting or where other forms of geological change would impair the competence of natural features or artificial barriers which prevent continuity with usable water.

7. Sites made suitable for use by man-made physical barriers shall not be located where improper operation or maintenance of such structures could permit the waste, leachate, or gases to contact usable ground or surface water.

8. Sites which comply with 1 through 7 above but would be subject to inundation by a tide or a flood of greater than 100-year frequency may be considered as a limited Class I disposal site.

tri-service Military Wastewater Treatment Manual. Oily wastes such as discarded lubrication oil, cutting oil, oily bilge wastes, recovered spilt oil, and oil contaminated sorbents and beach material shall be collected and separated to the extent practicality permits and then recycled appropriately. For specific details consult the Naval Facilities

Engineering Command's Oil Spill Control Manual, NAVFAC P-908, September, 1976. Refer also to the Bibliography (Chapter 5) for applicable reference.

5.4 GUIDELINES FOR SPECIFIC WASTES. The following paragraphs deal with components of the waste stream that have been studied as problems and guidance or regulations that have been developed to deal with them. Refer to paragraph 2.3.6.2 for a discussion of U.S.D.A. regulations related to foreign organic wastes disposal.

5.4.1 Hospital Wastes. Included in any discussion of hazardous wastes are wastes generated by medical facilities. In addition to the conventional paper, glass, plastic and metallic wastes generated, there are biological (most of them pathological by nature), and "sharp" wastes to contend with. Biological wastes include bacteria cultures, operating room and emergency room wastes, maternity ward wastes, and soiled dressings. Sharp wastes pertain to such items as disposable hypodermic needles and disposable scalpels. All of these wastes are categorized as hazardous in that if not handled with exceptional caution, they can cause sickness, inflict wounds, or possibly cause fatalities to those persons handling them. The following guidelines are provided for disposal of these wastes. (Army hospital wastes should be disposed of in accordance with paragraph 5-9 of AR 40-5.)

a. Since 50 percent or more of all hospital waste is combustible, these wastes (including biological wastes) should be disposed of by incineration where permitted, preferably in a multi-chambered incinerator. The effect of microbiological and other pathogenic contaminants as well as chemical contaminants can be destroyed through proper incineration, that is, with combustion temperatures ranging from 649 to 982°C (1200 to 1800°F). Hospital/dispensary wastes may be landfilled if an incinerator is not available. These wastes should be handled by those familiar with the hazards; and if landfilled, they must be covered immediately.

b. Garbage usually accounts for some 28 to 30 percent of hospital wastes. Garbage includes food wastes, their packaging materials and other food-associated items. These wastes should be disposed of by grinding/shredding and discharged to sanitary sewers. Pathological wastes shall not be deposited in sewers. The installation engineer should coordinate the disposal of these wastes with the installation surgeon. All wastes deposited into sewers shall be approved by the installation engineer. Garbage, as previously defined, can also be dealt with through incineration.

c. The remaining non-biological wastes shall be incinerated at a combustion temperature greater than or equal to 649°C (1200°F) or buried in a Class I or Class II landfill (see Table 5-3). It will be the installation engineer's responsibility to see that the proper methods are used. Again, the engineer should confer with the surgeon regarding the disposal of these wastes.

5.4.2 Pesticides and Pesticide Containers. The use of pesticides and their disposal must be by or under the direct supervision of a DOD trained and certified applicator. The hazards associated with toxic products require appropriate facilities, protective equipment and consideration of the potential for personal injury and environmental impact. Guidelines for disposal of pesticides and their containers should be obtained by each service from their engineering field division applied biologists. Additional guidelines are given in the following paragraphs.

5.4.2.1 Pesticides.

a. Organic pesticides (excluding the organic mercury, cadmium, lead and arsenic types) may in some cases be incinerated and/or disposed of in sanitary landfills. Determination of disposal method is on a case-by-case basis and no action should be taken without consultation with the respective military organization responsible for pesticides application and cognizant state and EPA authorities.

b. Metallo-organic pesticides (excluding organic mercury) should be so treated that the heavy metals can be recovered from the hydrocarbon structure. Following such treatment they should be incinerated or, if incineration is not available, buried in accordance with CFR 40 165 of 1 May 1974 in a specially designated landfill as discussed in paragraph 5.4.2.1a.

c. Organic mercury, cadmium, lead, arsenic, and all inorganic pesticides shall be deactivated by conversion to non-hazardous compounds and the heavy metals recovered. Methods and specific applications are currently under study and until the study is complete and published, follow guidelines outlined in paragraph 5.4.2.1a. If chemical deactivation facilities are not available then such pesticides shall be encapsulated and buried in a specially designated landfill. Records sufficient to permit location for retrieval shall be maintained.

5.4.2.2 Pesticide Containers. Pesticide containers are categorized into Group I, Group II, and Group III. Dispose of or decontaminate as follows:

a. Group I Containers. Combustible containers which formerly contained organic or metallo-organic pesticides excluding organic mercury, cadmium, lead, or arsenic compounds, shall be incinerated in accordance with procedures outlined in paragraph 5.4.2.1a. or buried in a specially designated landfill.

b. Group II Containers. Non-combustible containers which formerly contained organic or metallo-organic pesticides excluding organic mercury, cadmium, lead or arsenic compounds, shall be triple-rinsed. Containers in good physical condition may then be returned to the pesticide manufacturer for reuse with the same chemical class of pesticides previously contained providing such reuse is in accordance with currently applicable U.S. Department of Transportation regulations. Other rinsed containers may be recycled as scrap metal, once punctured to ensure complete drainage of rinse water. Rinse waters and unrinsed containers should be disposed of in a specially designated landfill or, if practical, containers should be incinerated under guidelines in paragraph 5.4.2.1a.

c. Group III Containers. Containers (both combustible and non-combustible) which formerly contained organic mercury, cadmium, lead, arsenic or inorganic pesticides and which have been triple-rinsed and punctured to facilitate complete drainage and prevent reuse, shall be buried in a sanitary landfill. Rinse waters and unrinsed containers should be disposed of in a specially designated landfill or, if practical, containers should be incinerated under guidelines in paragraph 5.4.2.1a. Such containers which are not rinsed shall be encapsulated and buried in a specially designated landfill. All pesticide residue and pesticide containers shall be disposed of in a manner consistent with their labeling.

d. Decontamination. The following method of decontaminating pesticide containers, derived from material furnished by the Federal Environmental Protection Agency, is safe for cleaning containers which have held organo-phosphate type pesticides. Rinse solution ingredients for various container sizes appear in Table 5-5. Perform the following procedures for effective container decontamination:

(1) Drain container as completely as possible.

(2) Carefully add the water, detergent and caustic soda, and then tighten the bungs and other closures.

(3) Rotate the container carefully to wet all inner surfaces with the rinse solution.

(4) Let the container stand for at least 15 minutes with occasional agitation. The longer the rinse solution remains in the container, the more complete the degradation of pesticide residues.

(5) Remove all bungs and closures and drain the rinse solution into an area where it will eventually dissipate away from water supplies.

(6) Thoroughly flush the inside and outside of the container with clean water.

(7) Tighten all bungs and closures.

5.4.3 Fluorescent Lamps. Each fluorescent lamp contains a minute quantity of mercury. This quantity of mercury does not present a hazard unless the lamps are collected or disposed of in large quantities at one time in one place. If the lamps are disposed of in the solid waste stream at a rate of one to two lamps per 0.91 metric ton (ton) of waste, the concentration of mercury in the waste will not exceed the concentration of mercury normally found in many soils. The following guidance is provided:

a. Dispose of fluorescent tubes in an unsegregated manner. Do not break the tubes prior to disposal. The use of portable hammermills or tubebusters to reduce the volume of tubes is not recommended. Use of this type equipment can present a personnel hazard from mercury vapor which is liberated from the tubes when they are broken.

b. In areas with stable (Class I) landfills or incinerators, dispose of the lamps in an unsegregated manner so there are one to two lamps per 0.91 metric ton (ton) of waste.

c. In areas with questionable landfills, wastes with fluorescent tubes may be incinerated, if permitted. A landfill should not be used unless the rate of mercury (organic-methyl mercury) movement out of the landfill is within allowable limits. If suitable local disposal sites are not available, consideration should be given to collection of the tubes for shipment and disposal at a suitable landfill site.

TABLE 5-5
Solutions for Rinsing Containers

Container Size	Ingredients of Solution		
	Water	Detergent	Caustic Soda (Lye)
Less than 23 liters (5 gals)	0.5 liter (1 pt)	15 ml (1 tbsp)	--
46 liters (10 gals)	1.9 liters (2 qts)	30 ml (2 tbsps)	118 ml (1/2 cup)
68 liters (15 gals)	6.8 liters (1-1/2 gals)	59 ml (1/4 cup)	118 ml (1/2 cup)
136 liters (30 gals)	13.6 liters (3 gals)	118 ml (1/2 cup)	0.45 kg (1 lb)
250 liters (55 gals)	22.7 liters (5 gals)	237 ml (1 cup)	0.91 kg (2 lbs)

BIBLIOGRAPHY

BIBLIOGRAPHY

The following publications have been selected as general reference materials from a wealth of literature available on all aspects of solid waste management. Materials marked with an asterisk are available from:

National Technical Information Service
U.S. Department of Commerce
5258 Port Royal Road
Springfield, VA 22161

Material marked with a double asterisk is available from:

Logistics Management Institute
4701 Sangamore Road
Washington, D.C. 20016

Material marked with a triple asterisk is available from:

Navy Environmental Support Office
Naval Construction Battalion Center
Code 2512
Port Hueneme, California 93043

The remaining materials are available free of charge from:

Solid Waste Information Materials Control Section
U.S. Environmental Protection Agency
Cincinnati, Ohio 45268

CHAPTER 1. INTRODUCTION

Colonna, R.A., and McLaren, C., Decision-Maker's Guide in Solid Waste Management, Environmental Protection Publication SW-500, U.S. Government Printing Office, Washington, D.C., 1976.

**Measurement and Description of the DOD Solid Waste Problem, Project 8, Logistics Management Institute, Washington, D.C., March 1976.

***R^4 Decision Guide, NESO 20.2-008, Navy Environmental Support Office, Port Hueneme, California.

Solid Waste Management: Available Information Materials, Office of Solid Waste Management Programs, U.S. Environmental Protection Publication SW-58.23, U.S. Environmental Protection Agency, Washington, D.C., 1975.

Solid Waste Management: Glossary, Environmental Protection Publication SW-108ts, U.S. Environmental Protection Agency, Washington, D.C., 1972.

CHAPTER 2. COLLECTION AND STORAGE

AFWL-TR-73-120, Improving Air Force Base Refuse Collection Vehicle Routing, July 1973.

AFWL-TR-72-240, A Survey of Mathematical Techniques for Solid Waste Management, March 1973.

Black, R.J., "Solid Wastes Handling." Environmental Aspects of the Hospital, Volume 2, Supportive Departments, Public Health Service Publication No. 930-C-16, U.S. Government Printing Office, 1967.

Ralph Stone & Company, Inc., The Use of Bags for Solid Waste Storage and Collection, Environmental Protection Publication No. SW-42d, U.S. Environmental Protection Agency, 1972.

Weaver, L., "Refuse and Litter Control in Recreation Areas," Public Works, 98 (4):126-128,160, April 1967, reprinted, U.S. Government Printing Office, Washington, D.C., 1967.

CHAPTER 3. COLLECTION AND TRANSFER

Hagdahl, L.A., Solid Waste Transfer Stations: A State-of-the-Art Report on Systems Incorporating Highway Transportation, Environmental Protection Publication SW-99, U.S. Environmental Protection Agency, Cincinnati, Ohio, 1973.

Opportunities for Improving Productivity in Solid Waste Collection; Report of the Solid Waste Management Advisory Group, National Commission on Productivity, Washington, D.C., 1973.

Shuster, K.A., and Schur, D.A., Heuristic Routing for Solid Waste Collection Vehicles, Environmental Protection Publication SW-113, U.S. Government Printing Office, Washington, D.C., 1974.

User's Manual for COLMIS: A Collection Management Information System for Solid Waste Management, Volumes 1 & 2, Environmental Protection Publication SW-58c, U.S. Environmental Protection Agency, Washington, D.C., 1974.

CHAPTER 4. DISPOSAL

*A.M. Kinney, Inc., Solid Waste and Fiber Recovery Demonstration Plant for the City of Franklin, Ohio, U.S. Environmental Protection Agency, 1972.

Arella, D.G., Recovering Resources from Solid Waste Using Wet-Processing; EPA's Franklin, Ohio, Demonstration Project, Environmental Protection Publication SW-47d, U.S. Government Printing Office, Washington, D.C., 1974.

*Baling Solid Waste to Conserve Sanitary Landfill Space; A Feasibility Study, U.S. Environmental Protection Agency, San Diego City, California, 1973.

Boettcher, R.A., Air Classification of Solid Waste; Performance of Experimental Units and Potential Applications for Solid Waste Reclamation, Environmental Protection Publication SW-30c, U.S. Government Printing Office, Washington, D.C., 1972.

Brunner, Dirk R. and Keller, Daniel J., Sanitary Landfill Design and Operation, Environmental Protection Publication SW-65to, U.S. Government Printing Office, Washington, D.C., 1972.

Darnay, A., and Franklin, W.E., Salvage Markets for Materials in Solid Wastes, Environmental Protection Publication SW-29c, U.S. Government Printing Office, Washington, D.C., 1969.

Guidelines for the Thermal Processing of Solid Wastes (available from U.S. Environmental Protection Agency regional office or Washington, D.C. 20460).

Incentives for Recycling and Reuse of Plastics; A Summary Report, Environmental Protection Publication SW-41c.1, U.S. Environmental Protection Agency, Cincinnati, Ohio, 1973.

Incinerator Guidelines, 1969, Bureau of Solid Waste Management (available from U.S. Environmental Protection Agency regional office or Washington, D.C. 20460).

Interim Guide of Good Practice for Incineration at Federal Facilities, National Air Pollution Control Administration publication AP-46 (available from U.S. Environmental Protection Agency regional office or Washington, D.C. 20460).

Kiefer, T., The Salvage Industry; What It Is -- How It Works, Environmental Protection Publication SW-29c.1, U.S. Government Printing Office, Washington, D.C., 1973.

Lowe, R.A., Energy Recovery from Waste; Solid Waste as a Supplementary Fuel in Power Plant Boilers, Environmental Protection Publication SW-36d.ii., U.S. Government Printing Office, Washington, D.C., 1973.

Lowe, R.A., Loube, M., and Smith, F.A., Energy Conservation Through Improved Solid Waste Management, Environmental Protection Publication SW-125, U.S. Environmental Protection Agency, Cincinnati, Ohio, 1974.

New Techniques for Processing of Municipal Refuse, April 1971, Air Force Weapons Laboratory, Kirtland Air Force Base, New Mexico.

*Size-Reduction Equipment for Municipal Solid Waste, Volume 1, Procedures for Evaluating and Comparing Equipment, Volume 2, Inventory of Equipment, Midwest Research Institute, Environmental Protection Publication SW-53c, U.S. Environmental Protection Agency, 1973.

Sorg, Thomas J. and Hickman, H. Lanier, Jr., Sanitary Landfill Facts, USPHS Publication No. 1792, U.S. Government Printing Office, Washington, D.C., 1971.

*Stone, R.B., Buchanan, C.C., and Steimle, F.W., Jr., Scrap Tires as Artificial Reefs, Environmental Protection Publication SW-119, U.S. Government Printing Office, Washington, D.C., 1974.

*VTN, Inc., Effective Use of High Water Table Areas for Sanitary Landfill; Second Annual Report, Environmental Protection Publication SW-57d., U.S. Environmental Protection Agency, 1973.

*Wren, E.J., Preventing Landfill Leachate Contamination of Water, U.S. Environmental Protection Agency.

CHAPTER 5. WASTES REQUIRING SPECIAL HANDLING

Disposal of Hazardous Wastes; Report to Congress, Office of Solid Waste Management Programs, U.S. Environmental Protection Agency, Environmental Protection Publication SW-115, U.S. Government Printing Office, Washington, D.C., 1974.

Geswein, Allen J., Liners for Land Disposal Sites, U.S. Environmental Protection Agency Report SW-137, 1975.

Hayes, Albert J., Hazardous Waste Management Facilities in the United States, Environmental Protection Publication SW-146, U.S. Government Printing Office, Washington, D.C., 1974.

*Ottinger, R.S., et al, Recommended Methods of Reduction, Neutralization, Recovery or Disposal of Hazardous Wastes, Volume 1, Summary Report, U.S. Environmental Protection Agency, Washington, D.C., 1973.

GLOSSARY

GLOSSARY

AQUIFER - A subterranean geological formation of porous, water-bearing rock.

AUDIBLE REVERSE WARNING DEVICE - An apparatus, usually in the form of a bell, which is activated by the motion of a vehicle's wheels operating in the reverse gear. It produces a loud, rhythmic sound warning both driver and bystanders (or other motorists) that the vehicle is operating in reverse.

BALER - A machine used to compress and bind solid waste or other materials.

BASKET-GRATE INCINERATOR - An agitated bed incinerator where refuse is burned in a perforated grate shaped like a truncated cone and rotated about its axis of symmetry.

BEVERAGE CONTAINER - An airtight metal, glass, paper or plastic bottle, jar, can or carton containing a beverage under pressure of carbonation. Cups and other open receptacles are specifically excluded from this definition.

BTU (British Thermal Unit) - The quantity of heat required to increase the temperature of one pound of water one degree Fahrenheit.

BUBBLE TAILGATE - A hollow, roughly hemispherical frame which can be attached to a compactor vehicle, thereby increasing its total effective capacity.

BUCKET ELEVATOR - A conveyor belt which utilizes a system of bucket-like containers to transport materials.

BULKY WASTE - Large items of solid waste such as appliances, furniture, trees, large auto parts, branches, stumps and other oversize wastes whose large size precludes or complicates their handling by normal collection, processing or disposal methods.

CHARGING HOPPER - An enlarged opening at the top of the incinerator through which waste materials drop into the combustion chamber.

COLLECTION - The act of removing solid waste from the central storage point of a primary source. Types of collection include:

Alley - The picking up of solid waste from containers placed adjacent to an alley.

Carryout - Crew collection of solid waste from an on-premise storage area using a carryout container, carrycloth, or a mechanical method.

Contract - The collection of solid waste carried out in accordance with a written agreement in which the rights and duties of the contractual parties are set forth.

Curb - Collection of solid waste from containers placed adjacent to a thoroughfare.

Setout/Setback - The removal of full and the return of empty containers between the on-premise storage point and the curb by a collection crew.

COLLECTION FREQUENCY - The number of occasions collection is provided in a given period of time.

COMPACTOR -

Mobile - A vehicle with an enclosed body containing mechanical devices that convey solid waste into the main compartment of the body and compress it.

Sanitary Landfill - A vehicle equipped with a blade and rubber tires sheathed in steel or hollow steel cores; both types of wheels provide a compaction and a crushing effect.

Stationary - A machine that reduces the volume of solid waste by forcing it into a removable container.

COMPACTION RAM - An apparatus, usually hydraulically (or pneumatically) operated, whose function is the compression or compaction of waste materials into a smaller volume. It is usually constructed of a high grade steel.

COMPACTION RATIO - The ratio of the solid waste volume prior to compaction to the volume after compaction.

CONSTRUCTION AND DEMOLITION WASTE - The waste building materials, packaging, and rubble resulting from construction, remodeling, repair and demolition operations on pavements, residences, buildings, and other structures.

CONTROLLED-AIR INCINERATOR - A two-chamber incinerator where the first chamber is kept oxygen deficient and the second chamber is oxygen rich. The second chamber uses large amounts of clean fuel to complete combustion.

CORRUGATED CONTAINER WASTE - Discarded corrugated boxes.

CRAWLER TRACTOR - A vehicle which moves on metal treads (similar to those of an army tank) instead of rubber wheels. Also referred to as a bulldozer.

CRUSHER - Size reduction apparatus which operates by crushing material between a rotating and a stationary element. Units consist of either two rotating drums or a rotating wheel in contact with a stationary wall.

DEFENSE PROPERTY DISPOSAL OFFICE (DPDO) - The organizational entity having responsibility for and control over disposable property. A component of the Defense Supply Agency.

DEMILITARIZATION - The act of destroying the military offensive or defensive advantages inherent in certain types of equipment or material. The term comprehends mutilation, dumping at sea, scrapping, melting, burning, or alteration designed to prevent the further use of this equipment and material for its originally intended military or lethal purpose.

DUMPSTER - A large container which serves as a depository for solid waste materials. When filled the contents are dumped by mechanical means into a larger collection vehicle.

ENCAPSULATED - A method used in the disposal of hazardous substance which uses an impervious container made of plastic, glass, or other suitable material which will not be chemically degraded by the contents. This container then should be sealed within a durable container made from steel, plastic, concrete, or other suitable material of sufficient thickness and strength to resist physical damage during and subsequent to burial or storage.

FLAIL-MILL - A size reduction apparatus consisting of flexible arms rotating on an armature which break material by impact. The arms are generally light and will bypass large inert items.

FOOD WASTE - Animal and vegetable waste resulting from the handling, storage, sale, preparation, cooking, and serving of foods; commonly called garbage.

GROUNDWATER - Water present in the saturated zone of an aquifer.

HAMMERMILL - A broad category of high-speed equipment that uses pivoted or fixed hammers or cutters to crush, grind, chip, or shred solid wastes.

HAZARDOUS WASTES - Any waste or combination of wastes which pose a substantial present or potential hazard to human health or living organisms because such wastes are non-degradable or persistent in nature or because they can be biologically magnified, or because they can be lethal, or because they may otherwise cause or tend to cause detrimental effects.

HEAVY METALS - Metallic elements of higher atomic weights, including but not limited to arsenic, cadmium, copper, lead, mercury, manganese, zinc, chromium, tin, thallium, and selenium.

HEURISTIC ROUTING - The direction and organization of collection vehicles pick-up paths based on previous experience, and accepted rules of thumb. It is considered advantageous to computer (or deterministic) modeling in that heuristic routing is less time consuming and less costly.

HIGH GRADE PAPER - Letterhead, dry copy papers, miscellaneous business forms, stationery, typing paper, tablet sheets, and computer printout paper and cards.

HYDRAULIC CONTINUITY - In direct contact with a water bearing formation (aquifer) or body of water (pond or stream) with no flow interruptions.

INCINERATION - The controlled process by which solid, liquid, or gaseous combustible wastes are burned and changed into gases. The residue produced contains little or no combustible material.

INFECTIOUS WASTE -

(1) equipment, instruments, utensils, and fomites of a disposable nature from the rooms of patients who are suspected to have or have been diagnosed as having a communicable disease and must, therefore, be isolated as required by public health agencies;

(2) laboratory wastes, such as pathological specimens (for example: tissues, specimens of blood elements, excreta, and secretions obtained from patients or laboratory animals) and disposable fomites (any substance that may harbor or transmit pathogenic organisms) attendant thereto;

(3) surgical operating room (pathological) specimens and disposable fomites attendant thereto, and similar disposable materials from outpatient areas and emergency rooms.

KNIFE MILL - Size reduction apparatus where material is caught between fixed and rotating knives located on an armature. Size reduction is by shearing.

MAGNETIC SEPARATOR - A device that removes ferrous metals by means of magnets.

MODIFIED CIRCULAR REGISTER BURNER - One of five common suspension fired burners that can be easily adapted for use in burning of pulverized coal and fluff RDF in boilers.

OFFICE WASTES - Solid wastes generated in the building, room or series of rooms in which the affairs of a business, professional person, branch of government, etc., are carried on, but excluding wastes generated in cafeterias or snack bars, or other food preparation and sales activities in those buildings.

OPEN DUMP - A land site where solid waste is dumped on the surface of the soil and is not covered or buried.

PAPER HOGGER - A device which reduces paper (by tearing) into small pieces and expels them into other waste handling components.

PELLETIZER - A device which compacts refuse derived fuel (RDF) into small (pellet size) usable form.

PERCOLATE - To seep through a layer of porous material (layers of either earth or refuse). A liquid percolating through a layer of refuse material may become contaminated.

PERSONAL PROPERTY - Property of any kind or any interest therein, except real property and records of the Federal Government.

PROCESS CHEMICALS - The chemical(s) remaining after or produced by a given industrial process (chrome plating, aluminum etching).

PUSH PLATE - A large plate of thick steel located in a compactor truck whose function is to compact the waste materials deposited into it. Its function is analogous to the compaction ram in a stationary compactor.

PYROLYSIS - The chemical decomposition of a material by heat in the absence of oxygen.

QUEUE TIME - The time spent waiting in line or waiting to be serviced.

RABBLE ARMS - Short projections whose function is to break open bags or containers of refuse. They are usually located inside incineration equipment.

RFD - Refuse Derived Fuel - The burnable fuel which is the result of special processing of various types of solid wastes.

REAL PROPERTY - Lands, buildings, structures, utilities systems, improvements and appurtenances thereto. Includes equipment attached to and made part of buildings and structures (such as heating systems) but not movable equipment (such as plant equipment).

RECOVERABLE RESOURCES - Materials which retain useful physical or chemical properties after serving a specific purpose and can, therefore, be reused or recycled for the same or other purposes.

RECYCLING - The process by which waste materials are transformed into new products in such a manner that the original products may lose their identity.

RESIDENTIAL SOLID WASTE - The food wastes, rubbish, and trash resulting from the normal activities of households.

ROTARY-KILN INCINERATOR - A two-chamber incinerator whose primary chamber is a refractory lined cylinder which rotates about its centerline.

ROUTE ELEVATIONS - Any hills or grades encountered in a given collection route. Route elevations are (when possible) located near the beginning of a given collection route.

SANITARY LANDFILLING - An engineered method of disposing of solid waste on land in a manner that protects the environment, by spreading the waste in thin layers, compacting it to the smallest practical volume, and covering it with soil by the end of each working day.

SCAVENGING - The uncontrolled and unauthorized removal of materials at any point in the solid waste management system.

SCRAP - Discarded or rejected material or parts of material that result from manufacturing or fabricating operations and are suitable for reprocessing, but excluding paper, cardboard, newspaper and all high grade paper to be source separated in accordance with EPA solid waste guidelines.

SLUDGE - The accumulated semi-liquid suspension of settled solids deposited from wastewaters or other fluids in tanks or basins. It does not include solids or dissolved material in domestic sewage or other significant pollutants in water resources, such as silt, dissolved materials in irrigation return flows or other common water pollutants.

SOLID WASTE - Garbage, refuse, sludges, and other discarded solid materials, including solid waste materials resulting from industrial, commercial, and agricultural operations, and from community activities, but does not include solid or dissolved materials in domestic sewage or other significant pollutants in water resources, such as silt, dissolved or suspended solids in industrial wastewater effluents, dissolved materials in irrigation return flows or other common water pollutants.

SOLID WASTE MANAGEMENT - The purposeful, systematic control of the generation, storage, collection, transport, separation, processing, recycling, recovery, and disposal of solid wastes.

SOLID WASTE STORAGE CONTAINER - A receptacle used for the temporary storage of solid waste while awaiting collection.

STORAGE - The interim containment of solid waste, in an approved manner after generation and prior to collection for ultimate recovery or disposal.

SPECIALLY DESIGNATED LANDFILL - Landfill at which complete long term protection is provided for the quality of surface and subsurface waters from pesticides, pesticide containers, and pesticide-related wastes deposited therein, and against hazard to public health and the environment. Such facility complies with the Agency Guidelines for the Land Disposal of Solid Wastes as prescribed in 40 CFR Part 241.

STOKER - A mechanical device to feed solid fuel or solid waste to a furnace.

STREET WASTES - Materials picked up by manual or mechanical sweepings of alleys, streets and sidewalks, wastes from public waste receptacles and materials removed from catch basins.

TILT-FRAME VEHICLE - A vehicle whose chassis is designed to tilt downwards toward the rear thereby facilitating the loading or unloading of a large container such as a roll-off container.

TRANSFER STATION - A site at which solid wastes are concentrated from transport to a processing facility or land disposal site. A transfer station may be fixed or mobile.

TRIPLE RINSE - The flushing of containers three times, each time using a volume of the normal diluent equal to approximately ten percent of the container's capacity, and adding the rinse liquid to the spray mixture or disposing of it by a method prescribed for disposing of the pesticide.

TROMMEL (rotary screen) - An inclined, meshed cylinder that rotates on its axis and screens material placed in its upper end.

USABLE PROPERTY - Commercial and military type property other than scrap and post-consumer waste.

VECTOR - A carrier, usually an arthropod, that is capable of transmitting a pathogen from one organism to another.

VIBROELUTRIATOR - A dry classifier that is used to separate a light fraction from a heavy fraction. The material on a screen is vibrated while an air stream moves past the screen. The light fraction is removed by the air stream while the heavy fraction falls from the bottom of the moving air column.

WET CYCLONE SCRUBBER - A device which is designed for the removal of air suspended particulates.

WHITE GOODS - Discarded kitchen and other large, enameled appliances such as refrigerators and freezers.

APPENDIX A

LAWS, REGULATIONS AND DIRECTIVES PERTAINING TO SOLID WASTE MANAGEMENT

APPENDIX A

LAWS, REGULATIONS AND DIRECTIVES PERTAINING TO SOLID WASTE MANAGEMENT

A.1 SOLID WASTE DISPOSAL ACT, OCT. 20, 1965, AS AMENDED, 42 U.S.C. 3251 et. seq.

An Act to authorize a research and development program with respect to solid waste disposal, to provide financial assistance for the construction of solid waste disposal facilities, and for other purposes.

A.2 NATIONAL ENVIRONMENTAL POLICY ACT OF 1969, JANUARY 1, 1970, 42 U.S.C. 4321, 4331-4335, 4341-4347

An Act to establish a national policy for the environment, to provide for the establishment of a Council on Environmental Quality, and for other related purposes.

A.3 CODE OF FEDERAL REGULATIONS, TITLE 40, PROTECTION OF ENVIRONMENT, JANUARY 1, 1972

A.4 NATIONAL MATERIALS POLICY ACT OF 1970, OCTOBER 26, 1970, 42 U.S.C. 3251

An Act to enhance environmental quality and conserve materials by developing national materials policy to use present resources and technology more efficiently, to anticipate the future materials requirements of the nation, and to make recommendations of the supply, use, recovery, and disposal of materials.

A.5 OCCUPATIONAL SAFETY AND HEALTH ACT, DECEMBER 29, 1970, P.L. 91-596, 84 STAT. 1590

An Act to assure safe and healthful working conditions for working men and women by authorizing enforcement of the standards developed under the Act; by assisting and encouraging the states in their efforts to assure safe and healthful working conditions; by providing for research, information, education, and training in the field of occupational safety and health; and for other purposes.

A.6 MARINE PROTECTION, RESEARCH AND SANCTUARIES ACT OF 1972, 33 U.S.C. 1401, 1402, 1411-1421, 1441-1444, AS AMENDED BY P.L. 93-254, 22 MARCH 1974

An Act to regulate the transportation for dumping, and the dumping of materials into ocean waters, and for other purposes.

A.7 Executive Order 11752, December 17, 1973. Replaces E.O. 11507. It furthers the purpose and policies of the Clean Air Act; the Federal Water Pollution Control Act; the Solid Waste Disposal Act; the Noise Control Act; the Marine Protection, Research and Sanctuaries Act; the Federal Environmental Pesticide Control Act; and the National Environmental Policy Act.

A.8 GUIDELINES FOR FEDERAL AGENCIES UNDER THE NATIONAL ENVIRONMENTAL POLICY ACT, ISSUED BY THE COUNCIL ON ENVIRONMENTAL QUALITY, August 1, 1973

Guidelines to Federal departments, agencies, and establishments for preparing detailed environmental statements on proposals for legislation and other major Federal actions significantly affecting the quality of the human environment.

A.9 Federal Register, 39 F.R. 85, "Pesticides and Pesticide Containers -- Regulations for Acceptance and Recommended Procedures for Disposal and Storage."

A.10 Federal Register, 39 F.R. 200, "Pesticides -- EPS Proposal on Disposal and Storage."

A.11 Federal Register, 39 F.R. 174, "Federal Plant Pest Regulations; General; Plant Pest; Soil, Stone and Quarry Products; Garbage."

A.12 Code of Federal Regulations 40 CFR 240 "Guidelines for the Thermal Processing of Solid Wastes" of 14 August 1974.

A.13 Code of Federal Regulations 40 CFR 241 "Guidelines for the Land Disposal of Solid Wastes" of 14 August 1974.

A.14 Code of Federal Regulations 40 CFR 243 "Guidelines for the Storage and Collection of Residential, Commercial and Institutional Solid Waste" of 13 February 1976.

A.15 Code of Federal Regulations 40 CFR 244 "Solid Waste Management Guidelines for Beverage Containers" of 21 September 1976.

A.16 Code of Federal Regulations 40 CFR 245 "Resource Recovery Facilities Guidelines" of 21 September 1976.

A.17 Code of Federal Regulations 40 CFR 246 "Source Separation for Materials Recovery Guidelines" of 23 April 1976.

A.18 DOD Instruction 7310.1, 10 July 1970, Accounting and Reporting for Property Disposal and Proceeds for Sale of Disposable and Personal Property and Lumber and Timber Products.

A.19 DOD Directive 4165.60, 4 October 1976, Solid Waste Management - Collection, Disposal, Resource Recovery and Recycling Program.

APPENDIX B

TECHNICAL REQUIREMENTS AND GUIDELINES FOR SOLID WASTE MANAGEMENT CONTRACTS

APPENDIX B

TECHNICAL REQUIREMENTS AND GUIDELINES FOR SOLID WASTE MANAGEMENT CONTRACTS

B.1 INTRODUCTION. This appendix outlines the steps necessary for developing contracts for solid waste management services.

a. Advantages of such contract service include:

(1) The acquisition of land, buildings and equipment is not required.

(2) Much of the overhead and administrative costs are eliminated.

(3) The day-to-day operating problems of solid waste management are diminished.

b. Disadvantages of contract service include:

(1) High bid prices may result from limited contractor competition, especially in thinly populated areas.

(2) The contractor may cut corners and skimp on the quality of service to increase his profit margin. Therefore, contracts should provide for protection penalties.

(3) To be attractive to private enterprise, the term of the contract must cover a sufficient period for the contractor to amortize his capital expenditures. However, long term contracts often result in contractor complacency and poor performance.

B.2 TYPES OF CONTRACT SERVICES. Contract services may be used in parallel operations and/or in functional area operations. In a parallel operation the contractor provides a duplicate solid waste management service for specific wastes or certain locations within an installation. This service may be necessary for those problem wastes which cannot be managed safely in-house. However, the parallel method is not normally cost effective. In functional area services -- the most common type -- a contractor provides one or more of the services of storage, collection, transfer, or disposal. The installation provides the remaining services. In general, the more functions provided by the contractor, the greater the economic advantages realized.

B.3 COST ANALYSIS. The decision to use contract services should be based on economic considerations of contract versus in-house operations. From applicable methods, select the

disposal method which is lowest in cost (AF should refer to AFM 91-11). Consider as conclusive an indicated cost difference of ten percent or more below the lowest estimated cost. Complete records should be kept on the overall operation to facilitate planning and cost control. Where cost differences are not conclusive, favor the proposal which includes recycling or resource recovery as the preferred method of disposal as opposed to incineration or landfill.

B.3.1 Municipal Contracts. Contracts with municipalities shall be favored where the cost is less than that of building and operating government facilities. If cooperation allows enlarging the scale of the operation, municipal disposal facilities can be made more efficient and environmentally more acceptable.

B.3.2 Consolidated Military Operations. Where a number of Department of Defense installations are concentrated in a geographic area, and the use of municipal operations is not feasible, serious consideration shall be given to establishing a consolidated Department of Defense facility. Consolidation allows for design and operation of a more sophisticated, economical, and safe facility. A centralized control authority should be established to develop management and operational guidelines for the facility.

B.4 CONTRACT DEVELOPMENT GUIDELINES. The following should be considered in solid waste management contracts:

a. Economics. Near urban areas, economics often favor contractor collection and disposal of wastes. Preparation of the contract must be in accordance with the procedures given in appropriate procurement regulations for each service, and the Armed Services Procurement Regulation (ASPR).

b. Equipment and Work Force. On all but the smallest installations, a contractor would require additional equipment and work force to meet contractual requirements. These represent a high initial cost which must be recovered by the contractor. Even considering resale of equipment, a one-year contract at a medium-sized base represents a high initial investment and low equipment utilization which will result in increased costs that the contractor must be permitted to recover. Two methods which have been successfully used to overcome this problem are:

(1) A regional contract for all government installations in a particular area.

(2) Use of a multi-year rather than a single-year service contract, which will allow recovery of investment costs over a longer period of time.

At some locations a combination of both methods has been used. The multi-year method requires prior approval from the General Services Administration via the chain of command.

c. Contract Contents. The following general considerations shall apply to contract contents:

(1) Guide Specifications. Guide specifications provided in paragraph B.5 have been written in broad terms to cover the variety of situations found at Department of Defense installations. Therefore, they require modification to meet local needs.

(2) Drawings. Drawings provided as part of the contract documents shall be complete and sufficiently detailed for planning routes and schedules.

(3) Contract Requirements. The contract should provide for only the level of work required to maintain predetermined sanitary conditions. The collection frequencies discussed in Chapter 3 should be used, unless justified otherwise. Unnecessary pickups and long routes result in extra costs or charges and should be avoided. Any items not specified entirely or left to the option of the Department of Defense and contractor personnel can result in delays and added costs.

(4) Economic Considerations. When work is performed under contract, the economic desirability of the Department of Defense installation supplying the containers, equipment, or disposal facilities should be addressed. Such equipment or items should be furnished to the contractor when it is cost effective. Heavy equipment, such as bulldozers, cranes or collection vehicles, would only be furnished for the contractor if exceptionally large savings are expected and realized.

(5) Collection and Disposal Costs. The cost of waste collection and disposal is a direct reflection of collection frequency, length of haul, number of stops, and availability of disposal facilities.

B.5 GENERAL CONTRACT SPECIFICATIONS.

a. Scope. These specifications and accompanying drawings provide for the collection and disposal of refuse in a complete and workmanlike manner for a period of ___ years after the contract. The contractor will furnish all plant supervision, labor, material and equipment, except government-furnished items.

b. Description of Work. The work covered by these specifications consists of furnishing all necessary equipment, labor, supervision, and materials for performing all operations necessary for the collection, transportation and disposal of all refuse specified in this contract, complete and in accordance with these specifications and subject to the terms and conditions of the contract. Drawings (or plans) numbered ___ through ___ show the work areas and details, where applicable, of the work to be accomplished.

c. Location. This contract is to be performed at (Installation) in areas shown on the plot plan included in the above drawings.

d. Performance of Work. These specifications and the accompanying plans herein state and show the work to be performed under this contract. Refuse collection and disposal will be conducted in conformity with applicable regulations to contribute maximum satisfaction to householders and responsible base officers. Collections will be made with minimum divergence from schedules, once established, and with minimum disturbance and maximum protection of property.

e. Supervision. The contractor will provide competent supervision at all times when work is in progress. The contractor is responsible for scheduling and coordinating various trade activities. He is also responsible for assuring that all work accomplished and materials used are in accordance with the plans and specifications.

f. Government-Furnished Equipment. (Use where applicable.)

(1) Items to Be Furnished. The following items of government-furnished equipment will be made available for the contractor's use during the period of this contract. (List items to be furnished.)

(2) Inspection and Receipt Required. The contractor will sign a receipt for each item of equipment. He is responsible to inspect each item at the time of acceptance and to make notation of discrepancies on the receipt; otherwise, the contractor's signature on the receipt will indicate that the equipment is in a fully acceptable condition. Within five days after completing the work under this contract, the contractor will return the equipment to the installation in a condition equivalent to that at the time of acceptance, except for normal wear and usage.

(3) The contractor will supply all fuel, lubricants, and spare parts, and provide repair and maintenance necessary

to keep equipment in condition acceptable to the contracting officer. Repair and maintenance will be performed only by qualified mechanics of journeyman level, except for day-to-day operator-type maintenance, which may be performed by the operators. Fuel, lubricants, and spare parts used on equipment will meet the standards established by the manufacturer of the equipment. No modifications, changes, or substitution of parts will be permitted without written approval of the contracting officer.

(4) Qualified Operators Required. Only qualified operators, as determined by the installation contracting officer, will be permitted to operate government-furnished equipment. When necessary, operator demonstrations of proficiency and training will be performed under the supervision of the contracting officer's representative. The contractor will provide a qualified instructor when deemed necessary by the contracting officer.

(5) Substitute Equipment. The contractor will provide substitute equipment, if necessary, to maintain schedules in the event government-furnished equipment is out of service due to breakdown or other causes.

g. Contractor-Furnished Equipment.

(1) Furnish all Necessary Equipment. The contractor will provide all necessary equipment (except government-furnished equipment) required for performing the contract.

(2) Safety and Noise Prevention. All of the contractor's equipment will be equipped with proper safety and noise-limiting devices and will be in safe operating condition.

(3) Qualified Operators Required. Only qualified operators will be permitted to operate equipment. When necessary, operator training will be performed in an area approved by the contracting officer.

h. Government-Furnished Materials and Supplies. (Use as applicable.)

(1) Items to Be Furnished. The following materials and supplies to accomplish this contract will be furnished to the contractor at no cost. (List materials and supplies.)

(2) Requests for Materials and Supplies. The contractor will notify the contracting officer 48 hours in advance of his requirement for materials and supplies. Items will be picked up by the contractor at (give location, building number, or area).

(3) Lost or Damaged Items. Any items (as mentioned in the preceding paragraph) which are lost or damaged in service will be replaced by the contractor at contractor expense.

i. Applicable Publications, Laws, and Regulations. Unless specifically exempted by these specifications and drawings, all work accomplished under this contract will conform to the requirements of all applicable Federal, state, and local regulations pertaining to environmental protection and occupational safety and health, and to the procedures and safety requirements at each installation.

j. Inspection. All work performed, the methods and manner of performance, all areas assigned for use by the contractor, and all equipment, materials, and supplies used for the work will be subject to inspection at any and all times by the contracting officer's authorized representatives. All notices of unsatisfactory conditions or services will be issued in writing to the contractor by the installation contracting officer. The contracting officer will have access at any and all times to the contractor's equipment, materials, supplies, assigned areas and sites of operations for inspection purposes.

k. Collection of Waste.

(1) Points of Collections. The points of collection (collection stations and units) for pickup of waste by the contractor will be as shown on the accompanying plans. Any increase or decrease in the number of points that exceed (number) will be cause for adjusting contract cost. The government will designate collection stations, provide numbered markers as required for identification with the plans and, where necessary, provide pads, stands, or other suitable structures for assemblying and storing wastes for pickup by the contractor.

(2) Frequency of Collections. The frequency of collections will be as follows:

Locations	Collections per Week
(list locations)	(indicate number)

(3) Schedule of Operation. After the contract has been awarded and before work begins, the contractor will establish a schedule of operations that he proposes to conduct. This schedule will govern the days, and time of day, collections will be made. The schedule will be subject to change, provided the proposed modification contributes toward a more satisfactory service. In addition, the schedule and modification thereof will meet the contracting officer's approval.

(4) Additional Equipment or Work Time Required. The contractor will prosecute the collection and disposal operations in order to provide minimum delay or divergence from the schedule.

(5) Abnormal Quantities of Waste. Excess waste or wastes beyond the normal daily quantity resulting from holidays or recognized customs shall be disposed of by the contractor at no additional cost to the government. The contractor will employ additional equipment or make additional trips, if necessary, to adequately dispose of extra waste. This should be accomplished with minimum interference of regular collection schedules.

(6) Hours of Operation. The contractor will confine his operations to daylight hours commencing not earlier than (time) and continuing not later than (time), unless otherwise approved by the contracting officer. When unusual conditions require deviations the contractor will, upon approval of the contracting officer, perform his services at no additional cost to the government.

l. Transportation.

(1) All waste will be transported from the collection point to the disposal area in closed packer-type bodies mounted on suitable trucks approved for hauling waste. Transportation equipment will be clean, attractively painted and in acceptable sanitary condition. Transportation equipment will not be overloaded, and all doors or other openings in the body of the vehicle will be closed during transit.

m. Disposal. (Use of government-operated disposal areas or revise as necessary for contract operation.) The disposal area is located as shown on the plans and is operated by the government on the sanitary fill system. Insofar as practicable, and on approval of the area supervisor, a trench into which waste may be unloaded will be provided for the sole use of the contractor at his request. The government will supervise the disposal areas, and the contractor will exercise such cooperation as may be necessary to obtain the maximum benefit the facilities might provide for all parties using them.

n. Containers.

(1) Containers may be standard galvanized garbage cans with tight fitting lids; approved paper bag collection systems incorporating stands/hangers and lids; or larger approved metal containers having a capacity of 3.06 to 6.12 cubic meters (four to eight cubic yards). They will be handled, cleaned, and maintained as provided herein.

(2) Emptying Containers. Do not strike containers against the collection vehicle to loosen and remove contents. Return them to their proper station in an upright position with lids securely in place after emptying. Collection of a group of containers from collection points and then returning them later in the day will not be permitted.

(3) Unconfined Excess Waste. Each collection station and adjacent area will be left free of loose waste at the end of each regularly scheduled collection. Waste placed at the collection station in sacks, cartons, cans, boxes, or uncontained, will be removed by the contractor in the same manner and at the same time as if it were placed in the regularly provided containers.

(4) Spilled Waste. Each vehicle will carry a broom, yard rake, and scoop to facilitate immediate pickup of spilled wastes.

(5) Unserviceable Containers. Containers which, in the opinion of the contracting officer become unserviceable, will be replaced with new or serviceable units and returned to the can cleaning and storage area. Unserviceable cans will be segregated from serviceable cans by the contractor. (Use for government-furnished containers.) The segregated cans will be inspected daily by the contracting officer's representative who shall designate the cans as condemned, irreparable, reparable, or serviceable.

(6) Disposition. (Use for government-furnished containers.) Containers which have been inspected and classified as "condemned irreparable" will be cleaned thoroughly and disposed of as directed. Cans designated as "serviceable" shall be put back into service. The contractor will deliver "reparable" cans to an appropriate location for repair by the government. After cans have been repaired they will be picked up by the contractor and returned to service.

(7) Cleaning. The contractor will thoroughly clean and wash all containers and lids as specified in the following, or as often as necessary to maintain sanitary conditions. All containers used in housing and barrack areas for storing small quantities of putrescible wastes will be washed and sprayed at least once per month. Containers used to store dry wastes exclusively shall be washed as often as necessary to maintain good sanitary conditions as required by the inspector.

(8) Spraying. Immediately after cleaning and washing each vehicle or container and its lid, each will be sprayed inside and out with an approved disinfectant solution. The contractor will be responsible for all activities incident to

storage, exchange, segregation, and washing and spraying of containers, lids and cans used in collecting wastes.

o. Vehicles. Only trucks specially designed for collecting waste and of a type approved by the contracting officer will be used. Collection vehicles will be kept closed when moving or when not actually engaged in collecting wastes. Vehicles must be operated in accordance with base rules and regulations while in the base area. The cost of maintenance and repair of contractor-owned and government-owned vehicles assigned or loaned to the contractor will be borne by the contractor. Vehicles to be furnished by the contractor are as follows:

(1) Vehicles Required. As a minimum requirement, the contractor will have the following vehicles, or their equivalent as approved by the contracting officer, available for service at all times during this contract.

Type of Vehicle	Number	Capacity
(indicate vehicle types)	(list numbers)	(list capacities)

(2) Maintenance, Operation and Repair of Vehicles. The contractor will maintain all vehicular equipment used under this contract in good repair and in safe, clean, and well painted condition. The contractor's name will be painted or otherwise displayed prominently on each contractor-owned vehicle.

p. Sanitation Requirements. All phases of waste collection and disposal service will be conducted to comply with current applicable sanitary regulations, and will meet the approval of the base surgeon or his designated representative.

(1) Contractor's Responsibility. The contractor's responsibility will include the following minimum requirements:

(a) Trucks, including the bodies, used for hauling waste will be washed and sprayed not less than once each week, or more often if necessary, to maintain a clean condition and neat appearance, as directed.

(b) All metal containers will be cleaned not less than once every four months and more often if required and so directed.

(c) All contractor's equipment will be sprayed with approved insecticides and/or disinfectants as required for insect and/or sanitary control.

(d) Spillage at collection sites will be recovered before the collecting vehicle moves from the site.

(e) Spillage en route will be recovered immediately.

(f) Disposal area assigned to or used by the contractor will be maintained in a sanitary condition.

(g) The contractor shall police all collection sites within the immediate areas of the containers at the time pickups of wastes are made. All paper, boxes, cans, bottles, rags, garbage or other waste within the immediate area will be recovered and hauled away for disposal.

(2) Cleaning Methods. Steam cleaning, spraying, and sanitation methods will be at the discretion of the contractor so long as results are approved.

(a) If the contractor elects to steam clean containers at the collection site, he will provide equipment such as tight truck, trailer bed or approved metal-lined box on which the cleaning can be accomplished. This equipment will retain all washings, residues and detergents and will be dumped and/or cleaned only at a disposal site. No washing or cleaning of containers or equipment will be permitted in housing areas or when washings, residues, or detergent solution may be deposited on natural ground, grassed, or paved surfaces.

(b) Washing and cleaning containers at the disposal area will require providing additional containers to replace those being cleaned so that no unit or collection station will be without a waste container for more than one hour.

(c) All waste containers will be clean, dry, and free of any quantity of detergent solution when replaced for use at a collection site.

(d) Steam Rack. At the end of each day's operation, the contractor will leave the steam rack drains and can storage area clean and free of debris.

(3) Equipment. The contractor will provide, operate, and maintain equipment in a sanitary condition and in a satisfactory and efficient manner. Mobile and steam cleaning equipment will be kept in safe operating condition and in neat appearance at all times. A heavy duty, high-pressure, multiple-hose, detergent-type steam cleaning unit of adequate size and capacity to perform the required work will be provided for use in the work covered by the contract.

(Optional -- revise according to local conditions.) The government will provide water by pipe connection or delivery to the contractor's tank at the site of the steam cleaner in the disposal area.

(4) Sanitation Supplies. The contractor will furnish all necessary sanitary supplies incidental to performing the contract and will maintain an adequate supply on hand at all times. This will include, but not be limited to, insecticides and pressure type applicators, brushes, detergent, disinfectants, and other necessary equipment and materials.

q. Sanitary Landfill. (Use for the contractor's operation on government-owned property or revise as necessary for other conditions.) All non-segregated waste will be disposed of in the sanitary landfill. The contractor will perform all tasks necessary for operating the landfill and provide all equipment determined necessary by the contracting officer.

(1) Operation. The "trench" or "area" method will be employed in the sanitary landfill operations. All waste will be thoroughly spread, compacted and covered with dirt material to a depth of not less than six inches at the end of each day's operation. The face of the fill will be maintained on a grade of approximately 30 degrees. The finished grade will conform to existing terrain, unless otherwise directed by the contracting officer. A sanitary fill operator will be on duty during normal base working hours five days per week, Monday through Friday (optional), and from (time) to (time) Saturday and Sunday.

(2) Where solid waste is disposed of off-base by contract, the contractor will dispose of it in a manner which complies with all Federal, local, and state laws and ordnances.

(3) Dumping Refuse. All refuse for disposal will be deposited in the disposal trench. Material blowing, dumped, or spilled on the surface adjacent to the trench will be shoveled, pushed, or otherwise collected and deposited in the trench. This should be done before the transporting equipment leaves the vicinity.

(4) Movable Bumper Blocks. The contractor will provide movable bumper blocks required for his operations at the sanitary landfill, and will be responsible for their use and maintenance.

(5) Covering Refuse. Covering will be as directed by the inspector, and will be accomplished by the contractor's personnel and equipment at no additional cost to the government.

(6) Conditions in Disposal Area. The contractor will be responsible for exercising judgment necessary for safety in his operations at the disposal area. No liability will be assessed the government for conditions of ground surface, unstable ground, location of trenches, or any other condition which the contractor may encounter in performing his work.

(7) Wind Fence. A portable wind fence approved by the contracting officer will be installed and maintained by the contractor at his expense. The fence will be of sufficient height to prevent the escape of wind-blown litter and of sufficient length to extend the full length of the open fill. The fence will be installed on the side of the fill in the direction toward which prevailing winds blow. The fence will be relocated as necessary to afford full protection for the open fill. Upon erection and installation, title to the wind fence will pass to the government.

r. Salvage Operations. The contractor will not salvage any material unless designated salvageable materials by the contracting officer's representative. If the contractor or his employees discover materials which they believe to have a salvage value, the contracting officer will be notified immediately by the contractor and requested to determine the disposition of the item(s).

s. Assigned Area. An area of convenient size and location will be designated for the contractor's use. All contractor's equipment, when not in use, will be kept within the assigned area. The area will be kept clean, with equipment neatly parked or stacked, and the facility and the installations and operation will conform to current applicable fire, safety, and sanitary regulations. The contractor is responsible for the security of the assigned area and the equipment kept therein.

t. Personnel.

(1) The contractor will personally supervise the work or have a competent foreman or superintendent, satisfactory to the contracting officer, supervise the work at all times. He will have sufficient training and experience in sanitation to recognize unsanitary conditions and take necessary corrective action. He will be available at all times during regular working hours to accompany representatives of the contracting officer on inspection tours.

(2) Operators and Laborers. In addition to a superintendent or foreman, a sufficient number of personnel will be employed to properly accomplish all work in accordance with these specifications.

(3) Identification of Employees. The contractor will be responsible for furnishing to each employee, and for requiring each employee engaged on the work to display, such identification as approved and directed by the contracting officer. All prescribed identification will be returned to the contracting officer for cancellation immediately upon release of an employee. When required by the contracting officer, the contractor will obtain and submit fingerprints of all persons employed or to be employed on the project.

(4) Releasing an Employee. The contracting officer may, in writing, require the contractor to release any employee deemed incompetent, careless, insubordinate, or otherwise objectionable, or whose continuous employment is deemed, by the contracting officer, to be contrary to the public interest.

u. Reports. Reports shall be made in accordance with local requirements.

APPENDIX C

LIST OF MATERIALS WHICH REQUIRE SPECIAL PROCESSING PRIOR TO TRANSFER TO THE DEFENSE PROPERTY DISPOSAL SERVICE

APPENDIX C

LIST OF MATERIALS WHICH REQUIRE SPECIAL PROCESSING PRIOR TO TRANSFER TO THE DEFENSE PROPERTY DISPOSAL SERVICE

Some waste materials, because of their peculiar nature, their potential influence on public health, safety or security, or their potential influence on private industry, must be disposed of in other than a normal fashion. Chapter VI of the Defense Disposal Manual, DOD 4160.21-M, June 1973, describes these materials, explains their peculiarities, and furnishes guidance for their disposal. These materials include:

Agricultural Commodities, Foods Processed therefrom, and Cotton and Woolen Goods
AID Requirements
Aircraft
Aluminum Scrap (Wrecked Aircraft)
Aluminum Skids
Automatic Data Processing Equipment (ADPE)

Base Closure Assets
Bedding and Upholstered Furniture

Cable Reels
Chapel and Chaplains' Equipment
Classified Material
Clothing, Distinctive and Impregnated
Commercial Recovery of Chemical Materials
Compressed Gas Cylinders
Confiscated Property
Containers
Contractor Inventory
Cryptologic Material
Copper-Based Alloy Ammunition Scrap

Dangerous Property
Decorations, Badges, Service Awards, Medals, Ribbons, Distinctive Buttons and Other Insignia
Demilitarization or Multilation
Dental Scrap
Department of Defense Inspection Approval Stamps and Devices
Desalting Kits
Disposition of Animals
Distinctive Markings
Distress Signalling Devices
Drugs, Biologicals and Reagents (Including Controlled Substances)

Electron Tubes
Exchange/Sale Property
Explosive and Acid-Contaminated Property
Explosive or Dangerous Gases

Film
Fire Extinguisher, Carbon Tetrachloride (CTC)
Fired Cartridge Cases
Flags
Fluorescent Lamps
Food Waste and Refuse
Foreign Equity Property
Forms (Excess Government-Wide Standard Forms -- Bulk Supplies -- Except Obsolete Forms)
Franked Envelopes
Fuel Cells or Tanks

Gas Masks and Canisters

Hazardous Material
Helmets
High Temperature and Critical Alloy Scrap
Hypodermic Needles and Syringes

Industrial Diamonds
Industrial Plant Equipment (IPE)
Intangible Property

Life Rafts and Life Preservers
Liquid Rocket Propellants
Lost, Abandoned, or Unclaimed Privately Owned Personal Property
Lumber and Boxes

Magnetic Tape
Material for Fire Fighting Practice
Metalworking Machinery

Nonappropriated Fund Property
Nuclear Weapons Material

Oil
Oxygen Masks

Pallets
Peculiar FIIN 279-6865
Personnel Parachutes
Pesticides and Herbicides
Pneumatic Fiberglass Flasks
Postal Equipment
Precious Metal Scrap

Prepackaged Meals, Packets, and Rations
Prescription Safety Goggles
Printing Equipment

Radioactive Material
Radiosonde AN/AMT-6
Recovery of Metal from Target Practice Ranges
Recovery of Silver from Used Hypo Solution
Red Cross Property
Redistributable MAP Property
Reserved Materials

Safes and Related Equipment
Shelf-Life Property
Ships, Boats and Service Craft
Ship's Seals, Wax Seals, and Hand Press Seals
Silver and Silver-Bearing Scrap
Silver Service Presentations and Like Items
Small Arms
Sodium Filled Valves
Spark Plugs and Magneto Breaker Assemblies Containing Platinum
Stills
Storage Batteries
Strategic and Critical Materials
Submarine Escape Appliances
Surplus Food Material
Survival and Protective Equipment

Tax-Free Products
Test Sets, Psychodiagnostic (FSC 6515)
Textiles
Thermal Batteries
Timber
Tobacco Products
Toxicological, Biological, and Radiological Agents or Materials
Trophies and Relics
Typewriters

Vehicles

Waste Paper

APPENDIX D

ORGANIZATIONS PROVIDING ASSISTANCE FOR RECYCLING AND RESOURCE RECOVERY PROGRAMS

APPENDIX D

ORGANIZATIONS PROVIDING ASSISTANCE FOR RECYCLING AND RESOURCE RECOVERY PROGRAMS

D.1 There are numerous government, industrial and citizen organizations that can help in a recycle program. The Environmental Protection Agency (EPA) is the governmental contact point for all solid waste matters. EPA Regional Affairs Offices can assist in developing local programs. The following is a list of some of the organizations that can provide information for recycling programs:

D.1.1 Federal Agencies:

Bureau of Mines
Publications Distribution Branch
4800 Forbes Avenue
Pittsburgh, PA 15213

National Technical Information Service
Document Sales Department
5285 Port Royal Road
Springfield, VA 22161

U.S. Environmental Protection Agency
Office of Solid Waste Management Programs
1835 K Street, N.W.
Washington, DC 20460

D.1.2 Department of Defense:

Facilities Engineering
Office of the Chief of Engineers
Department of the Army
Washington, DC 20341

Naval Facilities Engineering Command HQ
Code 1042B
200 Stovall Street
Alexandria, VA 22332

Headquarters, United States Air Force
AF/PREVP
Environmental Policy and Assessment Branch
Washington, DC 20330

Command Officer (Code 2512)
Naval Construction Battalion Center
Port Hueneme, CA 93043

Commanding Officer, Northern Division
Naval Facilities Engineering Command
Philadelphia, PA 19112

Command Officer, Chesapeake Division
Naval Facilities Engineering Command
Building 57, Washington Navy Yard
Washington, DC 20374

Commander, Atlantic Division
Naval Facilities Engineering Command
Norfolk, VA 23511

Commanding Officer, Southern Division
Naval Facilities Engineering Command
P.O. Box 10068
Charleston, SC 29411

Commanding Officer, Western Division
Naval Facilities Engineering Command
P.O. Box 727
San Bruno, CA 94066

Commander, Pacific Division
Naval Facilities Engineering Command
FPO San Francisco 96610

D.1.3 Trade Associations and Industrial Sources:

Aluminum Association
750 Third Avenue
New York, NY 10017

American Can Company
Americology Program
1660 L Street, N.W.
Suite 1007
Washington, DC 20036

American Iron and Steel Institute
1000 16th Street, N.W.
Washington, DC 20036

American Paper Institute
260 Madison Avenue
New York, NY 10016

American Petroleum Institute
Environmental Affairs
1801 K Street, N.W.
Washington, DC 20006

American Public Works Association
1313 East 60th Street
Chicago, IL 60637

Can Manufacturers Institute
1625 Massachusetts Avenue, N.W.
Washington, DC 20036

Continental Can Company
633 Third Avenue
New York, NY 10017

Glass Container Manufacturers Institute, Inc.
330 Madison Avenue
New York, NY 10017

International Paper Company
220 East 42nd Street
New York, NY 10017

Institute of Scrap Iron and Steel
1729 H Street, N.W.
Washington, DC 30006

Keep America Beautiful
99 Park Avenue
New York, NY 10017

National Association of Recycling Industries
330 Madison Avenue
New York, NY 10017

National Can Corporation
Midway Center
5959 South Cicero Avenue
Chicago, IL 60638

National Canners Association
1130 20th Street, N.W.
Washington, DC 20036

National Center for Resource Recovery, Inc.
1211 Connecticut Avenue, N.W.
Suite 800
Washington, DC 20336

National Soft Drink Association
1100 16th Street, N.W.
Washington, DC 20336

National Solid Waste Management Association
Technical Director
1730 Rhode Island Avenue, N.W.
Washington, DC 20036

National Tire Dealers and Retreaders Association, Inc.
1343 L Street, N.W.
Washington, DC 20005

Society of the Plastics Industry, Inc.
250 Park Avenue
New York, NY 10017

U.S. Brewers Association, Inc.
1750 K Street, N.W.
Washington, DC 20006

APPENDIX E

PARTIAL LIST OF DEPARTMENT OF DEFENSE ACTIVITIES PROVIDING ASSISTANCE WITH HAZARDOUS MATERIALS

APPENDIX E

PARTIAL LIST OF DEPARTMENT OF DEFENSE ACTIVITIES PROVIDING ASSISTANCE WITH HAZARDOUS MATERIALS

Derived from various sources is the following list of organizations which can provide assistance in defining and solving hazardous waste handling, processing and disposal problems. Included is a brief summary outlining the limits of assistance provided by each activity.

Activity	Type of Assistance
Naval Public Works Center Norfolk, VA	Provides information on industrial and plating wastes.
Naval Air Development Center Warminster, PA	Provides hazardous waste information.
Naval Air Rework Facility Naval Air Station Jacksonville, FL	Provides information to other agencies.
Naval Air Station Alameda, CA	Provides information on hazardous material handling, and suggestion of private contractors in the Alameda area.
Public Works Center Naval Air Station Pensacola, FL	Provides disposal information on plating wastes, acids, chromates, oils, greases, and photographic wastes.
Dalgren Laboratory Dalgren, VA	Provides information, and accepts very limited amounts of hazardous wastes for disposition (excluding heavy metals and carcinogens).
Navy Environmental Health Center 3333 Vine Street Cincinnati, OH	Provides information and guidance on handling and disposal of almost any toxic/hazardous material.
Naval Air Station North Island San Diego, CA	Provides hazardous material information and will accept for disposal some materials.
Cameron Station Alexandria, VA	Provides pertinent publications upon request.

Activity	Type of Assistance
U.S. Army Environmental Hygiene Agency Aberdeen Proving Ground, MD	Provides consultations, supportive services and investigations in support of the Army's Health and Environmental Programs.
U.S. Army Environmental Hygiene Agency Solid Waste Management Division Aberdeen Proving Ground, MD	Operates a hazardous waste computer retrieval system similar in content to the Navy's "Consolidated Hazardous Items List" (CHIL).
Marine Corps Air Station Cherry Point, NC	Industrial waste treatment plant.
National Technical Information Service 5285 Port Royal Road Springfield, VA	Provides literature search for pertinent publications.
Office of Hazardous Materials U.S. Department of Transportation Washington, DC	Provides information concerning regulations governing transportation of hazardous materials.
U.S. Environmental Protection Agency Washington, DC	Provides a listing of hazardous waste facilities in the United States.
Navy Environmental Support Office, AV 360-4062 Port Hueneme, CA 93043	Provides information on handling and disposal of hazardous wastes. Also provides "Hazardous Waste Disposal Guide, NESO 20.2-011."
Northern Division Naval Facilities Engineering Command Philadelphia, PA 19112	Provides information on handling and disposal of hazardous wastes.
Chesapeake Division Naval Facilities Engineering Command Washington, DC 20374	Provides information on handling and disposal of hazardous wastes.
Atlantic Division Naval Facilities Engineering Command Norfolk, VA 23511	Provides information on handling and disposal of hazardous wastes.

Activity	Type of Assistance
Southern Division Naval Facilities Engineering Command Charleston, SC 29411	Provides information on handling and disposal of hazardous wastes.
Western Division Naval Facilities Engineering Command San Bruno, CA 94066	Provides information on handling and disposal of hazardous wastes.
Pacific Division Naval Facilities Engineering Command Pearl Harbor, HI	Provides information on handling and disposal of hazardous wastes.

APPENDIX F

ALTERNATIVE SOLID WASTE SURVEY PLANS

APPENDIX F

ALTERNATIVE SOLID WASTE SURVEY PLANS

F.1. INTRODUCTION. The following plans are excerpts from the Logistics Management Institute Report, Measurement and Description of the DOD Solid Waste Problem, Project 8 (Interim Report) of March 1976, selected to familiarize the users of this document with four methods of accomplishing a solid waste survey: Plan A, Low Cost/Low Precision-No Measurement Study; Plan B, Low Cost/Low Precision Survey; Plan C, Medium Cost/Medium Precision Survey; and Plan D, High Cost/High Precision Survey.

Plan A uses information readily available on the installation or from published sources. It requires no field measurements and a minimum of expense. Plan B encompasses Plan A as a reference base, but requires measurements on each of 15 collection days of solid waste weights, and visual estimates of the composition and container load-volume percentages. It is a low cost plan because it utilizes collection personnel to record the data. Plan C also encompasses Plan A. A sampling schedule, which identifies individual or groups of similar waste generating facilities, is constructed and implemented by a survey team for 20 collection-day measurements. Composition is determined by hand segregation and weight measurements. Plan C provides a higher level of waste measurement and is more expensive to conduct than Plan B. Plan D is similar to Plan C but the survey is conducted over four 20-day measurement periods with each 20-day measurement period taking place in a different quarter of the year.

F.2. LOW COST/LOW PRECISION-NO MEASUREMENT STUDY (PLAN A).

a. Time Series Analysis, Step 1. Collect recorded monthly weight, container trips, or container load volumes of the solid waste disposed in the landfill or incinerator, plus the weight of scrap materials turned into the Defense Property Disposal Officer (DPDO), for the three most recent fiscal years. Determine if the data constitute a time series; if so, determine the secular trend and develop the seasonal index. Convert all container trip data to tons using a density factor of 82 pounds per cubic yard. If the loose-cubic-yard volume has already been adjusted for percent load (i.e., container 100, 75, 50, or 25 percent filled), convert to tons using a density factor of 180 pounds per cubic yard. Use the calculated trend and seasonal index of the time series analysis to forecast the monthly and yearly total of the solid waste tonnage for the current year. Use the trend to forecast the yearly totals for the next four fiscal years. Record, by month, the total weight and type of solid waste recovered through sales by the DPDO or volunteer efforts.

b. Emission Variable Analysis.

(1) Step 2. Itemize the major solid waste generating facilities (or groups of facilities) and collect population, square footage and other pertinent emission variable data. Construct similar tables for each year of interest. For future years the estimates of the variables are restricted to the major categories of Family Housing, Troop Support, Industrial Activities, and Total Installation.

(2) Step 3. Using the average emission factor values of Table F-1 and the models of Table F-2, calculate estimates of the solid waste generated.

(3) Step 4. Compare the total solid waste weights calculated in Steps 1 and 3. If there is wide variation between the estimated weights for the most recent year of recorded data, adjust the emission factor estimates of Step 3 to close agreement with the weights determined by Step 1. The Step 1 weight is based upon volume measurements of the particular installation, while the emission factor estimates were derived from composite measurements of other installations. Once adjusted, the Step 3 estimates, which reflect the installation's activity levels, should be used to forecast the solid waste of future years.

(4) Step 5. The weights derived through Step 4 can be converted to component values by multiplying the estimated activity weights by the pertinent composition percentages of Table F-3.

F.3. LOW COST/LOW PRECISION SURVEY (PLAN B). Plan B consists of the "no measurement" study of Plan A combined with a limited (15-day) waste source survey. Approximately 90 percent of the staffing will be composed of supervisory personnel (GS-11 or equivalent). The 15 days of weight measurements will provide a quarterly estimate of the mean weight with a precision close to plus or minus 10 percent of the mean with a confidence level of 0.8. It will not be possible to provide a confidence level on the composition estimates as they rely on visual approximations.

a. No-Measurement Analysis, Step 1. Complete the five-step analysis of Plan A. The estimates of the aggregate solid waste weight and component weights will be used as a reference base to afford comparisons with the measured (weighed) values.

b. Limited Solid Waste Survey.

(1) Step 2. The survey supervisor develops a system for identifying the collection vehicles and the solid

TABLE F-1

Military Solid Waste Quantity Emission Factors by Facility Type

Code	Waste Source	Pounds/1000 sq. ft./day USN	Pounds/1000 sq. ft./day USAF	Pounds/employee-(resident)/day USN	Pounds/employee-(resident)/day USAF	Other USN	Other USAF	
	Type 0 Waste							
610	Office	7.3	10	1.5	1.5			
	Office	17.8	7.4		1.6			
	Business	39.4	8	11.1	4.3	(680	20	Pounds/$1000 sales/day)
740	Service Station		63					
171	Classroom	3.3	8	0.8	3.7			
	Classroom	3.3	3.3					
440	Storehouse	23.7	5	8.6	12.0			
	Storehouse	10						
440	Warehouse-Transfer		3.3					
	Transfer & Pack		31					
210	Maintenance	13.2	2	5.4	1.6			
	Maintenance	15.6						
	Jet Engine Shop		4.8					
	Electronic Shop		8.2		1.7			
	Machine Shop		7.4		2.4			
	Aircraft		17.5					
220	Production	22						
	Munitions - General		21		4.4			
740	Community Facilities		9		12.5			
	Community Facilities		4.7					
	Field House		20					
141	Operational	15						
150	Piers & Wharves	150		5.1				
310	R&D	3.3						
	Type 1 Waste							
740	Commissary	63	121	28.4	18.1	(98	80	Pounds/$1000 sales/day)
	Commissary		74					
	Exchange		200					
510	Hospital	9	12	1.9	2.5		(2.6	Pounds/meal/day)
	Hospital	9	12					
540	Dental Clinic	9						
550	Dispensary		9.1		1.9			
720	Barracks (No Mess)		4	0.31	0.8			
	Barracks (No Mess)	1.7	4		0.3			
	Type 2 Waste							
710	Family Housing	10	10		3.5		(3.3	Pounds/capita/day EPA)
723	Bachelor Housing	7						
730	Stockade		5.3					
	Type 3 Waste							
722	Mess Hall	74.7	80	22.6	38	(0.8	0.92	Pounds/meal/day)
	Mess Hall		89					
740	Clubs	28.3	80	5.85	38	(1.2		Pounds/meal/day)
	Officer	14						
	CPO	42.7						
	Aggregate Installations					(4.6 - 9.3		Pounds/capita/day)

TABLE F-2

Models of Solid Waste Generation Rates Based on Military Facility Emission Variables

Code	Waste Source Generation Rate in Pounds/Day	Emission Variables	R	F	No. Observ.	Comments
	Type 0 Waste					
610	Administrative Building	66 + 0.81 (No. Employees)	0.55	16.0	15	Category may be too broad; "Square Footage" variable N.S. ; low R
440	Storage-Covered	434 + 6.0 (No. Employees) - 3.1 (1000's square feet)	0.75	33.4	25	"Sq. Ft." variable sign negative; data includes a commissary
210	Maintenance	200 + 2.1 (No. Employees)	0.52	15.1	16	"Sq. Ft." variable N.S.; dummy variable for Navy vs. Air Force facility N.S.
	Type 1 Waste					
740	Commissary	- 1292 + 53 (1000's Square Feet) + 74 (1000's $ Sales/Day)	0.97	56.4	6	Three degrees of freedom; negative constant term; "No. Employees" variable N.S.
740	Main Exchange	- 704 + 15 (No. Employees)	0.997	302	3	One degree of freedom; negative constant term
510	Hospital	- 1065 + 25 (1000's Square Feet)	0.93	64.7	7	"Meals Served/Day" and "No. Beds" variables N.S.; negative constant term
720	Bachelor Housing	12 + 0.52 (No. Residents)	0.64	15.8	11	"Sq. Ft." variable N.S.; grade structure not measured
	Type 3 Waste					
720	Mess Halls	- 80 + 1.2 (Meals Served/Day)	0.95	88.1	7	"Sq. Ft." variable N.S.; negative constant term
	Type 1-3 Waste (Non-Military)					
	Clothing, Hardware and Restaurants (Pounds/Week)	- 197.29 + 5.20 (No. Hours Open/Week) + 19.36 (No. Employees)	0.70	—	81	81 observations of 32 stores in summer of 1967; dummy variables for Clothing, Hardware, and Restaurants N.S. ; emission variables "No. Business Days Open/Week," "Average Annual Gross Receipts," "Square Footage," "Average Inventory $," "Equipment Value in $," and "No. Delivery Days/Week," N.S.
	Drug Stores (Pounds/Week)	- 349.25 + 5.20 (No. Hours Open/Week) + 19.36 (No. Employees)				
	Grocery Stores (Pounds/Week)	31.46 + 5.20 (No. Hours Open/Week) + 19.36 (No. Employees)				

TABLE F-3

Composition of Solid Waste by Weight Percentage

MIL. SER.	WASTE SOURCE	PAPER	CARDBOARD	SUBTOTAL PAPER	WOOD	VEGETATION	PLASTIC	RUBBER/LEATHER	TEXTILES	FOOD WASTE	FERROUS METALS	NON-FERROUS METALS	SUBTOTAL METALS	GLASS/CERAMICS	INERTS & MISC
							TYPE 0 WASTE								
N	OFFICE			67	3	11	2	4	1	4			6	1	3
N	BUSINESS			83	6		3			5			2		1
A	ADMINISTRATIVE	70	2	72			3		1	10			8	3	3
A	ADMINISTRATIVE	43	16	59		10	8		1	6	6	2	8	8	
N	CLASSROOM			68	6	4	3	1	1	3			6		7
N	STOREHOUSE			57	22		2	1	1	2			2	2	11
N	MAINTENANCE			55	11	2	2	9	4				6	1	10
A	WAREHOUSE	23	52	75			12		2	3	4	1	5	1	2
A	INDUSTRIAL	14	22	36	31		6		4		19		19	4	
A	INDUSTRIAL	15	16	31			10	1	9	2			13	6	28
A	RECREATIONAL	27	31	58		1	7		4	9	19	4	13	8	
A	OFFICES, SCHOOLS			58		15	2	3	2	5	8	1	9	5	
							TYPE 1 WASTE								
N	COMMISSARY			85	6		2			5			2		1
A	COMMISSARY	11	61	72	14		2			8				1	3
A	COMMISSARY			58		23	4			9	7		7	1	
A	EXCHANGE	8	62	70			4			12	4		4	6	3
N	HOSPITAL			78	1	5	6		2				1	2	5
N	LAUNDRY			81			3	3					5		8
N	BARRACKS (NO MESS)			54	4	11	2	2	1	17			7	1	2
A	QUARTERS (NO MESS)	29	22	51	1		5		1	5	13	2	15	16	6
AF	E.M. HOUSING			47		7	3		8	7			12	14	
							TYPE 2 WASTE								
A	FAMILY HOUSING	29	7	36		20	4		1	15	5	2	7	9	9
A	FAMILY HOUSING	42	2	44			4		3	19			11	13	6
A	FAMILY HOUSING			57		10	1	3	5	5	9	2	11	9	
AF	FAMILY HOUSING	53	6	69		6	7		5	2	6	1	7	2	
AF	NCO & OFCR QUARTERS			56		4	4		6	11			9	8	3
							TYPE 3 WASTE								
N	MESS HALL			62		9	4			18			6		2
A	MESS HALL			49		21	1	1	1	7	13	1	14	6	
A	DINING	11	18	29			6		3	43	10		10	8	1
A	DINING (EXCLUDING SOLD GARBAGE)	17	26	43			9		4	17	14		14	12	1
N	CLUB			46	9	2	3			21			5	12	3
A	CLUB			27		29	1		1	5	8	1	9	29	
							TYPE 0-3 WASTE								
A	INSTALLATION	28	19	47	1	9	6		1	11	7	1	8	9	7
A	INSTALLATION			56		14	2	2	3	5	9	1	10	7	
AF	INSTALLATION	34	14	48	3	6	4		3	12	8		8	2	17
AF	INSTALLATION			58	7	4	4		2	8			10	3	2
N	INSTALLATION			57	17		9		5				8		3
							MUNICIPAL SOLID WASTE NATIONAL AVERAGE, 1968								
	MUNICIPAL (MOIST BASIS)			43	3	12	2	1	3	13			9	9	7
	MOISTURE CONTENT			20	15	49	12	7	20	49			5	2	5
	ADJ. MUNICIPAL (DRY BASIS)			44	3	8	2	1	3	8			11	12	8
							MUNICIPAL SOLID WASTE GENERATION BY MATERIAL AND SOURCE, 1971								
	MUNICIPAL (AS GENERATED)	19	12	31	4	19	3	3	1	18	9	1	10	10	1
	MUNICIPAL (AS DISPOSED)	23	15	38	4	15	4	3	2	14			10	10	2

waste generating sources (by building or groups of similar buildings). The survey supervisor, after consultation with collection personnel, constructs a collection and weighing schedule for each day of the two-week survey. Since the collection personnel will do all of the data recording, only minor modifications should be made to the existing collection schedule. A protocol, covering the various steps of the solid waste survey, is constructed by the survey supervisor and explained to the collection personnel, along with instructions on filling out a collection card and weigh card.

(2) Step 3. A collection card is filled out by the truck driver for each refuse container collected during a collection run.

(a) Date -- month, day and year.

(b) Can Size -- circle volume units.

(c) Building Number -- according to method approved by survey supervisor.

(d) Truck Identification -- according to method approved by survey supervisor.

(e) Run Number -- circle number which corresponds to the load of the day.

(f) Load Type -- circle number which corresponds to the predominate refuse type in the container; if none can be determined, circle mixed refuse. Unusual waste materials included in an otherwise homogeneous waste load should be noted under the "other" category (e.g., motor block in a container full of wood scraps would be reported as a load type 2, 8-motor block).

(g) Load Volume -- circle number which best approximates the volume of waste in a container. The "no load" category is used only when investigating the waste production of a particular building or group of buildings. All conditions must be reported.

(h) Weather -- circle number which best describes the predominating weather for the run. Intermittent drizzle or snow flurries should be reported as "dry."

(3) Step 4. A weigh card is filled out by the truck driver at the end of each trip to the landfill or incinerator. The survey supervisor will arrange for the scale operator to fill out similar weigh cards on all non-scheduled truck loads arriving at the landfill. The survey supervisor

will collect information on truck capacities and composition ratios. Each collection truck driver will supply the following information on the weigh cards:

(a) Date -- month, day and year.

(b) Truck Identification -- according to the method approved by the survey supervisor.

(c) Run Number -- circle number which corresponds to the number of loads for that day.

(d) Loaded Weight -- the weigh master or truck scale operator will supply the loaded weight values to be entered in this blank.

(e) Load Type -- circle the numbers of the major components of the load and visually estimate the volume percentage of all load types composing over 20 percent of the load. The mixed refuse category should be used when no predominating load types can be identified.

(f) Load Volume -- circle the number which best approximates the volume of the load in the truck. "No load" is used to record the empty weight of the truck and driver.

(g) Weather -- circle the number which best describes the predominating weather for the run. Intermittent drizzle or snow flurries should be reported as "dry."

(h) After the weigh card is completed, the driver initials the bottom line and bands together that run's weigh card with the appropriate collection cards. At the end of the day, the driver turns in that day's information card bundles to his route supervisor who forwards the material to the survey supervisor.

b. Single Waste Stream Analysis, Step 5. Sort the collection cards by building number(s) and place them in chronological order. The loose yardage volume generated between collections is determined by multiplying the can size by the percentage of load volume. An approximate value of the collected weight is determined by multiplying the loose yardage volume by the appropriate bulk density values. Composition of the single waste stream is determined from the "Load Type" section on the collection card, or by using composition percentages. If a collection run is confined to a particular facility grouping (as family housing), the appropriate weigh card can be isolated and used to provide weight, volume and composition information.

c. Installation Total Waste.

(1) Step 6. The volume and weight estimates, derived from the analysis of the collection cards in Step 5, are summed over all the "single waste streams" to provide total weight and volume estimates on the collection points. Sum the net weights (loaded weight minus no load) from the weigh cards to arrive at the total collected weight. The loose yardage volume of each compactor truck is determined by multiplying the compactor's capacity by the load volume (percent) and the compaction ratio. Multiply non-compactor truck capacities by the load volume (percent). Sum the calculated volumes of all collection runs to determine the total volume. The bulk density of each collection run, or total installation waste, can be determined by dividing the net weight by the loose-cubic-yard volume. "Composition" information can be obtained from weigh cards by converting load type volumes to load type weights for each collection truck, summing load type weights, and dividing by the sum of the adjusted refuse weights for all collection trucks. Load type weight is determined by multiplying load type volume by the appropriate load type bulk densities. Component weights of the solid waste materials can also be derived by multiplying the total weight by the installation composition percentages.

(2) Step 7. As a check on the survey operation, make preliminary calculations of the weights and volumes (as per Steps 5 and 6), using data from the first two days of the survey, and compare the estimates derived independently from the collection cards, the weigh cards, and the no-measurement analysis of Plan A.

(3) Step 8. Revise the estimates of Plan A using the estimates derived from the two-week limited solid-waste survey and present the historical and forecasted results.

F.4. MEDIUM COST/MEDIUM PRECISION SURVEY (PLAN C). Plan C combines the no-measurement study of Plan A with a survey which entails 20 contiguous days of weight measurements of the installation's waste streams, and the physical segregation and weighing (for composition analysis) of three 100- to 200-pound samples of solid waste generated by each of the various facilities on the installation. Effective implementation of the Plan C survey should result in an estimate of the installation's mean daily waste generating rate for the encompassing quarter with a 0.9 level of confidence and an error plus or minus ten percent of the mean. Estimates for the year, or other periods outside the sample quarter, can be accomplished through revision of the Plan A estimates based on the weight measurements. Three 100- to 200-pound randomly selected samples from each solid waste emission source (building or group of similar

buildings) should provide estimates of the component proportions with at least 0.9 confidence levels and errors of plus or minus 10 to 30 percent of the fraction means.

a. No-Measurement Analysis, Step 1. Repeat the steps of the "no-measurement" Plan A analysis described in Plan A, paragraph F.2.

b. Medium Cost/Medium Precision Survey.

(1) Step 2. The survey supervisor designs the survey and prepares an implementation protocol. To assure coordination and control, the survey supervisor should be located on the installation for the duration of the survey. The major tasks to be accomplished in the preparation of the protocol are:

(a) Identify collection containers, waste generating sources (buildings), collection routes and disposal points on a map of the installation.

(b) Group the buildings and their containers by the major waste source categories (Family Housing, Troop Support, Industrial Activities) and subcategories.

(c) With the assistance of the collection supervisor, restructure the collection routes so that each truckload contains a single-source category of waste. Arrange for the return of each dumpster to its initial collection location. Set up a special collection team to collect the waste from those buildings which do not fall into a collection-run category.

(d) Designate a weighing station location (preferably at the main sanitary landfill) and instruct all facility managers that loaded solid waste trucks must have their loads and tare weights weighed and recorded by the survey truck-scale reader.

(e) Arrange for the special collection team to make daily stops to weigh the garbage at dining facilities with wet garbage contracts.

(f) Arrange for an enclosed space in which the composition team can segregate and weigh the composition samples.

(g) Arrange for the provision of necessary equipment:

1. A pickup truck to collect plastic bags from designated buildings and the landfill. Note: If the contractor will not cooperate in collecting containers, a small dump truck will be required instead of a pickup.

2. Portable, calibrated, truck scales (two each with 20,000-pound capacities).

3. Bathroom scales (two) for weighing garbage at dining facilities.

4. Plastic bags and tags for distribution by the special collection team.

5. Two broad-mouth shovels and two rakes for mixing and quartering the refuse selected for composition analysis.

6. Weighing scale for incinerator operators.

7. Plastic bags and tags for transporting refuse from the landfill to the composition analysis location.

8. Large table (6 x 4 feet) for composition analysis.

9. Fifteen 32-gallon containers for composition analysis.

10. Weighing scale to weigh components (200-pound capacity).

11. Broom, brush and pan for cleanup after composition analysis.

12. Liquid disinfectant detergent for cleaning up after compositional analysis.

13. Approximately six to ten pairs of reinforced neoprene gloves for sanitation purposes during composition analysis.

14. Protective clothing (shoes, glasses and coveralls; four pairs each).

c. Weight and Volume Measurements, Step 3. Construct a daily schedule for the special collection team indicating which containers (including solid wet garbage) to weigh. If the weighing is accomplished by the team at the collection point, the data (excluding Load Type information) can be recorded on the collection cards. If the loaded truck is weighed,

a weight sheet should be used to record the data. All truckloads of solid waste traveling from the installation facilities to final destinations must be weighed and measured for percent fillage, preferably at a central truck-scales location. The data should be recorded on a weight sheet. It is assumed that each truckload of solid waste, as a result of Step 2, (b) and (c), can be identified with a particular installation building, or grouping of similar buildings.

d. Composition Sampling.

(1) Step 4. Construct a daily schedule indicating which truckloads, scheduled for disposal, are to be sampled for composition analysis. Truckloads to be sampled should be randomly selected to assure that each waste source stream (building or grouping of similar buildings) will have three 100- to 200-pound samples taken over the 20-day sampling period. The collection supervisor should arrange to have the pre-selected truckloads delivered to the landfill (or point of sample collection) as soon as the regular daily collection runs begin. After each selected truckload is weighed at the truck-scales location, the load is dumped. The composition team rakes the pile to obtain an even distribution of the components and then subdivides the pile into 100- to 200-pound portions. A portion is randomly selected (using numbered slips drawn from a hat), bagged and tagged with proper identification. After the scheduled number of loads is sampled, the bags are brought to the segregation site. Each composition sample is then segregated by hand into component parts which are weighed. The data are recorded on composition sheets.

(2) Step 5. After two days of collecting weight, volume and composition data, make preliminary calculations of the weights, volumes, and compositions of the facility waste streams and check these values against the estimates derived by the no-measurement analysis of Plan A (Step 1, paragraph F.2). Revise the survey procedure where necessary.

(3) Step 6. On completion of the 20-day survey, compile the recorded data, make the necessary calculations, and present the results.

(4) Step 7. Revise the monthly and yearly forecasts of Plan A using the estimates derived in Step 6.

F.5. HIGH COST/HIGH PRECISION SURVEY (PLAN D). Plan D consists of the "no-measurement" study of Plan A, combined with the repeated application of the Plan C survey (20 contiguous days of weight, volume, and composition measurements) in each quarter of the year. Over a twelve-month period the installation's total waste stream, and the waste streams from the major

solid waste generating sources (buildings or groups of buildings), will undergo 80 days of weight and volume measurements. Twelve 100- to 200-pound composition samples will be analyzed for each generating source. A survey of this scope should result in estimates with errors less than plus or minus 10 percent of the mean weight with a 0.9 confidence level, for each quarter and the year. A similar level of precision should hold for estimates of the solid waste components. The derived estimates can be used to determine the secular trend of the installation's waste-growth and a seasonal index of the solid waste pattern. Factors for converting collection volumes to weights, and emission factors which associate solid waste generation rates with facility activities (personnel levels, floor space, etc.) can be accurately determined. The goal of the survey is to enable the installation to construct models of its solid waste streams. The models can be used to forecast the levels of composition of future waste streams. The installation will, of course, be interested in the historical data on the solid waste operation, but in making decisions on waste reduction and resource recovery its primary interest will concern the future nature of the solid waste streams.

a. No-Measurement Analysis, Step 1. Complete the five-step analysis of Plan A (paragraph F.2). The no-measurement estimates of the activity solid waste streams and component weights will be used as a reference base to afford comparisons with the measured (weighed) values.

b. High Cost/High Precision Survey.

(1) Step 2. Perform Steps 2 through 7 of Plan C for the first quarter's survey. The four 20-day survey periods should start approximately 91 days apart, but two of the survey periods should be scheduled within, or bridging, months of high and low generation rates. If the seasonal pattern is expected to be different for the year surveyed, randomly select a starting month, and then schedule the remaining three 20-day survey periods to start every 91 days.

(2) Step 3. Repeat Step 2 for each of the remaining quarterly surveys. The protocol of Step 2 can be reused, with the exception that new schedules for composition sampling (Step 4 of Plan C) should be constructed to avoid inadvertent bias.

SUBJECT INDEX

Subject	Page
B	
Balers	2-5
C	
Characteristics of Solid Waste	1-5
Collection and Storage of Solid Waste	2-1
Collection Equipment	3-9
Collection Points	3-1
Combined Versus Separate Collection	3-18
Compactors	2-2
Completing the Sanitary Landfill and Ultimate Site Use	4-44
Composting	4-4
Container-Haul Vehicles	3-14
Container Location	3-5
Containers	3-1
Containers and Container Storage	2-11
Crew Collection Methods	3-20
D	
Deep-Well Disposal (Injection)	5-6
Designing Efficient Routing	3-20
Disposable Containers	2-11
Disposal of Classified Material	2-16
Disposition of Post-Consumer Wastes	1-9
Disposition of Resource Recovery Residues	4-12
Disposition of Scrap and Usable Material	1-9
E	
Encapsulation	5-6
Enclosed-Compaction Container	3-5
Environmental Impact Assessment	1-3
Environmental Protection	1-2
Equipment Selection	3-1
Equipment Selection and Crew Size	3-18
Equipment Used on Sanitary Landfills	4-31
Existing Facilities Where RDF May Be Used	4-7
F	
First Step in Solid Waste Management System	2-1
Fluorescent Lamps	5-12

SUBJECT INDEX (Continued)

Subject Page

H

Hazardous Waste Treatment and Disposal Methods 5-4
Hospital Wastes 5-9

I

Incineration 4-12
Incineration of Hazardous Wastes 5-5
Incinerator Components 4-15
Incinerator Control 4-19
Incinerator Operation 4-18
Industrial Wastes 2-19

L

Land Burial of Hazardous Wastes 5-5
Landfill 5-6
Lugger-Box Container 3-1

M

Methods of Landfilling 4-28
Methods of Ultimate Disposal of Solid Waste 1-8

N

Nondisposable Containers 2-11

O

Occupational Safety and Health 1-3
Options for Disposal of Solid Waste 4-1

P

Pesticide Containers 5-10
Pesticides 5-10
Planning Collection 3-18
Planning New Sanitary Landfills 4-27
Post-Incineration Resource Recovery 4-22
Procedures (by Source) for Handling Solid Waste 2-12
Processing of Solid Wastes on Board Ships 2-17
Processing the Waste Stream into RDF 4-4
Process Wastes 5-7
Pulpers 2-8
Pyrolysis of Hazardous Wastes 5-5

SUBJECT INDEX (Continued)

Subject Page

R

Rates of Generation of Solid Waste 1-5
Recycling and Resource Recovery 1-3
Resource and Energy Recovery Technology 4-2
Resource Recovery 4-1
Roll-Off Container 3-5
Route Layout 3-19

S

Safety 4-19
Sanitary Landfilling 4-24
Self-Loading Container 3-1
Separators 4-4
Ship Wastes 2-17
Shredders 4-4
Source Separation of Solid Waste 2-1
Sources of Assistance in Handling Hazardous Wastes . . 5-6
Sources of Solid Waste 1-4
Systems for Source Separation of Paper 2-16

T

Transfer Hauling Alternatives 3-23
Transfer Operations 3-22
Types of Hazardous Waste 5-1
Types of Incinerators 4-14
Types of Solid Waste 1-4
Typical Cell Construction 4-34

U

U.S. Department of Agriculture Regulations for
Garbage Disposal 2-18

W

Waste-Haul Vehicles 3-11
Waste Hazardous Materials 5-7

☆U.S. GOVERNMENT PRINTING OFFICE: 1993 - 342-421/62434

PIN : 033988-000