TECHNICAL MANUAL

AVIATION UNIT MAINTENANCE (AVUM) AND AVIATION INTERMEDIATE MAINTENANCE (AVIM) MANUAL

FOR

GENERAL AIRCRAFT MAINTENANCE

(TOOLS AND GROUND SUPPORT EQUIPMENT)

VOLUME 9

*This manual together with TM 1-1500-204-23-1 through TM 1-1500-204-23-8 and TM 1-1500-204-23-10, dated 31 July 1992, supersedes TM 55-1500-204-25/1, dated 6 April 1970, including all changes.

DISTRIBUTION STATEMENT A: Approved for public release; distribution is unlimited.

HEADQUARTERS, DEPARTMENT OF THE ARMY
31 JULY 1992

This copy is a reprint which includes current pages from Changes 1 and 2.

CHANGE

NO. 3

HEADQUARTERS
DEPARTMENT OF THE ARMY
WASHINGTON, DC 15 June 1999

AVIATION UNIT MAINTENANCE (AVUM)
AND
AVIATION INTERMEDIATE MAINTENANCE (AVIM) MANUAL
FOR
GENERAL AIRCRAFT MAINTENANCE

(TOOLS AND GROUND SUPPORT EQUIPMENT)

VOLUME 9

DISTRIBUTION STATEMENT A: Approved for public release; distribution is unlimited.

TM 1-1500-204-23-9, 31 July 1992, is changed as follows:

1. Remove and insert pages as indicated below. New or changed text material is indicated by a vertical bar in the margin. An illustration change is indicated by a miniature pointing hand.

Remove pages	Insert pages
.....	A / (B blank)
i/ (ii blank)	i / (ii blank)
9-55 and 9-56	9-55 and 9-56
Index 3 and 4	Index 3 and 4
Index 7 and 8	Index 7 and 8

2. Retain this sheet in front of manual for reference purposes.

By Order of the Secretary of the Army:

DENNIS J. REIMER
General, United States Army
Chief of Staff

Official:

JOEL B. HUDSON
Administrative Assistant to the
Secretary of the Army
9911803

DISTRIBUTION:
To be distributed in accordance with Initial Distribution Number (IDN) 313302, requirements for TM 1-1500-204-23-9.

CHANGE

NO. 2

HEADQUARTERS
DEPARTMENT OF THE ARMY
WASHINGTON, D.C., 1 February 1994

AVIATION UNIT MAINTENANCE (AVUM)
AND
AVIATION INTERMEDIATE MAINTENANCE (AVIM) MANUAL
FOR
GENERAL AIRCRAFT MAINTENANCE

(TOOLS AND GROUND SUPPORT EQUIPMENT)

VOLUME 9

DISTRIBUTION STATEMENT A: Approved for public release; distribution is unlimited.

TM 1-1500-204-23-9, 31 July 1992, is change as follows:

1. Remove and insert pages as indicated below. New or changed text material is indicated by a vertical bar in the margin. An illustration change is indicated by a miniature pointing hand.

Remove pages	Insert pages
4-39 and 4-40	4-39 and 4-40
5-7 and 5-8	5-7 and 5-8
7-5 and 7-6	7-5 and 7-6
9-23 and 9-24	9-23 and 9-24
9-29 and 9-30	9-29 and 9-30
A-1 and A-2	A-1 and A-2

2. Retain this sheet in front of manual for reference purposes.

By Order of the Secretary of the Army:

GORDON R. SULLIVAN
General, United States Army
Chief of Staff

Official:

MILTON H. HAMILTON
Administrative Assistant to the
Secretary of the Army
06351

Distribution:

To be distributed in accordance with DA Form 12-31-E, block No. 3302, requirements for TM 1-1500-204-23-9.

☆ U.S. GOVERNMENT PRINTING OFFICE: 1994 - 510-106-00002

CHANGE

NO. 1

HEADQUARTERS
DEPARTMENT OF THE ARMY
WASHINGTON, D.C., 28 MAY 1993

AVIATION UNIT MAINTENANCE (AVUM)
AND
AVIATION INTERMEDIATE MAINTENANCE (AVIM) MANUAL
FOR
GENERAL AIRCRAFT MAINTENANCE

(TOOLS AND GROUND SUPPORT EQUIPMENT)

VOLUME 9

DISTRIBUTION STATEMENT A: Approved for public release; distribution is unlimited.

TM 1-1500-204-23-9, 31 July 1992, is changed as follows:

1. Remove and insert pages as indicated below. New or changed text material is indicated by a vertical bar in the margin. An illustration change is indicated by a miniature pointing hand.

Remove pages	Insert pages
i/(ii blank)	i/(ii blank)
8-7 and 8-8	8-7 and 8-8

2. Retain this sheet in front of manual for reference purposes.

By Order of the Secretary of the Army:

GORDON R. SULLIVAN
General, United States Army
Chief of Staff

Official:

MILTON H. HAMILTON
Administrative Assistant to the
Secretary of the Army
04405

DISTRIBUTION:
To be distributed in accordance with DA Form 12-31-E, block no. 3302, requirements for TM 1-1500-204-23-9.

PRECAUTIONARY DATA

Personnel performing instructions involving operations, procedures, and practices which are included or implied in this technical manual shall observe the following instructions. Disregard of these warnings and precautionary information can cause serious injury, death, or an aborted mission.

WARNING

HAZARD COMMUNICATION

Most materials supplies listed in this volume (paints, solvents, etc.) contain chemical agents which are considered hazardous under 29 CFR 1910.1200, The Hazard Communication Rule (25 Nov 1983). All personnel who have potential on-the-job exposure to chemical agents must be aware of provisions of their organization's written hazard communications program which describes how your facility will comply with the standard. An important part of this standard is the requirement for Material Safety Data Sheets (MSDS) for hazardous materials. The MSDS lists the hazardous chemical components for the product and contains essential information on use, handling, fire-fighting, labeling, emergency procedures (such as accidental spills and leaks) and disposal of material. These MSDS must be accessible to the worker and adequate training provided BEFORE use of hazardous materials. MSDS by themselves are not an adequate substitute for proper training and written procedures.

Consult your supervisor, safety officer or industrial hygienist before using any material which may be considered hazardous. Warning labels on products or general warnings mentioned in this document ARE NOT intended to be a complete description of all potential hazards, nor are they a substitute for proper training and MSDS information.

WARNINGS, CAUTIONS, and NOTES are means of attracting attention to essential or critical information in a manual. Definitions are outlined as follows.

WARNING: An operating or maintenance procedure, practice, condition, statement, etc. which if not strictly observed, could result in injury to or death of personnel.

CAUTION: An operating or maintenance procedure, practice, condition, statement, etc., which, if not strictly observed could result in damage to, or destruction of, equipment or loss of mission effectiveness or long term health hazards to personnel.

NOTE: An essential operating or maintenance procedure, condition, or statement, which must be highlighted.

WARNING

USING SOLVENTS/PAINTS

Consider all solvents/paints potentially hazardous and flammable. Consult MSDS and be thoroughly familiar with health and safety aspects of material prior to use.

HOT BRAKES

If it is necessary to approach a wheel with a hot brake, do so either from directly in front or directly behind the aircraft.

GROUND SUPPORT EQUIPMENT

To prevent accidental falls, appropriate maintenance platforms/safety stands illustrated in appropriate workstand manuals or any other approved locally procured/manufactured safety stands/restraint equipment will be used when working (above 10 feet) on aircraft in a non-tactical environment.

Do not attempt to lift any load when the hydraulic axle jack is tilted.

Release air pressure in air compressor tank before performing maintenance on air compressors.

Disconnect power before changing belts on electrically-driven compressors.

Disconnect electrical power before opening or disassembling any part of electrical equipment.

Install safety lock when an adjustable-height maintenance platform is in use.

Ensure the air hose used with compressed air is safe for the pressure being handled.

FIRE EXTINGUISHERS

Halon type fire extinguishers, Monobromotrifluoromethane (CF3BR) and Bromocholormethane (CB) are odorless gasses. When used in confined areas, available oxygen for breathing may be depleted. Use supplied breathing air when using these gasses in enclosed spaces.

HYDRAULIC FLUID

To avoid contamination, do not use previously opened cans of hydraulic fluid. A new, sealed can of fluid must be opened and used. When opening can, clean top and use a clean sharp, unplated instrument to prevent contamination.

COMPRESSED AIR

Compressed air shall not be used for cleaning purposes unless reduced to less than 30 psi and then only with effective chip-guarding and personal protective equipment.

NOISE HAZARD

Noise levels reached during ground runup of Army aircraft are of a level that may cause permanent hearing loss. All personnel shall wear adequate hearing protection when working on aircraft with engines in operation.

PROPER USE OF PLATED TOOLS

Use only chrome plated steel or unplated steel tools for disassembly or reassembly procedures described in this manual. Use of cadmium or zinc plated tools is not permitted since these platings are prone to chipping and flaking. Should these chips or flakes become embedded in aircraft parts, galvanic corrosion will result. Should these chips or flakes enter fuel or oil wetted components, they may eventually clog the filter or produce intergranular attack of nickel or titanium base alloys at elevated temperature. All tools regardless of type plating should be serviceable and free of chipping.

ELECTRICAL EQUIPMENT

All switches and electrical equipment shall be of the enclosed explosion-proof type. All metal apparatus shall be grounded to avoid the danger of igniting test fluid fumes or creating electrical shock.

LUBRICATING OIL

Lubricating oil, MIL-L-7808 or MIL-L-23699, contains an additive which is poisonous and absorbed readily through the skin. Do not allow oil to remain on skin any longer than necessary.

To avoid contamination, do not use previously opened cans of turbine engine oil. A new sealed can of fluid must be opened and used. When opening can, clean top and use a clean sharp, unplated instrument to prevent contamination.

FUEL

When servicing aircraft or support equipment, clean up spilled fuel with cotton mops or cotton rags. Wash off any fuel on hands, body, or clothing.

HANDLING ACID

Wear protective clothing when mixing acid with water. Always pour acid into water, never water into acid.

REMOVING CORROSION

Take precautions to prevent possible dust explosions when removing corrosion from steel alloys. Use goggles or face shield when removing paint or corrosion with a wire brush or by the grinding method.

OXYGEN SYSTEM

Do not allow petroleum base products to come in contact with oxygen system components, as an explosion or fire may result.

LIST OF EFFECTIVE PAGES

Insert latest changed pages; dispose of superseded pages in accordance with regulations.

NOTE: On a changed page, the portion of the text affected by the latest change is indicated by a vertical line, or other change symbol, in the outer margin of the page. Changes to illustrations are indicated by miniature pointing hands. Changes to wiring diagrams are indicated by shaded areas.

Dates of issue for original and changed pages are:

Original - 31 July 1992
Change 1 - 28 May 1993
Change 2 - 1 February 1994
Change 3 - 15 June 1999

Page No.	*Change No.
Cover	0
a through c /(d blank)	0
i/ (ii blank)	3
1-1 / (1-2 blank)	0
2-1 through 2-4	0
3-1 through 3-37 / (3-38 blank)	0
4-1 through 4-39	0
4-40	2
4-41 through 4-52	0
5-1 through 5-6	0
5-7	2
5-8	0
6-1 through 6-6	0
7-1 through 7-4	0
7-5	2
7-6 through 7-11 / (7-12 blank)	0
8-1 through 8-6	0
8-7	1
8-8 through 8-17 / (8-18 blank)	0
9-1 through 9-22	0
9-23	2
9-24 through 9-28	0
9-29	2
9-30 through 9-55	0
9-56	3
A-1	.
A-2	2
Glossary 1 and Glossary 2	0
Index 1 through Index 3	0
Index4	3
Index 5 and Index 6	0
Index 7	3
Index 8 through Index 21 / (Index 22 blank)	0

*Zero in this column indicates an original page.

TECHNICAL MANUAL

No. 1-1500-204-23-9

HEADQUARTERS
DEPARTMENT OF THE ARMY
Washington, D.C., 31 July 1992

Aviation Unit Maintenance (AVUM) and Aviation Intermediate Maintenance (AVIM) Manual for General Aircraft Maintenance (Tools and Ground Support Equipment)

REPORTING ERRORS AND RECOMMENDING IMPROVEMENTS

You can help improve this manual. If you find any mistakes or if you know of a way to improve the procedures, please let us know. Mail your letter or DA Form 2028 (Recommended Changes to Publications and Blank Forms) or DA Form 2028-2 located in the back of this manual directly to: Commander, US Army Aviation and Missile Command, ATTN: AMSAM-MMC-LS-LP, Redstone Arsenal, AL 35898-5230. You may also submit your recommended changes by E-Mail directly to Is-lp@redstone.army.mil or by fax 256-8426546/DSN 7886546. A reply will be furnished directly to you. Instruction for sending an electronic 2028 may be found at the back of this manual immediately preceding the hard copy 2028.

DISTRIBUTION STATEMENT A: **Approved for public release; distribution is unlimited.**

TABLE OF CONTENTS

		Page
CHAPTER 1	INTRODUCTION..	1-1
CHAPTER 2	TOOL PROCEDURES AND PRACTICES	2-1
CHAPTER 3	MEASURING TOOLS	3-1
CHAPTER 4	GENERAL MAINTENANCE TOOLS	4-1
CHAPTER 5	PNEUMATIC TOOLS	5-1
CHAPTER 6	ELECTRICAL POWER TOOLS	6-1
CHAPTER 7	SPECIAL AIRCRAFT TOOLS	7-1
CHAPTER 8	TORQUE TOOLS AND TORQUE PRINCIPLES AND PROCEDURES	8-1
CHAPTER 9	GROUND SUPPORT EQUIPMENT	9-1
APPENDIX A	REFERENCES	A-1
GLOSSARY		Glossary-1
INDEX		Index-1

CHAPTER 1

INTRODUCTION

1-1. Purpose. This volume provides general information pertaining to tools and ground equipment used in aircraft maintenance. The application of materials and techniques used on specific aircraft is not covered in this volume. Specific aircraft application, usage, and substitution are found in the individual aircraft maintenance manuals. This volume is of maximum benefit to the mechanic who desires information about the various types of tools and ground support equipment used in aircraft maintenance. This volume furnishes the mechanic a source of information about how to perform various mechanical functions which are used on all aircraft. This volume is not a requisitioning authority, and applicable repair parts and special tools list should be consulted to obtain the unit of issue and National Stock Number of the items required for maintenance.

1-2. Scope. General information to guide aircraft maintenance personnel is covered within this volume; however, no attempt has been made to include special parts or equipment which are applicable only to individual or specific aircraft. General tool procedures and practices are discussed in Chapter 2. Chapter 3 describes measuring tools, while basic tools are covered in Chapter 4. Pneumatic and electric tools are discussed in Chapter 5 and Chapter 6. Special aircraft maintenance tools are covered in Chapter 7. Principles of torque and torque tools are described in Chapter 8. Finally, Chapter 9 covers ground support equipment.

1-3. Consumable Materials. Refer to TM 1-1500204-23-6 for consumable materials in this volume.

CHAPTER 2

TOOL PROCEDURES AND PRACTICES

2-1. General. This chapter discusses general care and upkeep of the tools and equipment used in aircraft maintenance. It is important that the aircraft mechanic is familiar with these guidelines, so that the aircraft unit can experience continued mission reliability.

2-2. Types of Tools Used In Army Aviation. The Army aircraft mechanic has a large variety of tools at his disposal. There are basic hand tools, measuring tools, power tools, special tools for aircraft, and torque tools.

2-3. Tool Care. The efficiency of a mechanic and the tools he/she uses is determined to a great extent by the condition in which the tools are kept. Tools should be wiped clean and dry before being placed in a tool box. If their use is not anticipated in the near future, they should be lubricated to prevent rust. This is especially true if tools are stored under conditions of extremely humid or salt air.

a. *Cleaning.* Proper cleaning is of prime importance in the care of the aircraft maintenance tools. Listed below are a few simple procedures which are the basis for proper care of aircraft maintenance tools.

WARNING

Drycleaning solvent is flammable and solvent vapors are toxic. Use P-D-680, Type II Solvent in a well-ventilated area. Keep away from open flames. Avoid prolonged solvent contact with skin.

(1) Wash grease and dirt from tools with drycleaning solvent, Federal Specification P-D-680, and wipe dry with a clean, dry cloth.

(2) Clean serrated jaw faces of pliers, vises, etc., with a wire brush.

(3) Remove filings from between teeth of files by use of a file card.

WARNING

When using air pressure, be extremely careful. Do not blow stream of air toward yourself or any other person. Users of air pressure and personnel within the immediate area shall wear safety glasses, goggles, or face shield. Ear protection may be required. Pressure will not exceed 30 psig. Failure to comply may result in injury to personnel.

(4) Wipe excess lubricating oil or residue from taps and dies. Use clean, dry cloth for wiping. Blow clean with dry, compressed air.

b. *Lubrication.* Lubricate all working parts of cleaned tools with engine oil, MIL-L-6082. Lightly coat nonworking surfaces with a film of this oil.

c. *Storage.* Tools should always be kept in their appropriate storage place, when not in use. A tool box or case not only keeps the tool protected from dirt, it also ensures that the tool can be found, as long as it is returned to its place after use. The tool box should be locked and stored in a designated area, and an inventory list maintained for that box.

2-4. Tool Selection. The selection of the proper tool or size of tool to fit the job is of prime importance. Using a tool not suited for the job or of incorrect size can result in damage to the tool, damage to equipment being maintained, or injury to maintenance personnel. Proper choice of tools enables the mechanic to perform his work quickly, accurately, and safely.

2-5. Prohibition Against the Use of Cadmium and Zinc-Plated Tools on Army Aircraft. Use only chrome-plated steel or unplated steel tools for disassembly or reassembly procedures. Use of cadmium-or zinc-plated tools is not permitted since these platings are prone to chipping and flaking. Should these chips or flakes become embedded in aircraft parts galvanic corrosion will result. Should these chips or flakes enter fuel or oil wetted components they may eventually clog the filter or produce intergranular attack of nickel or titanium base alloys at elevated temperature. All tools regardless of type plating should be serviceable and free of chipping.

2-6. Tool Use. The following paragraphs describe general practices regarding the use of tools.

a. *Tool Storage.* Keep each tool in its proper storage place.

b. *Tool Condition.* Keep tools free of rust, nicks, burrs, and breaks.

c. *Tool Application.* Use each tool only for the use for which it was designed. For example, do not use a screwdriver as a chisel, or pliers as a wrench. The tool and/or the aircraft component may be damaged beyond repair.

d. *Tool Location During a Job.* Keep tools within easy reach and where they cannot fall on the floor or on machinery. Avoid placing tools above machinery or electrical apparatus. Serious damage will result if the too! falls into the machinery after the equipment is turned on or running.

e. *Damaged Tools*. Never use damaged tools. A faulty screwdriver may slip and damage the screw slot or cause injury to the user. A gauge stretched out of shape will result in inaccurate measurements.

2-7. Tool Safety. A tool may be efficient, essential time-saving, and convenient. It can also be dangerous when used incorrectly. ALWAYS use tools only for the purpose for which they are designed. In addition to this requirement, observe the following practices:

a. Inspect tools and equipment for unsafe conditions before starting work.

b. Wear proper clothing and protective equipment.

c. Mark and remove from service all unserviceable tools.

2-8. Shop Practices. The practices and procedures described in this chapter pertain to the manufacturing and repair functions of aviation activities and are applicable to all levels of maintenance.

a. *Shop Housekeeping.* Housekeeping is the yardstick by which the shops in the manufacturing section are judged. A clean, well arranged shop is a safe shop and reflects credit on all personnel concerned with its operation. The following shop practices shall be observed.

(1) Oil pans or drip pans shall be used where leaking oil, grease, and similar materials may cause hazardous accumulations on equipment or floors. All spills shall be cleaned up immediately. Approved sweeping compound may be used to remove these materials from the floor.

CAUTION

Floors shall not be cleaned with volatile or flammable liquids. A flammable film may remain and cause a fire hazard.

(2) Floors shall be maintained smooth and clean, free of all obstructions and slippery substances. Holes and irregularities in floors shall be repaired to maintain a level surface free from tripping hazards.

(3) All unnecessary materials on walls shall be removed and projections shall be kept to a minimum.

(4) Aisles shall be clearly defined and kept free of hazardous obstructions. Where possible, aisles shall be suitably marked by painting.

(5) All machines, work benches, aisles, etc., shall be adequately illuminated.

b. *Shop Safety.* Unsafe equipment and fire hazards are the main factors to be observed while planning safety procedures.

(1) Equipment safety. Unsafe equipment shall be reported immediately. The following equipment safety practices shall be observed:

(a) Machines shall be located to provide operators with sufficient space to handle materials and perform job operations without interference.

(b) Bolt down all machinery that can move or walk due to vibration (drill press, bench grinder, etc.)

(c) Substantial low resistance conductors shall be used to ground all stationary and portable machines, equipment, or other devices in which static charge may be generated, or which require electrical circuits of a hazardous nature.

(d) Shop machinery shall be operated only by qualified personnel observing safe practices.

(e) Safety devices, such as guards, interlocks, automatic releases, and stops, shall always be kept in operating condition.

(f) Ensure that all unauthorized personnel are clear of area before opening valves or energizing electrical circuits for starting machinery.

(g) Suitable mechanical guards, such as enclosures or barricades, shall be permanently installed on all machinery not already equipped with such to eliminate danger of injury from moving parts.

(h) Machinery shall not be adjusted, repaired, oiled, or cleaned while machine is in operation or power is on.

(i) Personnel operating machinery shall wear protective clothing as prescribed. A protective face shield or goggles shall be worn when operating a grinder regardless of whether grinder is equipped with attached shields.

(j) Jewelry shall not be worn while performing any maintenance.

(2) Fire safety. A constant vigilance must be maintained to seek out fire hazards. Fire hazards are constantly present in the shop where sparks, friction, or careless handling can cause an explosion that may destroy equipment or buildings, and injure or kill personnel. Refer to AR 385-10, The Army Safety Program and the Occupational Safety and Health Act of 1971. The following fire safety practices shall be observed:

(a) NO SMOKING signs shall be placed in areas where smoking could create a fire hazard.

(b) Personnel shall be trained in the use, knowledge, and location of shop fire fighting equipment.

(c) Each shop shall be equipped with fire extinguishers suited for type of fire most likely to occur.

(d) Use correct fire extinguisher for class of fire as follows.

* Class A fire (wood, paper, trash, etc). Use water fire extinguisher.

* Class B fire (oil, paint, fuel, grease, etc). Use bromotrifluromethane, carbon dioxide or dry chemical extinguisher with Class B rating.

* Class C fire (electrical equipment). Use bromotrifuoromethane, carbon dioxide or dry chemical extinguisher with Class C rating.

* Class D fire (combustible metals-magnesium, titanium, zirconium, sodium, lithium, and potassium). Use dry powder type fire extinguisher.

(e) Oily waste, rags, and similar combustible materials shall be discarded in self-closing metal containers which shall be emptied daily.

(f) Flammable materials shall not be stored in the shop.

(g) Use only approved cleaning solvents.

2-9. Tool Boxes. Tool boxes are used for storing tools. They are usually made of steel. Portable tool boxes are used for carrying and storing a variety of hand tools. Tool bags are usually made of canvas. Like the boxes, they are available in a variety of sizes and serve similar functions. Typical tool boxes are shown in figure 2-1.

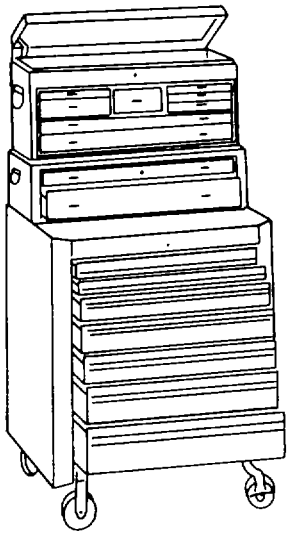

Tool Box Portable
7 Drawers

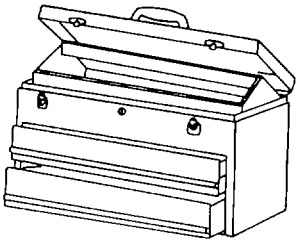

Tool Box Portable
w/4 Fixed Trays

Figure 2-1. Typical Tool Boxes

CHAPTER 3

MEASURING TOOLS

3-1. General. In the maintenance of Army aircraft, the fabrication of many parts may be required. During this process, accurate measurements must be made before and during the fabrication procedure. A partly finished or a finished part must also be checked for accuracy. This inspection includes comparing the dimensions of the workplace with the required dimensions shown on a drawing or sketch. These measurements are made using a variety of measuring tools. The accuracy of the measurements will depend upon the types of tools used and the ability of the aircraft repairer to use them correctly.

3-2. Levels. Levels are tools designed to prove whether a plane or surface is in the true vertical or true horizontal. All levels consist of a liquid-filled glass tube or tubes supported in a frame.

a. Types. There are many types of levels used in aircraft maintenance. Some of these are described below.

(1) Master precision level. The master precision level, shown in figure 3-1, has a ground and graduated main vial. The top and bottom of the level are milled and ground to make sure both surfaces are absolutely parallel. This level is used to determine the true horizontal with the main vial. The true vertical is determined by using the two smaller vials.

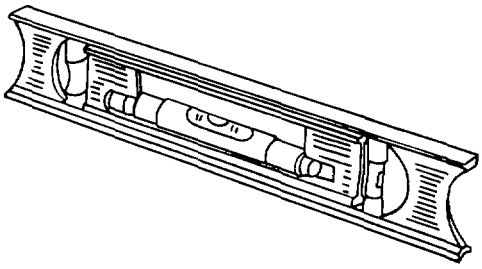

Figure 3-1. Master Precision Level

(2) Machinist's level. The machinist's level, shown in figure 3-2, has an extra large vial. This increases its accuracy and sensitivity. Some of these levels have grooved bottoms which fit over pipes and shafts. They are used in machine shops for leveling work and equipment.

(3) Striding level. The striding level is a machinist's level which is mounted on a raised base. This level, shown in figure 3-3, is used to span existing cabling, piping, or similar obstructions. It is extremely useful in a machine shop for checking the true horizontal of the flatway on a lathe.

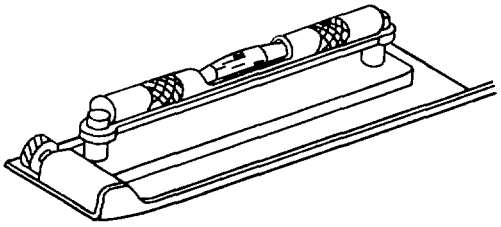

Figure 3-2. Machinist's Level

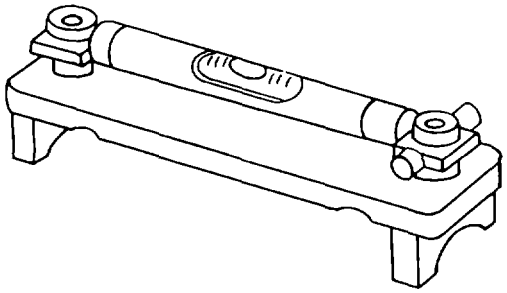

Figure 3-3. Striding Level

(4) Mechanic's level The mechanic's level, shown in figure 3-4, has 3 vials which are mounted horizontally, vertically, and diagonally.

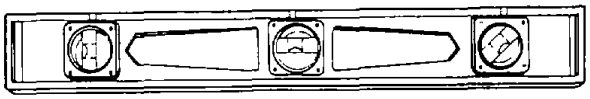

Figure 3-4. Mechanic's Level

b. Use. To use a level, simply place it on the surface to be checked. Inspect the vial which is nearest to the horizontal. If the surface is level, the bubble will be situated between the two etched lines on the vial. A level condition is shown in figure 3-5.

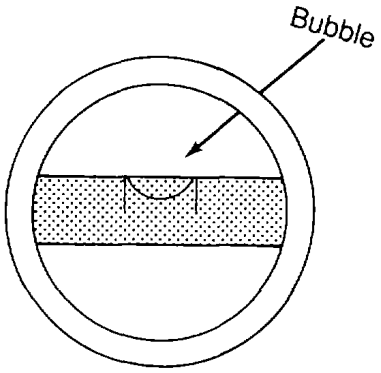

Figure 3-5. Level Condition

c. *Care.* Do not drop or handle a level roughly. To prevent damage, store it in a rack or other suitable place when not in use.

d. *Repair.* Generally speaking, repair of damaged levels is not cost-effective. They are usually replaced.

3-3. Plumb Bobs. A plumb bob is a precision instrument used to establish a true vertical transfer and line-up reference point.

a. *Types.* Plumb bobs are usually made of brass or solid steel, as shown in figure 3-6.

b. *Use.* The correct procedures for the use of the plumb bob is described and illustrated in the applicable maintenance manual.

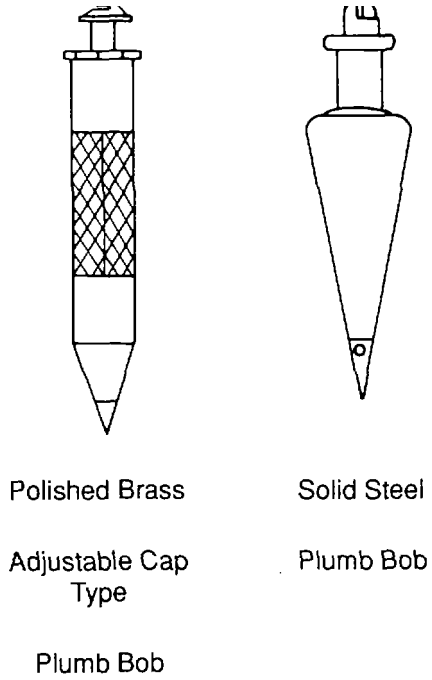

Figure 3-6. Plumb Bobs

c. *Care* Handle plumb bobs with care. Do not use a plumb bob as a hammer or lever. The following guidelines are to be observed when storing plumb bobs.

(1) For short-term storage, lightly coat plumb bobs and threads of removable caps with lubricating oil.

(2) For long-term storage, apply a heavy coat of oil to the threads of removable caps, and to the body of the plumb bob. Wrap the plumb bob in oil-soaked paper.

(3) Store plumb bobs in protective boxes in a dry place.

3-4. Scribers. A scriber is a sharp, hard steel pick. It is used when laying out work on metal as a pencil is used when drawing on paper. A scriber should not be used on Alclad aluminum or aluminum alloy where the scribed line will not later be removed.

a. *Types.* The two basic types of scribers are the machinist's and the tungsten carbide scribers.

(1) Machinist's scriber. The machinist's scriber is used to mark or score on steel, glass, aluminum, copper or similar surfaces. There are two basic types of machinist's scribers; single point pocket, and bent pointstraight point, as shown in figure 3-7.

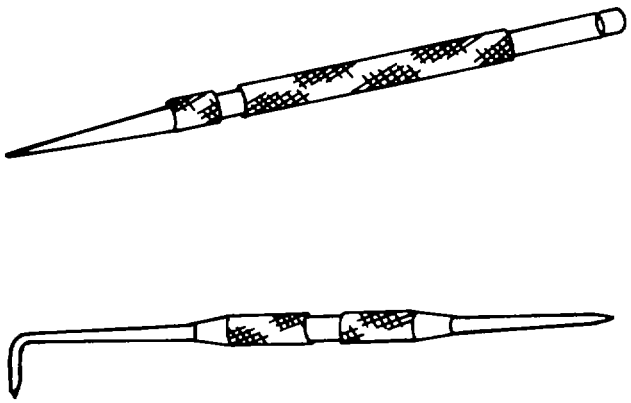

Figure 3-7. Mechanist's Scribers

(2) Tungsten carbide. Tungsten carbide tips have extremely hard points and are used on hardened steel or glass.

b. Use. Following is the basic procedure for the use of a scriber:

(1) Place material to be marked on a firm surface. Place a steel rule or straight edge on the work beside the line to be scribed.

(2) Use fingertips of one hand to hold the straight edge securely. Hold the scriber in your hand as you would a pencil.

(3) Scribe the line by drawing the scriber along the straight edge at a 45-degree angle and tipped in the direction it is being moved.

c. Care. Observe the following practices for the care of scribers:

(1) Protect points by reversing them in the handle or placing a cork or a piece of soft wood over point.

(2) Keep the scribers clean and lightly oiled.

(3) Stow on a rack or in a box. TM 1-1500-204-23-9

(4) Do not use scribers for other than intended purposes.

d. Repair. Scribers can only be repaired by sharpening. Sharpen scriber points with a small oil stone, Federal Specification SS-S-736, moistened with lubrication oil.

3-5. Tapes and Rules. Tapes and rules are the measuring instruments most often used for all general measurements. They are graduated into fractions of an inch that may be expressed as 1/2, 1/4, 1/8, 1/16, 1/32, and 1/64.

a. Tapes. There are several kinds and lengths of tapes, but the one most often used is 6 feet long and made of flexible steel. It is coiled in a circular case and may or may not have one end fastened permanently to the case. It is graduated on one side only in 1/16 and 1/32 inch divisions. A small lip on the end prevents the tape from sliding completely inside the case and also easily lines up the end of the tape with the end of a piece of stock. Examples of typical tapes are shown in figure 3-8.

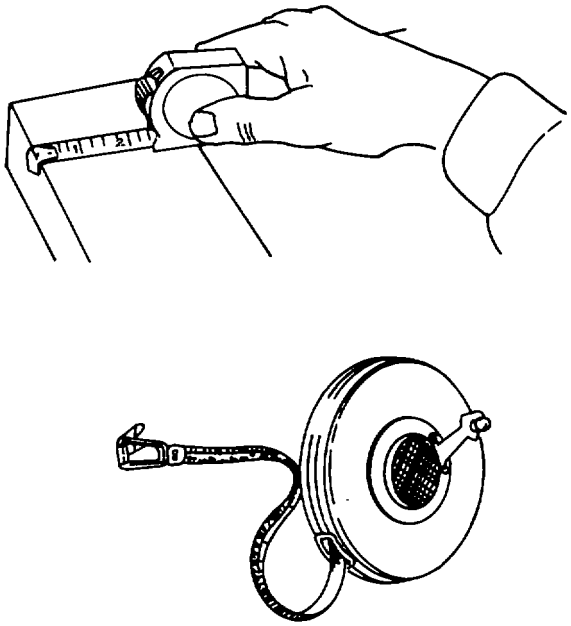

Figure 3-8. Typical Tapes

b. Rules. Rules are usually made of flexible or rigid steel and are 4, 6, or 12 inches long. They are graduated in 1/8, 1/16, 1/32, and 1/64 inch divisions. When the total length of a measurement is not too great, the rule should be used. It is more accurate and easier to read than the tape. A typical rule is shown in figure 3-9.

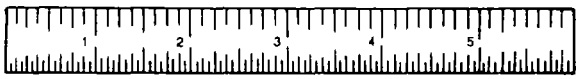

Figure 3-9. Typical Rule

c. Care of Tapes and Rules. To ensure that rules and tapes will always produce reasonably accurate measurements, keep them clean and dry. Store rules and tapes where they will not become bent or damaged.

3-6. Squares. Squares are primarily used for testing and checking trueness of an angle or for laying out lines on materials. Most squares have a rule marked on their edge. As a result they may also be used for measuring.

a. Types. The common types of squares include the carpenter's, try, combination, sliding T-bevel, and the bevel protractor squares.

(1) Carpenter's square. The carpenter's square, shown in figure 3-10, is made up of two parts: the body or blade, and the tongue. It has inches divided into eighths, tenths, twelfths, and sixteenths.

(2) Combination square. A combination square is made of the components shown in figure 3-11.

(a) Rule. The combination square has a slotted 12-inch stainless steel rule (9) which is graduated in eighths, sixteenths, thirty-seconds, and sixty-fourths of an inch. It can be used as a measuring scale by itself or with any one of the following components.

(b) Center head. The center head (5), when attached to the rule, bisects a 90-degree angle. It is used for determining the center of cylindrical work.

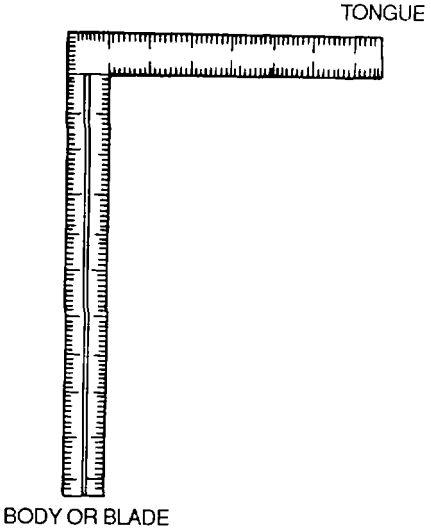

Figure 3-10. Carpenter's Square

(c) Protractor. The protractor (7) has a level (6) and a revolving turret (4) which is graduated in degrees from 0 to 180 or 0 to 90 in either direction. It is used to lay out and measure angles to within one degree.

(d) Square head. The square head (3) has a level (6), a scribe (1), and 45-degree (8) and 90degree (10). It is used to lay out 45and 90-degree angles and to check levelness. It may also be used as a height or depth gauge.

(3) Bevel protractor square. The bevel protractor is made up of an adjustable blade, and a graduated dial which contains a vernier scale. The bevel protractor is used to establish an angle and determine its relationship to other surfaces. The acute angle attachment is used for measuring acute angles accurately. This type of square is shown in figure 3-12.

b. Uses of Squares. The following paragraphs describe the methods for using the various types of squares.

(1) Carpenter's square. In layout of sheet metal or other flat material, the carpenter's square is used to mark a square line, as shown in figure 3-13. To mark a square line, proceed as follows:

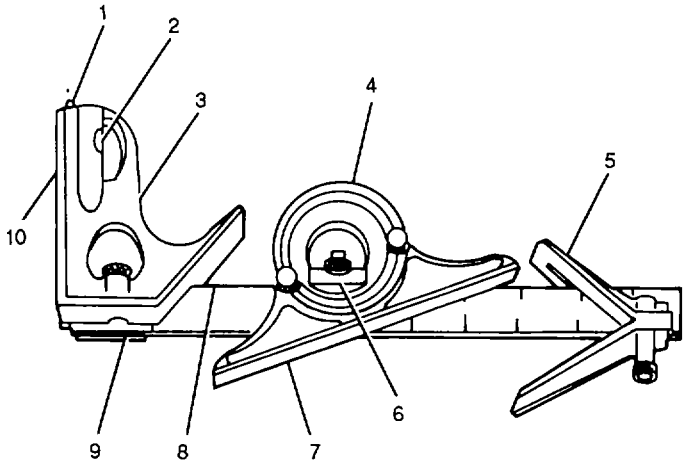

LEGEND

1. SCRIBE
2. LEVEL
3. SQUARE HEAD
4. REVOLVING TURRET
5. CENTER HEAD
6. LEVEL
7. PROTRACTOR
8. 45 DEGREE SIDE
9. RULE
10. 90 DEGREE SIDE

Figure 3-11. Combination Square

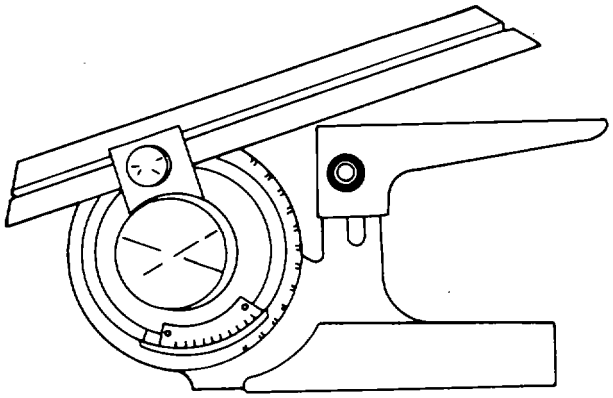

Figure 3-12. Bevel Protractor

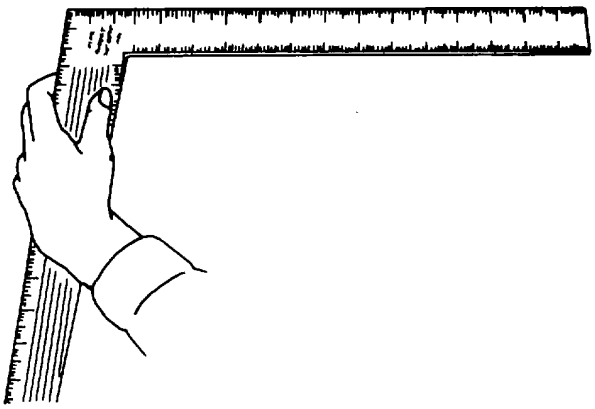

Figure 3-13. Marking a Square Line

(a) Place the blade or tongue of the square against the side of the material with the square tilted slightly so the blade or tongue of the square extends across the work.

CAUTION

Do not mark on any metal surface with a graphite pencil. Graphite is cathodic and will establish the basic for galvanic corrosion.

(b) Mark a line across the work using a marking pencil, MIL-P-83953.

(2) Combination square. The uses of the various parts of the combination square are described in the following paragraphs.

(a) Center head. The center head can be used to locate and mark the diameter of a cylinder.

1 As shown in figure 3-14, slide the center head on the rule and fasten by tightening the setscrew.

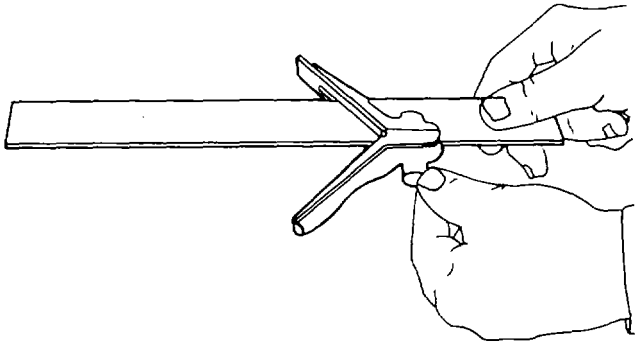

Figure 3-14. Setting the Center Head

CAUTION

Do not mark on any metal surface with a graphite pencil. Graphite is cathodic and will establish the basic for galvanic corrosion.

2 Push the center head against the cylinder, as shown in figure 3-15.

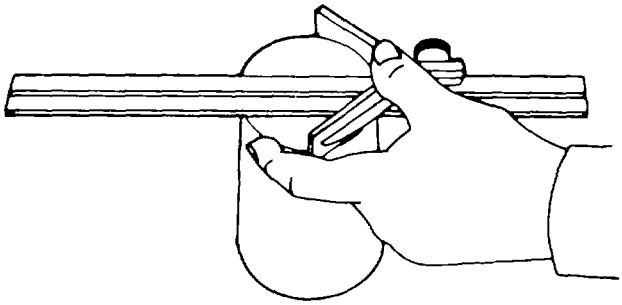

Figure 3-15. Locating Diameter of Cylinder

3 Mark the diameter on the cylinder using a marking pencil, MIL-R-83953, by drawing a straight line along the inside edge. Make sure the square does not slip while marking. This is shown in figure 3-16.

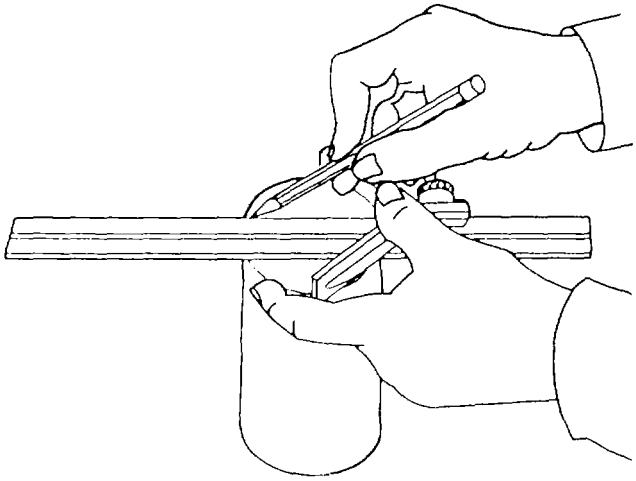

Figure 3-16. Marking Diameter of Cylinder

(b) Protractor head. The protractor head can be used to determine the angle of a previously marked line.

1 Slide the protractor head on the rule as shown in figure 3-17, and tighten the setscrew.

2 Loosen the protractor adjustment screws so the protractor may be pivoted about the rule, as shown in figure 3-18.

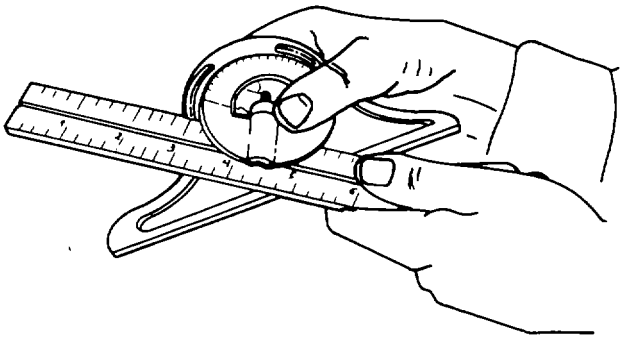

Figure 3-17. Installing Protractor Head on Rule

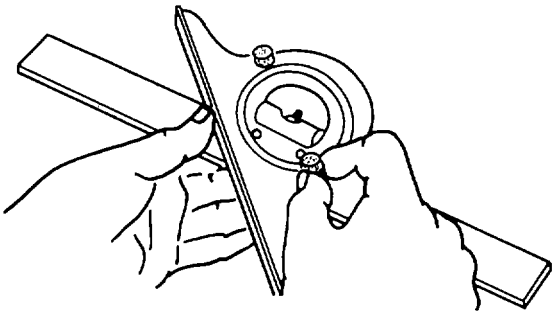

Figure 3-18. Loosening Protractor Adjustment Screws

3 Place the rule on the angle being measured and pivot the protractor head against the edge. Tighten adjustment screws. See figure 3-19.

4 Read the measured angle on the protractor.

(c) Square head. The square head can be used to determine depth.

1 Slide the square head on the rule.

2 Set the flat surface of the square head above the edge and adjust the rule until it hits the bottom, as shown in figure 3-20.

3 Tighten the setscrew.

4 Remove the square and read the depth indicated on the rule.

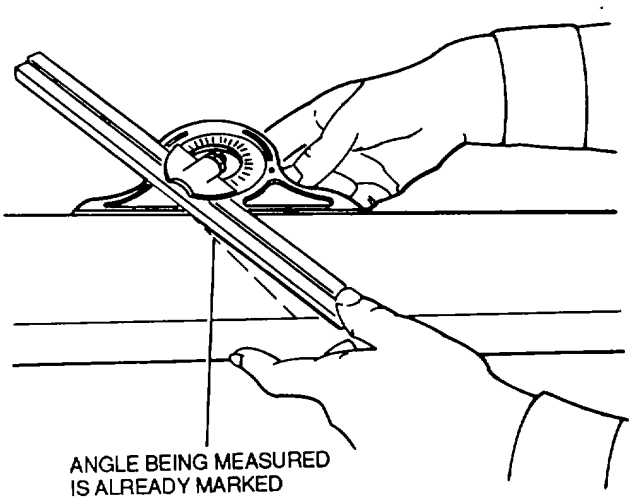

Figure 3-19. Checking Angle

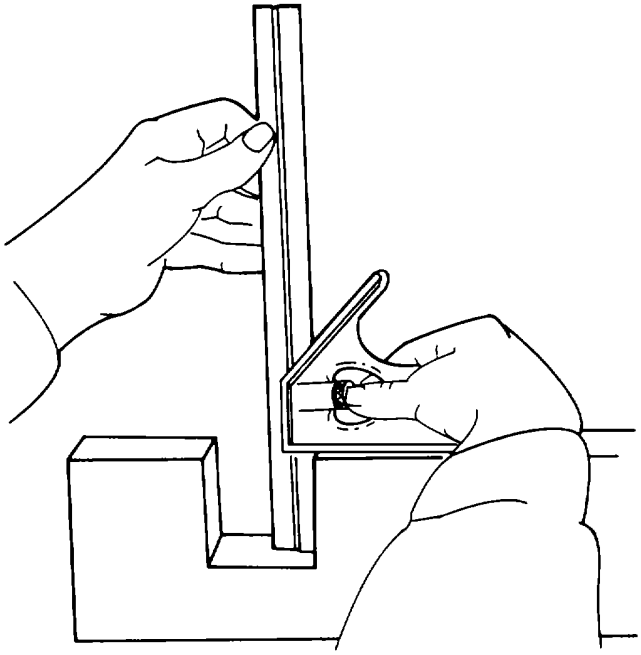

Figure 3-20. Determining Depth with the Square Head

(5) Bevel protractor. The bevel protractor is used much the same as the protractor head of the combination square.

c. Care of Squares. Squares can be maintained by observing some common precautions:

(1) Make sure squares are kept clean.

(2) Apply a light coat of oil to all metal surfaces after using.

(3) If a stock is loose, replace the square. False measurements can be made if the stock is able to move slightly.

3-7. Dividers. Dividers are tapered steel picks hinged together on the blunt end. They are used to scribe arcs and circles and to transfer measurements when laying out work. They are also used to transfer or compare measurements directly from a rule.

a. Types. The most common types of dividers are the spring divider and the wing divider, which are described in the following paragraphs.

(1) Spring divider. A spring divider consists of two sharp points at the end of straight legs, held apart by a spring and adjusted by means of a screw and nut. The spring divider is available in sizes from 3 to 10 inches in length. It is shown in figure 3-21.

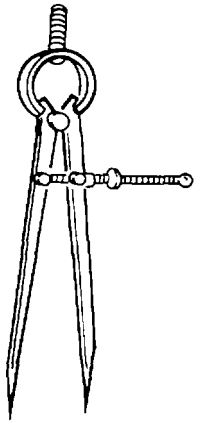

Figure 3-21. Spring Divider

(2) Wing divider. A wing-type divider has a steel bar that separates the legs, a lock nut for setting a rough measurement, and an adjustment screw for fine adjustments. The wing-type divider is available in 6, 8, and 12 inch lengths, and is shown in figure 3-22.

Figure 3-22. Wing Divider

b. Use of Dividers. Dividers can be used to scribe a circle by using the following procedures (see figure 3-23):

(1) Set the desired radius on the dividers using the appropriate graduations on a rule.

(2) Place the point of one of the divider legs on the point to be used as the center.

(3) Lean the dividers in the direction of movement and scribe the circle by revolving the dividers.

c. Care of Dividers. The following procedures describe the care and maintenance of dividers:

(1) Keep dividers clean and dry.

(2) Store dividers where they will not become bent or broken.

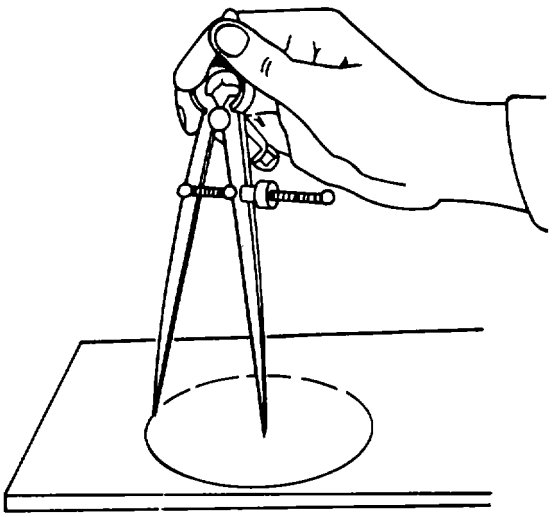

Figure 3-23. Scribing a Circle with Dividers

(3) Sharpen divider points with a small oil stone, Federal Specification SS-S-736, moistened with engine oil, MIL-L-6082. Keep points toward inside of legs so that points meet when legs are closed. Hold dividers stationary and stroke with oil stone.

3-8. Calipers. Calipers are used to measure diameters. Outside calipers measure outside diameters. Inside calipers measure inside diameters. Simple calipers are used along with a scale to find the measurement. Slide calipers and vernier calipers have their own scales. They are more accurate than a ruler, and when used properly with a micrometer, they can be used to take measurements to within 0.0001 inch.

a. Types of Calipers. There are a variety of caliper styles available to the aircraft repairer. The following paragraphs describe these types.

(1) Simple calipers. The simple outside calipers are bowlegged. Those used for inside diameters have straight legs with feet turned outward. Calipers are adjusted by pulling or pushing the legs to open or close them. This type is shown in figure 3-24.

(2) Spring-joint calipers. The spring-joint calipers have the same type of legs, but are joined by a strong spring hinge, screw, and adjustment nut. They are shown in figure 3-25.

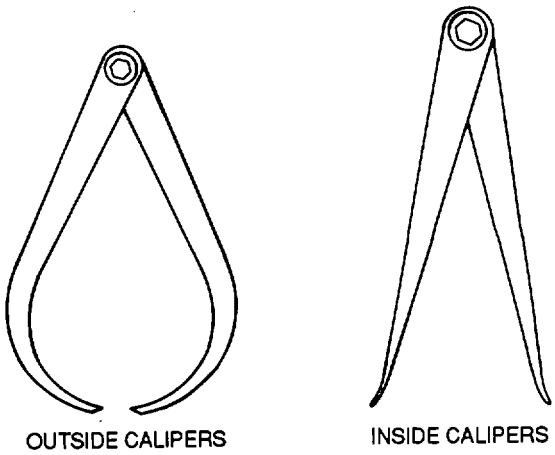

Figure 3-24. Simple Calipers

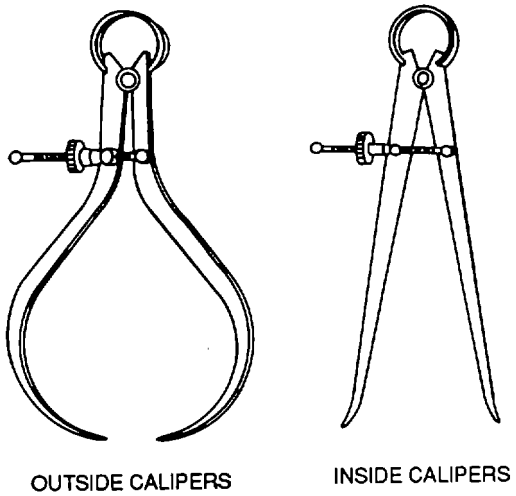

Figure 3-25. Spring-Joint Calipers

(3) Transfer calipers. Transfer calipers are used for measuring chamfered grooves or flanges. A screw attaches a small auxiliary leaf to one of the legs, as shown in figure 3-26. The measurement is made as with ordinary calipers. The leaf is locked to the leg. The legs may be opened or closed as needed to clear the obstruction. The legs are then brought back and locked to the leaf, restoring them to the original setting.

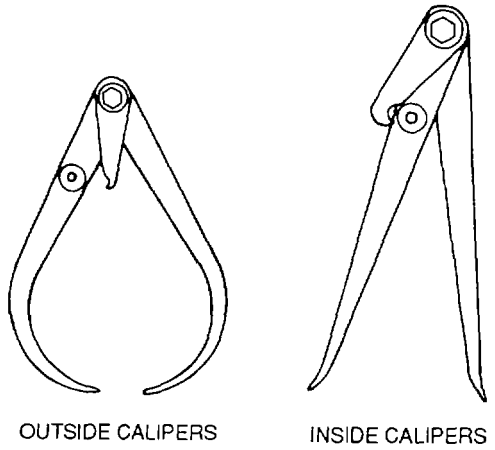

Figure 3-26. Transfer Calipers

(4) Hermaphrodite calipers. The hermaphrodite calipers have one straight leg ending in a sharp point, as shown in figure 3-27. On some models this point is removable. This leg is usually bowlegged. This caliper is used for finding shaft centers or locating shoulders.

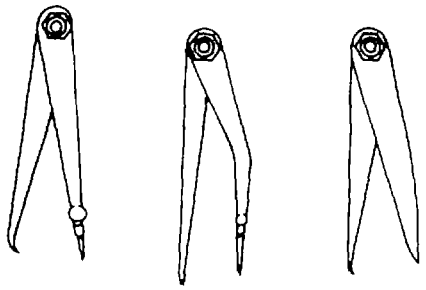

Figure 3-27. Hermaphrodite Calipers

(5) Slide calipers. Slide pocket calipers have a fixed jaw fastened to the end of a bar and a movable jaw fastened to a frame which slides on this bar. The bar has a scale on it and the frame has two index marks labeled IN and OUT (see figure 3-28). To measure the outside diameter of a round bar or the thickness of a flat bar, the jaws of the caliper are opened and placed over the stock. The movable jaw is then slid forward until the jaws just touch the stock. The calipers may then be removed and the dimension opposite the OUT index mark can be read. To take an inside measurement, the jaws are placed inside and spread apart until they just touch the stock. The dimension may then be read as before, using the IN index mark.

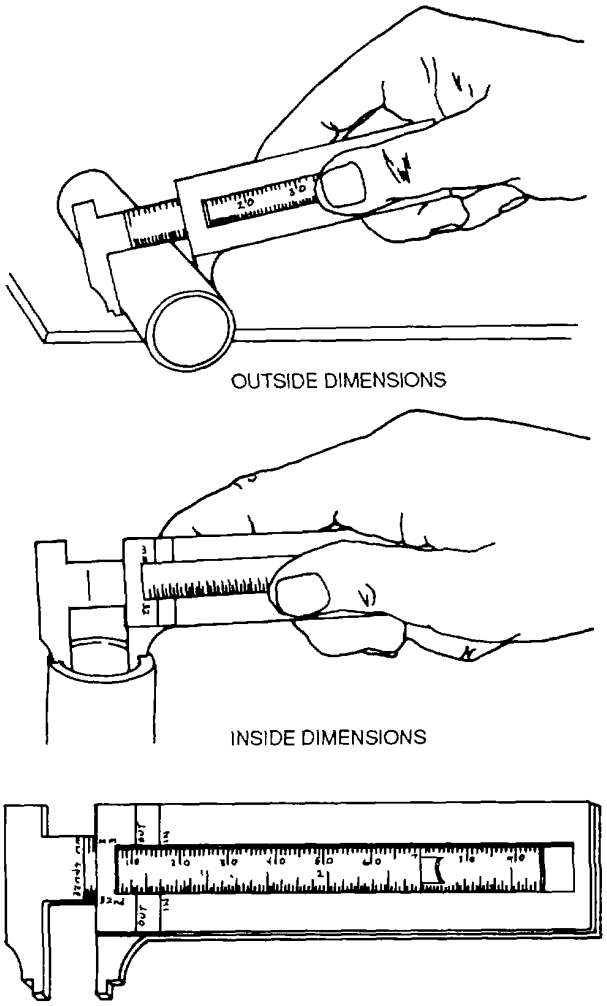

Figure 3-28. Slide Caliper

(6) Vernier calipers. Vernier calipers work like slide calipers. Shown in figure 3-29, vernier calipers can make very accurate outside or inside measurements.

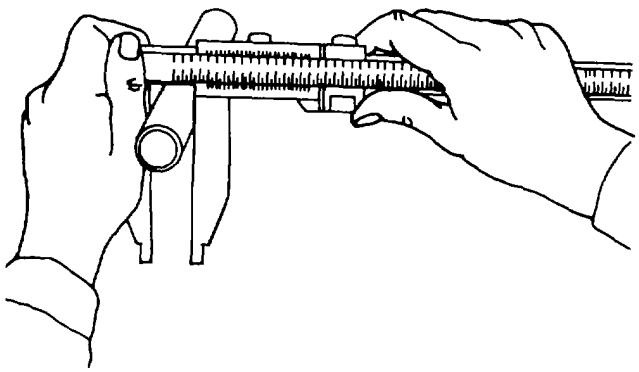

Figure 3-29. Vernier Caliper

(7) Trammels. The trammel, shown in figure 3-30, measures distances beyond the range of calipers. The instrument consists of a rod or beam to which trams are clamped. The trams carry chucks. The trammel can also be used as a divider by changing the points.

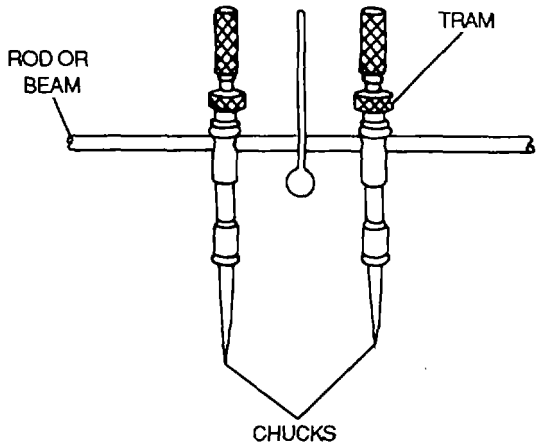

Figure 3-30. Trammel

b. Use of Calipers. The operation of most calipers is relatively straightforward. Vernier calipers, however, can be finely adjusted to provide a very accurate reading. The following paragraphs describe the procedures used to make accurate measurements with vernier calipers (see figure 3-31):

(1) Loosen the two locking screws (1) and (2). TM 1-1500-204-23-9

(2) Move the movable jaw (5) along the rule until the desired position is obtained.

(3) Retighten the locking screw (2) to secure the movable jaw.

(4) Make fine adjustments to the vernier scale (4) with the adjustment control (3).

(5) Tighten locking screw (1) and read caliper in accordance with the following paragraphs.

c. Reading a Vernier Caliper. To read a vernier caliper, the steel rule and the vernier scales must be understood. These are shown in figure 3-32.

(1) Steel rule. The steel rule (1) is graduated in 0.025 inch. Every fourth division (representing 1/10 inch) (3) is numbered.

(2) Vernier scale. The vernier scale (2) is divided into 25 parts and numbered 0, 5, 10, 15, 20, and 25. These 25 parts are equal to 24 parts on the steel rule (1). The difference between the width of one of the 25 spaces on the vernier scale (2) and one of the 24 spaces on the steel rule (1) is 1/1000 inch.

(3) Reading the measurement. Read the measurement as outlined below:

Read the number of whole inches on the top scale (5) to the left of the vernier zero index (6) and record..... 1.000 inch

Read the number of tenths (4) to the left of the vernier zero index (6) and record .... .0.400 inch

Read the number of twenty-fifths (7) between the tenths mark (4) and the vernier zero index (6) and record 3 x 0.025 = 0.075 inch

Read the highest line on the vernier scale (2) which lines up with the lines on the top scale (5) and record. (Remember that 1/25 = 0.001 inch) . ..... 11/25 = 0.011 inch

Total all preceding measurements1.486 inches

The measurement, therefore, is 1.486 inches.

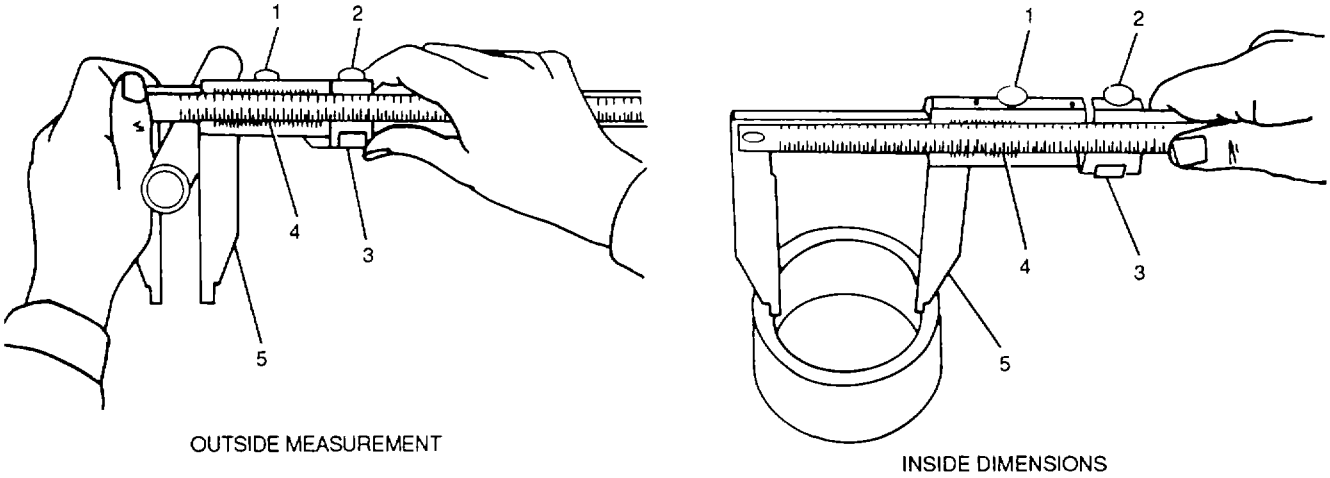

LEGEND

1. LOCKING SCREW
2. LOCKING SCREW
3. ADJUSTMENT CONTROL
4. VERNIER SCALE
5. MOVABLE JAW

Figure 3-31. Operation of Vernier Calipers

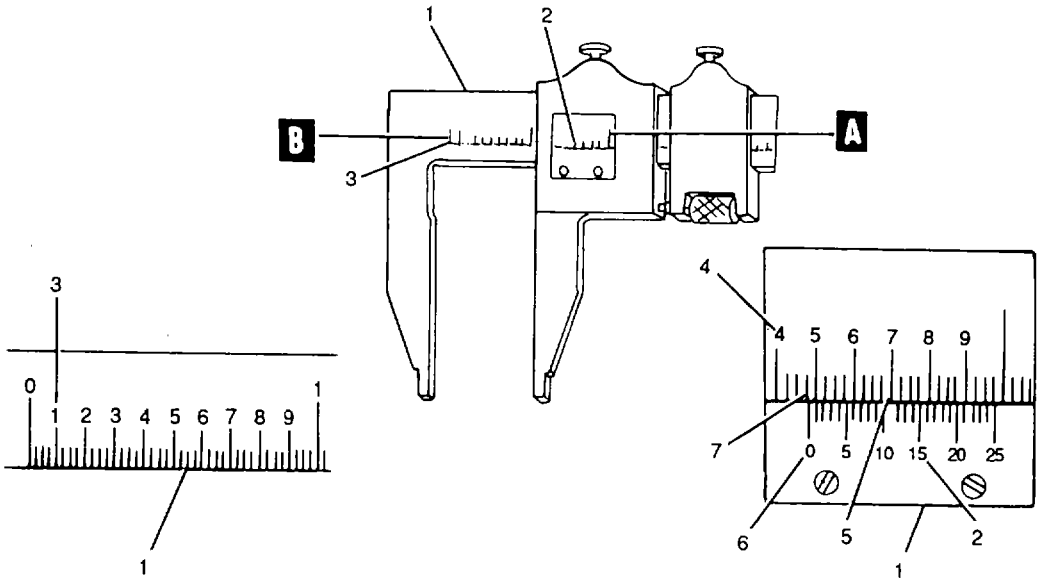

LEGEND

1. STEEL RULE
2. VERNIER SCALE
3. 1/10 INCH DIVISION
4. 1/10 INCH DIVISION
5. TOP SCALE
6. VERNIER ZERO INDEX
7. 1/25 INCH DIVISION

Figure 3-32. Reading a Measurement on a Vernier Caliper

(4) Conversion for inside measurement. Most vernier calipers read OUTSIDE on one side and INSIDE on the other side. If a scale is not marked, and an inside measurement must be taken, read the scale as for an outside measurement. Then add the measuring point allowance by referring to the instructions of the manufacturer or the following:

SIZE OF CALIPER	ENGLISH MEASURE	METRIC MEASURE
6 inch or 150 mm	0.250 inch	6.35 mm
12 inch or 300 mm	0.300 inch	7.62 mm
24 inch or 600 mm	0.300 inch	7.62 mm
36 inch or 600 mm	0.500 inch	12.70 mm

(5) Reading a metric caliper. The following paragraphs describe the procedure for reading a metric caliper (see figure 3-33).

(a) Steel rule. The steel rule (3) is divided into centimeters (cm) (1). The longest lines represent 10 millimeters (mm) each. Each millimeter is divided into quarters.

(b) Vernier scale. The vernier scale (4) is divided into 25 parts and is numbered 0, 5, 10, 15, 20, and 25.

(c) Reading the measurement. Read the measurement as outlined below:

Read the total number of millimeters (2) to the left of the vernier zero index (6) and record.....32.00 cm

Read the number of quarters (5) between the millimeter mark and the vernier zero index (6) and record ....1 quarter = 0.25 mm

Read the highest line on the vernier scale (4) which lines up with a line on the top scale (7) and record .....0.18 mm

Total all preceding measurements 32.43 mm

The measurement, therefore, is 32.43 millimeters

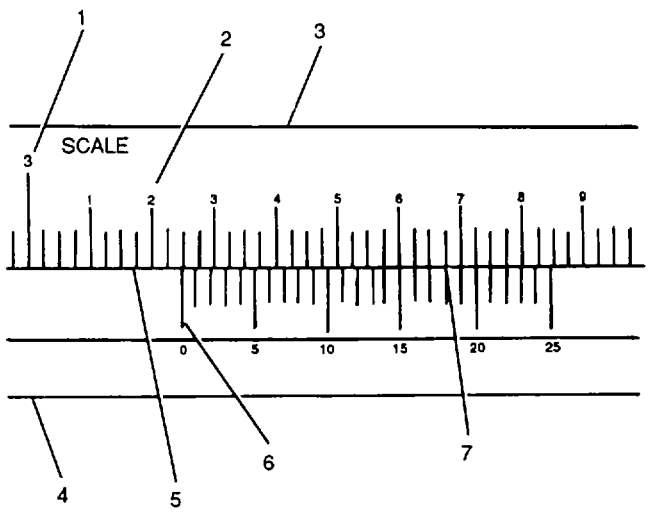

LEGEND

1. CENTIMETER DIVISION
2. MILLIMETER DIVISION
3. STEEL RULE
4. VERNIER SCALE
5. 1/4 MILLIMETER DIVISION
6. VERNIER ZERO INDEX
7. TOP SCALE

Figure 3-33. Reading a Metric Caliper

(6) Conversion for inside measurement. If the metric caliper is not marked for inside or outside measurements, refer to (4) above for the measuring point allowance for inside measurements.

d. Care of Calipers. Following are general guidelines for the care of all calipers:

(1) Coat metal parts of all calipers with a light coat of oil to prevent rust.

(2) Store calipers in separate containers provided.

(3) Keep graduations and markings on all calipers clean and legible.

(4) Do not drop any caliper. Small nicks or scratches can cause inaccurate measurements.

(5) Protect caliper points from damage.

3-9. Micrometers. The micrometer is the most accurate of the adjustable measuring instruments. The internal parts of a micrometer are not cut on a lathe, but are ground to size on a machine grinder.

a. *Types*. There are three types of micrometers which are most commonly used: the outside micrometer; the inside micrometer; and the depth micrometer.

(1) Outside micrometer. An outside micrometer, shown in figure 3-34, is used more often than any other type. It is used to measure the outside diameter of shafts, thickness of stock, and to make other, similar measurements. It is also used to set inside calipers to a given dimension.

(2) Inside micrometer. An inside micrometer is used to measure the inside diameters of cylinders, the width of recesses, and similar work. A typical inside micrometer is shown in figure 3-35.

(3) Depth micrometer. A depth micrometer, shown in figure 3-36, is used to measure the depth of recesses or holes.

b. Selection. The types of micrometers commonly used are made so that the longest movement possible between the spindle and the anvil is 1 inch. This movement is called the range. The size of a micrometer indicates the size of the largest work it will measure. Therefore, a 2-inch micrometer has a range from 1 inch to 2 inches, and will measure only work between 1 and 2 inches thick. A 6-inch micrometer has a range from 5 to 6 inches, and will measure only work between 5 and 6 inches thick. It is necessary, therefore, that the mechanic first find the approximate size of the work to the nearest inch, and then select a micrometer that will fit it. With inside and depth micrometers, rods of suitable lengths, as shown in figure 3-37, are fitted into the tool to get the approximate dimension within an inch, after which the exact dimension is obtained by turning the thimble, as shown in figure 3-38.

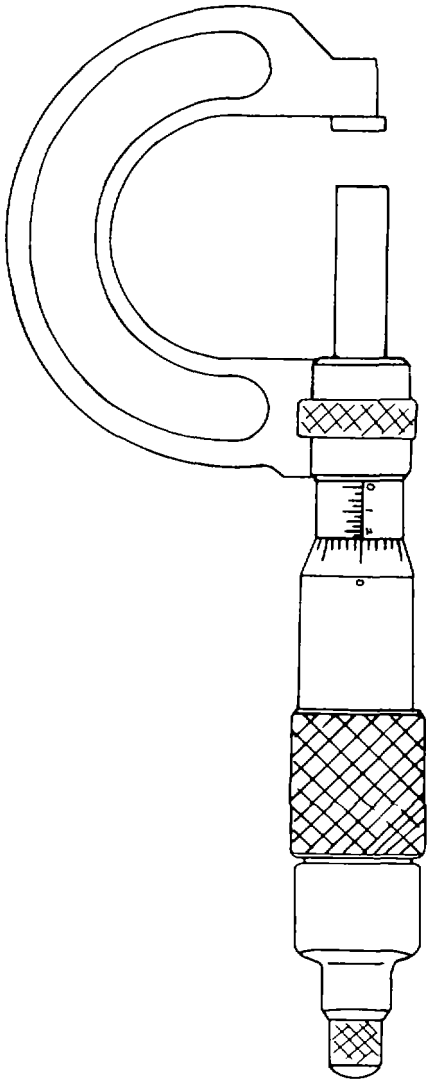

Figure 3-34. Outside Micrometer

Figure 3-35. Inside Micrometer

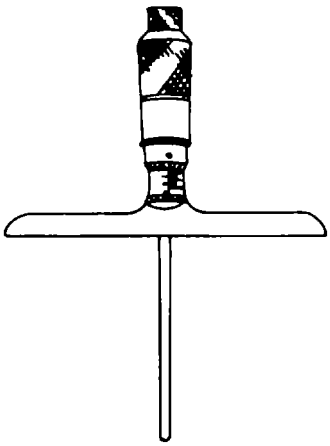

Figure 3-36. Depth Micrometer

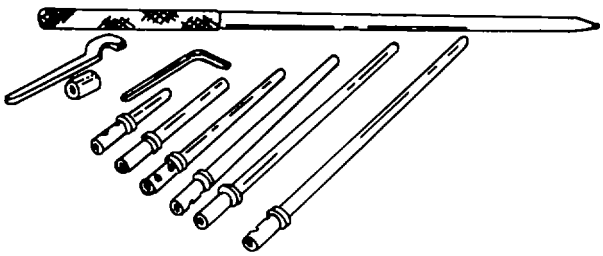

Figure 3-37. Extension Rods for Inside and Depth Micrometers

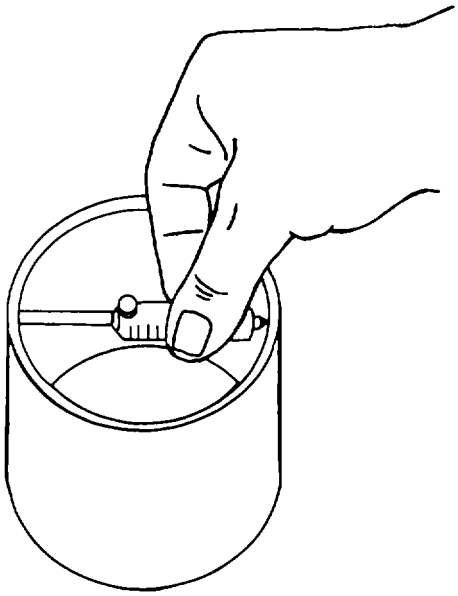

Figure 3-38. Using Inside Micrometer

c. Use. The following paragraphs discuss the basic use of the outside and inside micrometers.

(1) Outside micrometer. As shown in figure 3-39, the micrometer is held in one hand and the stock in the other. The thimble is turned until the anvil and spindle just touch the stock. The micrometer is then read for an accurate measurement.

(2) Inside micrometer. The normal procedure in using an inside micrometer is to set it across a diameter or between the inside surfaces, remove it, and then read the dimension. For this reason, the thimble on an inside micrometer is much stiffer than on a micrometer caliper it holds the dimension well. It is good practice to verify the reading of an inside micrometer by measuring it with a micrometer caliper.

(a) Technique. Figure 3-40 shows an inside micrometer with extension rod being used to check the diameter of a bored hole. Note the arrows which indicate the direction the operator is feeling for the largest dimension horizontally and the smallest dimension vertically. Inside micrometers have spherical contact points which require more practice to feel the full measurement of the diameter. One contact point is generally held in a fixed position and the other rocked in different directions to

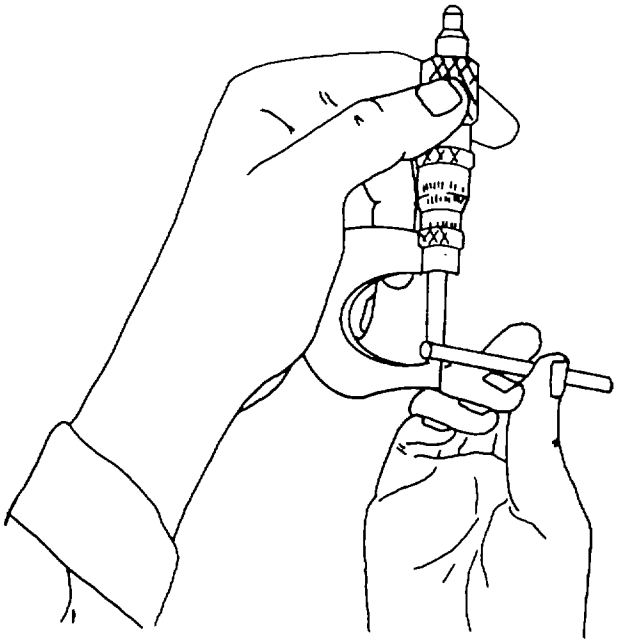

Figure 3-39. Using Outside Micrometer

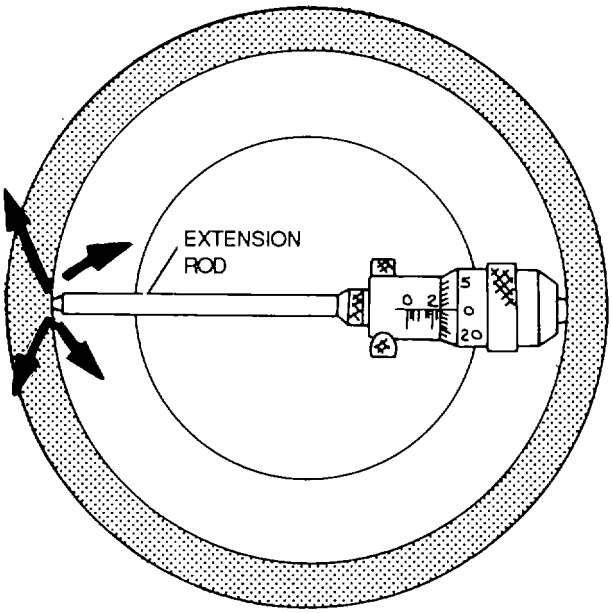

Figure 3-40. Using Inside Micrometer with Extension Rod

be sure the tool is spanning the true diameter of a hole or the correct width of a slot.

(b) Handle attachment. For probing a deep hole or a restricted place, a handle attachment may be used. The handle clamps on to the body of the micrometer.

d. Reading a Standard Micrometer. Reading a micrometer is a matter of reading the micrometer scale or counting the revolutions of the thimble, and adding to this any fraction of a revolution (see figure 3-41).

(1) Spindle movement. The micrometer screw has 40 threads per inch. This means that one complete and exact revolution of the thimble (3) moves the spindle (2) toward or away from the anvil (1) exactly 1/40 or 0.025 inch.

(2) Barrel measurements. The following paragraphs describe the markings which are inscribed on the micrometer barrel and thimble (see figure 3-42).

(a) Barrel lines. The lines on the barrel (1) conform to the pitch of the micrometer screw under the

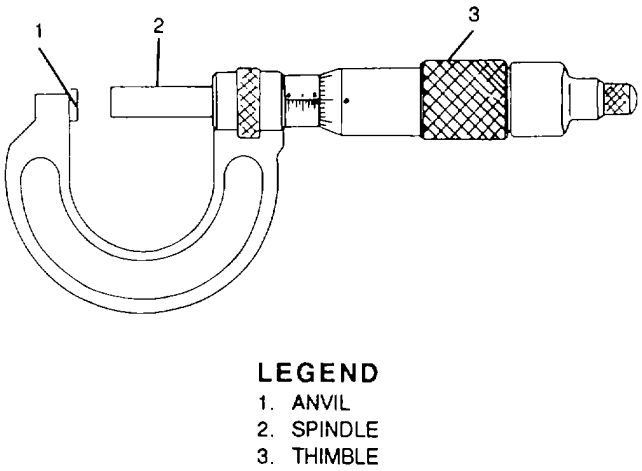

Figure 3-41. Parts of a Micrometer

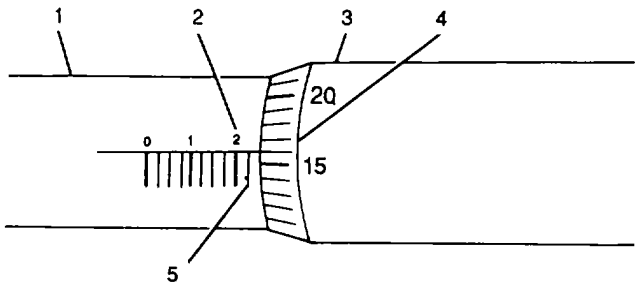

LEGEND

1. BARREL
2. 0.1 INCH DIVISIONS
3. THIMBLE
4. 0.001 INCH DIVISIONS
5. 0.025 INCH DIVISIONS

Figure 3-42. Reading a Measurement on a Micrometer

thimble (3). Each line represents 0.025 inch (5), and each fourth line is numbered, representing tenths of an inch (2).

(b) Thimble lines. The beveled edge of the thimble is graduated into 25 parts, each line representing 0.001 inch (4). One complete and exact revolution of the thimble will indicate 0.025 inch. Every fifth line is numbered to assist in reading these marks.

(3) Reading a measurement. A measurement can be read as follows:

Read the highest whole number visible on the barrel (2) and record..... 2 = 0.200 inch

Count the number of lines visible between the 2 and the thimble edge (5) and record ..... 1 = 0.025 inch

Locate the line on the thimble (3) that coincides with or has passed the horizontal line in the barrel (4) and record ..... 16 = 0.016 inch

Total all preceding measurements..... 0.241 inch

The measurement, therefore, is 0.241 inch.

e. Reading a Vernier Micrometer. Reading the vernier micrometer is the same as reading the standard micrometer. A vernier micrometer is shown in figure 3-43. An additional step must be taken, to add the vernier reading to the dimensions. This allows for precise measurements which are accurate to 1/10,000 (0.0001) of an inch. This scale furnishes the fine readings between the lines on the thimble rather than making an estimate as you would on a standard micrometer.

(1) Vernier scale. The ten spaces on the vernier scale (2) are equivalent to 9 spaces on the thimble (3). Therefore, each unit on the vernier scale is equal to 0.0009 inch and the difference between the sizes of the units on each scale is 0.0001 inch.

(2) Reading the measurement. A measurement can be read as follows:

Read the highest whole number visible on the barrel (6) and record..... 2 = 0.200 inch

Count the number of lines visible between the 2 on the barrel and the thimble edge (5) and record ..... 3 = 0.075 inch

Locate the line on the thimble (3) that coincides with or has passed the horizontal line in the barrel (4) and record ..... 11 = 0.011 inch

Locate the line on the vernier scale (2) that coincides with a division line on the thimble (3) and record ..... 2 = 0.0002 inch

Total all preceding measurements..... 0.2862 inch

The measurement, therefore, is 0.2862 inch

f. Reading a Metric Micrometer. The same principle is applied in reading the metric graduated micrometer, but some changes in graduations are used. These graduations are shown in figure 3-44.

(1) Spindle movement. The pitch of the micrometer screw under the thimble is 0.05 millimeters (mm). One revolution of the thimble advances or withdraws the spindle a distance equal to 0.5 mm.

(2) Barrel graduations. The barrel (1) is graduated in millimeters from 0 to 25. It takes two revolutions of the thimble to move the barrel 1 mm.

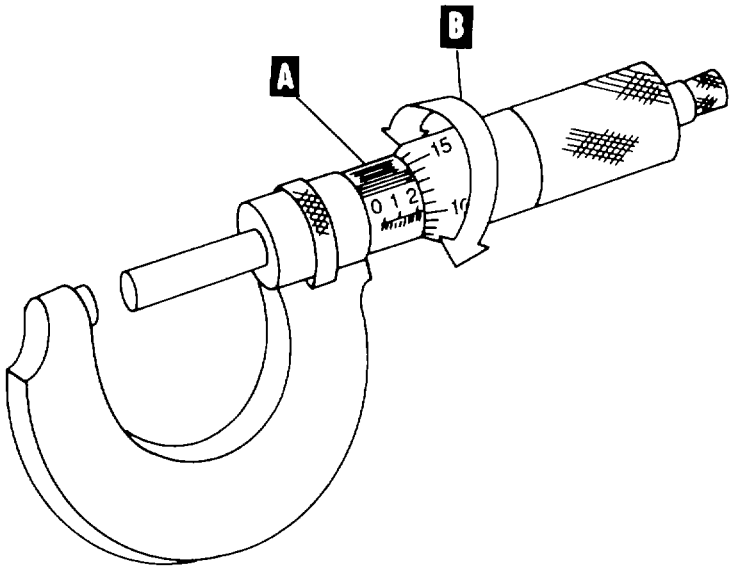

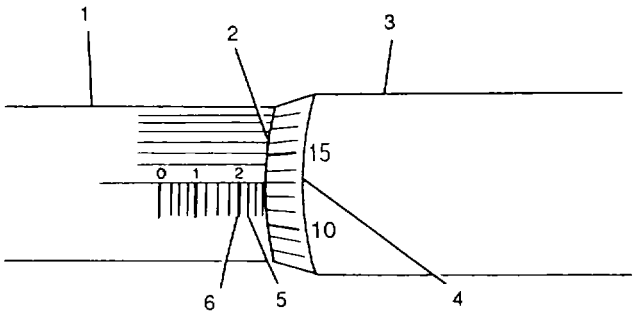

DETAIL A

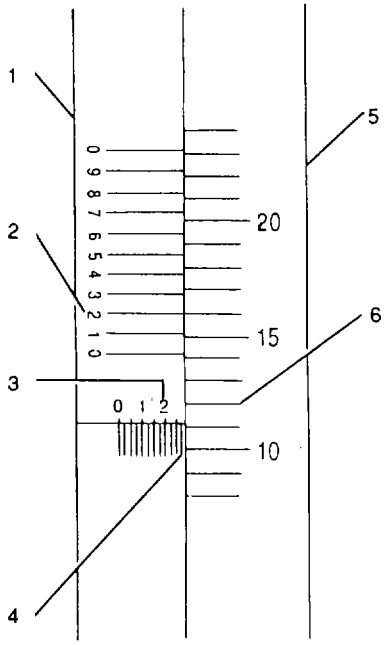

DETAIL B

(VIEW SHOWS SCALES FLATTENED FOR CLARITY)

LEGEND

1. BARREL
2. VERNIER SCALE
3. THIMBLE
4. 0.001 INCH DIVISIONS
5. 0.0025 INCH DIVISIONS
6. 0.1 INCH DIVISIONS

Figure 3-43. Reading a Vernier Micrometer

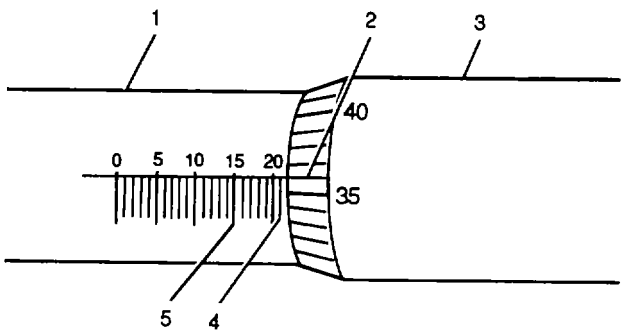

LEGEND

1. BARREL
2. 0.01 MILLIMETER DIVISION
3. THIMBLE
4. 1.0 MILLIMETER DIVISION
5. 5. MILLIMETER MULTIPLE DIVISIONS

Figure 3-44. Reading a Metric Micrometer

(3) Thimble graduations. The thimble (3) is graduated in 50 divisions with every fifth line being numbered. Each line represents a distance of 1/100, or 0.01 mm.

(4) Reading a measurement. A measurement can be read as follows:

Read the highest whole number visible on the barrel (5) and record ..... 20 = 20.0 mm

Count the number of lines visible between the 20 and the thimble edge (4) and record 2 = 2.0 mm

Locate the line on the thimble (3) that coincides with or has passed the horizontal line in the barrel (2) and record ..... 36 = 36/100 = 0.36 mm

Total all preceding measurements ..... 22.36 mm

The measurement, therefore, is 22.36 millimeters.

g. Transferring Measurements from Inside Caliper or Inside Micrometer to Micrometer Caliper. When it becomes necessary to transfer a measurement from an inside caliper to an outside caliper, perform the following procedures: TM 1-1500-204-23-9

(1) After setting inside caliper or inside micrometer to the work, hold the micrometer caliper in one hand and the inside tool in the other hand.

(2) Turn the thimble of the micrometer caliper with the thumb and forefinger until the inside tool legs lightly contact the anvil and spindle of the micrometer caliper.

(3) Hold the tips of the inside tool legs parallel to the axis of the micrometer caliper spindle.

(4) The micrometer caliper will be accurately set when the inside tool will just pass between the anvil and spindle by its own weight.

h. Micrometer Adjustment and Testing. At times it may become necessary to adjust and/or test the accuracy of a micrometer.

(1) Adjustment. Micrometer may be adjusted to compensate for thread wear. Adjust as follows.

(a) Unscrew thimble from barrel.

(b) Tighten the thread play adjustment nut on the fixed nut a fraction of a turn at a time.

(c) Test the fit of the micrometer screw in the fixed nut.

(d) Repeat the tightening and test in the fixed nut until the operation is free from binding and play.

(2) Testing. A micrometer is tested for accuracy as follows:

(a) Clean the measuring faces with a soft cloth and examine the faces for any lint left by the cloth.

(b) Measure the length of the micrometer test gauge of the same length as the minimum capacity of the micrometer.

(c) The micrometer should read the exact measurement.

(d) For the 1-inch micrometer, screw the thimble down until the spindle contacts the anvil. The reading should be 0.000 inch.

(e) Measure the length of the micrometer test gauge of the same length as the maximum capacity of the micrometer.

(f) The micrometer should read its exact maximum capacity.

i. Care of Micrometers. Observe the following practices for the care and upkeep of micrometers:

(1) Coat metal parts of all micrometers with a light coat of oil to prevent rust.

(2) Store micrometers in their separate containers provided by the manufacturer.

(3) Keep graduations and markings on all micrometers clean and legible.

(4) Never drop any micrometer. Small nicks or dents can cause inaccurate measurements.

3-10. Surface Gauge. A surface gauge is a measuring tool used to transfer measurements to work by scribing a line, and to indicate the accuracy or parallelism of surfaces.

a. Description. As shown in figure 3-45, the surface gauge consists of a base with an adjustable spindle to which may be clamped a scriber or an indicator. Surface gauges are made in several sizes and are classified by the length of the spindle. The smallest spindle is 4 inches long, the average 9 to 12 inches, and the largest 18 inches. The scriber is fastened to the spindle with a clamp. The bottom and the front end of the base of the surface gauge have deep V-grooves. The grooves allow the gauge to measure from a cylindrical surface. The base has two gauge pins. They are used against the edge of a surface plate or slot to prevent movement or slippage.

b. Adjustment. The spindle of a surface gauge may be adjusted to any position with respect to the base and tightened in place with the spindle nut. The rocker adjusting screw provides for the finer adjustment of the spindle by pivoting the spindle rocker bracket. The scriber can be positioned at any height and in any desired direction on the spindle by tightening the scriber nut. The scriber may also be mounted directly in the spindle nut mounting, in place of the spindle, and used where the working space is limited and the height of the work is within range of the scriber.

c. Setting Height on a Surface Gauge. To set a surface gauge for height, proceed as follows:

(1) Wipe off the top of a layout table or surface plate and the bottom of the surface gauge.

(2) Place the squaring head of a combination square on a flat surface as shown in figure 3-46.

NOTE

If a combination square is not available, use a rule with a rule holder. A rule alone cannot be held securely without wobbling, and consequently an error in setting generally results.

(3) Secure the rule in the squaring head so that the end of the rule is in contact with the surface.

(4) Move the surface gauge into position, and set the scriber to the approximate height required, using the adjusting clamp that holds the scriber onto the spindle.

(5) Make the final adjustment for the exact height required with the adjusting screw on the base of the gauge.

d. Care of Surface Gauge. Observe the following practices for the care and upkeep of surface gauges:

(1) Coat all metal parts of the gauge with a light coat of oil to prevent rust.

(2) Carefully store the gauge in the separate container provided by the manufacturer.

(3) Do not drop any surface gauge. Small nicks and scratches can result in inaccurate measurements.

(4) Protect all pointed parts from damage.

3-11. Depth Gauges. Depth gauges are used to measure the distance from a surface to a recessed point.

a. Types. The three common types of depth gauges are the rule depth gauge, the micrometer depth gauge, and the vernier depth gauge.

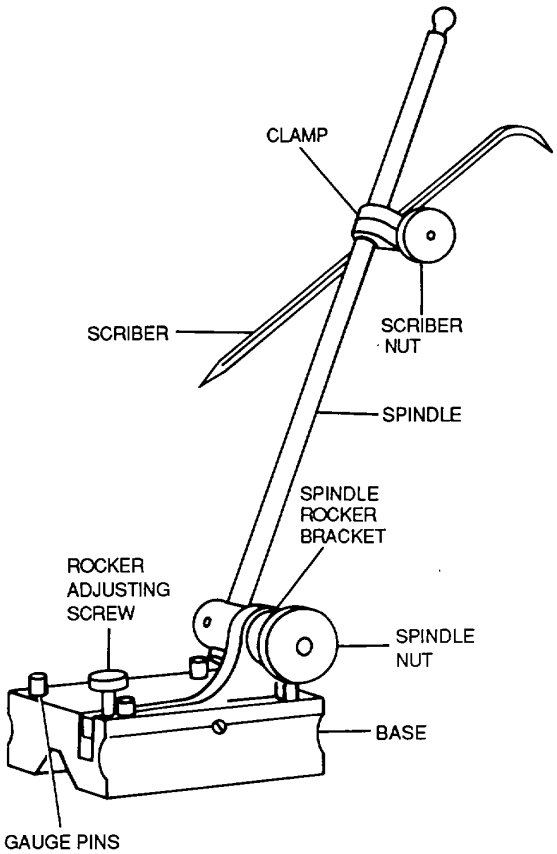

Figure 3-45. Surface Gauge

(1) Rule depth gauge. The rule depth gauge, shown in figure 3-47, is a graduated rule with a sliding head designed to bridge a hole or slot, and hold the rule perpendicular to the surface from which the measurement is taken. This type has a measuring range from 0 to 5 inches. The sliding head has a clamping screw so that it may be clamped in any position. The sliding head is flat and perpendicular to the axis of the rule and ranges in size from 2 to 2 5/8 inches wide and from 1/8 to 1/4 inch thick.

(2) Micrometer depth gauge. The micrometer depth gauge, shown in figure 3-48, consists of a flat base attached to the barrel of a micrometer head. These gauges have a range from 0 to 9 inches, depending on the length of extension rod used. The hollow micrometer screw itself has a range of either 1/2 or 1 inch. Some are provided with a ratchet stop. The flat base ranges in size from 2 to 6 inches. Several extension rods are normally supplied with this type of gauge.

(3) Vernier depth gauge. The vernier depth gauge, shown in figure 3-49, consists of a graduated scale, either 6 or 12 inches long, and a sliding head similar to the one on the vernier caliper. The sliding head is especially designed to bridge holes and slots. The vernier depth gauge has the range of the rule depth gauge and not quite the accuracy of a micrometer depth gauge. It cannot enter holes less than 1/4 inch in diameter, whereas a micrometer depth gauge will enter a 3/32-inch hole. However, it will enter a 1/32-inch slot, whereas a micrometer depth gauge will not. The vernier scale is adjustable and may be adjusted to compensate for wear.

b. Operation of Depth Gauges. The following paragraphs describe operating procedures for each of the depth gauge types described above.

(1) Rule depth gauge. To measure the depth of a hole or slot with reasonable accuracy, proceed as follows:

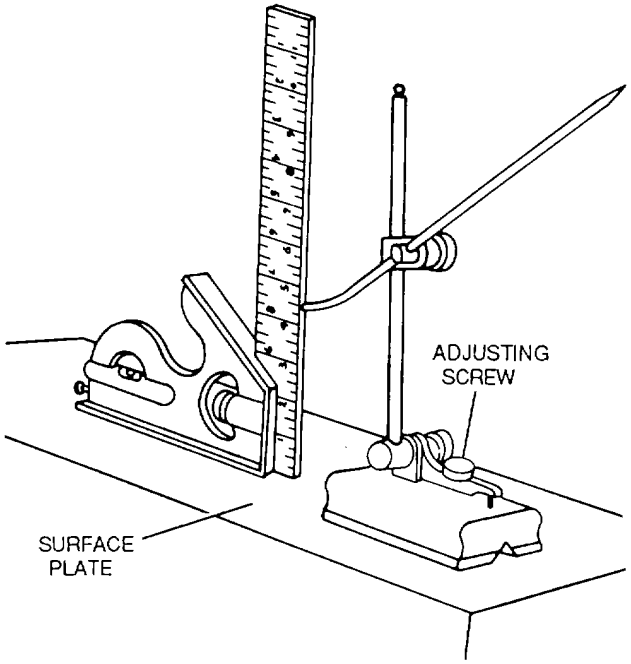

Figure 3-46. Setting Height on a Surface Gauge

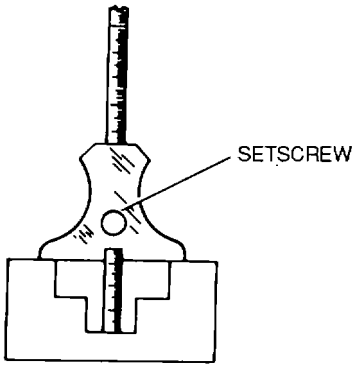

Figure 3-47. Rule Depth Gauge

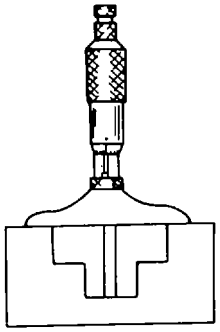

Figure 3-48. Micrometer Depth Gauge

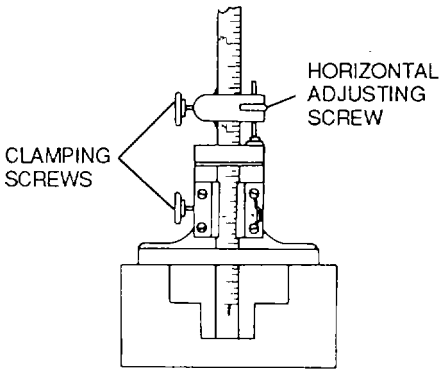

Figure 3-49. Vernier Depth Gauge

(a) Hold the body of the depth gauge against the surface from which the depth is to be measured.

(b) Extend the rule into the hole or slot.

(c) Tighten the setscrew to maintain the setting.

(d) Withdraw the tool from the work and read the depth on the rule.

(2) Vernier depth gauge. *To measure the depth of a hole or* slot with more accuracy than is possible with a rule depth gauge, proceed as follows:

(a) Place the vernier depth gauge over the slot, as shown in figure 3-50.

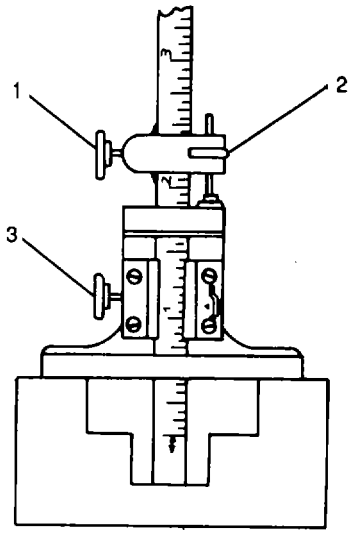

LEGEND

1. CLAMPING SCREW
2. HORIZONTAL ADJUSTING SCREW
3. CLAMPING SCREW

Figure 3-50. Using a Vernier Depth Gauge

(b) With clamping screws (1) and (3) loose, slide the rule down into the slot being measured until it is almost in contact.

(c) Tighten clamping screw (1) to make the horizontal adjusting screw (2) operative.

(d) With the horizontal adjusting screw (2), adjust the rule to the first sense of contact between the end of the scale and the bottom of the slot.

(e) Secure the setting with clamping screw (3).

(f) Read the scale in accordance with paragraph 3-8c.

(3) Micrometer depth gauge. To measure the depth of a hole or slot with even more accuracy than is possible with either the vernier or the rule depth gauges, proceed as follows:

(a) Place the micrometer depth gauge over the slot.

(b) Adjust the thimble until the contact of the spindle causes the ratchet stop to slip.

(c) Remove the micrometer from the work and read in accordance with paragraph 3-9.

NOTE

If extension rods are used, the total depth reading will be the sum of the length of the rods plus the reading on the micrometer.

c. Care of Depth Gauges. Observe the following practices for the care and upkeep of depth gauges:

(1) Coat all metal parts of depth gauges with a light coat of oil to prevent rust.

(2) Carefully store depth gauges in separate containers provided by the manufacturer.

(3) Keep graduations and markings clean and legible.

(4) Do not drop any depth gauge. Small nicks and scratches can result in inaccurate measurements.

3-12. Height Gauges. Height gauges are used to measure the vertical distance of a point from a surface, as shown in figure 3-51.

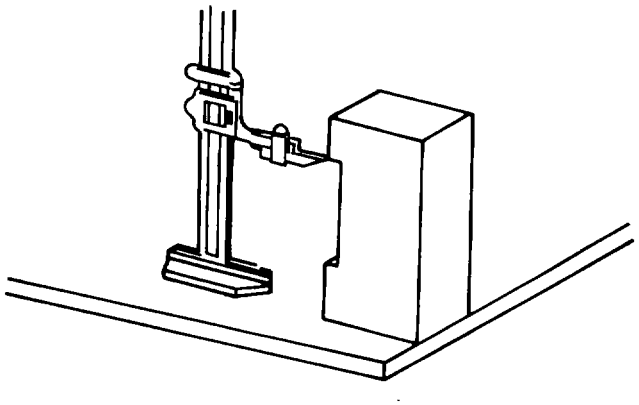

Figure 3-51. Typical Height Gauge

a. Operation. Height gauges usually have vernier scales, and are operated similarly to depth gauges, as outlined in paragraph 3-11b(2). The clamping screws ensure that the measuring arm will not slip after the gauge is removed from the object being measured.

b. Care. Observe the following practices for the care and upkeep of height gauges:

(1) Coat all metal parts of height gauges with a light coat of oil to prevent rust.

(2) Carefully store height gauges in separate containers provided by manufacturer.

(3) Keep graduations and markings clean and legible.

(4) Do not drop any height gauge. Small nicks and scratches can cause inaccurate measurements.

3-13. Thread Gauges. Thread gauges are used to determine the pitch and number of threads per inch on threaded fasteners. They consist of leaves whose edges are toothed to correspond to standard threads. A typical thread gauge is shown in figure 3-52.

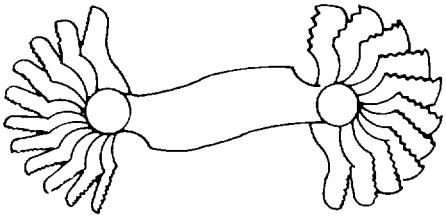

Figure 3-52. Thread Gauge

a. Use. To measure the unknown pitch of a thread, compare it with the standard of the thread gauge. Various leaves are held to the threads until an exact fit is found, as shown in figure 3-53.

b. Reading. The number of threads per inch is indicated on the leaf which is found to exactly match the threads being measured. Using this value as a basis, correct sizes of nuts, bolts, screws, taps, and dies are selected for use.

c. Care. Observe the following practices for the care and upkeep of thread gauges:

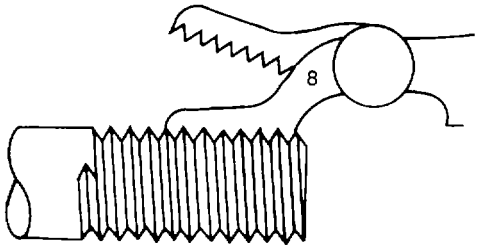

GAUGING EXTERNAL THREAD

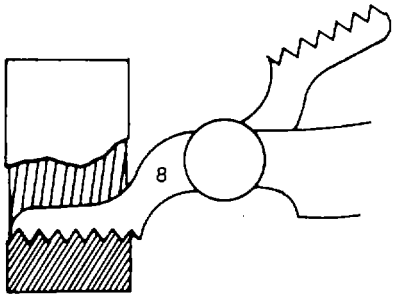

GAUGING INTERNAL THREAD

Figure 3-53. Using Thread Gauges

(1) Coat metal parts of thread gauges with a light film of oil to prevent rust.

(2) Store gauges in separate containers.

(3) Keep graduations and markings clean and legible.

(4) Do not drop thread gauges. Small nicks and scratches will result in inaccurate measurements.

3-14. Plug Gauges. Thread gauges provide a fast and reliable method of determining whether internal and external threads match. One disadvantage of their use is that part of the thread tolerance must be built into the thread gauge. For more precise measurement of thread pitch, plug gauges are used.

a. Use. GO and NO GO plug gauges are used to inspect internal threads. They are available as separate tools or with both ends combined in one tool, as shown in figure 3-54. Threads are inspected as follows:

(1) GO gauge. For an internal thread to be accepted, the GO plug gauge must pass through the entire length of the thread.

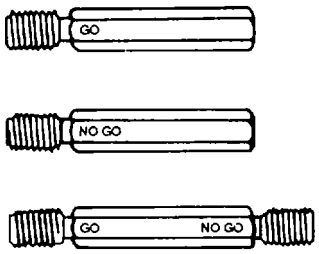

Figure 3-54. Plug Gauges

(2) NO GO gauge. An internal thread within limits must not accept the NO GO gauge past 1 1/2 turns.

b. Care. Ensure that plug gauges are carefully handled, as the threads are machined to within very fine tolerances, and any damage will alter the accuracy of the measurements. Observe the following additional practices for the care and upkeep of plug gauges:

(1) Coat metal parts with a light film of oil to prevent rust.

(2) Store gauges in separate containers provided by the manufacturer.

3-15. Ring Gauges. Ring gauges, shown in figure 3-55, are used as standards to determine whether or not one or more dimensions of a manufactured post are within specified limits. They are nonadjustable, and therefore called fixed gauges.

a. Description. The ring gauge is an external gauge of circular form. For sizes between 0.059 and 0.510 inch, ring gauges are made with a hardened bushing pressed into a soft body. The thickness of the gauge ranges from 3/16 to 1 5/16 inches. Ring gauges made for diameters of 0.510 to 1.510 inches are made in one piece, without the hardened bushing. Gauges ranging in diameter from 1.510 to 5.510 inches are made with a flange, as shown in figure 3-56, which reduces the weight and makes them easier to handle. There are two types of ring gauges; the GO and the NO GO gauges (see figure 3-57).

(1) GO ring gauges. GO ring gauges are larger than NO GO gauges. The outer surface of the ring is knurled.

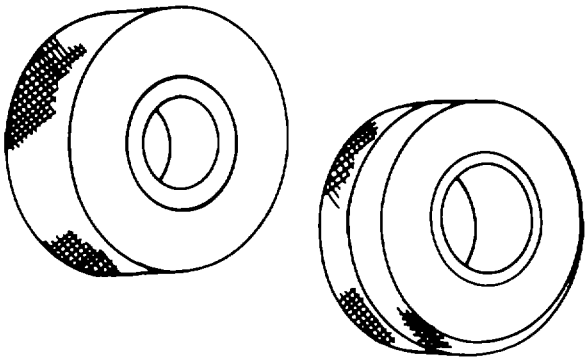

Figure 3-55. Ring Gauges

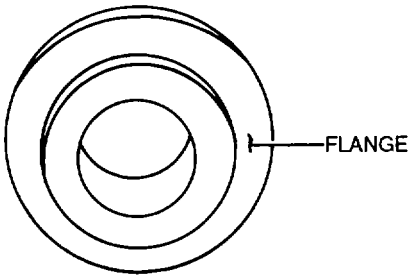

Figure 3-56. Flanged Ring Gauge

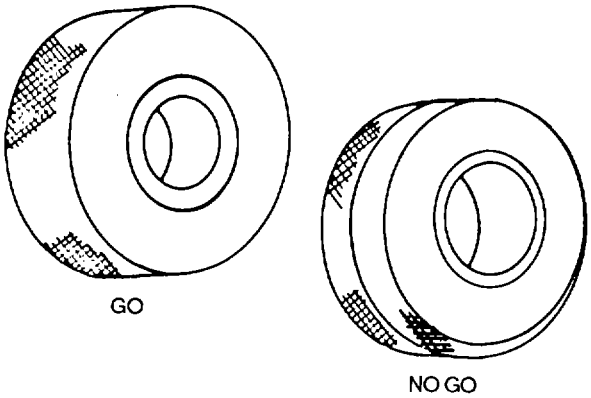

Figure 3-57. Ring Gauge Types

(2) NO GO ring gauges. The NO GO gauges are slightly smaller than GO gauges, and are distinguished by an annular groove cut in the knurled outer surface of the ring.

b. Tolerances. Depending on the use, ring gauges are manufactured to different tolerances. The following classes of gauges and their limits of accuracy are standard for all makes:

Class X- Precision lapped to close tolerances for many types of masters and the highest quality working and inspection gauges.

Class Y- Good lapped finish to slightly increased tolerances.

Class Z- Commercial finish (ground and polished, but not fully lapped) with fairly wide tolerances.

Class ZZ- Ground only to meet the demand for an inexpensive gauge, with liberal tolerances.

Tolerances for ring gauges in each class are listed in table 3-1.

c. Use. Ring gauges are used more often in the inspection of finished parts than parts in process. The reason for this is that the finished parts are usually readily accessible; whereas, parts in a machine that are supported at both ends would have to be removed to be checked. A part such as a pivot stud is checked by performing the following procedures (see figure 3-58):

(1) Line the stud up with the hole in the GO gauge, and gently press it in. If the stud will not go in, the shank is too large. If it will go in, the stud is not oversize.

(2) With the stud in the hole, check the piece for taper and out-of-roundness by gently shaking it and sensing any wobble.

(3) After checking the part in the GO gauge, check it in the NO GO gauge. If the stud is within desired limits, it will not go into the gauge.

NOTE

The GO ring gauge controls the maximum dimension of a part and NO GO plug gauges control the minimum dimension of a hole. Therefore, GO gauges control the tightness of fit of mating parts and NO GO gauges control the looseness of fit of mating parts.

Table 3-1. Ring Gauge Tolerances

To and Above	Including	x[1]	y[2]	z[3]	ZZ[4]
0.029	0.825	0.00004	0.00007	0.00010	0.00020
0.825	1.510	0.00006	0.00009	0.00012	0.00024
1.510	2.510	0.00008	0.00012	0.00016	0.00032
2.510	4.510	0.00010	0.00015	0.00020	0.00040
4.510	6.510	0.00013	0.00019	0.00025	0.00050
6.510	9.010	0.00016	0.00024	0.00032	0.00064
9.010	12.010	0.00020	0.00030	0.00040	0.00080

[1] Precision lapped
[2] Lapped
[3] Ground or polished (grinding marks may be in evidence)
[4] Ground only

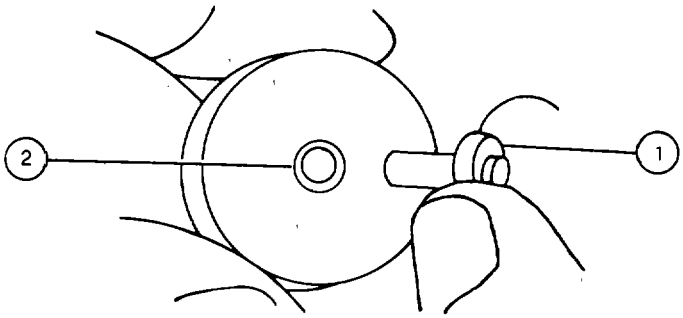

STEP 1. INSERT PART INTO GO GAUGE.

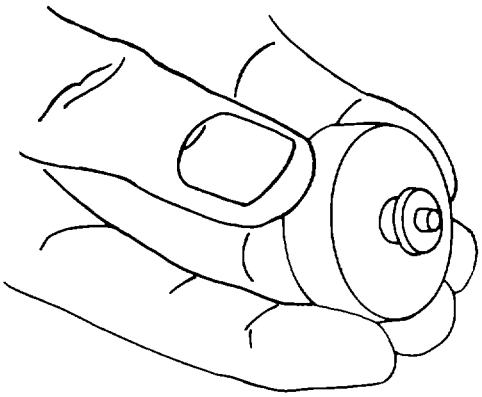

STEP 2. CHECK FOR LOOSENESS BY GENTLY SHAKING.

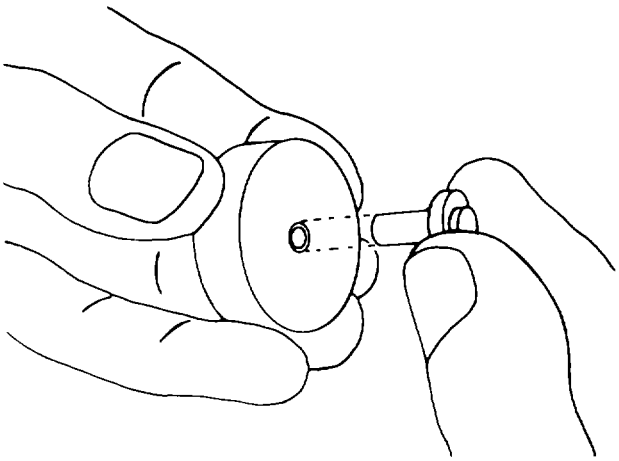

STEP 3. ATTEMPT TO INSERT PART INTO NO GO GAUGE.

Figure 3-58. Using Ring Gauges

d. Care. Observe the following practices for the care and upkeep of ring gauges:

(1) Always make certain that the surfaces of the parts gauged and the gauge itself are kept free from abrasives, dirt, grit, chips, and all foreign matter.

(2) Always consider the abrasive action of the part on the gauge. Cast iron, steel, and cast aluminum are more abrasive than brass, bronze, and nonmetals such as plastics. Use particular care when gauging cast iron, steel, and cast aluminum.

(3) When gauges are stored, arrange them neatly in a drawer or case so that they do not contact other tools or each other.

(4) Always hold the gauges in your hands when checking. Never clamp them in a vise.

(5) At frequent intervals, check all gauges for accuracy and wear with gauge blocks or master gauges.

3-16. Snap Gauges. Snap gauges, shown in figure 3-59, are used as standards to determine whether or not one or more dimensions of a manufactured post are within specified limits.

a. Description. The snap gauge is made in two general types, the nonadjustable and the adjustable.

(1) *Nonadjustable*. The nonadjustable type is a solid construction, having two gauging members, GO and NO GO, as shown in figure 3-60. The part to be inspected is first tried on the GO side and then the gauge is reversed and the part is tried on the NO GO side. Some solid snap gauges, shown in figure 3-61, have combined gauging members in the same set of jaws as shown above, known as a progressive snap gauge. The outer member gauges the GO dimension, and the inner member the NO GO dimension.

(2) *Adjustable*. Three standard designs of the adjustable type are available, consisting of a light, rigid frame with adjustable gauging pins, buttons, or anvils. These pins or buttons may be securely locked in place after adjustment, and locking screws are tightened to hold the gauging dimensions.

(a) *First type*. One type of adjustable snap gauge is made in sizes that range from 1/2 to 12 inches. It is equipped with four gauging pins and is suitable for checking the dimension between surfaces. It is shown in figure 3-62.

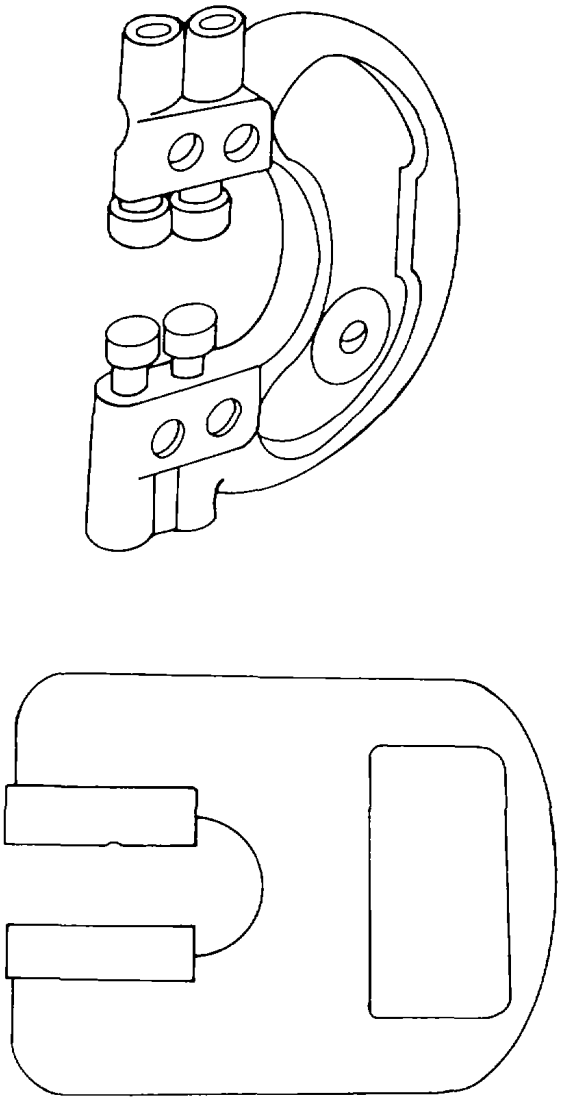

Figure 3-59. Snap Gauges

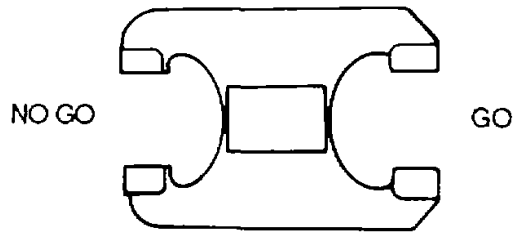

Figure 3-60. Solid Nonadjustable Snap Gauge

(b) Second type. Another type is made in sizes that range from 1/2 to 11-1/4 inches. It is equipped with four gauging buttons and is suitable for checking flat or cylindrical work. This type is shown in figure 3-63.

(c) Third type. The third type is made in sizes from 1/2 to 11-5/8 inches. Shown in figure 3-64, it is equipped with two gauging buttons and a single block anvil, and is especially suitable for checking the diameters of shafts, pins, studs, and hubs.

b. Tolerances. Depending on the use, snap gauges are manufactured to different tolerances. The following classes of gauges and their limits of accuracy are standard for all makes:

Class X Precision lapped to close tolerances for many types of masters and the highest quality working and inspection gauges.

Class Y Good lapped finish to slightly increased tolerances.

Class Z Commercial finish (ground and polished, but not fully lapped) with fairly wide tolerances.

Tolerances for snap gauges in each class are listed in table 3-2.

c. Using an Adjustable Snap Gauge. The following paragraphs describe the procedures for setting the snap gauge, and measuring flat and cylindrical parts.

(1) Setting the snap gauge. Before an adjustable snap gauge can be used to check parts, the GO and NO GO buttons, pins, or anvils must be set to the proper dimensions.

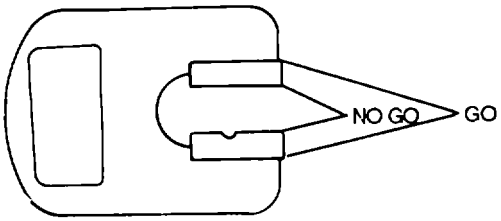

Figure 3-61. Progressive Snap Gauge

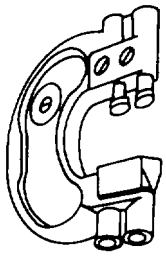

Figure 3-63. Snap Gauge for Checking Flat or Cylindrical Work

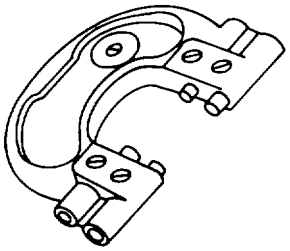

Figure 3-62. Snap Gauge for Checking Dimension Between Surfaces

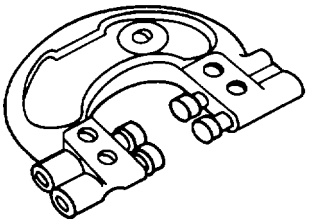

Figure 3-64. Snap Gauge for Checking Diameters

Table 3-2. Snap Gauge Tolerances

Above	To and Including	X[1]	Y[2]	Z[3]
0.029	0.825	0.00004	0.00007	0.00010
0.825	1.510	0.00006	0.00009	0.00012
1.510	2.510	0.00008	0.00012	0.00016
2.510	4.510	0.00010	0.00015	0.00020
4.510	6.510	0.00013	0.00019	0.00025
6.510	9.010	0.00016	0.00024	0.00032
9.010	12.010	0.00020	0.00030	0.00040

[1] Precision lapped
[2] Lapped
[3] Ground or polished (grinding marks may be in evidence)

(a) Clamp the snap gauge in a vise or a holder.

CAUTION

To prevent damage to the gauge from the jaws of the vise, cover the jaws of the vise with blocks of wood or sheets of soft metal, such as brass.

NOTE

This procedure describes adjusting the GO dimension first; however, either the GO or the NO GO dimension may be adjusted first.

(b) As shown in figure 3-65, turn the locking screw (2) and turn the adjusting screws (1) until the dimension is set (3).

NOTE

The desired dimension may be taken from a master disc, a precision gauge block, or a master plug.

(c) Turn the other adjusting screw until the NO GO dimension is set.

(d) Tighten the locking screws with the master precision piece still in place.

(e) Remove the master precision piece.

(f) Recheck the gauge to make sure the dimensions have not changed before using the gauge.

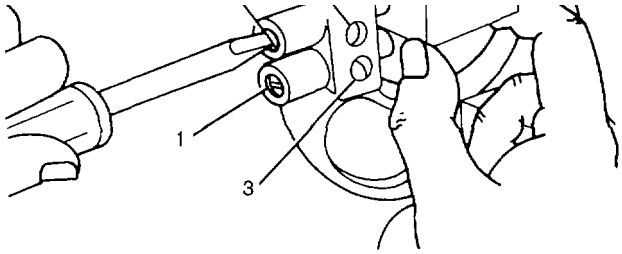

LEGEND
1. ADJUSTING SCREW
2. LOCKING SCREW
3. GAUGE FOOT

LEGEND
1. ADJUSTING
2. LOCKINGSCREW
3. GAUGEFOOT

Figure 3-65. Adjusting the Snap Gauge

(2) Gauging flat parts. Flat parts may be measured as follows (see figure 3-66):

(a) Position the gauge so that the pins or buttons are square with the flat surfaces on the part.

(b) Using a slight hand pressure, push the gauge over the part.

NOTE

- If the part is within limits, the NO GO pins will stop the part.
- If the part is undersized, it will be possible to push it past the NO GO pins.

(3) Gauging cylindrical parts. Cylindrical parts may be measured as follows:

(a) Place the gauge on the part, with the solid anvil on top, as shown in figure 3-67. Rock the gauge as indicated by the shaded area.

NOTE

If the shaft is not oversized, the first button will pass over it easily, as shown in figure 3-68.

(b) Move the gauge to the position shown in figure 3-69. If the NO GO button stops the gauge, the shaft is within limits.

NOTE

If the shaft can be moved onto or past the NO GO position, the diameter is too small.

d. Care of Snag Gauges. Observe the following practices for the care and upkeep of snap gauges:

(1) Always make certain that the surfaces of the parts gauged and the snap gauge itself are kept free from abrasives, dirt, grit, chips, and all foreign matter.

(2) Always consider the abrasive action of the part on the gauge. Cast iron, steel, and cast aluminum are more abrasive than brass, bronze, and nonmetals such as plastics. Use particular care when gauging cast iron, steel, and cast aluminum.

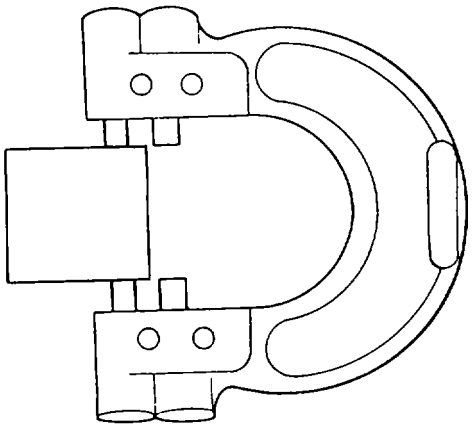

MEASURING GO DIMENSION

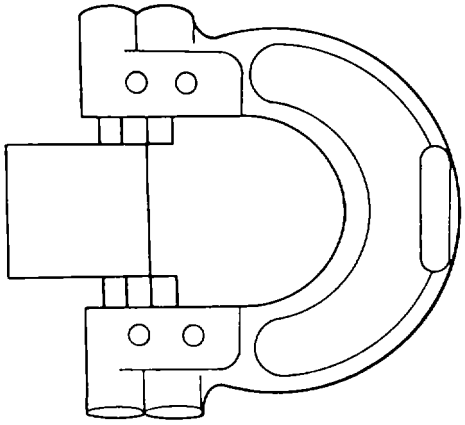

MEASURING NO GO DIMENSION

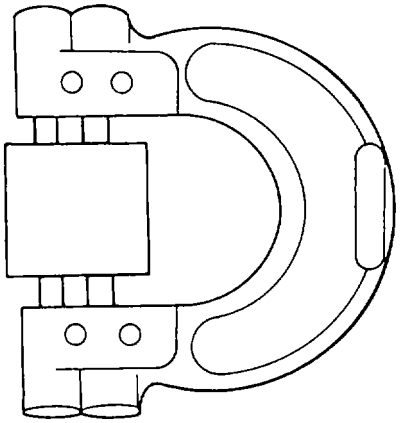

UNDERSIZE PART

Figure 3-66. Gauging Flat Parts

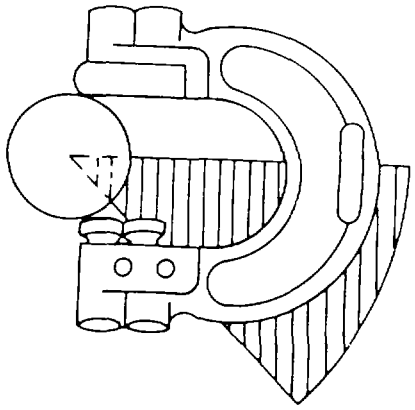

Figure 3-67. Placing Snap Gauge on Cylindrical Part

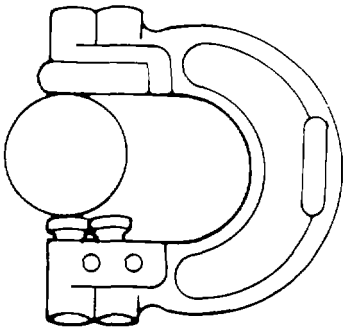

Figure 3-68. Correct GO Dimension for Cylindrical Part

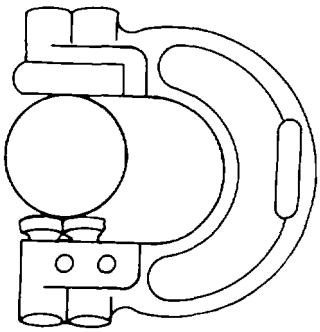

Figure 3-69. Correct NO-GO Dimension for Cylindrical Part

(3) When snap gauges are stored, arrange them neatly in a drawer or case so that they do not contact other tools or each other.

(4) Always hold the gauges in your hands when checking. Never clamp them in a vise.

(5) At frequent intervals, check all gauges for accuracy and wear with gauge blocks or master gauges.

3-17. Thickness Gauge. The thickness gauge consists of thin leaves, each ground to a definite thickness which is marked on the leaf. The leaves are usually in sets, with one end of each leaf fastened in a case. Figure 3-70 shows a typical thickness gauge.

a. Use. The thickness gauge is used to measure the clearance between two surfaces, such as checking piston ring gap clearance in a cylinder bore. Another typical use is shown in figure 3-71.

NOTE

- Ensure that the leaf is clean before inserting it into an opening.

- If a leaf of the proper thickness is not available, two leaves may be used, the dimensions of which add up to the required clearance.

- Exercise care when using thickness gauges to measure clearance of knives and cutters on machines. Do not lower knife on the leaf and then try to remove the gauge. The leaf may be shaved off if it is too tight.

- Never use thickness gauges for cleaning slots or holes.

b. Care. Observe the following practices for the care and upkeep of thickness gauges:

(1) Coat metal parts of thickness gauges with a light coat of oil to prevent rust.

(2) Store gauges in separate containers.

(3) Do not drop thickness gauges. Small nicks and scratches will result in inaccurate measurements.

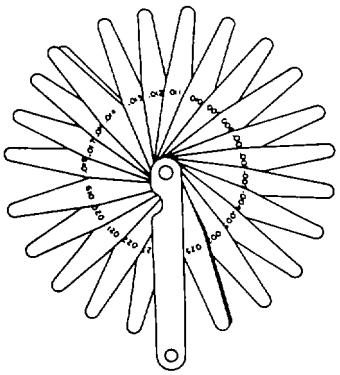

Figure 3-70. Thickness Gauge

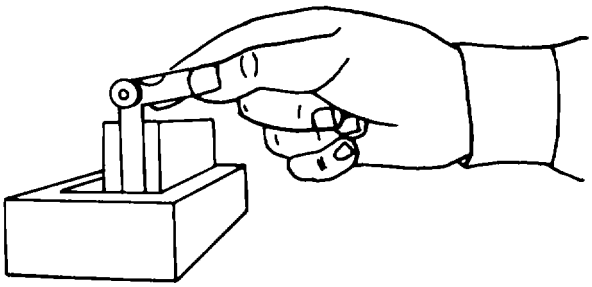

Figure 3-71. Using a Thickness Gauge

3-18. Sheet Metal and Wire Gauge. The sheet metal and wire gauge, shown in figure 3-72, is used for measuring the diameters of wires or the thickness of sheet metal.

a. Types. The type of sheet metal and wire gauge to be used depends on the type of material being measured, as follows:

GAUGE TYPE	MATERIALS
English Standard	Iron wire, hot-and cold-rolled sheet steel
American Standard	Non-ferrous sheet metal and wire
US Standard	Sheet and plate iron and steel
Steel wire gauge	Steel wire

b. Use. As previously stated, sheet metal and wire gauges can measure both sheet metal thickness and wire diameter (see figure 3-72).

(1) Sheet metal. To measure the thickness of a piece of metal, proceed as follows:

(a) Remove any burrs from the location where the gauge will be applied.

CAUTION

Do not force the metal into the slot. Damage to the metal can result.

(b) Find the slot that refuses to pass the metal without forcing.

(c) Try the next larger slots until one is found that passes the metal. This is the correct size.

NOTE

The decimal equivalent of the gauge number is shown on the opposite side of the gauge.

(2) Wire. To measure wire diameter, proceed as follows:

CAUTION

Do not force the wire into the slot. The wire can be crimped and possibly rendered useless.

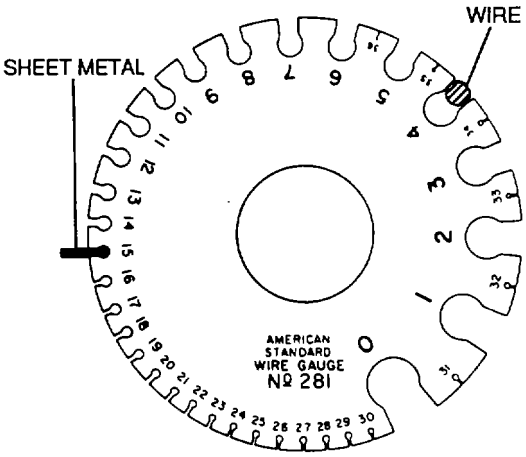

Figure 3-72. Measuring Sheet Metal and Wire

(a) Find the slot that refuses to pass the wire without forcing.

(b) Try the next larger slots until one is found that passes the wire. This is the correct size.

NOTE

- Measurements are taken at the slot portion rather than the cutout portion of the gauge.

- The decimal equivalent of the gauge number is shown on the opposite side of the gauge.

c. Care. Observe the following practices for the care and upkeep of sheet metal and wire gauges:

(1) Coat metal parts of wire gauges with a light coat of oil to prevent rust.

(2) Store gauges in separate containers.

(3) Keep graduations and markings clean and legible.

(4) Do not drop wire gauges. Small nicks and scratches will result in inaccurate measurements.

3-19. Fillet and Radius Gauges. Fillet and radius gauges are used to check the inside or outside corners (or fillets) of a machined part.

a. Description. The blades of fillet and radius gauges are made of hard-rolled steel. The double ended blades of the gauge have a lock which holds the blades in position. The inside and outside radii are on one blade on one of the gauges shown in figure 3-73. The other gauge has separate blades for inside and outside measurements. Each blade of each gauge is marked in 64ths. Each gauge has 16 blades.

b. Use. Fillet or radius gauges are used to check the inside or outside corners of a machined part, as shown in figure 3-74. These gauges can be used in any position and at any angle for both inside and outside radii.

c. Care. Observe the following practices for the care and upkeep of fillet and radius gauges:

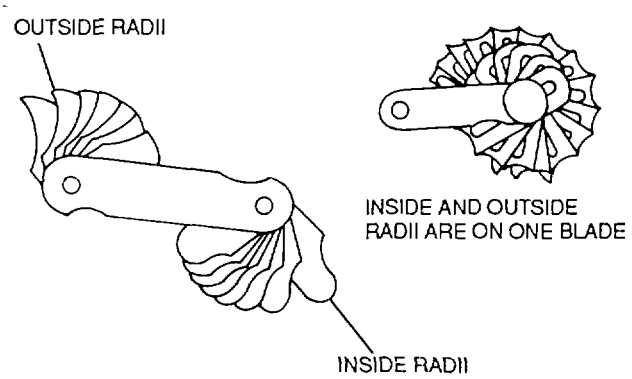

Figure 3-73. Fillet and Radius Gauges

(1) Coat metal parts of fillet and radius gauges with a light film of oil to prevent rust.

(2) Store gauges in separate containers.

(3) Keep graduations and markings clean and legible.

(4) Do not drop fillet and radius gauges. Small nicks and scratches will result in inaccurate measurements.

3-20. Dial Indicators. A dial indicator is a precision measuring tool designed for checking items such as bearing radial and axial play, propeller shaft run out, bushing and flight control system components for excessive play. The dial indicator plays an important part in deciding if a part is worn beyond an allowable tolerance.

a. Description. The dial indicator consists of a dial with reading needle and a graduated scale. The dial indicator has a measuring range from 0.001 to 0.200 of an inch. The dial is adjustable and has the reading pointer located on the back of the dial. The indicator can be mounted in various positions using a special clamp and tool post holder which is provided in the dial indicator kit. This assembly is shown in figure 3-75.

b. Use. Generally speaking, the dial indicator measures variations from a perfectly circular condition. Proceed with installation and use as follows:

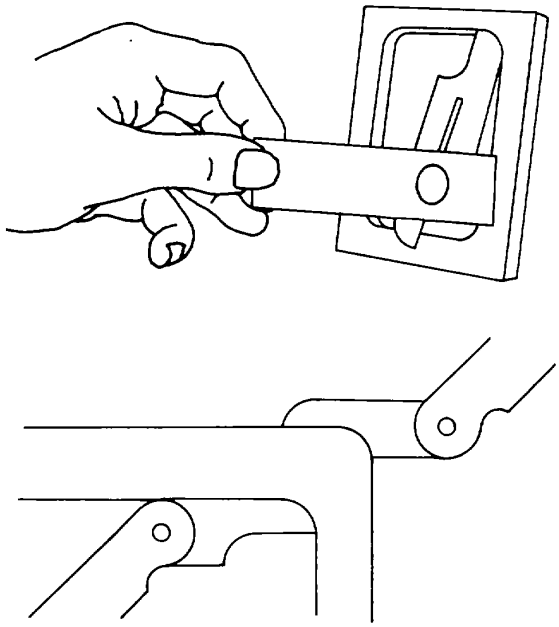

Figure 3-74. Using Fillet and Radius Gauges

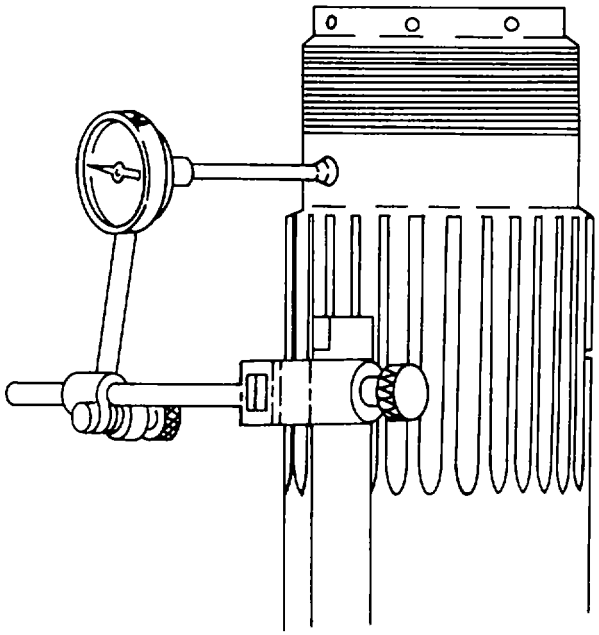

Figure 3-75. Dial Indicator Installed on Propeller Shaft

NOTE

The following general procedures are used or checking propeller shaft runout. Refer to the applicable aircraft maintenance manual for specific procedures to be used when use of a dial indicator is required.

(1) Remove propeller.

(2) Remove one of the nuts securing thrust bearing cap to reduction gear assembly and install a reversible type dial indicator on the long stud from which the nut was removed (see figure 3-76).

(3) Adjust dial indicator so that arm point is on propeller shaft at front cone location.

(4) Rotate propeller shaft and note total indicator movement. The maximum allowable runout at front cone location is found in the applicable aircraft maintenance manual.

(5) Adjust dial indicator so that arm point is on propeller shaft rear cone location.

(6) Rotate propeller shaft and note total indicator movement. The maximum allowable runout at rear cone location is found in the applicable aircraft maintenance manual.

c. Care The dial indicator is a delicate measuring instrument and must be treated as such. Exercise care when handling so that it is not damaged, as this may result in inaccurate measurements.

3-21. Telescoping Gauges. Telescoping gauges, shown in figure 3-77, are used for measuring the inside size of slots or holes up to 6 inches in width or diameter. They are T-shaped tools in which the shaft of the T is used as a handle, and the crossarm used for measuring. The crossarms telescope into each other and are held out by a light spring.

a. Selection. These tools are commonly furnished in sets, the smallest gauge for measuring the distances from 5/16 to 1/2 inch, and the largest for distances from 3 1/2 to 6 inches.

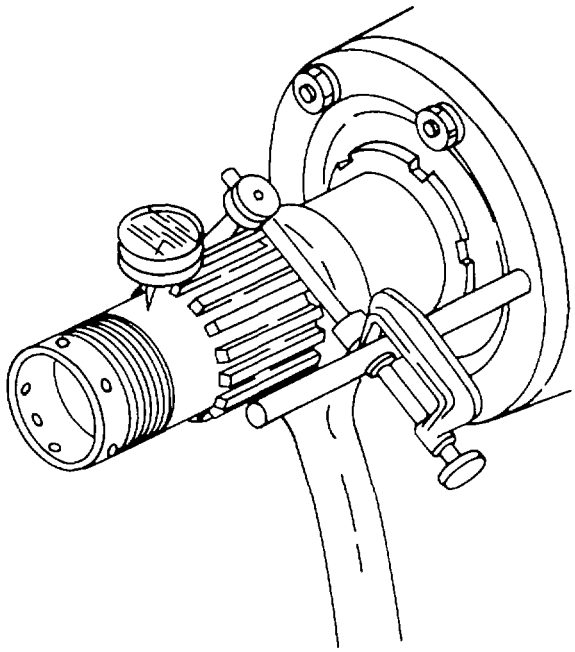

Figure 3-76. Checking Propeller Shaft Run Out

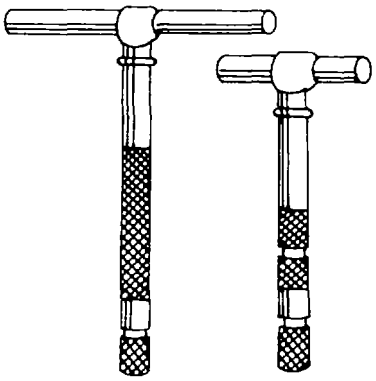

Figure 3-77. Telescoping Gauges

b. Use. To use the gauge, the arms are compressed, placed in the hole to be measured, and allowed to expand. A twist of the locknut on top of the handle locks the arms. The tool may then be withdrawn and the distance across the arms measured. To measure the diameter of a hole from 1/2 to 6 inches in diameter, select the tool with the proper range and proceed as follows:

(1) Loosen the knurled nut at the end of the handle.

(2) Telescope the adjustable end of the gauge of a size slightly smaller than the hole, and retighten the nut.

(3) Insert the gauge into the hole as shown in figure 3-78.

(4) Loosen the nut to permit the spring-loaded adjustable end to expand to the hole diameter, and tighten the nut. The spring-loaded feature will assure proper contact.

NOTE

Ensure that the gauge is held with the telescoping end at right angles to the axis of the hole to measure the true diameter.

(5) Remove the gauge and measure the setting with an outside micrometer.

c. Care. Observe the following practices for the care and upkeep of telescope gauges:

(1) Coat metal parts of telescope gauges with a light film of oil to prevent rust.

(2) Store gauges in separate containers.

(3) Keep graduations and markings clean and legible.

(4) Do not drop telescope gauges. Small nicks and scratches will result in inaccurate measurements.

3-22. Small Hole Gauges. For measuring smaller slots or holes than the telescoping gauges will measure, small hole gauges can be used. These gauges come in sets of four or more and will measure distances of approximately 1/8 to 1/2 inch. They are shown in figure 3-79.

a. Use. The small hole gauge consists of a small, split, ball-shaped member mounted on the end of a handle. A hole smaller than 1/2 inch is measured by the following procedures:

(1) Insert the proper size gauge in the hole, as shown in figure 3-80.

(2) Expand the ball by turning the knurled knob in the handle until there is a slight drag of the ball on both sides of the hole.

(3) Withdraw the gauge and measure the ball with an outside micrometer.

NOTE

Some types of small hole gauges have flattened ball ends to permit use in shallow holes and recesses.

b. Care. Observe the following practices for the care and upkeep of small hole gauges:

(1) Coat metal parts of small hole gauges with a light film of oil to prevent rust.

(2) Store gauges in separate containers.

(3) Keep graduations and markings clean and legible.

(4) Do not drop small hole gauges. Small nicks and scratches will result in inaccurate measurements.

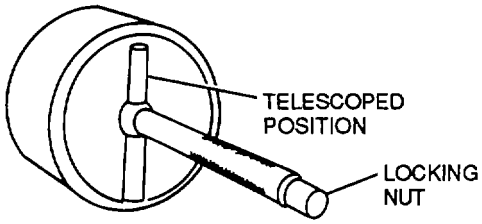

Figure 3-78. Measuring Hole With Telescoping Gauge

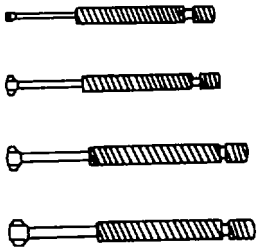

Figure 3-79. Small Hole Gauges

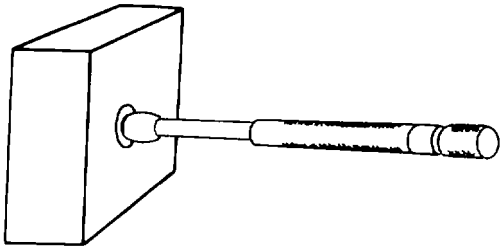

Figure 3-80. Measuring Hole with a Small Hole Gauge

CHAPTER 4

GENERAL MAINTENANCE TOOLS

4-1. General. The general maintenance tools covered in this chapter are those tools which are most commonly used in the maintenance of Army aircraft. Regardless of the type of work to be done, a mechanic must select and use the correct tools in order to do his work quickly, accurately, and safely. Without the correct tools and the knowledge to use them, he wastes time, reduces his efficiency, and may even injure himself. This chapter explains the purposes, correct use, and proper care of the more common tools.

4-2. Hammers and Mallets. Hammers are striking tools which are composed of a head made of metal, plastic, leather, or wood mounted on a handle. The handle is usually made of wood, although some modern hammers and mallets have handles made of fiberglass.

a. Types. The more common types of hammers and mallets are described in the following paragraphs.

(1) Ball peen hammer. The ball peen hammer is the type most often used by mechanics. It has a steel head and is usually available in 4-, 6-, 8-, and 12ounces, and 1, 1 1/2-, and 2-pounds. As figure 4-1 shows, this hammer is identified by the ball-shaped peen at the opposite end of the face.

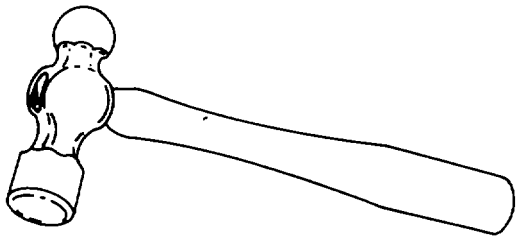

Figure 4-1. Ball Peen Hammer

(2) Body hammer. A body hammer, shown in figure 4-2, is used to straighten and form metal.

(3) Riveting hammer. The riveting hammer, shown in figure 4-3, is used for driving rivets and for light chiseling. One end of the head is cross peened. The other end may have either a square or a chamfered face.

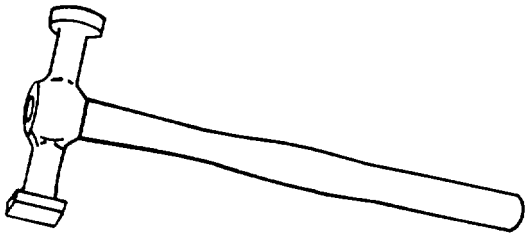

Figure 4-2. Body Hammer

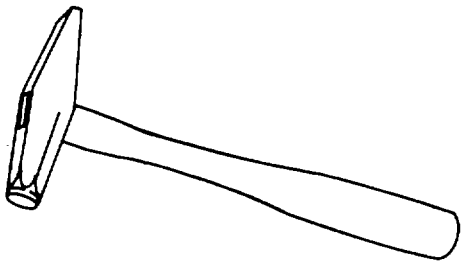

Figure 4-3. Riveting Hammer

(4) Setting hammer. The setting hammer has a square flat face on one end of the head and a sloping beveled edge on the other end. It is used in sheet metal work for leveling and bending edges and for setting double seams. An example of this type of hammer is shown in figure 4-4.

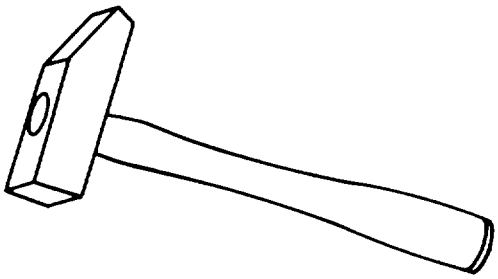

Figure 4-4. Setting Hammer

(5) Lead or copper hammer. The lead or copper hammer is usually used for aligning steel surfaces. Atypical hammer of this type is shown in figure 4-5. The working surfaces of this hammer can be filed to restore even faces.

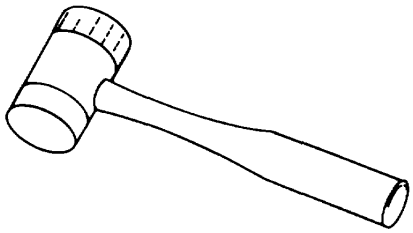

Figure 4-5. Lead or Copper Hammer

(6) Soft-faced hammer. The soft-faced hammer, shown in figure 4-6, is capable of delivering heavy blows to machined, highly polished, or soft surfaces without damage to those surfaces. On some of these hammers, the faces can be removed and replaced when damaged or when a different hardness or toughness is required. These faces are color coded according to their hardness or toughness, as shown in the following listing:

HARDNESS	SYMBOL	COLOR
Soft	S	Brown
Medium	M	Red
Tough	T	Green
Medium-hard	N	Cream
Hard	H	Black
Extra-hard	XH	Yellow

Table 4-1 shows which substances provide the required hardness for a specific application.

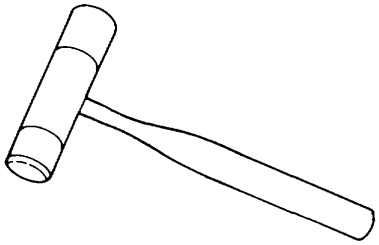

Figure 4-6. Soft-Faced Hammer

(7) Mallets. Mallets are generally made of softer substances for working items which would be damaged by metal hammers. The following paragraphs describe some of the more common types.

(a) Rawhide mallet. The rawhide mallet has a cylindrical head which is made by tightly wrapping and staking a sheet of leather. It is used for forming and shaping sheet metal, and is shown in figure 4-7.

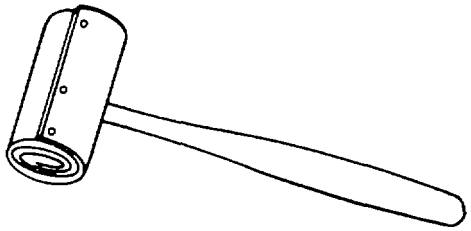

Figure 4-7. Rawhide Mallet

(b) Rubbermallet. The rubber mallet shown in figure 4-8 has a cylindrical rubber head. It is used for forming sheet metal, driving dowels, and small stakes.

Figure 4-8. Rubber Mallet

(c) Tinner's mallet. The tinner's mallet shown in figure 4-9 has a cylindrical wooden head which is from 1 1/4 to 3 1/2 inches in diameter and from 3 to 6 inches in length. It is used to form and shape sheet metal.

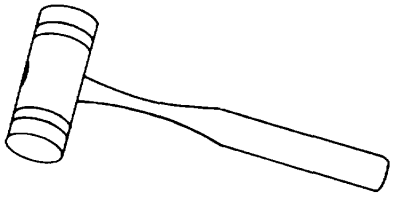

Figure 4-9. Tinner's Mallet

Table 4-1. Soft-Faced Hammer Face Substances

Type	Soft	Medium	Tough	Medium hard	Hard	Extra hard
Soft rubber	S					
Wood	S	M		N		
Rubber		M				
Hard wood			T			
Lead			T	N		
Plastic			T	H		
Rawhide		M	T	N	H	XH
Micarta					H	XH
Fiber					H	XH
Copper						XH

b. Safety. The following precautions must be kept in mind when using hammers:

Do not use a hammer handle for bumping parts in an assembly. Never use it as a pry bar. Such abuses will cause the handle to split, which can result in bad cuts or pinches to the hand. When a handle splits or cracks, do not try to repair it by binding with string or wire. Replace it.

- Ensure that the head fits tightly on the handle. If it is loose, it can fly off during use and cause serious injury to personnel.

- Do not strike a hardened steel surface with a steel hammer. Small pieces of steel may break off and injure someone in the eye or damage the work.

- When using metal hammers, always wear eye protection to prevent metal particles from entering the eyes.

c. Use When using a hammer or mallet, ensure that the material will not be damaged by the tool. The hammer should be gripped near the end of the handle and should strike the surface evenly.

d. Care. Hammers and mallets are maintained by general maintenance methods and by replacement of parts. The following paragraphs describe these procedures.

(1) General maintenance. Hammers are inspected and maintained as follows:

(a) Check for cracks in the handle. Replace the handle if cracked.

(b) Check for a loose head. Replace missing or temporary wedges to be sure the head is tight. If the head is not tight, replace the handle.

(c) Periodically rub a small amount of linseed oil, Federal Specification TT-L-190, into the wood handle to prevent the wood from drying out and shrinking.

(d) Replace hammer if the face is worn or chipped.

(e) Lightly lubricate metal parts when storing the hammer for a lengthy period of time.

(f) Wipe oil and grease from rubber mallets to prevent damage to rubber.

(2) Care of inserted-face hammers. Broken or chipped faces may be replaced as follows:

(a) Remove damaged face by turning in a counterclockwise direction.

WARNING

Use a pair of pliers or a rag on broken faces to prevent injury to the hands.

(b) Wipe out the face seat in the hammer head with a clean rag.

(c) Install the new face by turning in a clockwise direction.

CAUTION

Exercise care when using tools to install new faces, to prevent damage to the face surfaces.

(3) Replacing a defective handle. A split or cracked handle can be replaced using the procedures in the following paragraphs.

(a) Removal of old handle. To remove the old handle, proceed as follows:

1 If the handle is loose, pull it from the head.

2 If the handle is too tight to pull loose from the head, place the hammer in a vise.

3 Saw off the handle close to the head, as shown in figure 4-10.

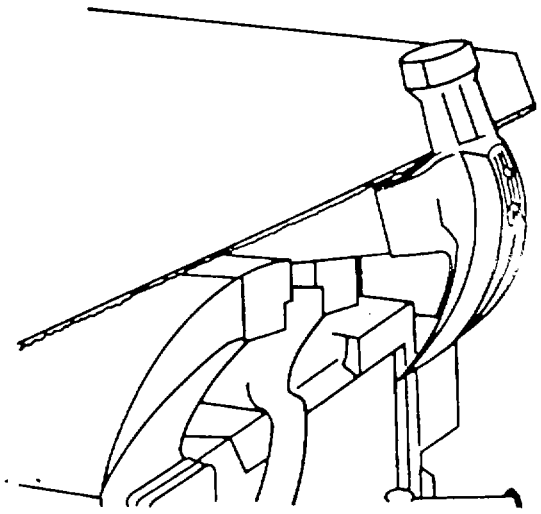

Figure 4-10. Removing Broken Handle

4 Drive the remainder of the handle through the large end of the head. Save the wedges.

(b) Installation of new handle. The new handle is installed as follows:

1 Obtain a new handle and wedges, as shown in figure 4-11.

2 Insert the handle in the head.

3 Seat the handle in the head with a rubber mallet.

4 Drive the wooden wedge in the handle face with a hammer, as shown in figure 4-12.

5 Place the hammer in a vise. Using a handsaw, remove the projecting end of the wedge.

6 File the excess portion of the wedge using a wood rasp.

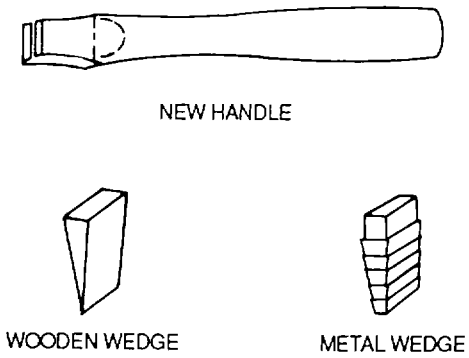

Figure 4-11. New Handle and Wedges

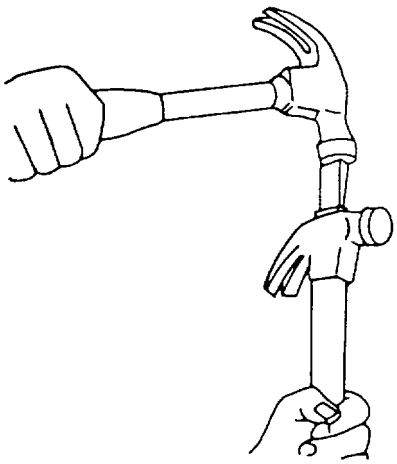

Figure 4-12. Installing Wedge

7 Select the metal wedge and drive it into the wooden wedge with a hammer.

WARNING

Wear eye protection when grinding metal on a bench grinder. Failure to comply may result in serious injury to personnel.

8 Remove the excess portion of the metal wedge using a bench grinder.

(4) *Repairing uneven face wear*. Uneven face wear can be repaired by reshaping the worn faces, using the following procedures:

(a) Determine the original shape of the face by examining an unworn portion or comparing the hammer to be repaired with another of the same type.

WARNING

Wear eye protection when grinding metal on a bench grinder. Failure to comply may result in serious injury to personnel.

(b) Grind the face to the original shape, dipping in water frequently to avoid overheating.

NOTE

- Remove only the amount of stock necessary to repair the face.
- When grinding mallets, remove equal amounts of stock from both faces to retain balance.

4-3. Screwdrivers. Screwdrivers are tools used for driving or removing screws. Generally, they consist of a steel blade and shank set in a handle of wood or plastic. However, they come in various other shapes, some being adapted to a particular usage. A large variety of sizes is available.

a. *Types.* There are many types of screwdrivers used in the maintenance of Army aircraft. The following paragraphs describe the types most commonly used.

(1) *Common screwdriver*. The common, or standard, screwdriver, shown in figure 4-13, is suitable for driving or removing slotted screws. The blade must have sharp corners and fit the screw slot closely. The size is designated by the length of the shank and blade.

(2) *Phillips screwdriver*. The Phillips screwdriver has a blunt cross tip. The tip is ground to a 30-degree angle, as shown in figure 4-14.

NOTE

The Phillips screwdriver is not interchangeable with the Reed and Prince screwdriver. The use of the wrong type screwdriver results in mutilation of the screwdriver and the screw head.

(3) *Offset screwdrivers*. The offset screwdriver shown in figure 4-15 is composed of a shank with a blade on each end. The blades are bent at right angles to the shank. One is parallel to the shank, the other is set at 90 degrees. This screwdriver is especially usefully in performing close work. Some offset screwdrivers are

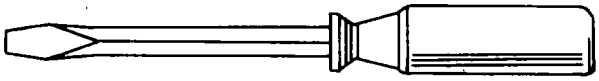

Figure 4-13. Common Screwdriver

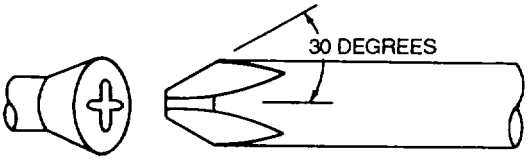

Figure 4-14. Phillips Screwdriver

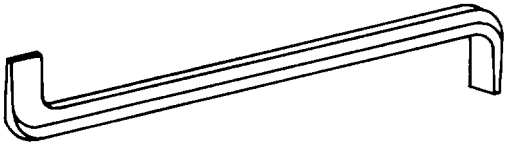

Figure 4-15. Offset Screwdriver

available as ratchet-types, which allow the screw to be driven without having to remove the tip from the screw head.

(4) *Ratchet screwdrivers.* The ratchet, or spiral, screwdriver shown in figure 4-16 is fast acting in that it turns the screw when the handle is pulled back and then pushed forward. It can be set to turn the screw either clockwise or counterclockwise, or it can be locked in position and used as a standard screwdriver. The ratchet screwdriver is not a heavy-duty tool and should be used only for light work.

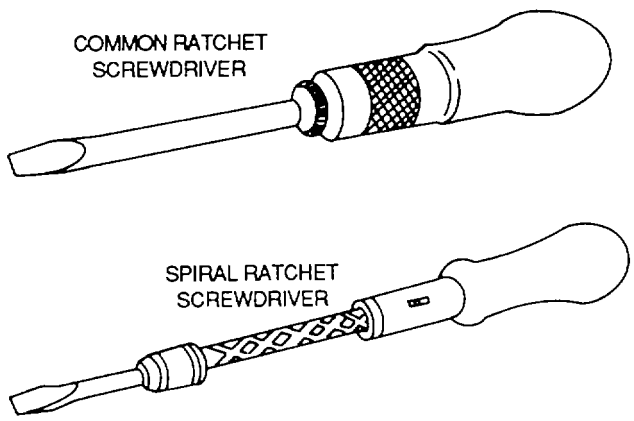

Figure 4-16. Ratchet Screwdrivers

NOTE

When using a spiral or ratchet screwdriver, extreme care must be used to maintain constant pressure and prevent the blade from slipping out from the slot in the screw head. If this occurs, the surrounding structure is subject to damage.

(5) *Nonmagnetic screwdriver.* The nonmagnetic screwdriver is shaped like a common screwdriver, but the blade is made of brass so as to have no magnetic effect. It is used for compensating compasses.

b. *Safety*. The following precautions must be kept in mind when using screwdrivers:

Ensure that the handle of the screwdriver is clean.

- Do not use a screwdriver for prying, punching, chiseling, scoring, or scraping.
- Do not use a screwdriver to check an electric circuit since an electric arc will burn the tip and make it useless. In some cases, an electric arc may fuse the blade to the unit being checked.
- When using a screwdriver on a small part, always hold the part in the vise or rest it on a workbench. Do not hold the part in the hand, because the screwdriver may slip and cause serious personal injury.

c. *Use* The following paragraphs describe the use of various types of screwdrivers.

(1) *Proper fit*. Select a screwdriver large enough so the blade fits closely in the screw slot. A loose fitting blade can slip and cause burring of the screw slot and damage to the blade. Proper and improper fits are shown in figure 4-17. It is important that the screwdriver be held firmly against the screw to prevent it from slipping and possibly injuring the mechanic or scarring the work.

(2) *Use of screwdriver*. A screwdriver is used as follows:

(a) Insert the screwdriver tip into the screw slot of the screw.

(b) Turn the screw as required. Keep the screwdriver in line with the screw.

(3) *Use of offset screwdriver*. The procedure for using an offset screwdriver is as follows (see figure 4-18):

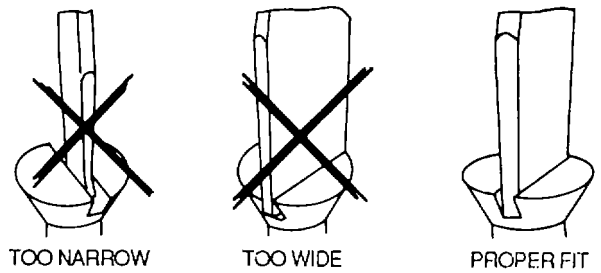

Figure 4-17. Proper Fit of Screwdrivers

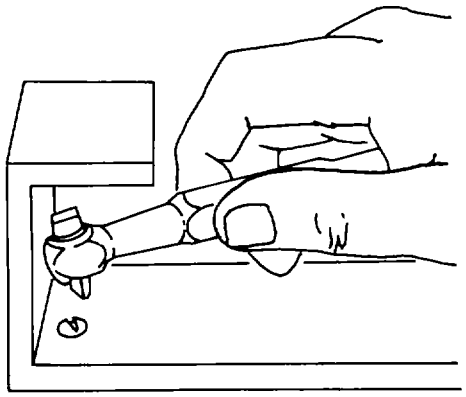

Figure 4-18. Using Offset Ratchet Screwdriver

(a) Select the correct style and tip size for the screw being used.

(b) Insert the tip in the screw slot.

(c) In tight places, alternate tips to complete screw installation.

(4) Use of offset-ratchet screwdriver. An offset-rachet screwdriver is used as follows: (see figure 4-18).

(a) Select the correct style and tip size for the screw being used.

(b) Set the action selection lever in the screwdriver for the direction of rotation required.

(c) Insert the tip in the screw slot of the screw head. Pull the lever to the right or left, depending on whether the screw is being installed or removed. The tip does not have to be removed from the screw slot.

d. *Repair*. Battered or nicked blades may be repaired by grinding to the original shape.

(1) *Common screwdrivers*. When grinding common screwdrivers, the tip should be squared and the sides parallel, as shown in figure 4-19.

(2) *Cross-point screwdrivers*. Phillips screwdrivers require special holding fixtures for grinding but can be shaped in an emergency by filing if the original angles and bevels are maintained.

NOTE

Dip the screwdriver in water often during the grinding process to preserve the temper.

(3) Restoring temper. When the tempered portion of the blade has been broken off, ground away, or overheated, the temper can be restored by the following process:

(a) Heat about 1 1/2 inches of the blade to a cherry-red color.

(b) Dip 3/4 inch of the tip into clean, cold water and quickly rub the hardened end with abrasive cloth, Federal Specification P-C-451, to brighten it.

(c) When a light blue color reaches the tip, quench the screwdriver in water.

(d) Polish the blade with abrasive cloth, Federal Specification P-C-451.

e. *Care*. Observe the following practices for the care and upkeep of screwdrivers:

(1) Do not expose a screwdriver to excessive heat, because it may reduce the hardness of the blade.

(2) Replace a screwdriver that has a worn or damaged handle or a rounded tip.

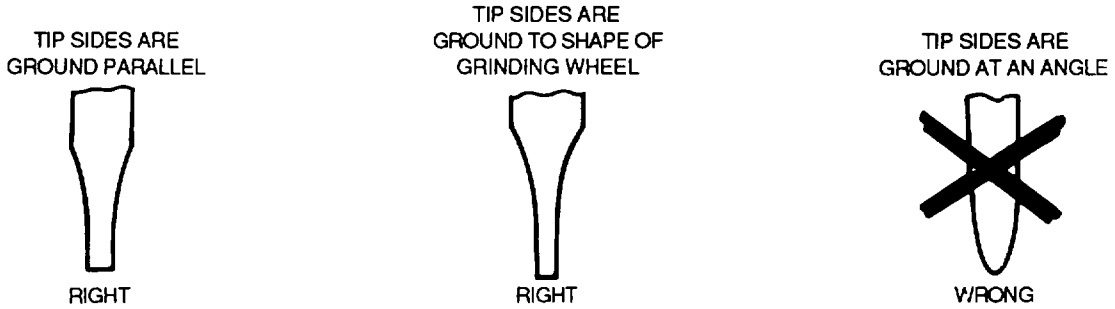

Figure 4-19. Screwdriver Tip Grinding

(3) After use, wipe the screwdriver clean and place in a rack or the tool box. For extended storage, apply a light coat of oil to all metal surfaces and store it in a dry place.

4-4. Wrenches. Wrenches are used for tightening or removing nuts, bolts, or cap screws, and also for gripping round objects such as pipe. They are made of a relatively hard substance, such as chrome-molybdenum steel, which enables them to withstand the rigors of normal use.

a. *Types*. Wrenches used in aircraft maintenance can be generally categorized as open-end, box-end, combination, adjustable, socket, hexagonal, and spanner wrenches.

(1) *Open-end wrenches*. Open-end wrenches have two parallel jaws at each end of a bar, as shown in figure 4-20. The jaws of an open-end wrench are usually machined 15 degrees from parallel to the centerline of the wrench, as shown in figure 4-21. The two ends of each wrench fit consecutively-sized nuts such as 3/8and 7/16-inch, 1/2and 9/16inch, and so on.

(2) *Box-end wrenches*. Box-end wrenches have a head on each end of a bar, as shown in figure 4-22. The head completely surrounds the nut or bolt, which decreases the chances that the wrench will slip off the work. Box-end wrenches are available with 6-point and 12-point openings. These openings are offset from the shank at a 15-degree angle to allow clearance, as shown in figure 4-23. A box-end wrench should be used whenever possible because it provides the best protection to both the user and the equipment. These wrenches are sized the same as open-end wrenches.

(3) *Combination wrenches*. The combination wrench shown in figure 4-24 combines the best features of the open-end and box wrench into a single wrench. The size opening on the wrench is the same on both ends, but one end has a box head and the other end has an open-end head. The length of the wrench varies with the size of the head. The box-end opening is offset from the shank by 15 degrees.

(4) *Adjustable wrench*. Adjustable wrenches include crescent, auto, and pipe wrenches, shown in figure 4-25. These wrenches are generally intended for use on odd-sized nuts and bolts, and are adjusted by a knurled worn gear, which moves the movable jaw to fit the part. Adjustable wrenches are available in sizes ranging from 4 to 24 inches in length. The jaw capacity is proportional to the handle length.

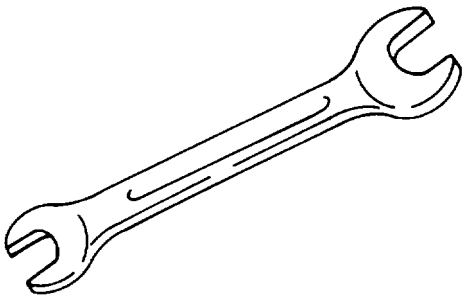

Figure 4-20. Open-End Wrench

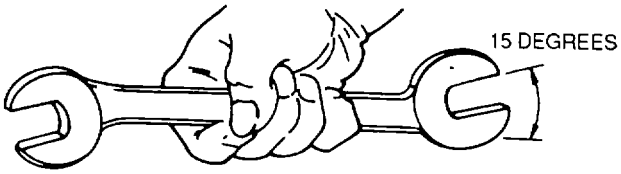

Figure 4-21. Open-End Wrench Jaw Offset

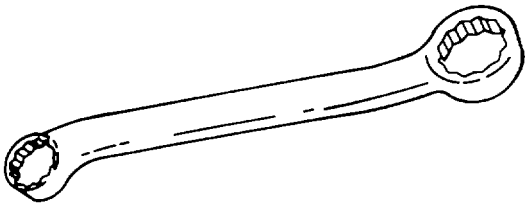

Figure 4-22. Box End Wrenches

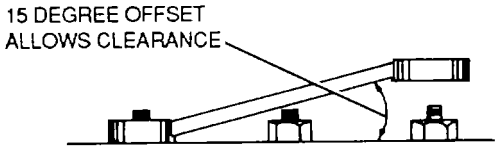

Figure 4-23. Box-End Wrench Offset

(5) *Socket wrenches*. Socket wrenches consist of a socket and a handle.

(a) *Sockets*. Sockets are round metal sleeves with a square opening in one end for insertion of a handle, and a 6-point or 12-point wrench opening in the other, as shown in figure 4-26. They are available in common (short) and deep (long) lengths. The drive

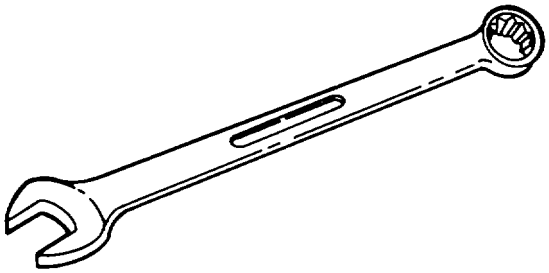

Figure 4-24. Combination Wrench

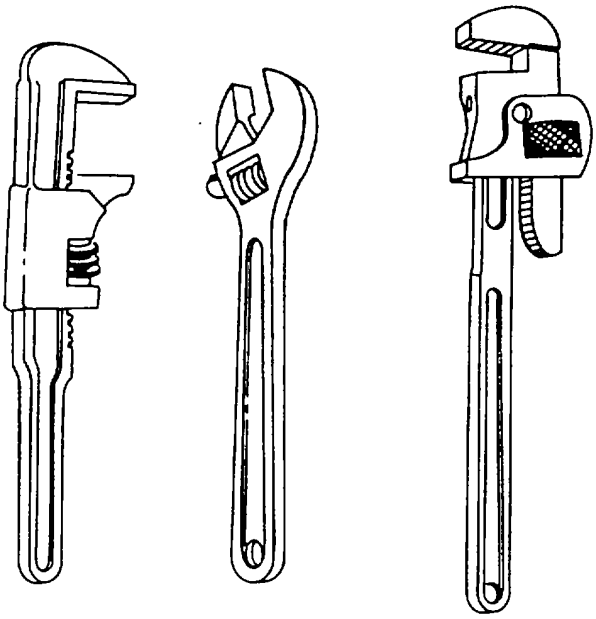

Figure 4-25. Adjustable Wrench

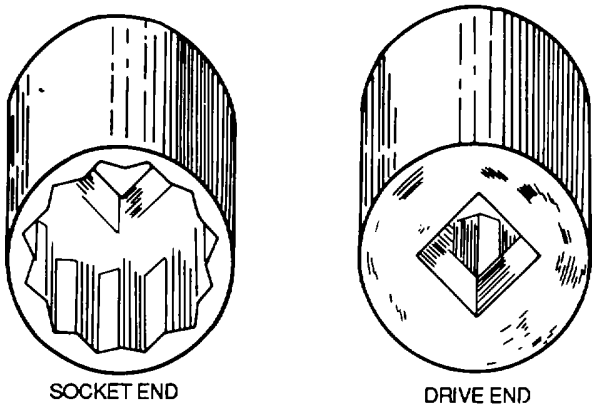

Figure 4-26. Sockets

end can vary from 1/4-to 1-inch. Sockets are driven by a wide variety of handles.

(b) *Handles*. There are many types of handles used to drive sockets. The following paragraphs describe the more common types in use.

1. *Ratchet handle*. Ratchet handles may have either a straight head or a flex head. The flex head is used to go around objects. Both types have a selection lever on the top of the head to determine the direction of drive. A straight head type is shown in figure 4-27.

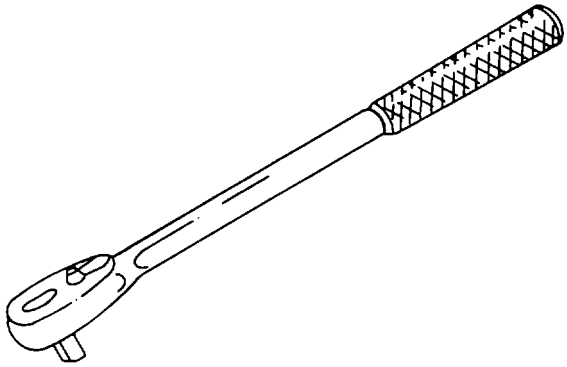

Figure 4-27. Ratchet Handle

2 *Sliding T-bar handle*. The sliding Tbar handle shown in figure 4-28, has a single head which may be adjusted along a bar handle. It has two spring loaded balls, one for keeping the bar in the head and the other for keeping the socket on the head. The sliding T-bar is used for increased leverage or for working around other objects.

3 *Hinged handle*. A hinged handle has a hinged adapter on one end which may be rotated in 90-degree steps. The hinged handle is used when additional leverage or torque is needed to loosen nuts or bolts. This type of handle is shown in figure 4-29.

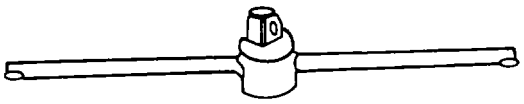

Figure 4-28. Sliding T-Bar Handle

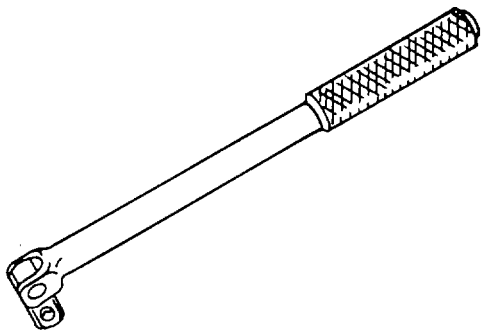

Figure 4-29. Hinged Handle

4 *Speed handle*. The speed handle, shown in figure 4-30, has a brace-type shaft with a revolving grip on the top. It is used for rapid removal and/or installation of nuts or bolts, which are out in the open and have little or no torque.

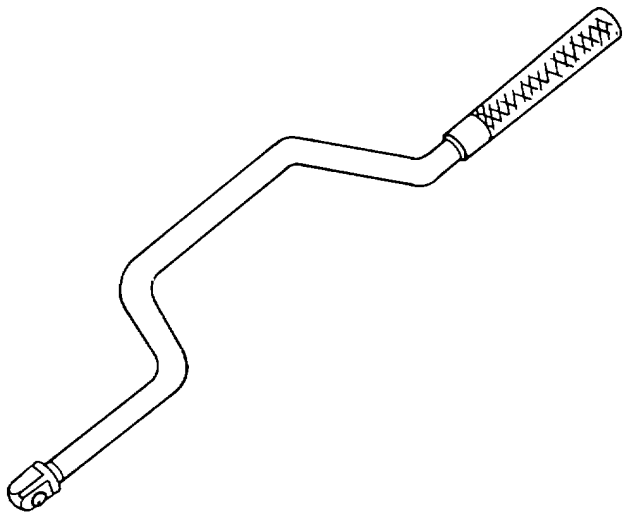

Figure 4-30. Speed Handle

(6) *Hexagonal wrenches*. Hexagonal setscrew wrenches (Allen wrenches) are L-shaped, headless, hexagonal bars that range in size from 3/64-to 1/2-inch. A typical Allen wrench is shown in figure 4-31. They are used in tightening or removing screws that have hexagonal recesses.

b. *Uses*. When using any type wrench, special attention should be given to choosing the one best suited for

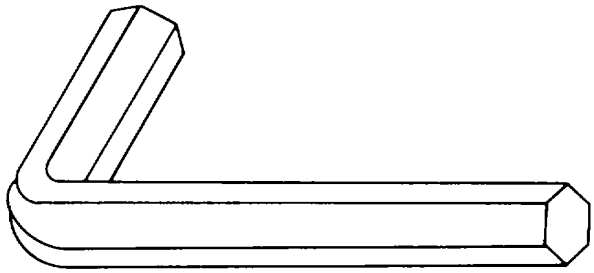

Figure 4-31. Hexagonal Setscrew Wrench (Allen Wrench)

the job. Selecting a wrench larger than the nut or bolt head will often result in rounded corners and additional maintenance time. Arrange work so a wrench is pulled, not pushed. Never use pipe or other extensions to increase leverage. The following paragraphs describe the various procedures involved with operating the previously described wrenches.

(1) *Use of open-end wrenches*. The 15-degree offset of the jaws from the centerline of the wrench makes the open-end wrench appropriate for use in some applications where there is room to make only a part of a complete turn of a nut or bolt. A typical procedure for this application is shown in figure 4-32 and outlined in the following:

NOTE

Where conditions make it impossible to use a socket or box-end, an open-end wrench may be used. The open-end wrench has fewer contact points than either a socket or box-end and is more likely to round off the corners of the nut.

(a) Step 1 shows the wrench, with the opening sloping to the left, about to be placed on the nut.

(b) Position the wrench on the nut (step 2). Note that space for swinging the wrench is limited.

(c) Move the wrench clockwise to tighten the nut. The wrench will strike the casting which prevents further movement (step 3).

(d) Remove the wrench from the nut and turn counterclockwise to place it on the next set of flats on the nut.

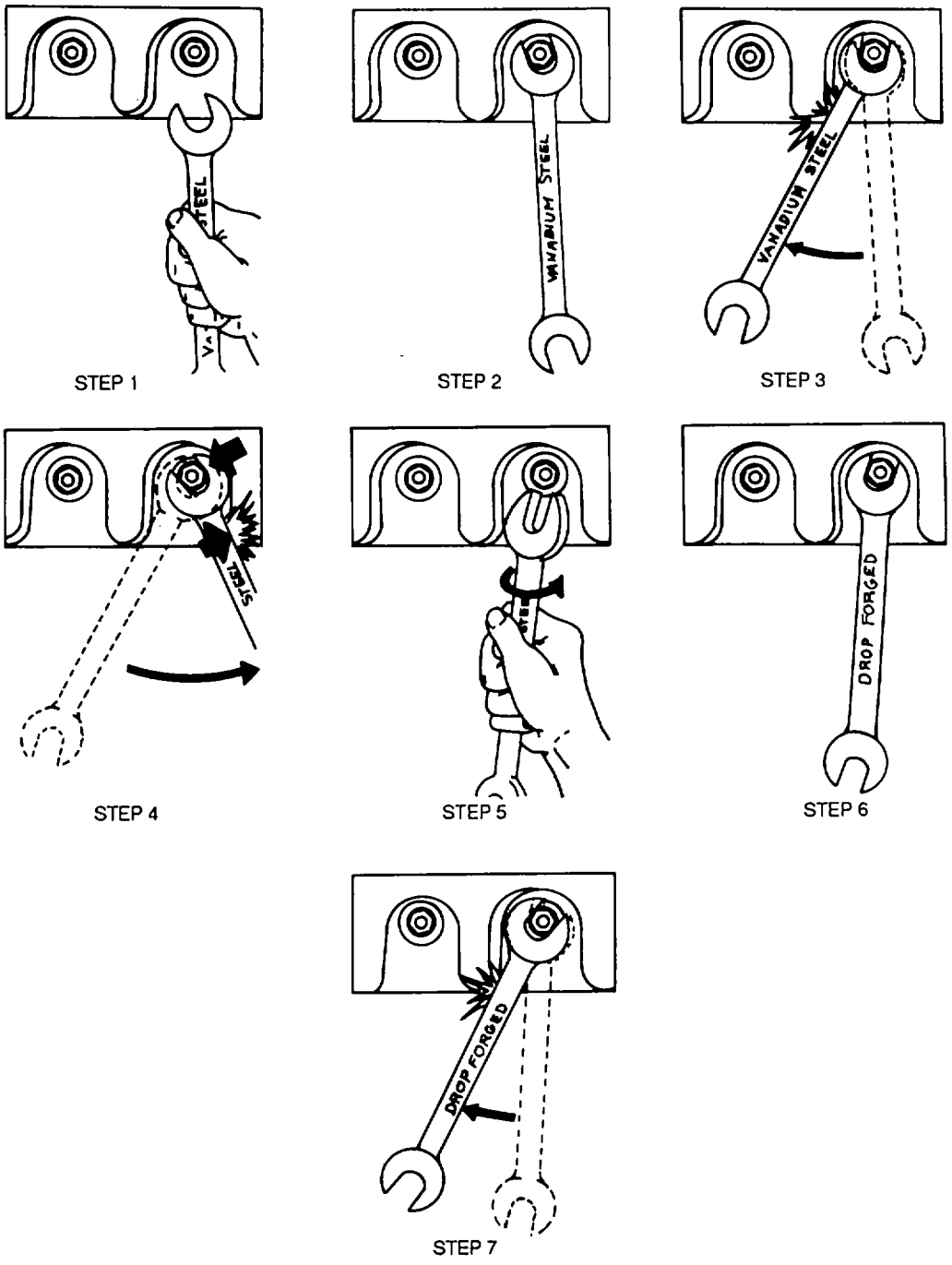

Figure 4-32. Use of Open-End Wrench

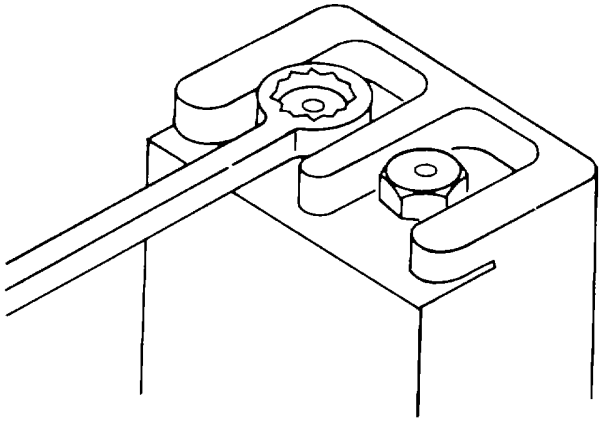

Figure 4-33. Use of Box-End Wrench

NOTE

The corner of the casting may prevent the wrench from fitting on the nut (step 4).

(e) If this occurs, flip the wrench over so that the opening will slope to the right (step 5).

(f) Position the wrench on the next two flats on the nut (step 6).

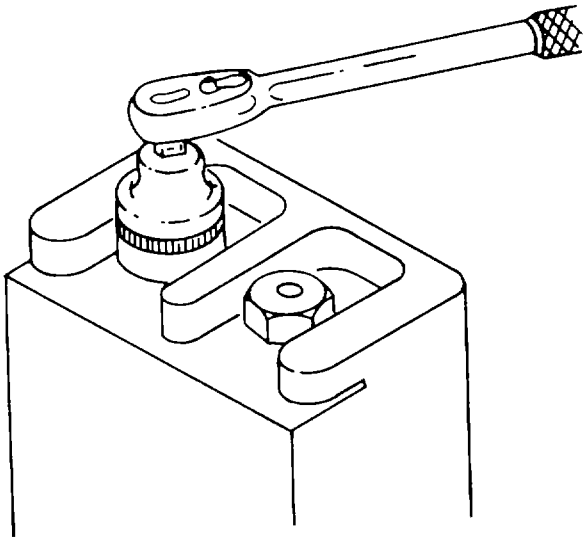

Figure 4-34. Use of Socket Wrench

(g) Turn the wrench clockwise to further tighten the nut (step 7).

(h) Continue flipping the wrench as required until the nut is completely tightened.

(2) *Use of box-end wrenches*. Box-end wrenches are very good for final tightening of nuts. The following procedures describe the typical use of box-end wrenches:

(a) Select the size of wrench that fits the nut or bolt.

(b) Place the wrench on the nut or bolt and turn as required to loosen or tighten.

(c) If there is insufficient room to swing the wrench in a full circle, as shown in figure 4-33, lift it completely off the nut when it comes to the limit of the swing, and place it in a new position, permitting another swing. A swing through a 15-degree arc is usually sufficient to continuously loosen or tighten a nut or bolt.

(3) *Use of socket wrenches.* Where practical, a socket wrench is best of loosening or tightening nuts and bolts. Speed can be attained through the use of ratchets and speed handles. Length of the handle used is very important, as very little pressure is required to strip threads of twist off a small bolt using a long handle. Extension bars and universal joints enable a mechanic to get at nuts or bolts that would otherwise be out of reach or at a difficult angle. Figure 4-34 shows a typical use of a ratchet wrench. The procedure is outlined as follows:

(a) Select the size of the socket that fits the nut or bolt to be turned. Push it onto the handle which is best suited for the job.

(b) Turn the socket with the handle to tighten or loosen the nut or bolt.

(4) *Use of adjustable wrenches.* Adjustable wrenches should be used only when wrenches of correct size are unavailable. They should be properly adjusted and pulled so the handle moves in the direction of the adjustable jaw, as shown in figure 4-35. Place the wrench on the nut so that the force used to turn it is applied to the stationary jaw side of the wrench

c. *Repair*. Some repair is possible to certain types of wrenches. Wrenches can damage nuts and bolts if the fit is not just right. Generally speaking, repair of

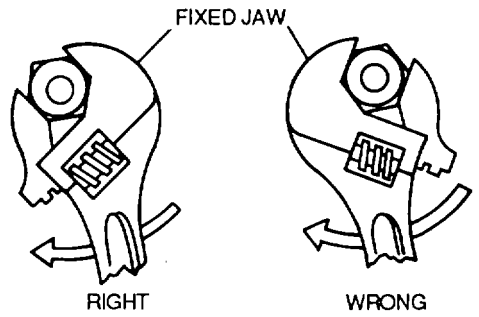

Figure 4-35. Proper Procedure for Pulling Adjustable wrenches

wrenches is impractical when compared with the replacement cost.

d. Care. Observe the following practices for the care and upkeep of wrenches:

(1) Clean all wrenches after each use.

(2) Wrenches that come in sets should be returned to their cases after use.

(3) Apply a thin film of oil to the metal parts of all wrenches before storing them.

(4) For long-term storage, the wrenches should be covered with a rust-preventive compound and carefully stored in a dry place.

e. Spanner Wrenches. Many special nuts used in propeller systems are made with notches or holes cut into the outer edge or the face of the nut. These nuts are designed to be driven with spanner wrenches.

a. *Types*. Spanner wrenches can generally be classified as one of two types: solid and adjustable.

(1) *Solid spanner wrenches.* The following paragraphs describe the various types of solid spanner wrenches.

(a) *Hook spanner*. Nuts with notches cut into the outer edge are driven with the hook spanner, as shown in figure 4-36. This wrench has a curved arm with a lug or hook in the end. This lug fits into one of the notches of the nut, and the handle is pulled to tighten or loosen the nut.

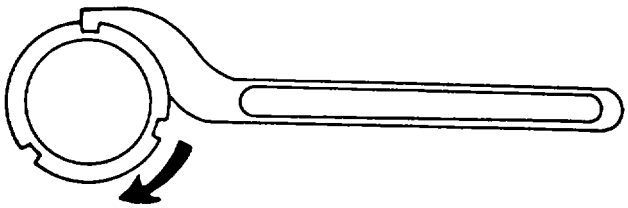

Figure 4-36. Hook Spanner Wrench

(b) *Pin spanner.* The pin spanner, shown in figure 4-37, has a pin in place of the hook. This pin fits into a hole on the outer edge of the nut.

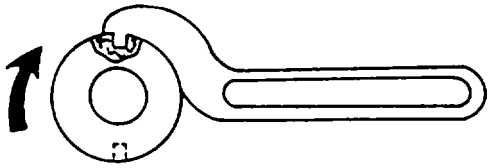

Figure 4-37. Pin Spanner Wrench

(c) *Face pin spanner*. Face pin spanners are designed so that the pins fit into holes in the face of the nut, as shown in figure 4-38.

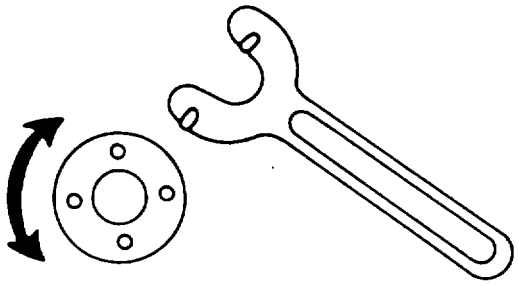

Figure 4-38. Face Pin Spanner Wrench

(2) *Adjustable spanner wrench*. Solid spanner wrenches are sized for specific sizes of nuts. The adjustable spanner wrench, shown in figure 4-39, has a pivoting end which allows the wrench to fit several nut sizes. The type of wrench shown is a hook spanner, and is used the same way as the solid hook spanner.

(3) *Pliers, Retaining Ring*. The retaining ring pliers (snap ring) are used to remove internal and external retaining rings. It is shown in figure 4-40.

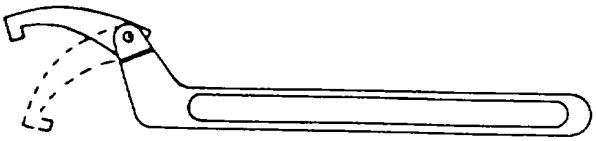

Figure 4-39. Adjustable Hook Spannner Wrench

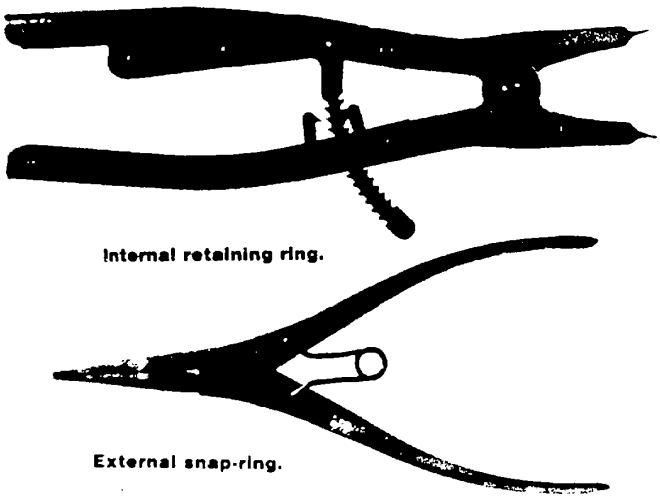

Figure 4-40. Pliers, Retaining Ring

4-5. Pliers. Pliers are so constructed that a force or pressure applied to the handles is intensified through the pivot point to the jaws. This leverage enables the mechanic to hold materials which the hand alone is not strong enough to hold.

a. *Types.* Pliers are made in various types for various uses. The more common types and their uses are listed in the following paragraphs:

(1) *Slip-joint pliers.* The slip-joint combination pliers shown in figure 4-41 have serrated (grooved) jaws, with a rod-gripping section, a cutting edge, and a pivot. The serrated jaws and rod-gripping section are used to hold objects. The cutting edge permits the cutting of soft wire and nails. However, cutting hard materials or large gauge wire will spring the jaws, making the pliers useless. The pivot is used to adjust the jaw opening to handle large or small objects.

(2) *Diagonal cutting pliers*. The diagonal cutting pliers, shown in figure 4-42, have a fixed pivot. The jaws are offset by about 15-degrees and are shaped to give enough knuckle clearance while making flush cuts. The diagonal cutting pliers are used for cutting small, light objects such as wire, cotter pins, and similar items. These pliers are not to be used to hold or grip objects.

(3) *Long-nose pliers*. Long nose pliers, shown in figure 4-43, are used to reach places inaccessible to the fingers, such as inserting cotter pins in close places. They are also used to bend small pieces of metal.

(4) *Flat-nose pliers*. The flat-nose pliers have flat serrated jaws, a fixed pivot, and curved handles which may have insulated sleeved. These pliers are used to bend light sheet metal and wire, and are shown in figure 4-44.

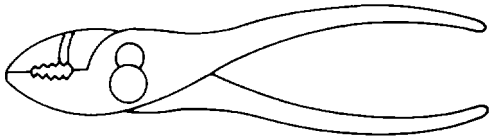

Figure 4-41. Slip-Joint Pliers

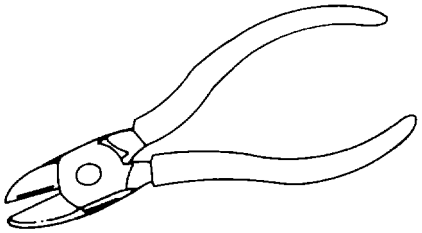

Figure 4-42. Diagonal Cutting Pliers

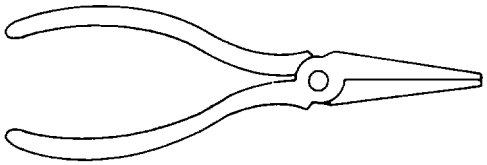

Figure 4-43. Long-Nose Pliers

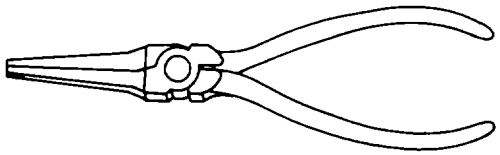

Figure 4-44. Flat-Nose Pliers

(5) *Round-nose pliers*. The round-nose pliers are used to crimp flanges on sheet metal in the process of shrinking, and for making loops in soft wire. It has smooth, round jaws, a fixed pivot, and curved handles which may have insulated sleeves. It is shown in figure 4-45.

(6) *Crimping pliers*. Crimping pliers have practically the same design as ordinary round-nose pliers. Because a crimp in sheet metal is made by twisting rather than clamping, they are constructed of heavier material to withstand heavy side loads induced by the twisting motion.

(7) *Water pump pliers*. Water pump pliers, sometimes referred to as channel lock pliers, are used for their powerful grip and ability to adjust to several different sizes. As figure 4-46 shows, there are two adjustment methods used with this type of pliers.

(8) *Vise-grip pliers*. Vise-grip pliers have a clamping action which allows them to be clamped onto an object. They will stay there and free the other hand for other work. These pliers, shown in figure 4-47, are sometimes made with a clamp-type jaw which allows them to be used for clamping sheet metal. The vise-grip pliers can be adjusted by turning the knurled adjustment screw until the desired jaw dimension is reached.

NOTE

Vise-grip pliers should be used with care since the teeth in the jaws tend to damage the object on which they are clamped. Do not use them on nuts, bolts, tube fittings, or other objects which must be reused.

b. *Use*. Pliers come in various sizes and should be selected according to the job being performed. They should never be used as a substitute for a wrench, because this practice batters nut and jaw serrations unnecessarily. Although there are several uses for pliers, they are not an all-purpose tool and should not be used as a pry bar or for hammering.

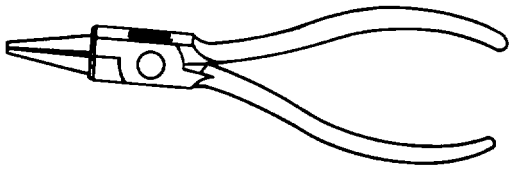

Figure 4-45. Round-Nose Pliers

c. *Repair*. Generally speaking, repair of pliers is limited to grinding or filing cutting or holding surfaces. Further repair of pliers is usually impractical when compared with the replacement cost.

(1) *Grinding*. It is possible to grind or sharpen some types of side cutting pliers. However, they should be examined closely to see if they still close properly after the material is ground away from the cutting edges. Do not attempt to grind pliers not designed to be ground. Grind cutting edges so that ground bevel is approximately at right angles to inside machined bevel. Grind sparingly, and remove the same amount of stock from both jaws. Cool often in water to preserve temper.

(2) *Renewing serrations*. Jaw face serrations may be renewed by placing pliers in a vise and renewing serrations with a 4-or 5-inch, three-cornered file.

d. *Care*. Observe the following practices for the care and upkeep of pliers:

(1) Remove dirt and grease with a clean rag and apply a light coat of oil after each use.

(2) Store pliers in a tool box or hang on racks when not in use.

(3) Do not remove insulation on handles or oil handles which are insulated.

(4) Do not use pliers for prying or for removing nuts or bolts.

(5) Replace all pliers which have broken jaws, handles, or cutting edges.

4-6. Awls. Awls are used in aircraft maintenance to align holes, as in the installation of a deicer boot, and to place scribe marks on metal and plastic surfaces. A typical awl is shown in figure 4-48.

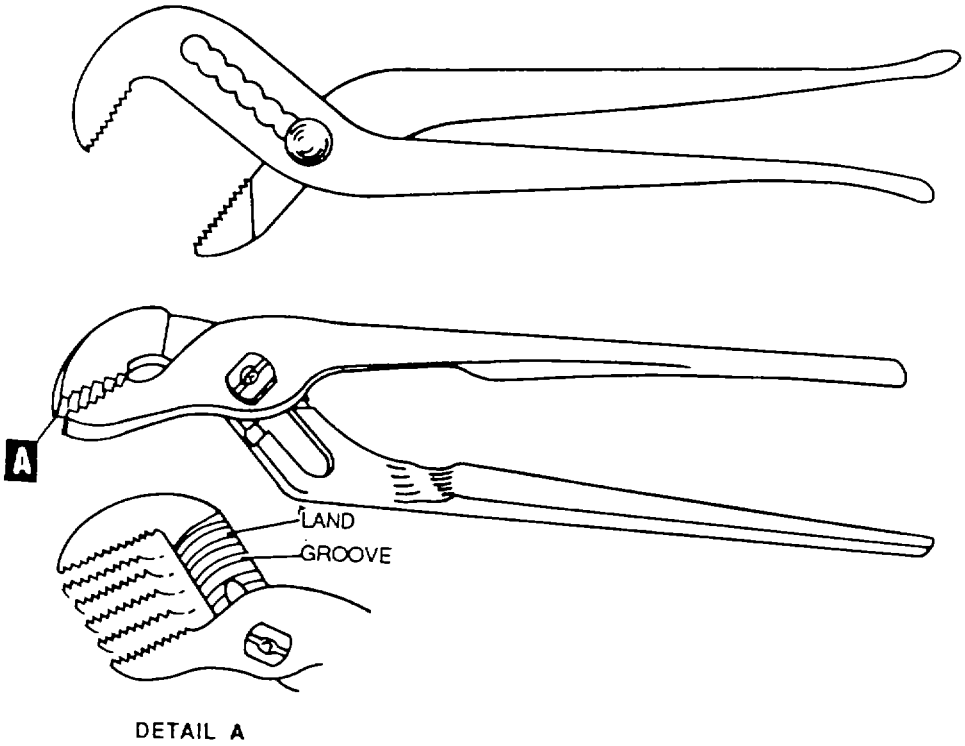

Figure 4-46. Water Pump Pliers

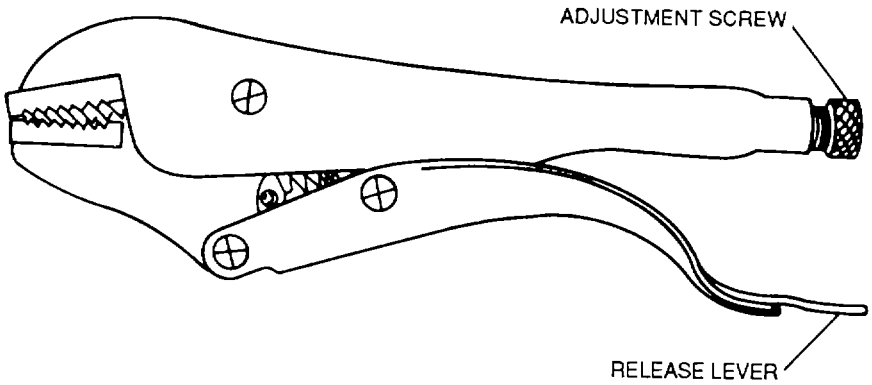

Figure 4-47. Vise-Grip Pliers

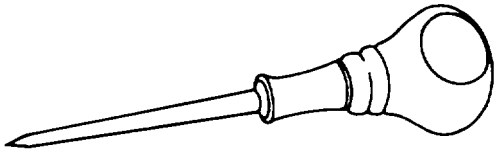

Figure 4-48. Awl

a. *Use* The following steps provide procedures for one use of an awl:

(1) Place the metal to be scribed on a flat surface. Place a ruler or straightedge on the guide marks already measured and placed on the metal.

(2) Remove the protective cover from the awl.

(3) Hold the straightedge firmly. Hold the awl as shown in figure 4-49, and scribe a line along the straightedge.

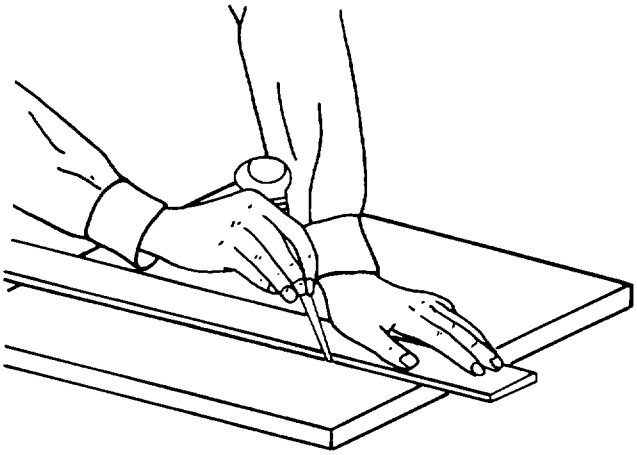

Figure 4-49. Scribing with an Awl

(4) Replace the protective cover on the awl.

b. *Repair*. The normal order for reconditioning an awl blade is to harden, grind, and sharpen. Usually all three operations are not needed.

(1) *Hardening.* Hardening and tempering are only required if the tempered part has been broken or ground away, or if the tool has been overheated. Harden and temper in accordance with the hardening and tempering instructions for screwdrivers in paragraph 4-3d (3).

(2) *Grinding and sharpening.* Grind or sharpen after tempering and hardening, or if the blade has lost its shape from repeated sharpening.

c. *Care*. Observe the following practices for the care and upkeep of awls:

(1) Keep points covered when not in use and stow awls in racks or in tool boxes.

(2) Lightly oil metal parts before storing.

4-7. Knives. Most knives are used to cut, pare, and trim wood, leather, rubber, and other soft materials.

a. *Types*. The types that the aircraft repairer will probably encounter are the shop knife, pocket knife, and the putty knife.

(1) *Utility knife*. The utility knife can be used to cut cardboard, and paper. It has an aluminum handle, and is furnished with interchangeable blades which are stored in the handle. A typical utility knife is shown in figure 4-50.

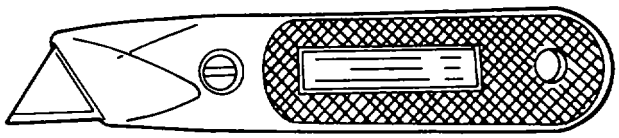

Figure 4-50. Utility Knife

(2) *Pocket knife*. Pocket knives are used for light cutting, sharpening pencils, cutting string, and whittling. They are not suitable for heavy work. There are many styles and shapes as shown in figure 4-51. Some are multipurpose and have an assortment of blades which are used for forcing holes, driving screws, opening cans, as well as cutting. The blades are hinged and contained within the case when not in use and are spring loaded to keep them firmly in place when open or closed.

(3) *Putty knife*. A putty knife is used for applying putty compound, sealant and for scraping gasket material. The blade has a wide square point and is available in different lengths and widths. A typical putty knife is shown in figure 4-52.

b. *Safety*. It is common knowledge that knives are usually sharp and can cause serious injury if improperly used. Observe the following precautions when using knives:

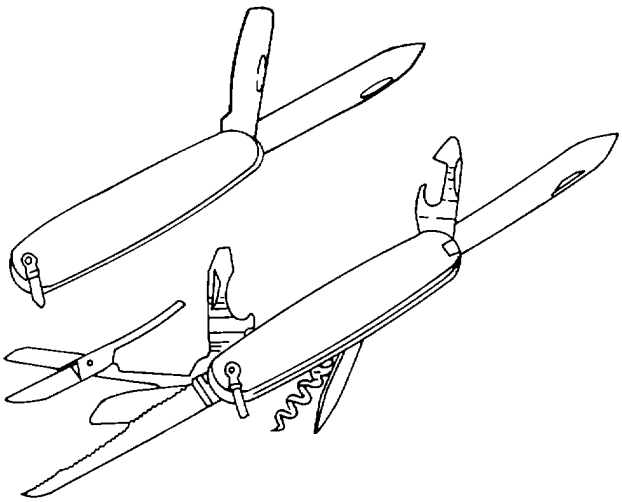

Figure 4-51. Pocket Knives

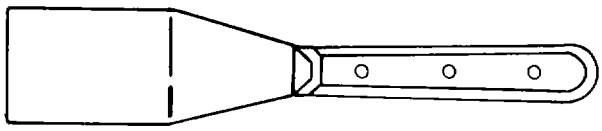

Figure 4-52. Putty Knife

- Do not use knives which are larger than can be handled safely to cut the work.
- Use knives only for the purpose for which they were designed.
- Always cut away from the hands and body.
- Do not carry open knives in pockets.
- Do not leave knives in such a position that they will cause injury to others.

c. *Care*. Observe the following practices for the care and upkeep of knives:

(1) Sharpen blades by stroking them with an oilstone moistened with a few drops of engine oil, MIL-L-6082.

(2) Store knives in sheaths or other containers to prevent the cutting edges from contacting other hard objects.

(3) Lightly coat all metal parts with a thin film of oil to prevent rust.

(4) For long-term storage, apply a thin film of rust-preventive compound on all metal parts and store in a dry place.

4-8. Clamping Devices. Vises and clamps are used to hold objects being worked to a definite size and shape. The objects must be held firmly while the work is being performed. The bench vise and the carriage clamp are the clamping devices most widely used in aircraft maintenance.

a. *Bench Vise*. The bench vise, shown in figure 4-53, is a large steel vise with rough jaws that prevent the work from slipping. Most vises of this type have a swivel base so that the upper portion can be rotated. The bench vise is usually bolt-mounted onto a bench.

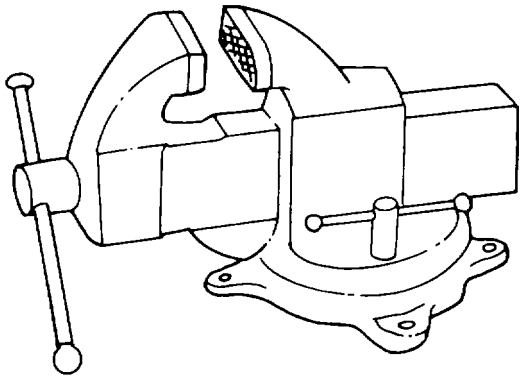

Figure 4-53. Bench Vise

(1) *Use*. The following steps are general procedures for using a bench vise:

WARNING

Ensure that the vise is bolted securely to a bench or table and that the swivel base is locked before using. Failure to comply may result in the vise falling off the surface and causing damage to equipment and injury to personnel.

(a) Open the jaws of the vise wide enough to insert the object to be held.

CAUTION

Install brass or copper caps on the vise jaws to prevent scratching and denting of soft substances when clamping. Highly polished surfaces may be protected by pieces of rawhide or leather.

(b) Insert the object to be clamped between the vise jaws, and tighten the jaws by turning the handle, as shown in figure 4-54.

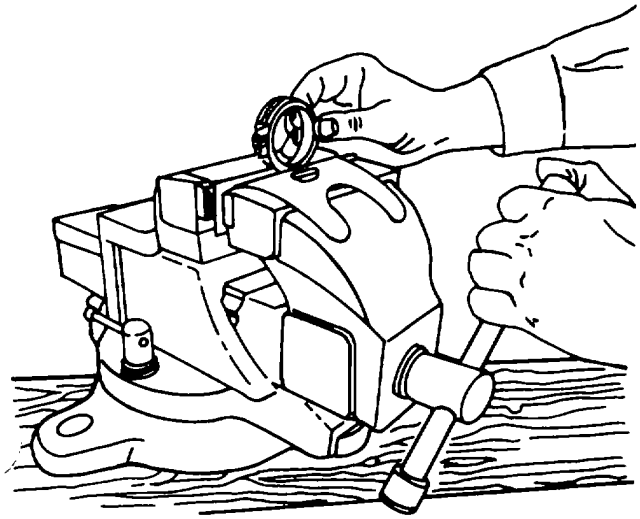

Figure 4-54. Using a Bench Vise

NOTE

Work should be held firmly in place, but the jaws should not be so tight that they mar the finish.

(2) *Care*. Observe the following practices for the care and upkeep of bench vises:

(a) Clean with a rag after each use, and apply a light coat of oil.

(b) Keep the jaws in good condition.

(c) Never oil the swivel base or the swivel joint, because this decreases its holding power.

(d) When not using a vise, bring the jaws lightly together and leave the handle in a vertical position. This will protect the jaws.

b. *Carriage Clamps*. The carriage clamp, commonly called a C-clamp, is constructed in the shape of a large C, as shown in figure 4-55. It is tightened by use of a screw threaded through one of the bars and has a swivel plate to prevent the end of the screw from turning against the item being clamped. C-clamps are used to hold work which cannot be held in a vise, or which has to be held for an extended period of time. They are available in a variety of sizes.

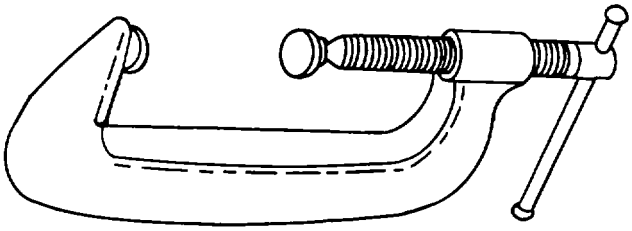

Figure 4-55. Carriage Clamp

(1) *Use*. The following paragraphs contain general procedures for the use of C-clamps:

(a) Select a clamp which has an opening about 1 1/2 to 2 inches wider than the object to be clamped.

(b) Open clamp as wide as it will go.

CAUTION

Some items, such as glass and highly polished objects, must be protected to prevent localized stress and damage. Use brass shims or wooden blocks to provide this protection.

(c) Align the work and the protective shims (if required).

(d) As shown in figure 4-56, place the clamp in position, and tighten the operating screw until contact is made with the item being clamped.

NOTE

The above procedure should only obtain a very light contact with the item.

(e) Check the alignment of the item being clamped. Ensure that the clamp is applying even pressure over the entire surface.

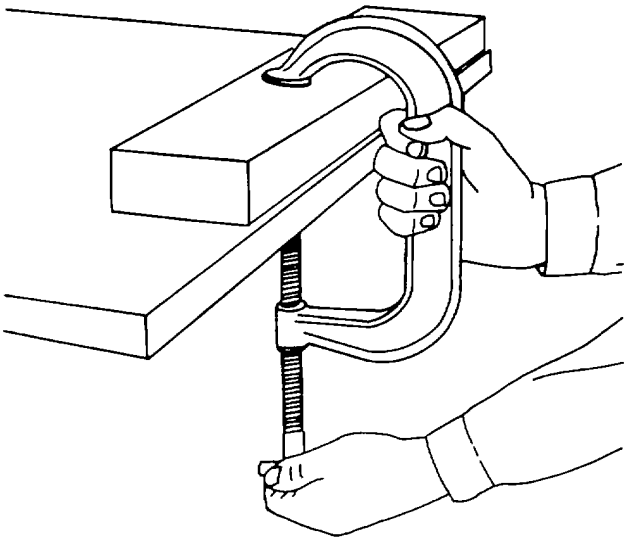

Figure 4-56. Using Carriage Clamp

CAUTION

Do not use wrenches or bars to tighten clamps. Excessive pressure will result in damage to the item being clamped.

(f) Tighten the clamp against the surface.

(2) *Care*. Observe the following practices for the care and upkeep of C-clamps:

(a) Clean threads and swivel with a rag, and lubricate with a light coat of oil.

(b) Store on a rack, on pins, or in a tool box.

(c) For long storage periods, apply a rust-preventive compound.

4-9. Cold Chisels. A chisel is a tool having a cutting edge at the end of a metal blade and is used in dressing, shaping, and working metal. The cold chisel derives its name from the fact that it can be used to cut metal that has not first been softened by heating. It is usually made of carbon steel with a tempered cutting edge.

a. *Types*. The most common types of cold chisel are the flat, cape, roundnose, and diamond types, shown in figure 4-57.

(1) *Flat chisel*. The flat chisel is used to split nuts, chip castings, and cut rivets and thin metal sheets.

(2) *Cape chisel*. The cape chisel is used for special jobs like cutting keyways, narrow grooves, and square corners.

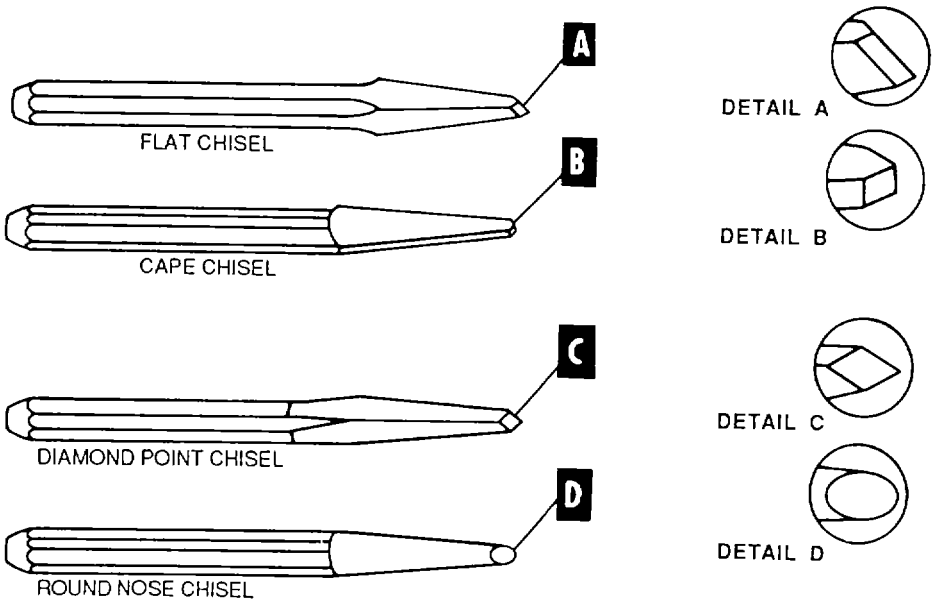

Figure 4-57. Chisels

(3) *Round-nose chisel*. Round-nose chisels make circular grooves and chip inside corners with a fillet.

(4) *Diamond-point chisel*. The diamond-point chisel is used to cut V-grooves and sharp corners.

b. *Repair*. Nicked or battered chisels may be repaired by grinding. If necessary, temper can also be restored.

(1) *Grinding*. Chisels are usually ground to a 70-degree angle, but that may be as high as 90-degrees for harder substances. Proceed as follows:

(a) Set the rest on the grinding wheel to adjust for the desired bevel.

WARNING

Eye protection will be worn when grinding chisels. Failure to comply may result in serious injury to personnel.

(b) Move the chisel from side to side while grinding so that the cutting edge will be slightly curved.

(c) Ensure that the bevels are kept centered or the cutting edge will not be centered.

(d) Preserve temper by dipping frequently in water.

(2) *Retempering*. If temper has been lost during grinding, retemper as follows:

(a) Heat the entire chisel to cherry red in a gas furnace or a charcoal fire.

(b) Grasp the chisel in the center with tongs and dip the cutting end in clean, cold water to a depth of 1 1/4 inch.

(c) Turn the chisel and dip the head in the water to a depth of about 1 inch.

(d) Quickly polish the hardened ends with a file or abrasive cloth, Federal Specification P-C-451, and observe the color returning from the heated center of the chisel to the ends.

(e) Dip the cutting end each time it becomes purple, and the head each time it becomes blue.

(f) When the red disappears, dip the entire chisel.

c. *Care*. Observe the following practices for the care and upkeep of chisels:

(1) Protect the cutting edges by installing protective covers.

(2) Store in racks or where they may not be chipped or broken.

(3) Lubricate with a light coat of oil before storing.

(4) Regrind broken or chipped edges before using.

4-10. Punches. Punches usually are made of carbon steel tempered on both ends. They generally are classified as solid punches and hollow punches and are designed according to their intended use. Hollow punches vary in size. Solid punches vary both in size and in point design.

a. *Solid Punches*. Solid punches are named according to their shape and are designed for various purposes.

(1) *Types and uses*. The following paragraphs describe the common types of punches used in aircraft maintenance.

(a) *Prick punch*. A prick punch, shown in figure 4-58, is used to place reference marks in metal. It is also often used to transfer dimensions from a paper pattern directly onto the metal. It is relatively slender and is tapered to a point of about 30 degrees. The following precautions should be taken when using a prick punch

- Never strike a prick punch a heavy blow with the hammer because it could bend the punch or cause excessive damage to the item being worked.

- Do not use a prick punch to remove objects from holes because the point of the punch will spread the object and cause it to bind even more.

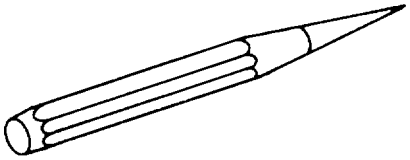

Figure 4-58. Prick Punch

(b) *Center punch*. A center punch, shown in figure 4-59, is used to make large indentations in metal of the kind needed to start a twist drill. This punch has a heavier body than the prick punch and its point is ground to an angle of about 60 degrees. The following precautions should be taken when using a center punch:

- Never strike the center punch with enough force to dimple the item around the indentation or cause the metal to protrude through the other side of the sheet.

- Like the prick punch and for the same reason, a center punch must never be used to remove objects from holes.

(c) *Automatic center punch*. The automatic center punch, shown in figure 4-60, is used only to indent metal to make starting points for twist drills. It contains an inside mechanism that automatically strikes a blow of the required force when the user places the punch exactly where he wants it and pushes it by pressing on it with his hand. This punch has an adjustable cap for regulating the stroke; the point can be removed for regarding or replacement. Never strike an automatic center punch with a hammer.

(d) *Drive punch*. The drive punch, shown in figure 4-61, is often called a taper punch. It is used to drive out damaged rivets, pins, and bolts, which sometimes bind in holes. Therefore, the drive punch is made with a flat face instead of a point. The size of the punch is determined by the width of the face, usually one eighth to one-quarter inch.

(e) *Pin punch*. A pin punch, shown in figure 4-62, is also often called a drift punch. It is similar to a drive punch and is used for the same purpose. The difference between the two is that the shank of a drive punch is tapered all the way to the face, while the pin punch has a straight shank. Pin punch points are sized in thirty-seconds of an inch and range from one-sixteenth to three-eighths inch in diameter. The usual method for driving out a pin or bolt is to start working it out with a drive punch, which is used until the shank of the punch is touching the sides of the hole. A pin punch is then used to drive the pin or boft the rest of the way out of the hole.

Pins and bolts or rivets that are hard to dislodge may be started by placing a thin piece of scrap copper, brass, or aluminum directly against the pin and then striking it with a heavy hammer until it begins to move.

(f) *Transfer punch*. The transfer punch shown in figure 4-63 is used to transfer the holes through the template or patterns to the item. This punch is usually about 4 inches long. Its point is tapered at the back and then turns straight for a short distance to fit the drill-locating hole in a template. The tip ends in a point like that of a prick punch.

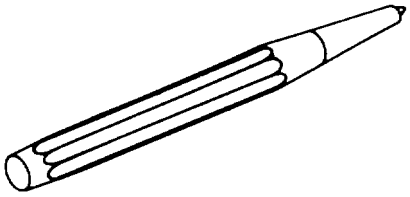

Figure 4-59. Center Punch

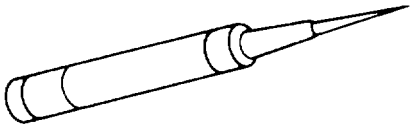

Figure 4-60. Automatic Center Punch

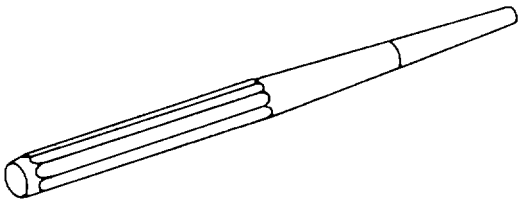

Figure 4-61. Drive Punch

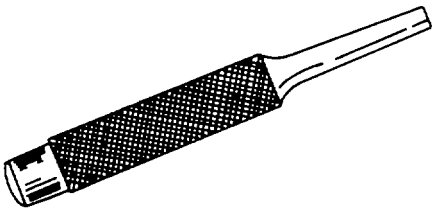

Figure 4-62. Pin Punch

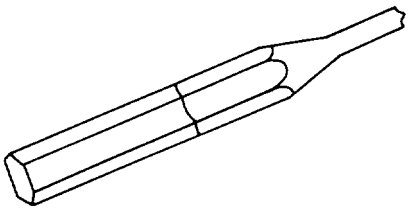

Figure 4-63. Transfer Punch

(2) *Repair*. Punches can be repaired by grinding and retempering.

(a) *Grinding*. Pin, drive, or other blunt end punches must be ground so that the end is perfectly flat and at right angles to the centerline of the punch. Center punches and prick punches are ground to conical points of 60 degrees and 30 degrees, respectively. To grind a center or prick punch, proceed as follows:

WARNING

Eye protection will be worn when grinding punches. Failure to comply may result in serious injury to personnel.

1 Adjust the rest of the grinding wheel so that the punch meets the face of the wheel at the desired angle.

2 Rotate the punch while grinding in order to make the point symmetrical.

3 Preserve temper by dipping frequently in water.

(b) *Retempering*. Punches which have been overheated or ground back past the hardened ends may require tempering. The procedure for tempering punches is the same as that for tempering chisels outlined in paragraph 4-9b(2).

(3) *Care*. Observe the following practices for the care and upkeep of solid punches:

(a) Clean punches with a clean rag after each use.

(b) Apply a light coat of oil before storing.

(c) Store punches so that the edges will not be damaged.

(d) Repair mushroomed heads in accor-dance with paragraph (2), or replace if necessary.

b. *Hollow Punches*. Hollow punches are used to cut holes in thin, soft metal or other items such as rubber, cork, leather, or paper. Figure 4-64 shows a typical hollow punch.

(1) *Use*. The following procedures describe the process of cutting a hole in sheet metal. Proceed as follows:

(a) Mark the center of the intended hole with a prick punch.

(b) Inscribe a circle around the center mark with a pair of dividers.

(c) Choose a hollow punch of the correct size and place the cutting edge over the inscribed circle.

(d) With the metal sheet resting on a block of wood, strike the punch with a hammer until the hole is cut through the metal.

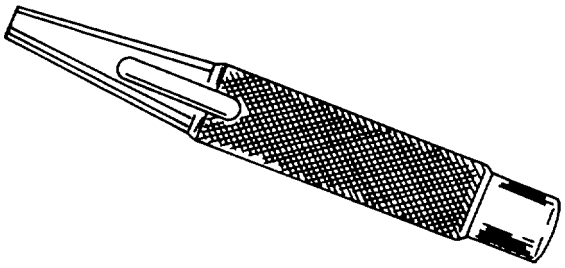

Figure 4-64. Hollow Punch

(2) *Care*. Observe the following practices for the care and upkeep of hollow punches:

(a) Clean punches with a clean rag after each use.

(b) Apply a light coat of oil before storing.

(c) Store punches so that the edges will not be damaged.

4-11. Files. Files are hardened steel tools for cutting, removing, smoothing, or polishing metal. The cutting edges (or teeth) are made by diagonal rows of chisel cuts. The parts of a file are shown in figure 4-65.

a. *Types*. Files can be classified by grade and shape.

(1) *Grade*. Files are graded according to whether they have single or double-cut teeth, and the degree of fineness.

(a) *Single and double-cut teeth*. The difference between single and double-cut teeth is apparent in figure 4-66.

1 *Single-cut*. Single-cut files have rows of teeth cut parallel to each other. These teeth are set at an angle of about 65 degrees from the centerline. These files are used for sharpening tools, finish filing, and draw filing. They are also the best tools for smoothing the edges of sheet metal.

2 *Double-cut*. Double-cut files have crossed rows of teeth. The double cut forms teeth that are diamond-shaped and fast cutting. These files are used for quick removal of metal, and for rough work.

(b) *Degree of Fineness*. Files are also graded according to the spacing and size of their teeth, or their coarseness and fineness. Shown in figure 4-67, the usual grades of fineness are called bastard, second cut, smooth, and dead smooth. The fineness or coarseness is influenced by the length of the file.

(2) *Shape*. Files come in different shapes. When selecting a file for a job, the shape of the finished work must be considered. The more common file shapes are described in the following paragraphs.

(a) *Triangular files*. Triangular files are tapered toward the point on all three sides, as shown in

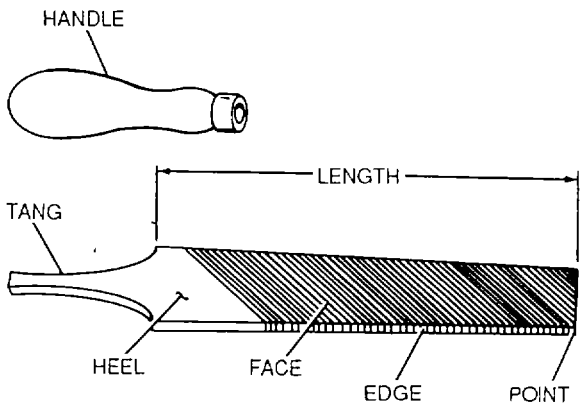

Figure 4-65. File Nomenclature

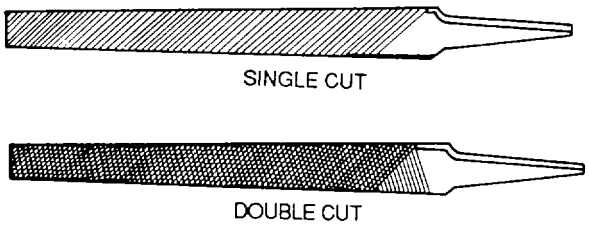

Figure 4-66. Single-and Double-Cut File Teeth

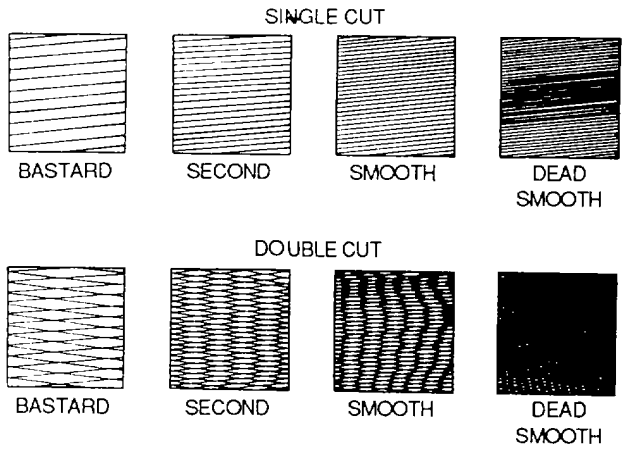

Figure 4-67. File Teeth Spacing and Fineness

figure 4-68. They are used to file acute internal angles, and to clear out square corners. Certain triangular files are used to file saw teeth.

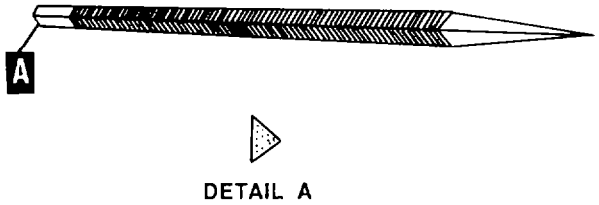

Figure 4-68. Triangular File

(b) *Mill files*. Mill files are tapered in both width and thickness. One edge has no teeth and is known as a safe edge. Mill files, like the one shown in figure 4-69, are used for smoothing lathe work, draw filing, and other precision work. They are always singlecut.

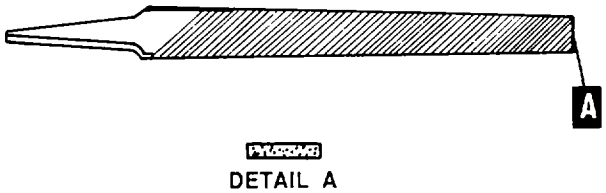

Figure 4-69. Mill File

(c) *Flat files*. Flat files, shown in figure 4-70, are general-purpose files and may be either single or double-cut. They are tapered in width and thickness. Double-cut files are usually used for rough work, and single-cut, smooth files are used for finish work.

(d) *Square files*. Square files, shown in figure 4-71, are tapered on all four sides and are used to enlarge rectangular holes and slots.

(e) *Round files*. Round files serve the same purpose for round openings. Atypical round file is shown in figure 4-72. Small round files are often called rattail files.

(f) *Half-round file*. The half-round file is a general purpose tool. The rounded side is used on curved surfaces, and the flat side is used on flat surfaces. When filing an inside curve, use a file whose curve most nearly matches the curve of the work. This file is shown in figure 4-73.

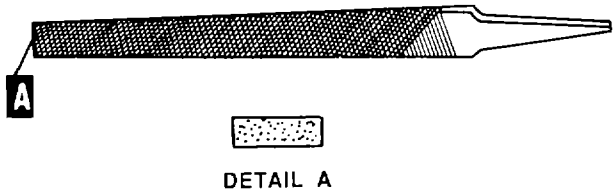

Figure 4-70. Flat File

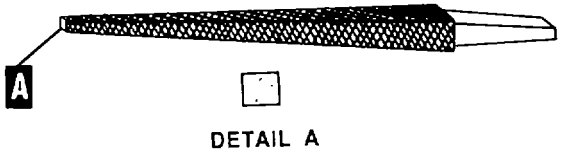

Figure 4-71. Square File

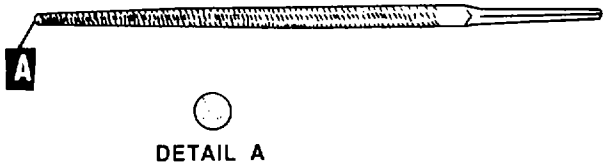

Figure 4-72. Round File

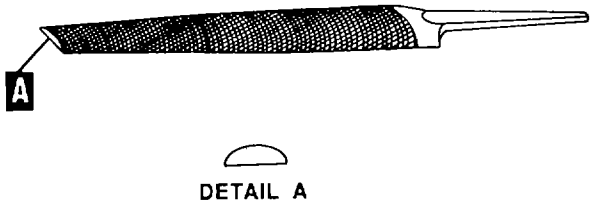

Figure 4-73. Half-Round File

(3) Curved-tooth files. Curved-tooth files are generally used on aluminum and sheet steel and on both flat and curved surfaces. They are also used for smooth, rapid work on bronze, lead, babbitt, zinc and plastic. The teeth come standard-cut and smooth-cut. This type of file is shown in figure 4-74.

b. <u>*Safety*</u>. The following paragraphs discuss several important safety considerations regarding the use of files.

Figure 4-74. Curved Tooth File

* If the file is designed to be used with a handle, do not attempt to use it without the handle. Holding the tang of the file in the hand while filing may result in serious injury (see figure 4-75).

* Do not use a file for prying. The tang end is soft and bends easily, while the body of the file is hard and brittle, and will snap under a very light bending force.

* Do not hammer on a file. This may cause the file to shatter.

c. Selection. Certain file grades are most effective on certain metals. Following are the suggested grades of files that should be used on the applicable metals.

NOTE

* For heavy, rough cutting, use a large, coarse, double-cut file.

* For finishing cuts, use a second- or smooth-cut, single-cut file.

* For small work, use a short file. For medium-sized work, use an 8-inch file. For large work, use a file that is most convenient.

(1) Cast iron. When working on cast iron, start with a bastard-cut file and finish with a second-cut file.

(2) Soft metal. When filing soft metal, start with a second-cut file and finish with a smooth-cut file.

(3) Hard steel When filing hard steel, start with a smooth-cut file, and finish with a dead-smooth file.

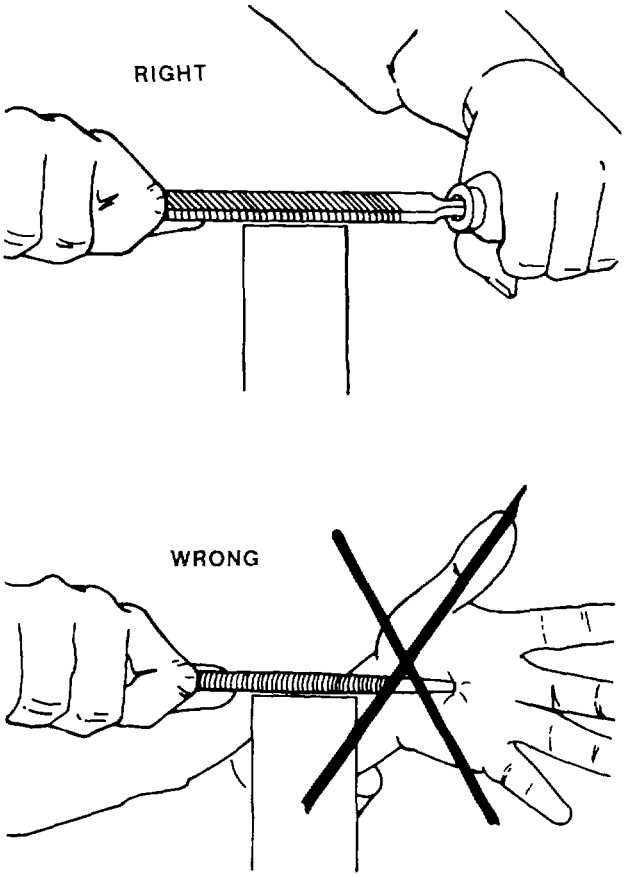

Figure 4-75. Use of File Handle

(4) Brass or bronze. When filing brass or bronze, start with a bastard-cut file and finish with a secondor smooth-cut file.

(5) *Aluminum, lead, or babbitt*. When filing aluminum, lead, or babbitt metal, use a standard-cut curved tooth file.

d. Use. Using a file is an operation that is nearly indispensable when working with metal. Most filing operations can be classified as crossfiling and drawfiling. There are some precautions, however, that must be taken when filing.

* The strokes with the file should be long and smooth and there should not be more than 40 strokes per minute to prevent overheating of the teeth.

* There should be no pressure on the file as it is being drawn back. The teeth slant forward and back stroke pressure will cause them to break more readily than on the forward stroke. However, when filing very soft metal such as aluminum, a slight back stroke pressure will aid in cleaning the teeth.

(1) Using a new file. When a new file will be used, observe the following precautions:

* Never use a new file to remove the fins and scales on cast iron.

* Do not use a new file on a narrow surface such as sheet metal, because the narrow edge of the metal is likely to break off the sharp points of the file teeth.

* A new file should be broken in by using it first on brass, bronze, or smooth iron.

* After using a new file, the teeth will clog up with metal filings which will scratch the work. One way to prevent this condition is to rub chalk between the teeth before filing.

(2) Crossfiling. Crossfiling means that the file is moved across the surface of the work in an approximate crosswise direction. This is shown in figure 4-76. To use this method, proceed as follows:

(a) Clamp the work securely in a vise so that the area to be filed is horizontal and is parallel to and projecting slightly above the vise jaws.

(b) File with slow, full-length, steady strokes.

(c) When an exceptionally flat surface is required, hold the file at an angle and file across the entire length of the stock. Then, turn the file as shown in figure 4-77, and file across the entire length of the stock again. Because the teeth of the file pass over the stock in two directions, the high and low spots will be readily visible after filing in both positions.

(d) Continue filing in one position and then the other until the surface has been filed flat.

(e) Test the flatness with a straightedge or with prussian blue and a surface plate.

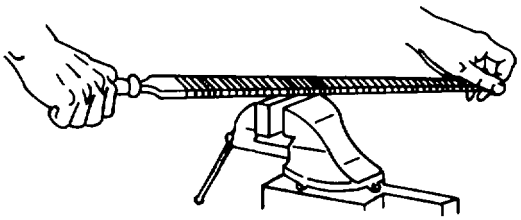

Figure 4-76. Crossfiling

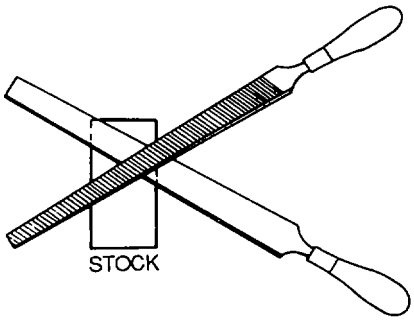

Figure 4-77. Filing for a Flat Surface

(3) Drawfiling. Drawfiling produces a finer surface finish and usually a flatter surface than crossfiling. See figure 4-78 and proceed as follows:

(a) Install small parts in a vise.

(b) Hold the file as shown in figure 4-78. The cutting stroke is away from the body when the file handle is held in the right hand. If the handle is held in the left hand, the cutting stroke will be toward the body.

NOTE

Hold the file at right angles to the direction of the stroke, and keep hands relatively close together to prevent bending the file.

(c) Keep the pressure light. The pressure can remain the same for both the cutting stroke and the return stroke. The speed of filing is not important.

(d) When drawfiling no longer improves the surface texture, wrap a piece of abrasive cloth, Federal Specification P-C-451, around the file and stroke in the same manner.

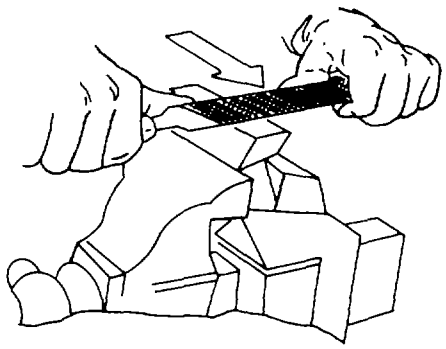

Figure 4-78. Drawfiling

e. Handle Installation. A file should never be used without a firmly attached handle. The following paragraphs describe the installation and removal procedures for file handles.

(1) Installation. Handles are installed on files as follows:

(a) Select a handle that will fit the tang snugly.

(b) Wet the tang with water and insert it into the handle.

CAUTION

Never hammer a file into its handle, because the tang can bend or the file can break.

(c) Tap the end of the handle on a flat surface until the file is properly seated.

(2) Removal. To remove the handle, proceed as follows:

(a) Hold the file with the left hand and the handle with the right hand.

(b) Pull the file from the handle while rapping the ferrule end of the handle against the edge of a bench.

f. Care. Observe the following practices for the care and upkeep of files:

(1) Break in a new file as discussed in paragraph 4-11d(1).

(2) Clean files using the file cleaner shown in figure 4-79.

(3) Never strike the file against a vise or other object to remove filings. Use the file cleaner.

(4) Do not oil files. This will cause the file to slide across the work, preventing efficient cutting.

(5) Wrap each file in a waterproofed barrier wrapping paper. Place the files in racks or boxes so that the faces or edges of the files will not touch each other.

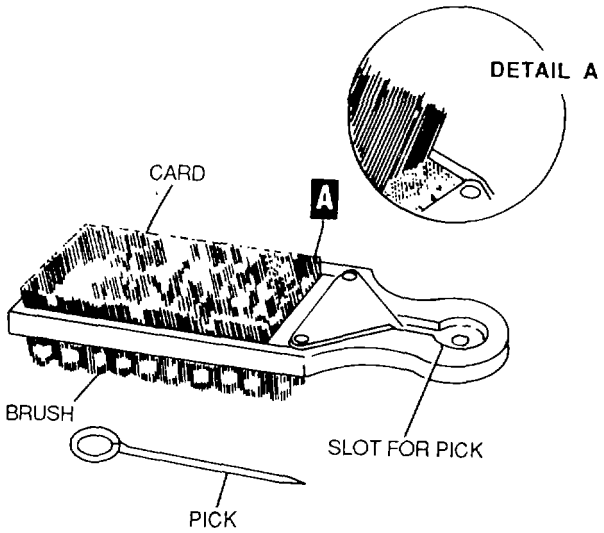

Figure 4-79. File Cleaner

4-12. Hand Drills. Hand drills are used when electric or pneumatic power is not available. These drills provide a somewhat slower drilling speed because they are hand-powered.

a. Types. There are two types of hand drills used in Army aircraft maintenance. They are the breast, and hand drills.

(1) Breast drill. The breast drill has a base for the user to lean against while using the drill. It has a speed shifter which provides a means of selecting low or high drill speeds. The low drill speed has a 1:1 gear ratio, and the high speed ratio is 3-1/2:1. This drill, shown in figure 4-80, is used to drill holes in wood, plastic, and small gauge sheet metal.

(2) Hand drill. The hand drill, shown in figure 4-81, has a handle to provide pressure by hand. This drill is used to drill holes in wood and sheet metal, and

is generally the most common of the hand drills used in Army aircraft maintenance.

b. Use. The following paragraphs describe the techniques for using hand drills.

(1) Placing bit in chuck. To place the drill bit in the chuck, proceed as follows:

(a) Hold the shell of the chuck while turning the handle to open the jaws.

(b) When the jaws are apart far enough to accept the drill bit, insert it until the end seats in the bottom of the chuck.

(c) Tighten the chuck by turning the handle to close the jaws. Ensure that the bit is firmly seated within the V-grooves machined into the jaws, as shown in figure 4-82.

(2) Breast drill. Proceed as follows:

(a) Turn the crank handle with one hand while holding the side handle with the other hand.

(b) Apply feed pressure by leaning against the breast plate.

(3) Drilling. When drilling with the hand drill, operate the crank with one hand, and with the other hand guide the drill by holding the handle on the end of the drill.

c. Care. Observe the following practices for the care and upkeep of hand drills:

(1) Apply a light coat of oil to all metal surfaces.

(2) With a rag, clean gear teeth of dirt, wood, and metal shavings.

(3) Hang drills on a rack in a dry location.

4-13. Drill Bits. A drill bit is a pointed tool that is rotated to cut holes in material. It is made of carbon steel or harder alloy steels, depending upon the type of work required.

a. Description. A typical drill bit and its parts are shown in figure 4-83. Some of these parts are explained in the following paragraphs.

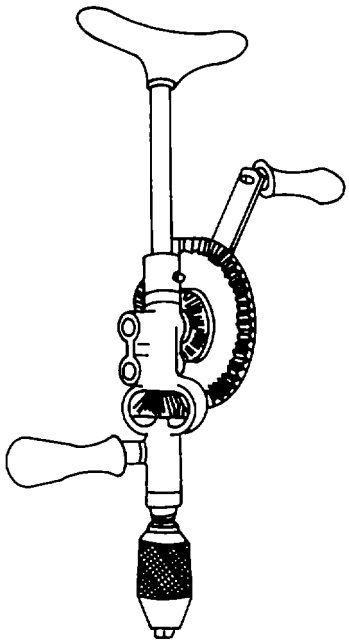

Figure 4-80. Breast Drill

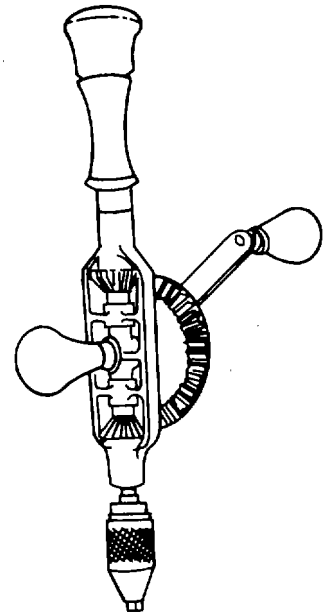

Figure 4-81. Hand Drill

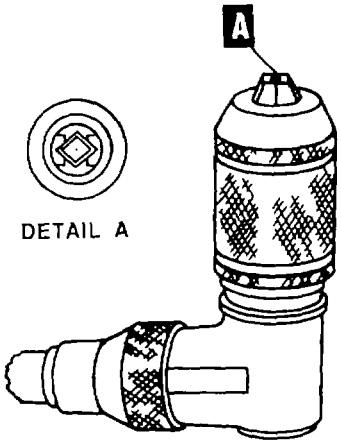

Figure 4-82. V-Grooves in Drill Jaws

(1) Lips. The lips are the parts which actually do the cutting.

(2) Flutes. The flutes allow the chips to escape, give the correct rake to the lips or cutting edges, and when it is necessary to use a lubricant, they allow the lubricant to reach the cutting edges.

(3) Body. The body of the drill is ground away slightly, except at the margin, to reduce the friction of the drill as it rotates.

b. Sizes. The letter, number, fractional, and decimal sizes of drill bits are shown in table 4-2.

c. Use. The following paragraphs outline the procedures for laying out and drilling holes.

(1) Laying out. When laying out work, mark hole locations as follows:

NOTE

Do not hit the center punch too hard because it will dent the surrounding metal. Place a bucking bar behind the metal to prevent denting.

(a) Locate the exact center of the hole to be drilled and mark with a prick punch.

(b) Enlarge the prick punch mark with acenter punch so that the point of the drill can seat properly. This is shown in figure 4-84.

(2) Drilling. To drill the item, proceed as follows:

(a) Place the drill in the center-punched mark. When using a powerdrill, rotate the bit a few turns before starting the motor.

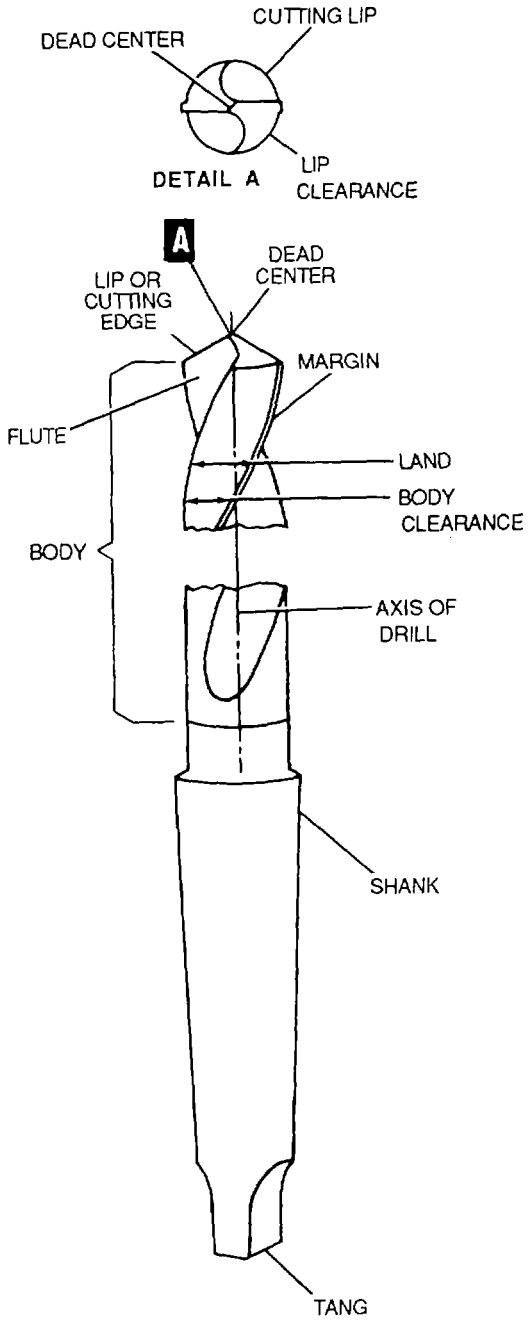

Figure 4-83. Typical Drill Bit

Table 4-2. Drill Sizes

Drill	Decimal	Drill	Decimal	Drill	Decimal	Drill	Decimal
80	0.0135	49	0.073	20	0.161	H	0.266
79	0.0145	48	0.076	19	0.166	I	0.272
78	0.016	5/64	0.078125	18	0.1695	J	0.277
1/64	0.0156	47	0.0785	11/64	0.171875	K	0.281
77	0.018	46	0.081	17	0.173	9/32	0.28125
76	0.02	45	0.082	16	0.177	L	0.29
75	0.021	44	0.086	15	0.18	M	0.295
74	0.0225	43	0.089	14	0.182	19/64	0.296875
73	0.024	42	0.0935	13	0.185	N	0.302
72	0.025	3/32	0.09375	3/16	0.1875	5/16	0.3125
71	0.026	41	0.096	12	0.189	O	0.316
70	0.028	40	0.098	11	0.191	P	0.323
69	0.0292	39	0.0995	10	0.1935	21/64	0.328125
68	0.031	38	0.1015	9	0.196	Q	0.332
1/32	0.03125	37	0.104	8	0.199	R	0.339
67	0.032	36	0.1055	7	0.201	11/32	0.34375
66	0.033	7/64	0.109375	13/64	0.203125	S	0.348
65	0.035	35	0.11	6	0.204	T	0.358
64	0.036	34	0.111	5	0.2055	23/64	0.359375
63	0.037	33	0.113	4	0.209	U	0.368
62	0.038	32	0.116	3	0.213	3/8	0.375
61	0.039	31	0.12	7/32	0.21875	V	0.377
60	0.04	1/8	0.125	2	0.221	W	0.386
59	0.041	30	0.1285	1	0.228	25/64	0.390625
58	0.042	29	0.136	A	0.234	X	0.397
57	0.043	28	0.1405	15/64	0.234375	Y	0.404
56	0.0465	9/64	0.140625	B	0.238	13/32	0.40625
3/64	0.046875	27	0.144	C	0.242	Z	0.413
55	0.052	26	0.147	D	0.246	27/64	0.421875
54	0.055	25	0.1495	E	0.25	7/16	0.4375
53	0.0595	24	0.152	1/4	0.25	29/64	0.453125
1/16	0.0625	23	0.154	F	0.257	15/32	0.46875
52	0.0635	5/32	0.15625	G	0.261	31/64	0.484375
51	0.067	22	0.157	17/64	0.265625	1/2	0.5
50	0.07	21	0.159				

WARNING

Use eye protection when drilling. Failure to comply may result in serious injury to personnel.

(b) Hold the drill at a 90-degree angle to the work and apply pressure while drilling.

NOTE

The amount of pressure to be applied while drilling depends on the size of the drill and the hardness of the metal being drilled.

(c) When the center punch mark has been cut away, lift the drill and examine the cut to ensure that it is in the required location. If it is not, the drill can be made to lead in the desired direction by cutting a groove in the side of the drilled portion with a cold chisel.

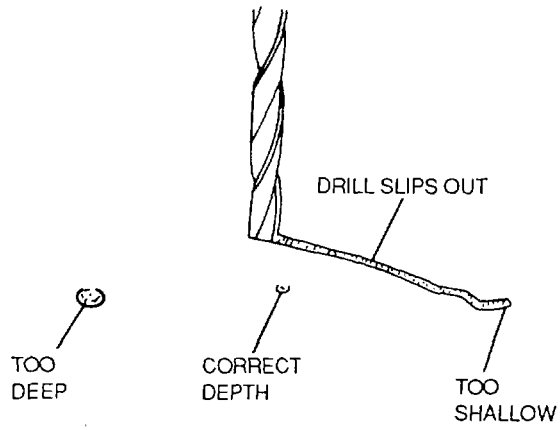

Figure 4-84. Center Punch for Drilling

NOTE

The drill cannot be made to lead after the entire point has entered the item.

(d) As the drill begins to emerge from the stock, release pressure on the drill so that it does not catch on the chips in the hole.

d. *Grinding*. When drills are worn or need to be modified for certain metals, they can be reground. They can be reground by machine or by hand.

(1) Machine grinding. The most accurate way to grind a drill is to use a machine designed for this purpose, shown in figure 4-85. This type of grinding is accomplished as follows:

(a) Adjust the machine to the desired cutting edge angle, usually 59 degrees, and correct heel angle, which is usually 12 to 15 degrees, as shown in figure 4-86.

(b) Place the drill bit on the V-blocks of the holder, shown in figure 4-85, and turn so that the drill cutting edge will contact the grinding wheel.

WARNING

Eye protection will be worn when grinding drills. Failure to comply may result in serious injury to personnel.

(c) With the grinding wheel turning, advance the tailstock until the drill makes contact with the wheel.

(d) Swing the holder spindle slowly through its arc.

(e) Without changing the tailstock adjustment, rotate the drill to bring the other cutting lip into position and grind it in the same manner.

(2) Hand grinding. Drills may be ground by hand, but only if a drill grinding machine is not available. Proceed as follows:

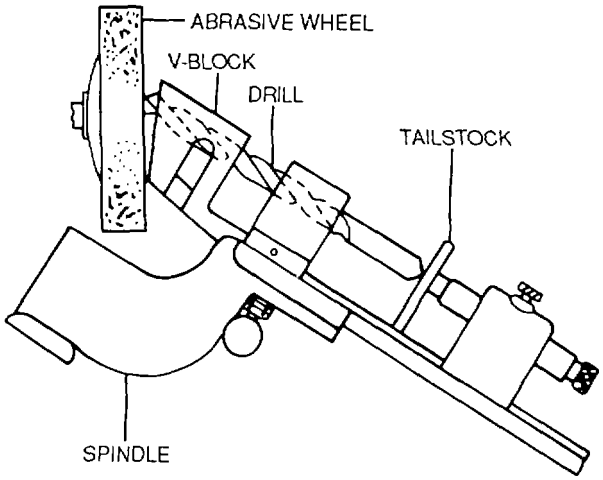

Figure 4-85. Machine Grinding a Drill Bit

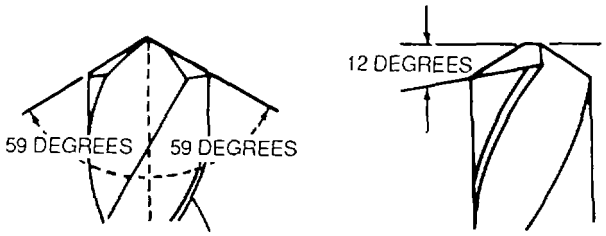

Figure 4-86. Usual Cutting Edge and Heel Angles

(a) Adjust the grinding wheel rest to a convenient height for resting the back of the hand while grinding.

(b) Hold the drill between the thumb and the index finger and grasp the body of the drill near the shank with the other hand.

WARNING

Eye protection will be worn when grinding drills. Failure to comply may result in serious injury to personnel.

(c) As shown in figure 4-87, place hand on the wheel rest with the centerline of the drill forming the desired angle with the cutting face of the wheel. Slightly lower the shank end of the drill.

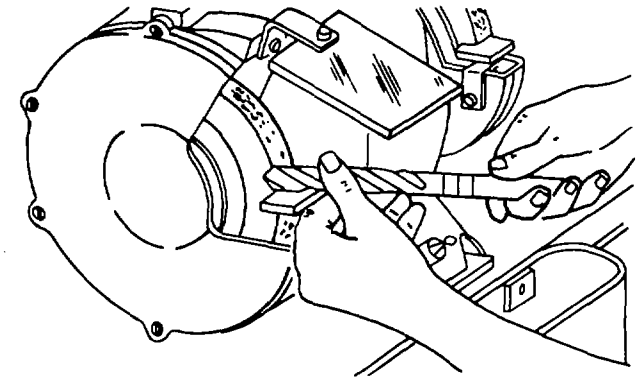

Figure 4-87. Hand Grinding of Cutting Edge

(d) Slowly place the heel of the drill against the grinding wheel, as shown in figure 4-88. Gradually raise the shank end of the drill and rotate it in a counterclockwise direction while the grinding wheel approaches the cutting edge.

(e) Cool the drill in water frequently while grinding to preserve the temper.

(3) Testing angles. Test the results of grinding with a drill grinding gauge to determine that the cutting edges are the same length and the angles are correct. This is shown in figure 4-89. To determine heel angle, proceed as follows:

(a) Cut a piece of paper 8-1/2 inches long and 2 inches wide.

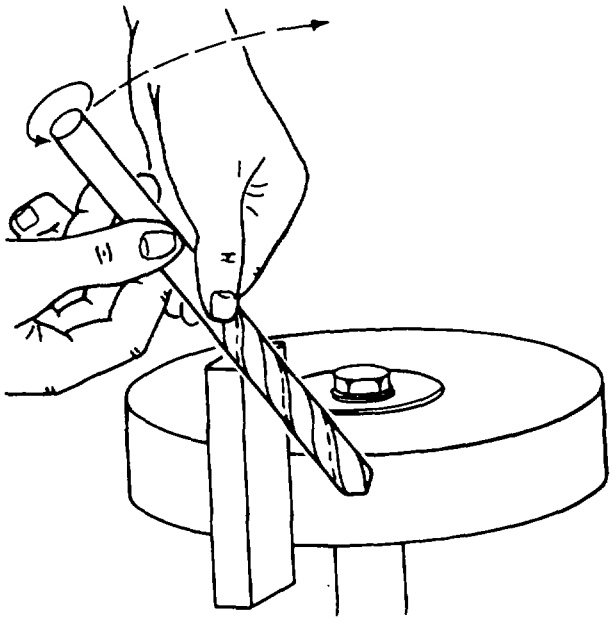

Figure 4-88. Hand Grinding of Heel to Cutting Edge

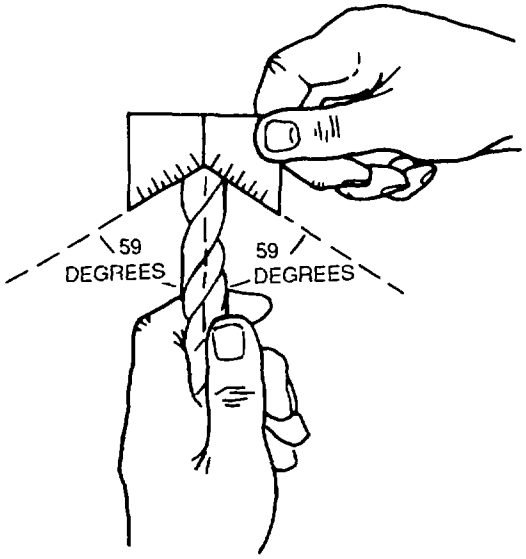

Figure 4-89. Using Drill Grinding Gauge

(b) Place a mark 1-1/4 inches from the top and wrap the paper around the drill.

(c) As shown in figure 4-90, the edge of the paper should coincide with the mark on the paper if the heel angle is correct.

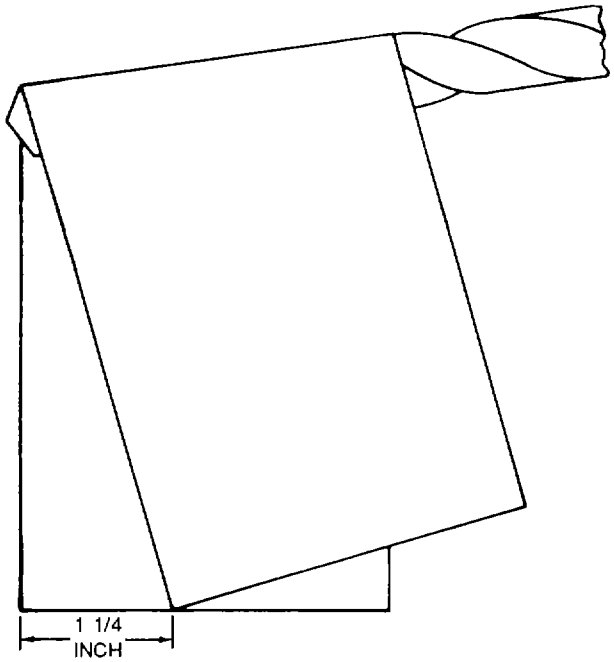

Figure 4-90. Measuring Heel Angle

e. Care. Observe the following practices for the care and upkeep of drill bits:

(1) Keep drill bits in proper storage to prevent sharp edges from striking each other.

(2) Remove foreign material with a clean rag after use.

(3) Apply a light coat of oil to prevent rust.

4-14. Reamers. A reamer is a cutting tool with one or more cutting surfaces used for enlarging to size and contour a previously formed hole. A reamer functions by removing a small amount of stock from the walls of a hole. To ream effectively, the diameter of a reamer must be greater than the hole to be reamed.

NOTE

Do not use the reamer to remove more than 0.002 to 0.003 inches of metal. If the hole is too small, enlarge it with a drill before reaming it.

a. Description. Figure 4-91 shows the parts of several types of reamers. The cutting face is the leading edge in the direction of rotation. Longitudinal channels (flutes) in the body of the reamer are used for the passage of lubricating fluid and chips.

b. Types. Reamers, as contained within the various aviation shop sets, conform to types, classes and styles as specified in Federal Specification GGGR-180. Reamers have been classified according to construction and/or method of holding. Only a few of the reamers listed in the Federal Specification are used in Arm aviation shop sets. An explanation of reamers found in aviation shop sets follows:

(1) Adjustable, inserted blade, straight fluted (hand), per GGG-R-180, type 111, class 1, grade A. These reamers are fitted with removable cutting blades, which are adjustable for reaming holes of any size within the range for which the reamer was designed. These reamers have straight, round shanks with square ends and contain slots for holding the blades. The reamer assembly is capable of reaming round, straight, and smooth holes. This reamer is shown in figure 4-92.

(2) Jobbers (machine) reamer, perGGG-R180, type XII. These reamers are of grade A high speed steel and have straight flutes and right hand cut, as shown in figure 4-93. The cutting section of these reamers is capable of cutting straight, round holes of specific diameters. These reamers are normally provided as a set.

(3) Brown and Sharpe taper socket (hand), per GGG-R-180, type XIV. These reamers have a fluted type section and straight round shank with squared ends. The cutting section of these reamers is tapered for reaming Brown and Sharpe 1/2 inch per foot standard sockets. The Brown and Sharpe taper is used for tools with B + S taper shanks. It is also used for threaded taper pins. This type is shown in figure 4-94.

(4) Repairman's T-handle (hand) reamer GGGR-180, type XIII. These reamers have straight flutes and a solid handle. The cutting section tapers 1-1/4 inches per foot, as shown in figure 4-95.

c. Selection. As stated in paragraph 4-14, the diameter of a reamer should be greater than the diameter of the hole to be reamed. All reamers, except for adjustable reamers, are marked with their nominal size.

d. Use. The following paragraphs provide procedures for using a typical reamer. Proceed as follows:

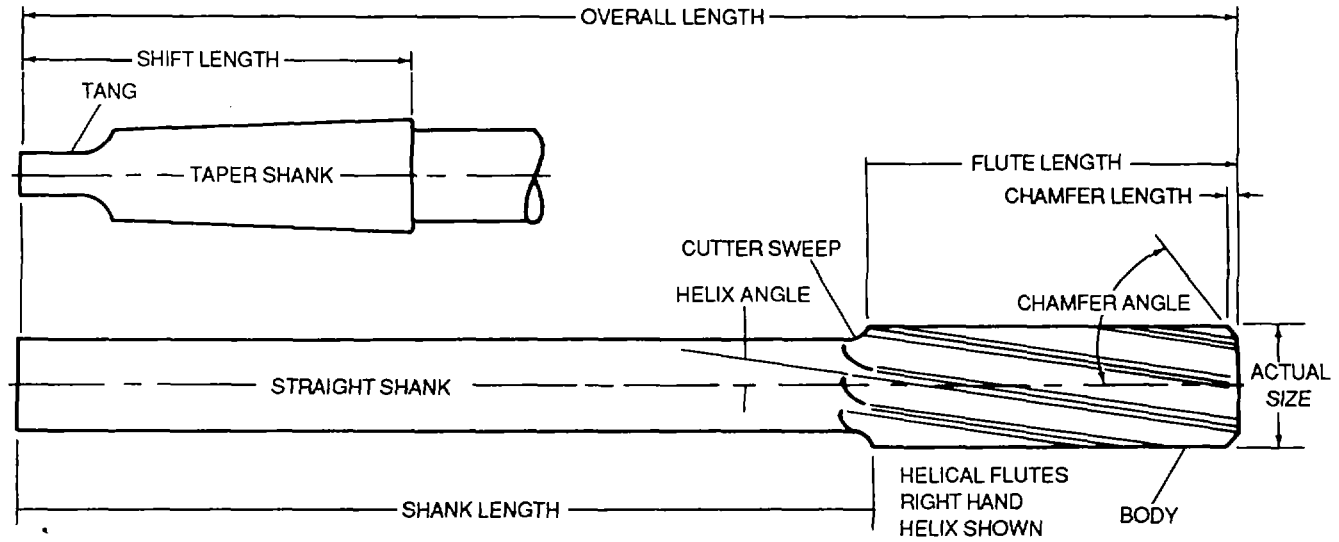

CHUCKING REAMER, STRAIGHT AND TAPER SHANK

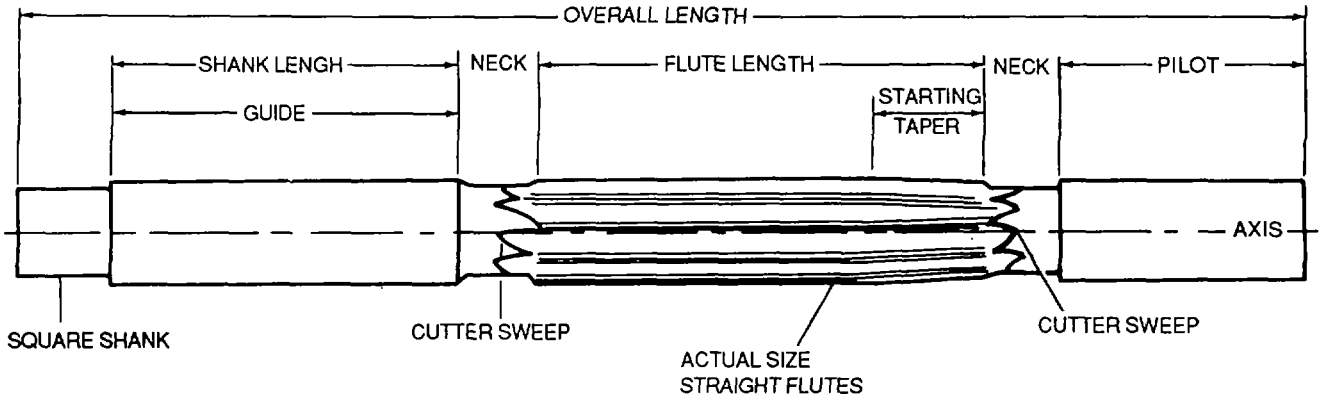

HAND REAMER, PILOT AND GUIDE

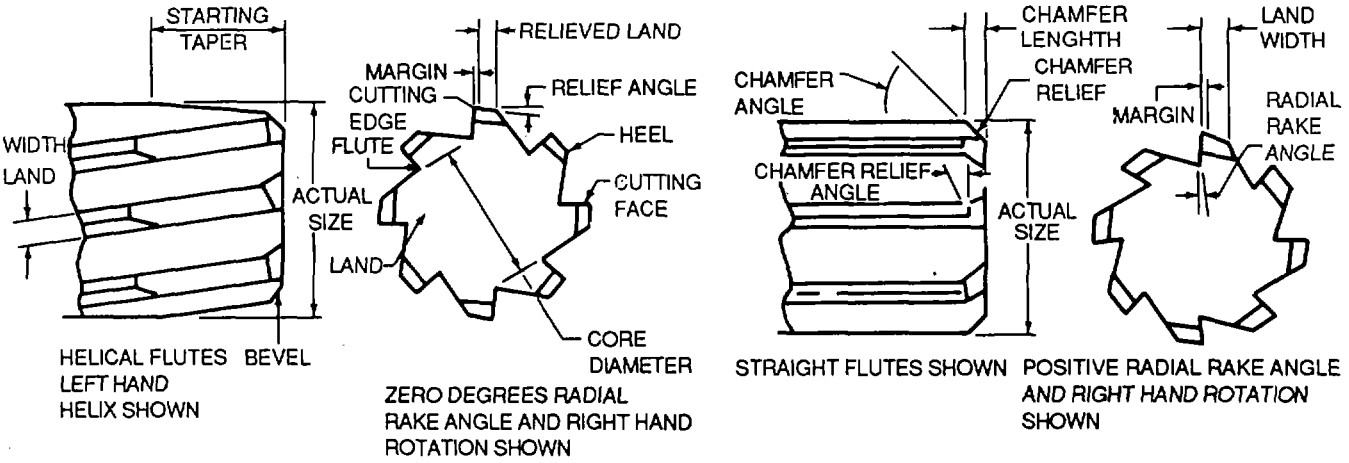

HAND REAMER **MACHINE REAMER**

Figure 4-91. Identification of Parts of Reamers

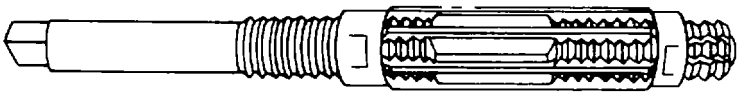

Figure 4-92. Adjustable Reamer

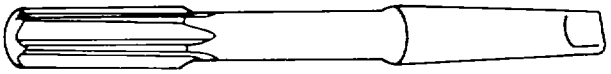

Figure 4-93. Jobber's (Machine) Reamer

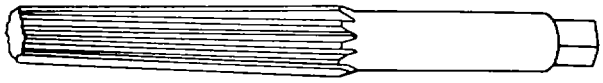

Figure 4-94. Brown and Sharpe Tapered Reamer

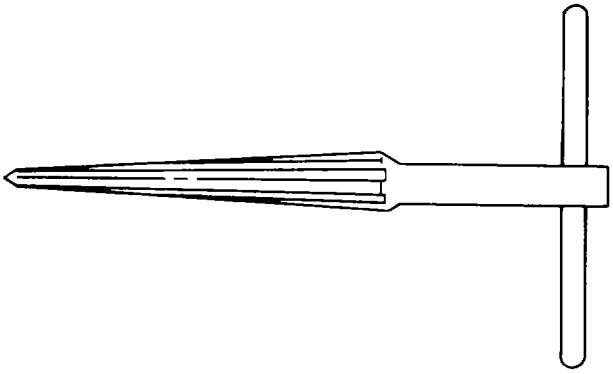

Figure 4-95. Repairman's Hand Reamer

NOTE

* A reamer should enter a hole at right angles to the work surfaces to permit all teeth to simultaneously engage. On a curving surface, the rotating axis of the reamer is presumed to be at right angles to a plane tangent at the point of entrance.

* Where possible, provisions should be made for the reamer to pass through the workpiece. Line reaming is required for concentricity and alignment of holes.

* Work aids, which incorporate bushings to guide the reamers, are needed to produce holes that are in parallel alignment at exact distances from location points. For long holes, it is preferable to guide the reamers at both ends. Work aids are locally fabricated.

* Reamers are operated at slower speeds and higher feed rates than drills of the corresponding diameter. Reamer feed rates will depend upon the type of metal and the size or strength of the reamer.

(1) Secure the work in a vise so that the hole to be reamed is perpendicular to the top of the vise jaws.

(2) Install the reamer shank into a tap wrench and tighten the handle to clamp the reamer in place.

CAUTION

Turn the reamer in the cutting direction (direction of the cutting edges) only. Do not turn reamer backwards at any time. To do so will result in rapid wear and dulling of the cutting edges.

(3) Position the reamer at the top of the hole.

(4) Turn the reamer very slowly in the cutting direction (clockwise) until the reamer is in the center of the hole.

NOTE

* When reaming steel, use cutting oil or machine oil to lubricate the tool.

* When reaming soft iron, do not lubricate the tool.

* Do not turn the reamer too fast or too slowly, because this will cause the reamer to chatter, producing an unevenly reamed hole.

(5) Turn the wrench in the cutting direction with steady, firm pressure until the reamer has been turned in the hole.

CAUTION

Turn the reamer in the cutting direction (direction of the cutting edges) only. Do not turn reamer backwards at any time. To do so will result in rapid wear and dulling of the cutting edges.

(6) Remove the reamer from the hole by continuing to turn the reamer in the cutting direction and raising the reamer at the same time.

e. Repair. Reamers or blades are usually scrapped when the cutting edges become dull and unserviceable.

f. Care. Observe the following practices for the care and upkeep of reamers:

(1) Keep reamers absolutely clean in order to do accurate work.

(2) If proper pressure is applied during use and the reamer chatters, replace it to ensure accurate work.

(3) For short-term storage, wrap the reamer in an oily cloth and store it in a box.

(4) For long-term storage, clean reamer thoroughly and coat with rust-preventive compound. Wrap each reamer separately in oiled cloth and store in a dry, safe place.

4-17. Hacksaws. Hacksaws are used to cut metal that is too heavy for snips or boltcutters.

a. Description. The two parts of the hacksaw are the frame and the blade

(1) Frame. The frame may be solid or adjustable, as shown in figure 4-96. Adjustable frames can be made to hold blades from 8 to 16 inches long, while those with solid frames take only the length blade for which they are made. This length is the distance between the two pins that hold the blade in place. The blade is installed in the frame with the teeth pointing forward, and is tightened by turning the handle or a wing nut.

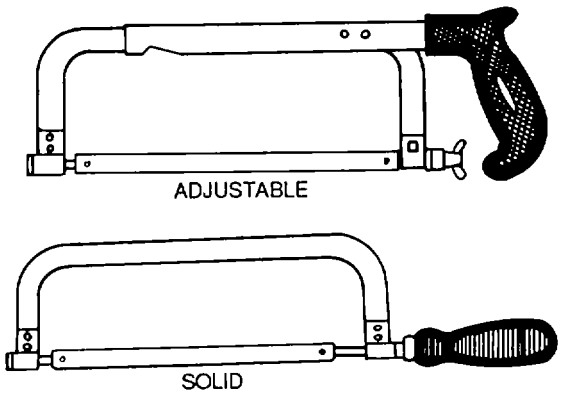

Figure 4-96. Hacksaws

(2) Blades. Hacksaw blades are made of high-grade tool steel. They are about 1/2-inch wide, from 8 to 16-inches long, and have a pitch (number of teeth per inch) of 14,18, 24, or 32.

(a) Temper. Hacksaw blades come in two types: all-hard, and flexible. The all-hard blades are hardened throughout, whereas only the teeth of the flexible blades are hardened.

(b) Set. The set in a saw refers to how frequently the alternating teeth are set in opposite directions from the sides of the blade. The three different kinds of set are alternate set, raker set, and wave set, as shown in figure 4-97.

b. Selection. Select a hacksaw blade based on the thickness and hardness of the stock to be cut.

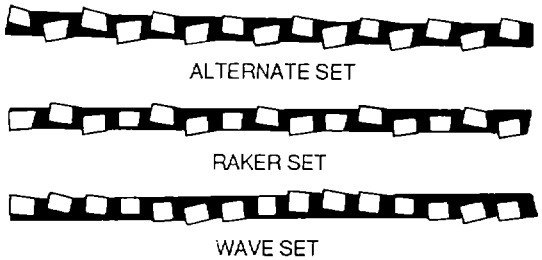

Figure 4-97. Hacksaw Blade Set

(1) Stock thickness. Heavy stock is usually cut with the all-hard blade because it has less tendency to wander. The flexible blade is less likely to break and is used for thin stock.

(2) Stock hardness. Generally speaking, the pitch of the blade depends on the hardness of the stock. Figure 4-98 shows the typical applications for the different saw blade pitches.

NOTE

When cutting any stock, there should always be at least two teeth working on the stock. Therefore, for thin-walled stock, a finer blade than that ordinarily used may be necessary.

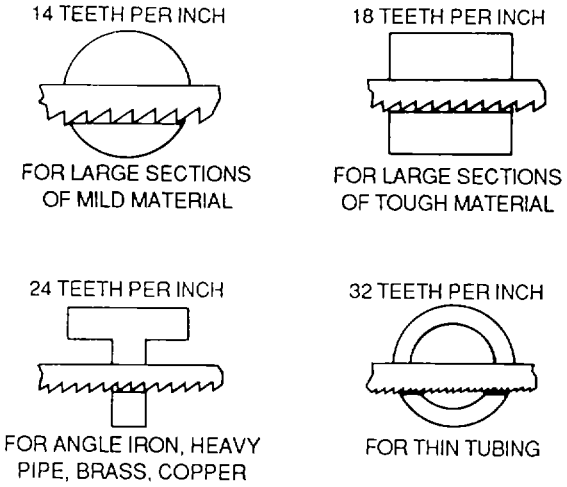

Figure 4-98. Application of Blade Pitch for Certain Materials

c. Use. The following paragraphs provide general procedures for the use of hacksaws:

(1) Install the blade in the hacksaw frame as shown in figure 4-99. Ensure that the teeth point away from the handle. Tighten the wing nut so that the blade is under tension.

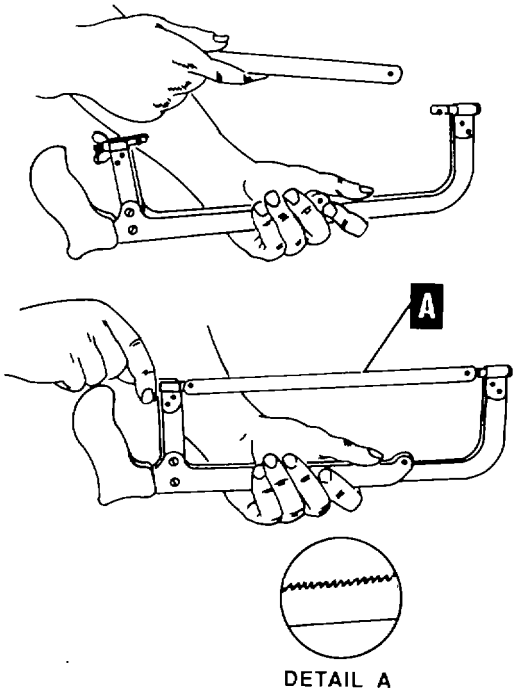

Figure 4-99. Installing a Hacksaw Blade

(2) Place the stock to be cut in a vise. Maintain a minimum of overhang to reduce vibration, give a better cut, and lengthen the life of the blade. Ensure that the layout line on the stock is outside of the vise jaw so that the line is visible during sawing.

(3) Hold the hacksaw as shown in figure 4-100.

(4) When cutting, apply pressure on the forward stroke, which is the cutting stroke. Do not apply pressure on the return stroke. Use long and smooth strokes. Do not exceed 60 strokes per minute.

4-18. Taps and Dies. Taps and dies are made of hard, tempered steel, and are used to cut threads in metal, fiber, or plastic. Four types of threads may be cut with standard taps and dies. These are national coarse, national fine, national extra fine, and national pipe. The following paragraphs describe the types and uses of taps, dies, and accessories.

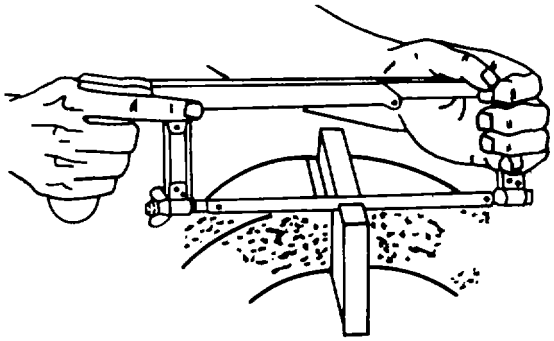

Figure 4-100. Proper Way to Hold a Hacksaw

a. <u>*Taps.*</u> Taps are used for cutting inside or female threads.

(1) Types. The four types of taps are the taper, plug, bottoming, and pipe taps, as shown in figure 4-101.

(a) Taper tap. The taper tap has a chamfer length of 8 to 10 threads. This tap is used to start all threads and to tap through holes.

(b) Plug tap. Plug taps have a chamfer length of 3 to 5 threads and are used when one end of the hole is closed, but a full thread is not required all the way to the bottom of the hole.

(c) Bottoming tap. The bottoming tap is used for cutting a full thread to the bottom of a closed hole.

(d) Pipe tap. Pipe taps are used for pipe fittings, grease fittings, and other places where an extremely tight fit is necessary. The tap diameter tapers at the rate of 3/4 inch per foot.

(2) Use. The following paragraphs outline the procedures for the use of taps:

(a) The hole that is to be tapped must be of the correct size. Figure 4-102 shows a drill and wire gauge index which gives the correct drill sizes for specific sizes and threads of taps.

(b) After the hole is drilled, the tap (held by the tap wrench) is placed in the hole.

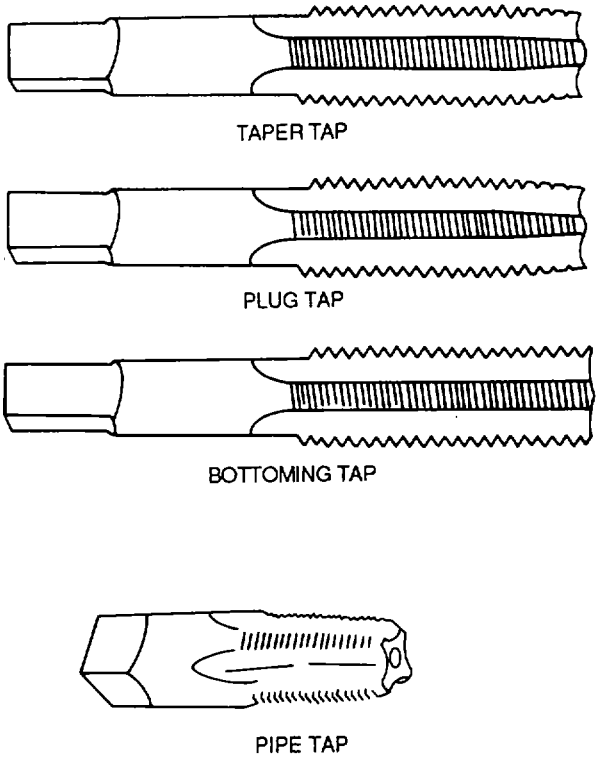

Figure 4-101. Taps

WARNING

Dry-cleaning solvent is flammable and solvent vapors are toxic. Use P-D-680, Type II Solvent in a well-ventilated area. Keep away from open flames. Avoid prolonged solvent contact with skin.

NOTE

* Plug taps or bottoming taps should never be used to start a thread.

* The wrench should be held in the center when starting the tap, and light pressure should be applied for the first two or three turns.

(c) Apply a cutting oil or lubricant from table 4-3 which corresponds to the type of metal being tapped.

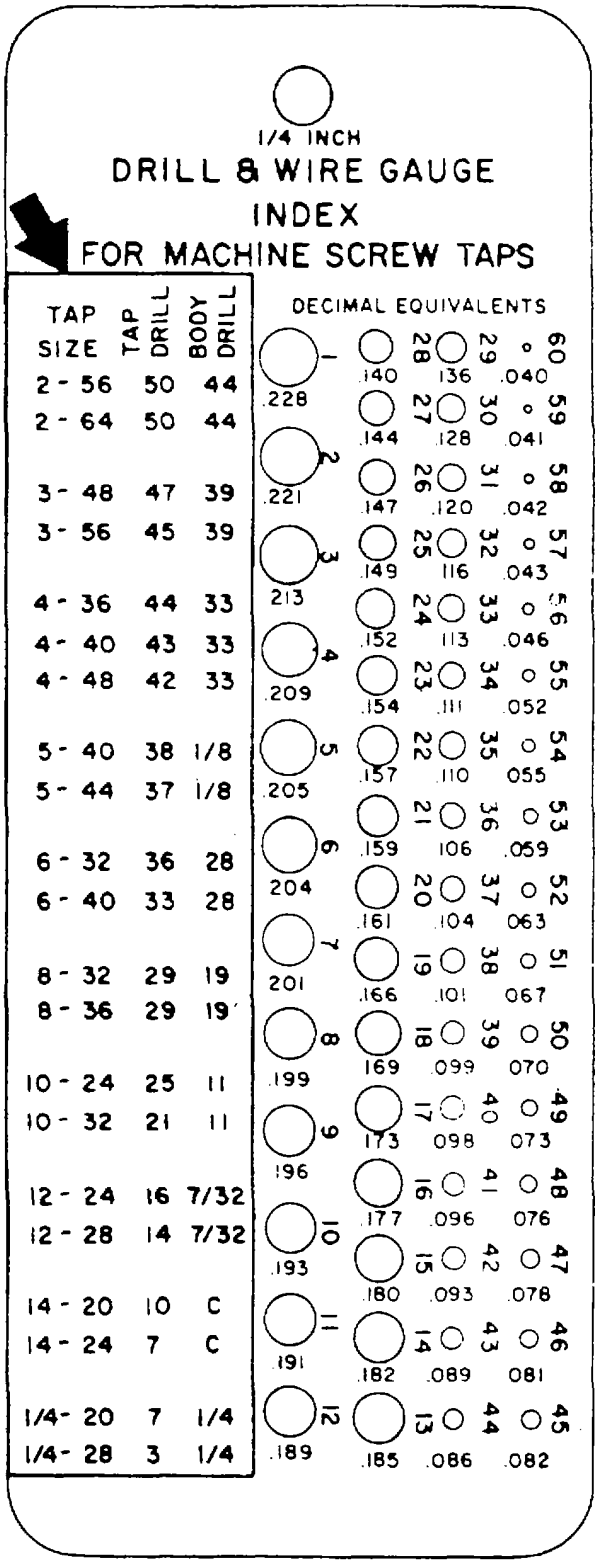

Figure 4-102. Correct Drill Sizes for Tapping

(d) Turn the tap backwards about 1/3 turn for every full revolution forward in order to break off the chip and make cutting easier.

NOTE

After the tap is started, the threads will draw it into the work.

(e) Clean threads with a rag and check threads with a thread gauge before installing screw or bolt.

(3) Removing broken tap. Even when used with care, taps will sometimes break A broken tap may be removed with a pipe wrench when enough of the tap protrudes to allow a grip. When the broken tap does not protrude, it should first be started with a center punch and then completely removed with a tap extractor, as discussed in paragraph 4-20b(2).

(4) Tap wrenches. The two types of tap wrenches commonly used are the straight-handled and the T-handle tap wrench. These are shown in figure 4-103.

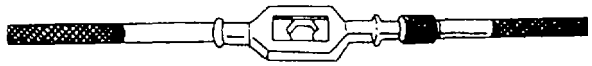

STRAIGHT-HANDLED TAP WRENCH

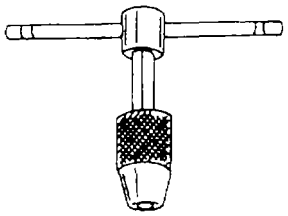

T-HANDLE TAP WRENCH

Figure 4-103. Tap Wrenches

(5) Care. Observe the following practices for the care and upkeep of taps:

(a) Do not attempt to sharpen taps.

(b) Keep cutting edges lightly oiled.

(c) Wipe excess oil and metal shavings from taps and tap wrenches.

(d) Store in a case or wrap individually in cloths to protect cutting surfaces.

b. *Dies*. Dies are used for cutting outside or male threads on a rod, bolt, or pipe.

(1) Types. The three types of dies commonly used in the maintenance of Army aircraft are the solid, adjustable-split, and pipe dies, shown in figure 4-104.

(a) Solid dies. Solid dies, also called rethreading dies, are used mainly for restoring damaged or rusty threads on screws or bolts. They are available in a variety of sizes for rethreading American Standard Coarse and Fine threads. These dies are usually hexagonal in shape and can be turned with a diestock, socket, box-end, open-end, or any other wrench that will fit.

(*b) Adjustable-split dies*. Adjustable-split dies can be used in either diestocks or machine holders. These dies are either the screw adjusting type or the open adjusting type.

1 Screw-adjusting type. The adjustment in the screw-adjusting type is made by a fine-pitch screw which forces the sides of the die apart or allows them to spring together. This adjustment is achieved by turning the adjusting screw clockwise to increase thread diameter, and counterclockwise to decrease the thread diameter.

2 Open adjusting type. The adjustment in the open adjusting type is made by means of three screws in the diestock; one for expanding and two for compressing the dies.

(c) Pipe dies. Two-piece rectangular pipe dies are used to cut American Standard Pipe threads. They are held in ordinary or ratchet diestocks. The jaws of these dies are adjusted by setscrews. An adjustable guide serves to keep the pipe in alignment with the dies.

(2) Uses. Male threads are cut on a piece of stock by the following procedures.

(a) Secure the work firmly in a vise.

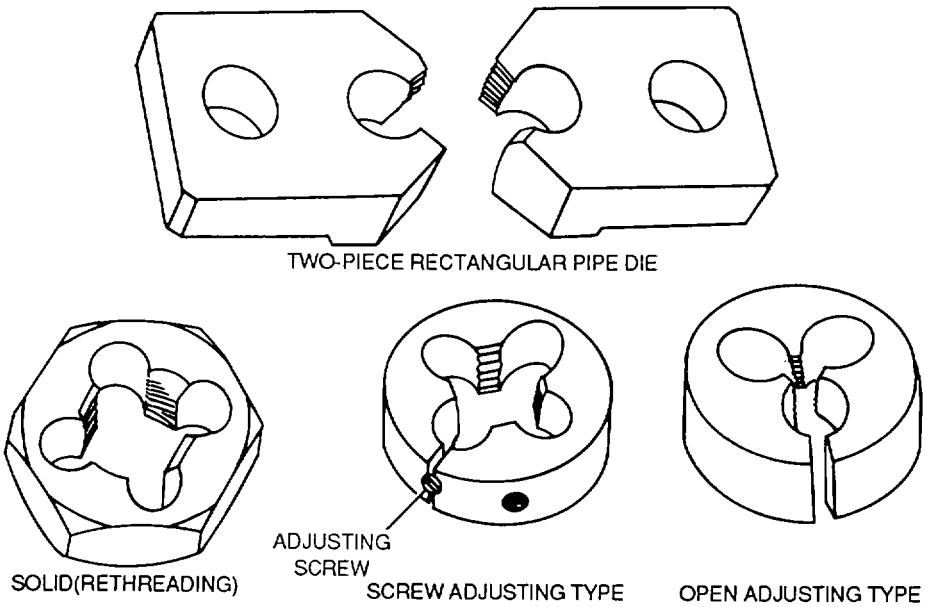

Figure 4-104. Dies

CAUTION

After assembling die to diestock, ensure that the setscrew is tight. The die could fall out of the diestock, causing damage to the die.

(b) Assemble the die to the diestock and tighten the setscrew.

WARNING

Dry-cleaning solvent is flammable and solvent vapors are toxic. Use P-D-680, Type II Solvent in a well-ventilated area. Keep away from open flames. Avoid prolonged solvent contact with skin.

(c) Use a cutting oil from table 4-3 which corresponds to the type of metal being threaded.

CAUTION

Do not attempt to cut a thread with a die which has a major diameter smaller than the diameter of the part to be cut.

(d) Position the diestock over the work and tighten the thumbscrews to secure the diestock to the work.

(e) Rotate the diestock slowly but firmly, until the die takes hold.

(f) Turn the die backwards about 1/4 turn for every full revolution forward in order to break off the chip and make cutting easier.

(g) When the desired length of thread has been cut, slowly back the diestock off the work.

(h) Clean the threads with a clean rag and check with a thread gauge before installing.

(3) Diestocks. Figure 4-105 shows the ordinary and ratchet-type diestocks normally used with dies. The ratchet-type diestocks are usually used with rectangular pipe dies.

(4) Care. Observe the following practices for the care and upkeep of dies:

(a) Do not attempt to sharpen dies.

(b) Keep cutting edges lightly oiled.

(c) Wipe excess oil and metal shavings from dies and diestocks.

Table 4-3. Lubricants for Tapping and Die-Cutting Threads

Table 4-3. Lubricants for Tapping and Die-Cutting Threads

Material	Specification	Type
Mid steel	VV-C-846	Type I
High carbon and alloy steel	VV-C-846	Type II
Hard steel	VV-C-846	Type II
Brass	VV-C-846	Type I
Copper	VV-C-846	Type I
Aluminum	VV-C-846	Type I
Monel	VV-C-846	Type I
Cast iron	VV-C-846	Type I

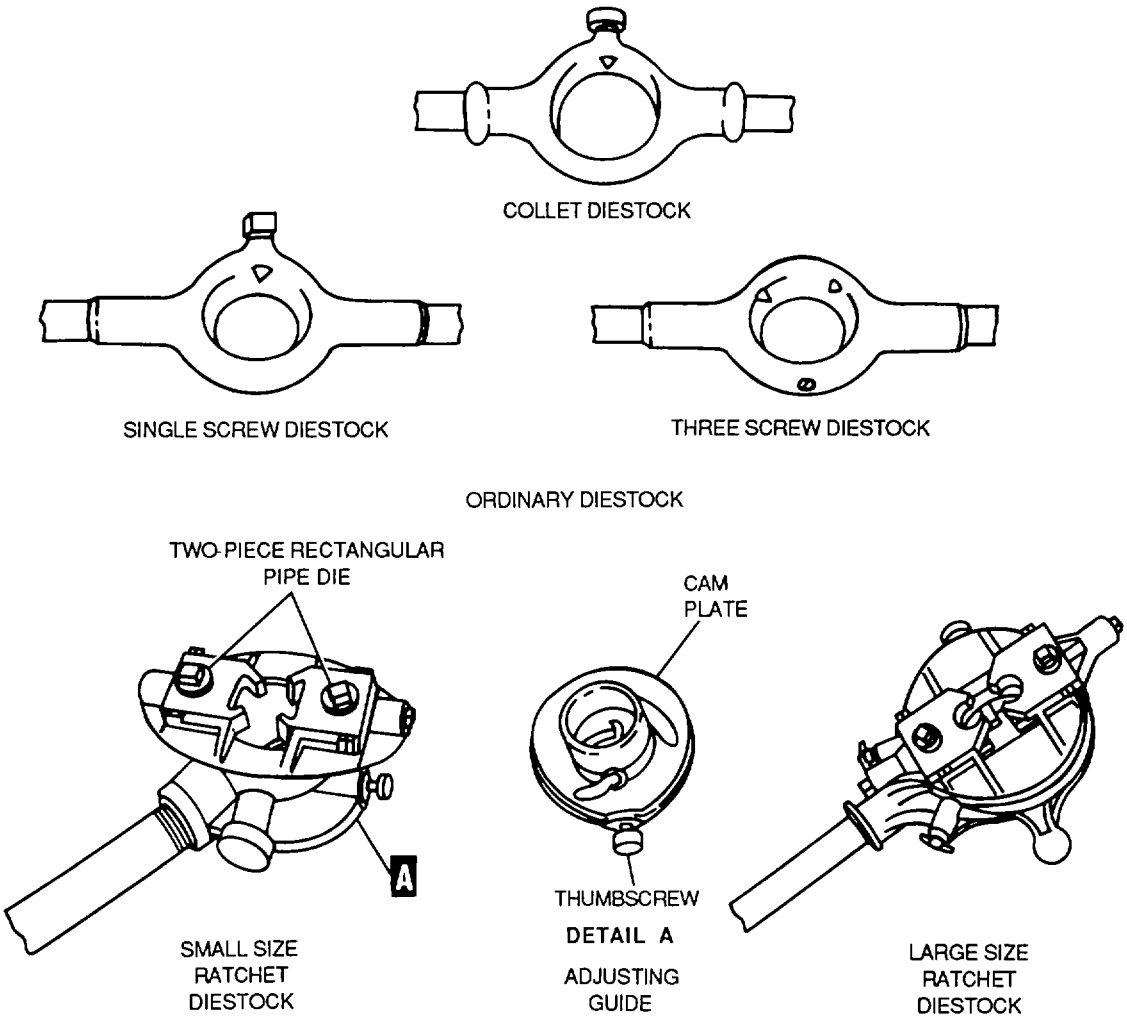

Figure 4-105. Diestocks

(d) Store in a case or wrap dies individually in cloths where they will not come in contact with other tools.

4-19. Thread Chasers. Thread chasers are threading tools that have several teeth and are used to rethread (chase) damaged internal or external threads. These tools are shown in figure 4-106. The internal thread chaser has its cutting teeth located on a side face, while the external thread chaser has its cutting teeth on the end of the shaft. The handle end of the tool shaft tapers to a point.

4-20. Screw and Tap Extractors. Screw and tap extractors are made of hardened steel and are used to remove broken screws and taps without damaging the surrounding metal or the threaded hole.

a. *Description.* The following paragraphs describe these tools.

(1) Screw extractors. Some screw extractors, as shown in figure 4-107, are straight. They have flutes from end to end. These extractors are available in sizes to remove broken screws having 1/4 to 1/2 inch outside diameters. Spiral tapered extractors, shown in figure 4-108, are sized to remove screws and bolts from 3/16 inch to 2 1/8 inches outside diameter.

(2) Tap extractors. Tap extractors, shown in figure 4-109, are sized to remove taps with an outside diameter of 3/16 inch to 2 1/8 inches.

b. *Use* The following paragraphs describe the use of spiral extractors and tap extractors.

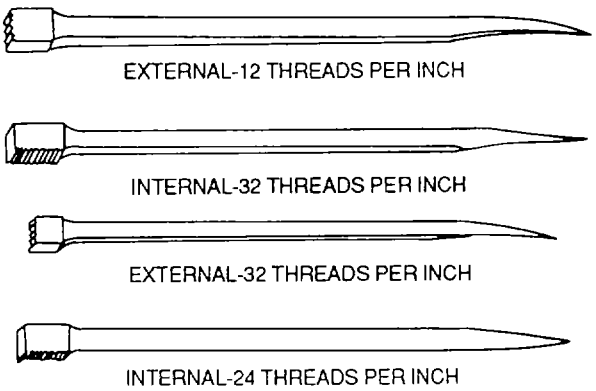

Figure 4-106. Thread Chasers

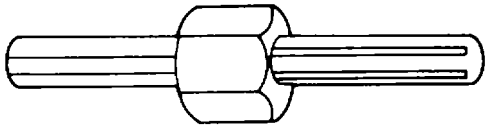

Figure 4-107. Straight Screw Extractor

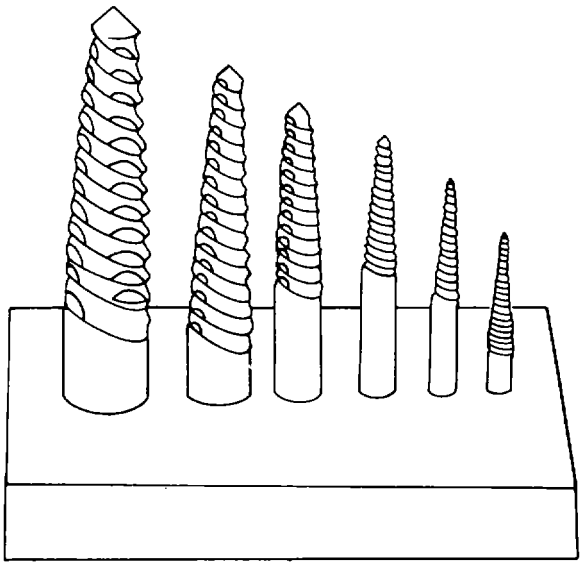

Figure 4-108. Spiral Screw Extractors

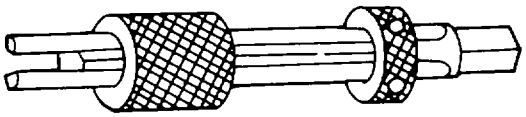

Figure 4-109. Tap Extractor

NOTE

Screws and taps can be removed with the spiral screw extractor.

(1) Spiral extractor. To remove a broken screw or tap with a spiral extractor, proceed as follows:

WARNING

Always wear eye protection when drilling. Failure to comply may result in serious injury to personnel.

(a) Center punch and drill a hole of the proper size in the screw or tap. Use a drill size guide if available. If one is not available, drill the hole slightly smaller than the diameter of the extractor.

NOTE

Some extractors have the required drill size stamped on them.

(b) Insert the extractor into the drilled hole.

(c) Place a tap wrench or an open-end wrench on the extractor.

(d) Remove the broken screw by turning the extractor counterclockwise.

(2) Tap extractor. If a tap has broken off at or slightly below the surface of the work, proceed as follows:

(a) Apply a liberal amount of penetrating oil, Federal Specification VV-P-216, to the broken tap.

(b) Place the tap extractor over the broken tap and lower the upper collar to insert the four sliding prongs down into the four flutes of the tap, as shown in figure 4-110.

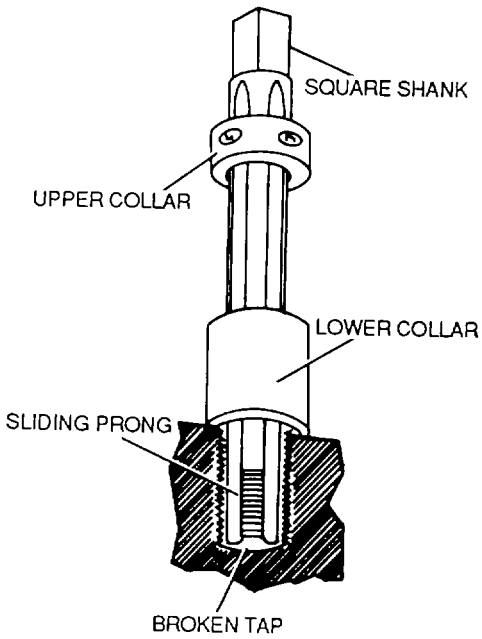

Figure 4-110. Use of Tap Extractor

(c) Slide the bottom collar down to the surface of the work so that it will hold the prongs tightly against the body of the extractor.

(d) Apply a tap wrench to the square shank and tighten.

(e) Loosen the tap by carefully working the extractor back and forth.

NOTE

It may be necessary to remove the extractor and strike a few sharp blows with a small hammer and a pin punch to jar the tap loose. Then reinsert the extractor and carefully try to back the tap out of the hole.

c. *Care.* Observe the following practices for the care and upkeep of screw and tap extractors:

(1) Apply a light coat of oil to prevent rust.

(2) Wipe excess oil and metal shavings from extractors.

(3) Store in the case provided or wrap individually to protect the cutting edges.

4-21. Double Cutting Shears. Double cutting shears have a pointed lower blade which works into a slotted upper jaw and is used for cutting light gauge pipes, stacks, cylinders, and square ducts of sheet metal. Most of these shears are equipped with a crimping attachment on one side for crimping the ends of piping or ducting when fitting several sections together. A small strip is sheared away when a cut is made with these shears. Maintenance for double cutting shears is the same as that prescribed for snips.

WARNING

Cutting and nipping metal items may cause pieces of metal to be thrown. Wear protective eye wear and gloves.

4-22. Nippers and Pincers. Nippers are used to cut protruding metal flush with a surface. They are also used to cut wire, bolts, nails, and light metal bars to specified dimensions. Nippers come in a variety of styles and sizes. Figure 4-111 shows typical tools of this type.

a. *Use*. Nippers and pincers, as previously stated, are used to cut wire, bolts, rivets, nails, and other similar items. Figure 4-112 illustrates the technique for cutting wire, and figure 4-113 shows the procedure for cutting a rivet or similar object flush with the surface.

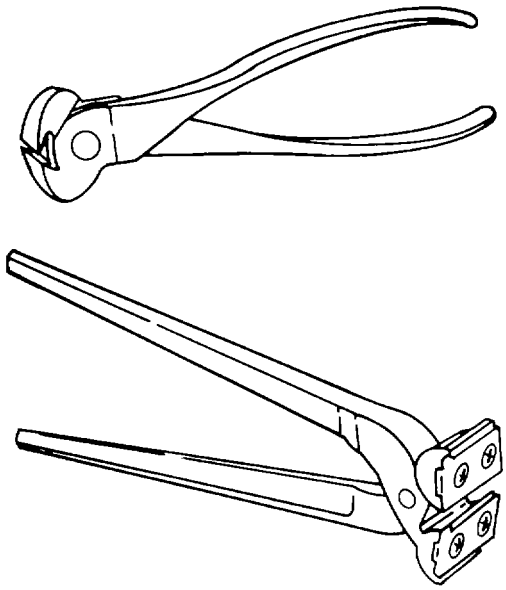

Figure 4-111. Nippers and Pincers

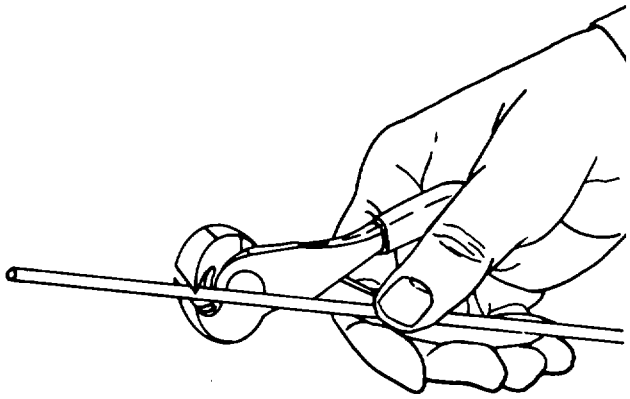

Figure 4-112. Cutting Wire

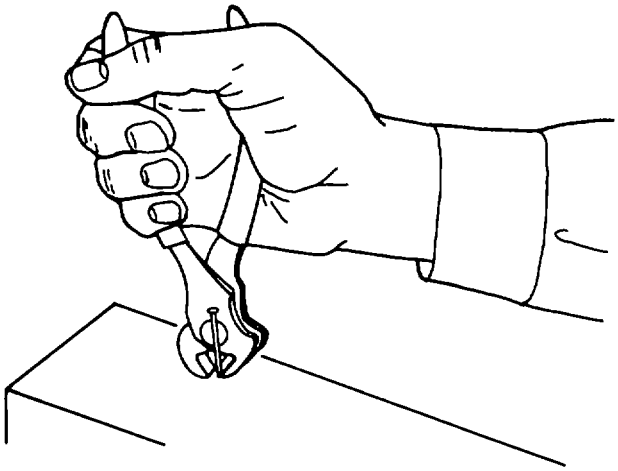

Figure 4-113. Flush Cutting

b. Care. Observe the following practices for the care and upkeep of nippers and pincers.

(1) Keep tools clean at all times. Lubricate the pivot screw or bolt with a drop of light oil.

(2) Apply a thin coat of oil to prevent rust.

(3) Store so that the cutting edges will not come in contact with other tools.

4-23. Pipe and Tube Cutters. Pipe and tube cutters are used to cut pipe or tubing to the length required for fabrication. Pipe and tube cutters are similar in appearance and operation. The essential difference between pipe and tubing is that tubing has considerably thinner walls.

a. Description. Pipe and tube cutters have a cutting wheel and two rollers which are located in a position so that a pipe or tube may be held between them. The rollers may be adjusted toward or away from the cutting wheel by a hand-adjusted screw. This action places pressure against the tube being cut, thereby forcing it against the cutting wheel. Pipe and tube cutters are described in the following paragraphs.

(1) Pipe cutters. Pipe cutters are used to cut pipe made of steel, brass, copper, wrought iron, and lead. The two sizes of pipe cutters generally used in the Army have capacities of 1/8 to 2 inches, and 2 to 4 inches. A typical pipe cutter is shown in figure 4-114.

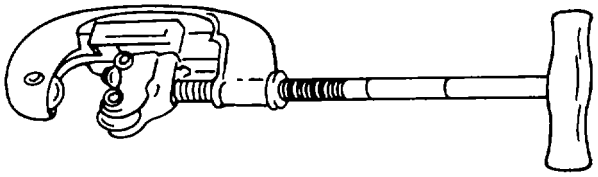

Figure 4-114. Pipe Cutters

(2) Tube Cutters. Tube cutters are used to cut tubing made of iron, steel, brass, copper, and aluminum. They resemble pipe cutters, except that they are of lighter construction. Some tube cutters have built-in portions in the body which are rotated in the tubing after it is cut to eliminate any burrs, shown in figure 4-115.

b. Use. Because the operation of pipe and tube cutters is so similar, and tubing maintenance is most common in the repair of Army aircraft, the following steps will provide procedures for the cutting of tubing. Proceed as follows:

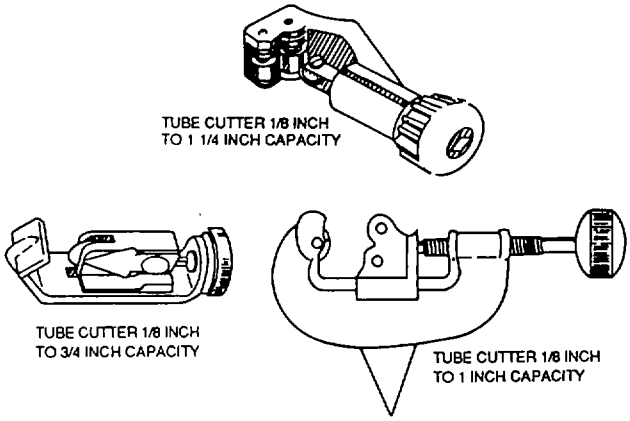

Figure 4-115. Tube Cutters

(1) Make a light line at the point where the tube must be cut and allow for bend radius if required.

(2) Place the tube to be cut into the cutter and tighten the adjusting screw just until the cutting wheels and the rollers touch the tube.

NOTE

The cutting wheel must touch the exact line where the tube is to be cut.

(3) Slightly tighten the adjusting screw and rotate the cutter toward its open side, as shown in figure 4-116.

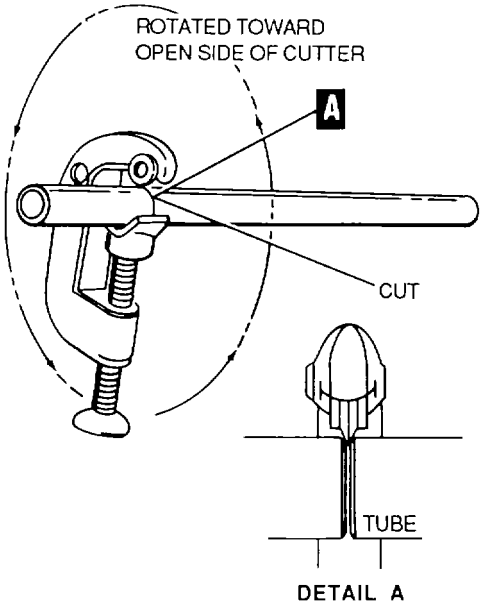

Figure 4-116. Cutting Tube with Tube Cutter

(4) As the tube is being cut, slowly adjust the cutting wheel.

NOTE

Adjust the cutting wheel slowly, and only while the cutter is being rotated, in order to avoid forcing the tube out of round.

(5) After the tube is cut, remove the burr on the inside with the reamer on the back of the tube cutter or with a burnishing tool.

(6) Clean all metal particles from the inside of the tube.

c. Care. Observe the following practices for the care and upkeep of pipe and tube cutters:

(1) Clean and lightly oil the cutter wheel, roller guides, and the adjusting screw.

(2) Store in a rack or a box which protects the cutting wheel.

4-24. Tube Benders. The tube bending tool shown in figure 4-117 is used for bending a tube so that it can be routed as required through an aircraft or a piece of equipment.

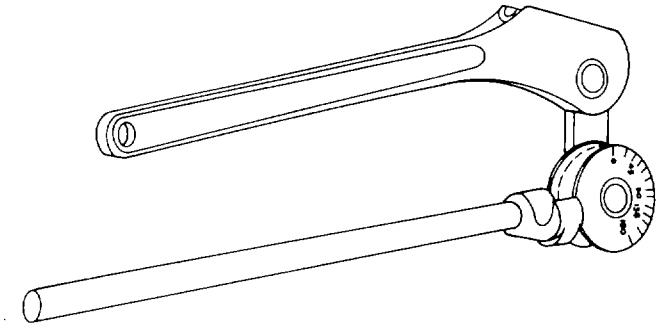

Figure 4-117. Tube Bender

a. *Description*. This type of tube bender usually comes in individual sizes of 3/16, 1/4, 5/16, 3/8, and 7/16 inches. It is marked from 0 to 180 degrees of bend, which permits accurate bending to a specific angle.

b. Use. The following steps provide procedures for bending tubing (see figure 4-118):

(1) Raise slide bar upward and insert the tubing to be bent.

(2) Raise the locking clip and lock the tubing into place.

(3) Lower the slide bar until it rests on the tubing. The zero mark on the slide bar should match up with the zero mark on the block.

NOTE

If a tube has multiple bends, ensure that each bend is made in the correct direction in relation to the others.

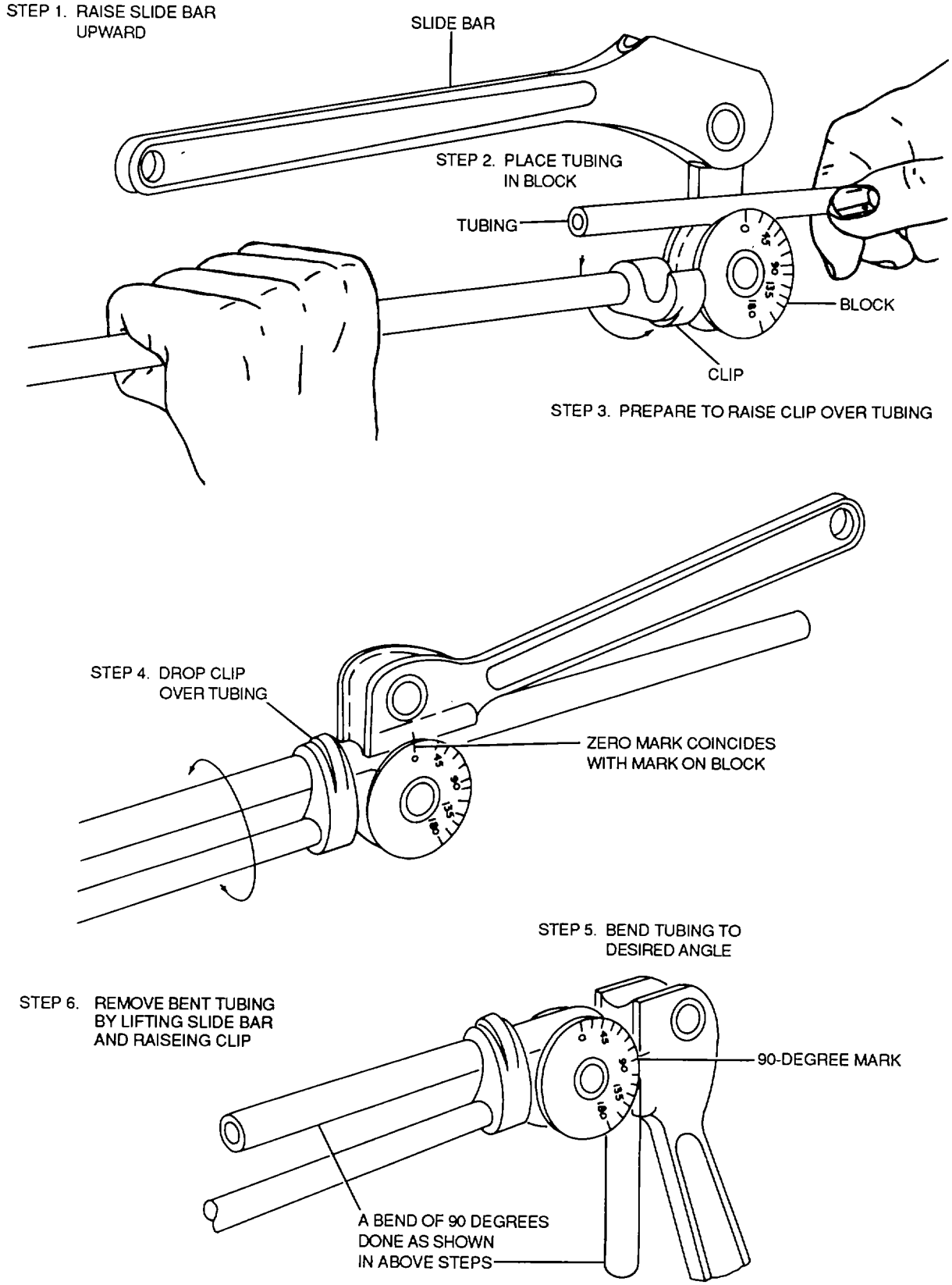

Figure 4-118. Bending Tube

(4) Apply downward pressure on the slide bar.

(5) When the desired angle of bend is reached, as shown on the block, release pressure on the slide bar.

(6) Raise the slide bar, release the locking clip, and remove the tube from the bender.

NOTE

Exercise care when bending stainless steel tubing to avoid damage to the tube bender.

c. *Care.* Observe the following practices for the care and upkeep of tube benders:

(1) Clean all grease and oil from gripping surfaces.

(2) Apply a light coat of oil to all non-gripping surfaces.

4-25. Flaring Tools. Flaring tools are used to flare the ends of tubing to provide a sealing surface. The flare made by these tools measures 37 degrees on each side.

NOTE

Flared tubing and fittings used on aircraft have a 37-degree flare angle. Do not use automotive flare tools, which have a flare angle of 45 degrees. If automotive flare tools are used, the tubing will not seal and system failure will occur.

a. *Types.* The two general types of flaring tools are the single and double. They produce flares as shown in figure 4-119.

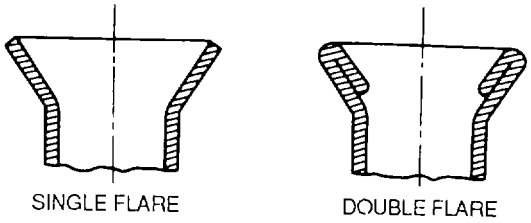

Figure 4-119. Single and Double Flares

(1) *Single-flare tools.* There are two types of flaring tools that produce single flares. They are the combination and the individual flaring tools.

(a) *Combination flaring tool.* The combination flaring tools have a die block with accommodations for tubing from 1/8 to 3/4 inches in diameter. As shown in figure 4-120, the flare cone can be activated by a T-handle, turning a screw, or by a plunger that is tapped by a hammer.

(b) *Individual flaring tool.* The individual flaring tool is made for a specific tube diameter, shown in figure 4-121. This tool uses the sleeve and nut that will remain on the tube when it is installed. The nut secures the tube to the tool. The flare is made by tapping the plunger with a hammer.

(2) *Double-flaring tool.* The double-flaring tool, shown in figure 4-122, has two punches which are tapped by a hammer to produce the flare. Refer to TM 1-1500-204-23-2 for the applications of a double flare.

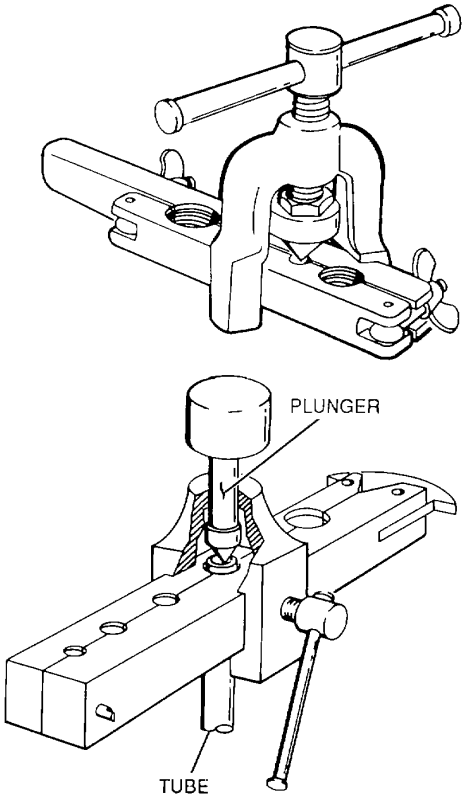

Figure 4-120. Combination Flaring Tools

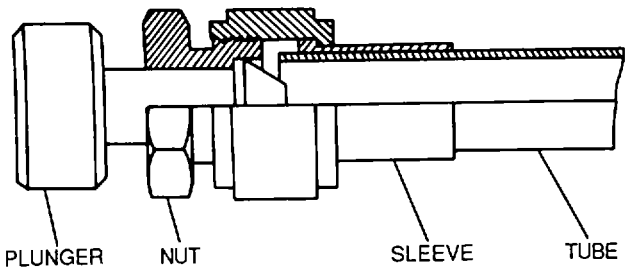

Figure 4-121. Individual Flaring Tool

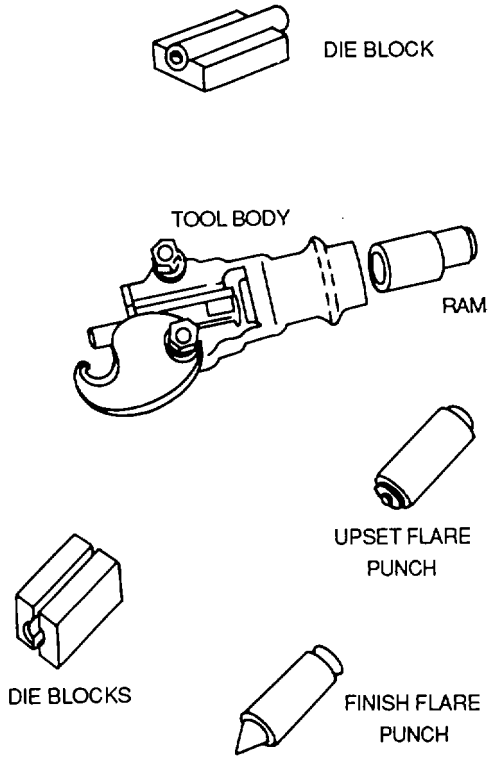

Figure 4-122. Double-Flaring Tool

b. Use. The following paragraphs provide procedures for flaring tubing using the flaring tools described above.

NOTE

Refer to TM 1-1500-204-23-2 for specific flaring procedures and requirements. The following instructions are general in nature and are intended to illustrate the operation of these tools.

(1) Combination flaring tool. To flare a tube using a combination flaring tool, proceed as follows:

(a) Loosen the die block clamp screws and open the die block.

(b) Insert the tubing to be flared into the die block. Allow 1/16 inch to extend above the die block, and tighten the die block clamp screws.

(c) Place flare cone over the end of the tube.

(d) If the flare cone is activated by a screw, tighten it until the end of the tubing is forced into the countersunk hole in the die block. If the tool has a plunger, tap the plunger lightly with a hammer until the metal assumes the shape of the countersunk hole.

NOTE

Rotate the plunger slightly after each hammer blow to ensure a uniform flare.

(e) When the desired flare is reached, remove the flare cone from the tube.

(f) Unscrew the die block clamp and remove the tubing.

(g) Inspect the flare for cracks or breaks. If a crack or a break is detected, the tubing must be cut and reflared.

(2) Individual flaring tool. To flare a tube using an individual flaring tool, proceed as follows:

(a) Place the sleeve (MS20819) into the nut (AN818) and screw the nut onto the tool.

(b) Insert the tube through the sleeve.

(c) Hold the tube and strike the head of the plunger with a hammer.

NOTE

Rotate the plunger slightly after each hammer blow to ensure a uniform flare.

(d) Stop hammering when the flare reaches the desired dimensions.

(3) Double-flaring tool. To form a double flare in a tube, proceed as follows:

(a) Select the proper size die blocks and place one half of the die block into the tool body with the countersunk end towards the ram guide.

(b) Install the sleeve (MS20819) and the nut (AN818) on the tube, and lay the tube in the die block with 1/2 inch extending beyond the countersunk end.

(c) Place the other half of the die block into the tool body and clamp it tightly.

(d) Insert the upset flare punch in the tool body.

(e) Insert the ram and tap lightly with a hammer or mallet until the upset flare punch contacts the die blocks.

(f) Remove the upset flare punch and reinstall in the reverse position. Install the ram and tap lightly until the upset flare punch contacts the die blocks.

(g) Remove the upset flare punch and the ram.

(h) Insert the finishing flare punch and the ram.

(i) Tap the ram slightly until a good seat is formed.

NOTE

Check the flare at intervals during the finishing operation to avoid overseating.

(4) Inspection. Inspect completed flares by pushing sleeve onto flared end. The flare should extend 1/16 inch beyond the end of the sleeve, but the outside diameter of the flare will not be larger than the largest outside diameter of the sleeve.

c. *Care.* Observe the following practices for the care and upkeep of flaring tools:

(1) Keep surfaces clean and lightly oiled.

(2) Close single-flaring tools and tighten the cone into the die block for storage.

(3) Keep double-flaring tools in their cases when not in use.

4-26. Tube Beading Tool. Tube is beaded when it will be joined with flexible hose. The beading provides a sealing surface against which the hose is pressed. Beading may be accomplished on machine beaders, or with the hand-beading tool. The hand-beading tool is the most common beading tool used in the maintenance of Army aircraft. A typical hand-beading tool set is shown in figure 4-123.

a. *Use.* The hand-beading tool is used with tubing having 1/4 to 1 inch outside diameter. The bead is formed by using the beader frame with the proper rollers attached. It is important that the proper rollers are used for a specific size of tubing. The operation of the tube beading tool is shown in figure 4-124. The general procedures are as follows:

(1) Lubricate the inside and the outside of the tube with light oil to reduce the friction between the rollers during beading.

(2) Install the tool on the tube as shown in figure 4-124.

(3) As the tool is rolled around the tube, intermittently screw down the roller until the desired bead dimension is obtained.

NOTE

In some kits, a small vise or tube holder is included to hold the tube steady and ensure an even bead all the way around the tube end.

b. *Care.* Observe the following practices for the care and upkeep of the tube beading tool:

(1) Ensure that the rollers are clean and free of dirt and grit.

(2) Apply a light coat of oil to prevent rust.

(3) Lubricate roller axles with a drop of oil.

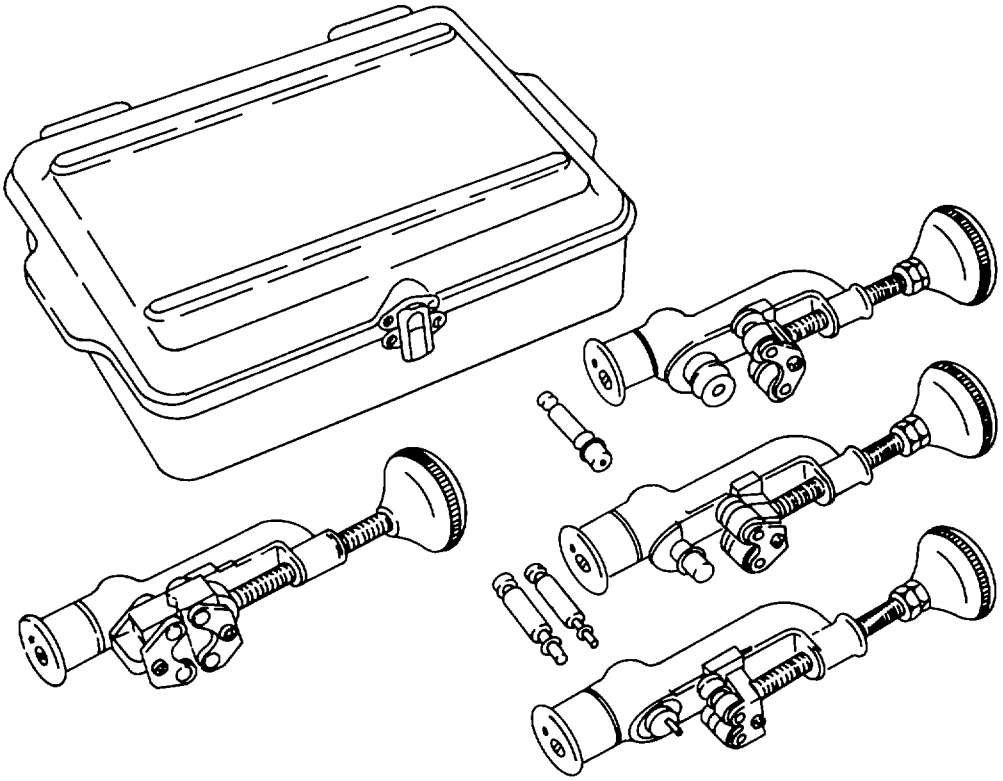

Figure 4-123. Tube Beading Tool

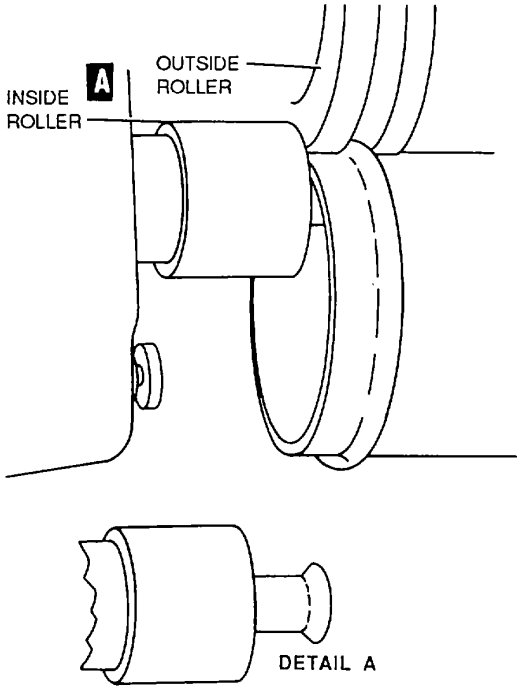

Figure 4-124. Beading Large Tubing

4-27. Hand Seamer and Groover. The hand seamer and groover are sheet-metal working tools, described in the following paragraphs.

a. *Hand Seamer.* The hand seamer is designed to grip metal over a wide area of a proposed seam. The desired height of the fold is adjusted by the use of two thumb screws.

b. *Hand Groover.* The hand groover is used for grooving or creasing sheet metal seams. Sizes range from 3/32 to 5/16 inch in width.

CHAPTER 5

PNEUMATIC TOOLS

5-1. Pneumatic Tools. Pneumatic tools look much the same as electric tools, but they are driven by compressed air. When some sort of air compressor is available in the field, these tools can be used for a vast variety of jobs that otherwise would be impossible to do or would take too long to do by hand.

5-2. Safety Precautions. When operating or maintaining air-driven tools, observe the following precautions to prevent injury to personnel:

a. Inspect the air hose for cracks or other defects. Replace the hose if defects are found.

b. Before connecting an air hose to an air outlet, open the shutoff valve momentarily to expel any condensation.

c. Never point the hose at another person.

d. Stop the flow of air to a pneumatic tool by closing the shutoff valve before connecting, disconnecting, adjusting, or repairing the tool.

e. Always wear eye protection when using pneumatic tools.

5-3. Paint Guns. The use of a paint gun permits a fast and effective means of applying paint.

a. Description. Figure 5-1 shows the basic parts of a typical paint gun. Though the specific locations of some parts may differ from type to type, the guns are generally the same and the parts serve the same purpose.

b. Operation. The spray gun operates on compressed air supplied from a compressor. The flow of paint, is controlled by a needle valve when the trigger on the spray gun is actuated.

c. Use. The correct use of a paint gun involves setting the spray pattern, painting at the correct distance, and using the correct technique in the stroke.

(1) Setting the spray pattern. The spray pattern is variable from round to a vertical, flat, oval pattern, with all patterns in between, as shown in figure 5-2. The vertical fan-shaped pattern gives maximum coverage as the gun is moved back and forth parallel to the surface being painted. The fan is vertical because the wings on the nozzle are horizontal, as shown in figure 5-3. To adjust the spray pattern from circular to fan, proceed as follows (see figure 5-4):

(a) To adjust the spray width, turn the spray width adjustment right for round, and left for fan.

NOTE

As the width of the spray is increased, more material must be allowed to pass through the gun to achieve the same coverage on the increased area.

(b) To increase or decrease the amount of material, turn the material control screw right to decrease flow, and left to increase flow.

(2) Distance for spraying. Depending on the desired width of the spray pattern, the gun is held six to ten inches from the work. If all other adjustments are correct, greater distance will result in dry spray or dusting and excessive overspray. Holding the gun too close to the work will result in coatings which are too heavy and will have a tendency to sag or run.

(3) Stroke technique. The technique of proper stroking requires maintaining the same distance between the gun and the work, the same speed, and keeping the gun as near to a right angle to the surface as possible throughout the entire pass.

(a) Distance. The natural tendency for spray painters, particularly when tired or in an uncomfortable position, is to arc or wave the gun, as shown in figure 5-5. This practice must be avoided at all costs, because it causes a thicker coating to be applied in the middle of a stroke than at the end.

(b) Speed. Maintain a constant speed through the pass. If the motion is slowed at any point and the paint output is not changed, an excessive amount of paint will be deposited, causing it to run or to sag.

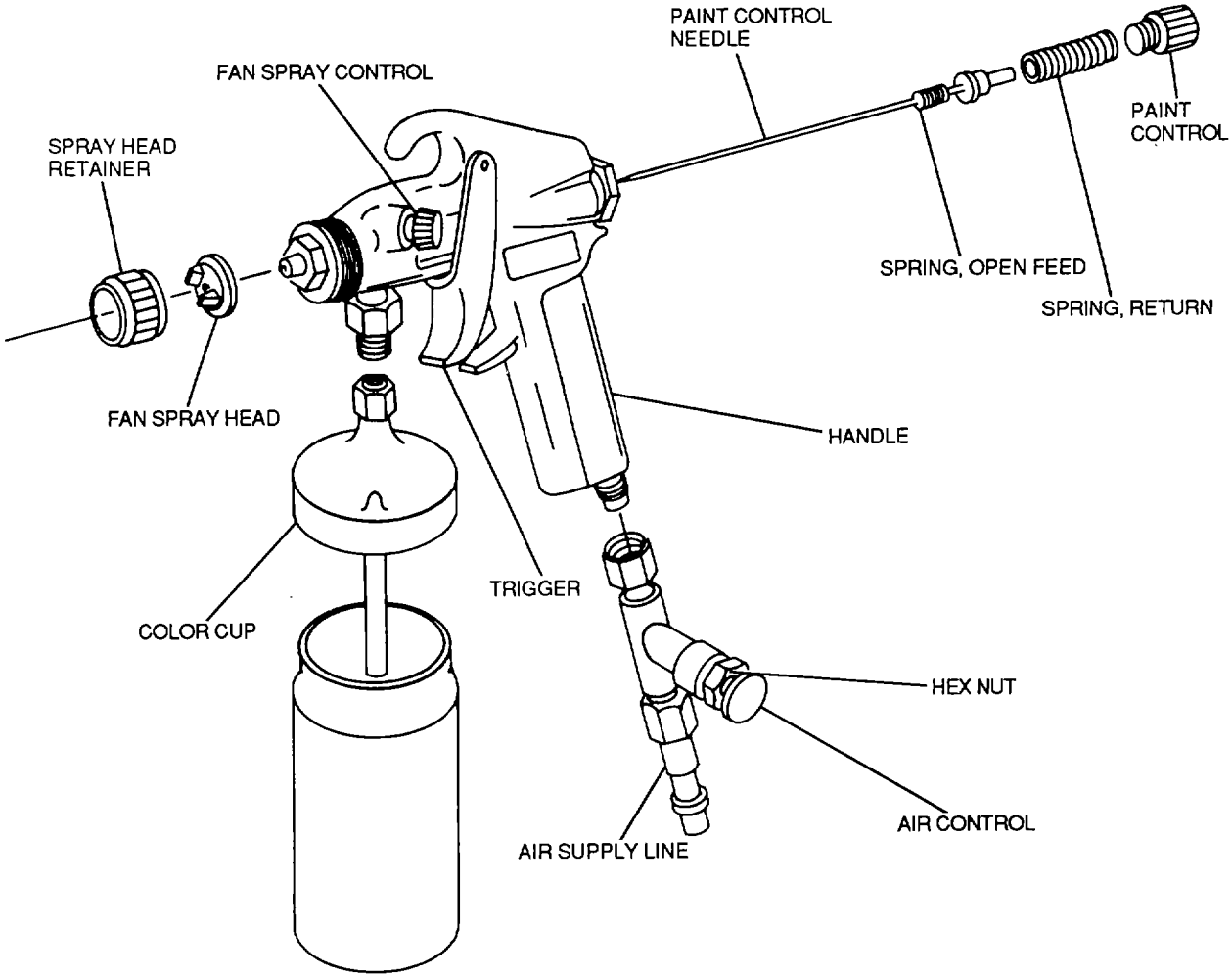

Figure 5-1. Typical Paint Gun

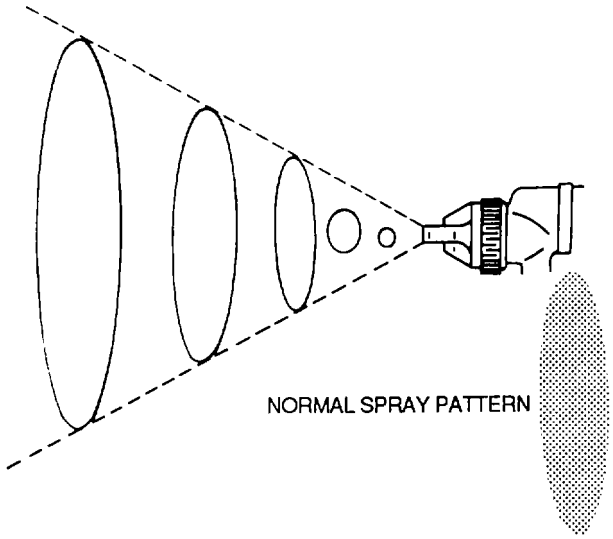

Figure 5-2. Spray Pattern

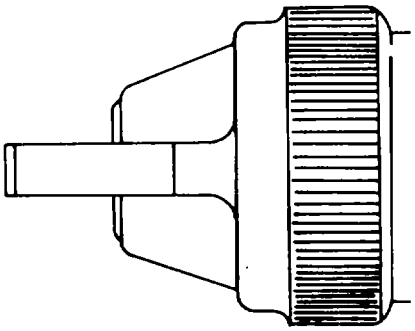

Figure 5-3. Nozzle Position to Produce Vertical Fan

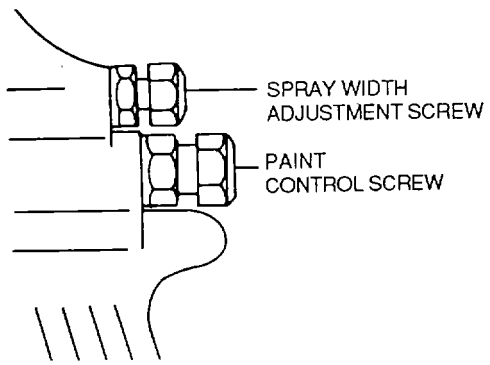

Figure 5-4. Adjustment of Spray Pattern

(c) Angle. The gun should be held at a right angle to the work when possible. Figure 5-6 shows the defects in the finish which can occur if the paint is applied from an angle.

d. Cleaning. A reasonable amount of care will keep paint guns in top condition and prevent a majority of spraying difficulties. The gun should be purged and flushed after the use of each mixed batch to avoid system stoppages and mixing of batches. The following paragraphs describe some general procedures for flushing and cleaning paint guns.

(1) Paint gun with cup. When the paint gun is used with a cup, proceed as follows (see figure 5-7):

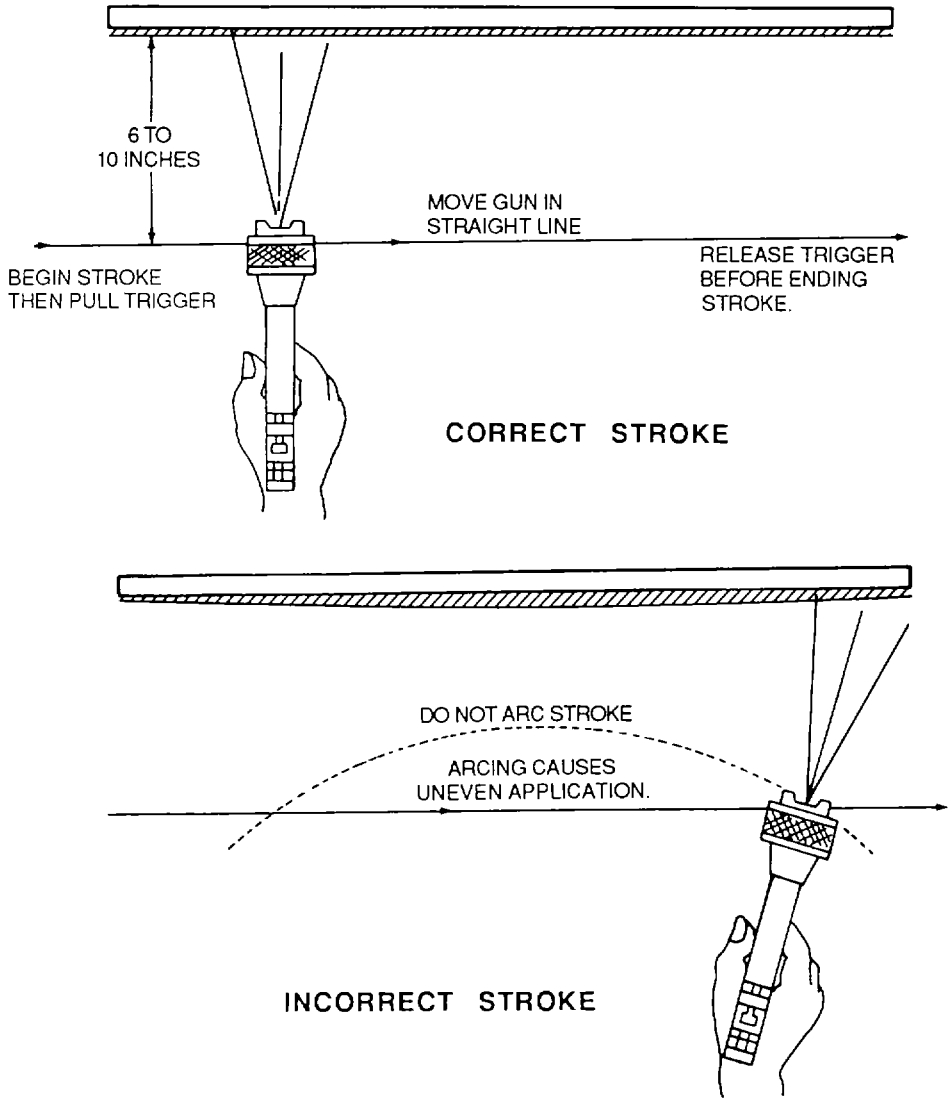

Figure 5-5. Correct and Incorrect Stroke Technique

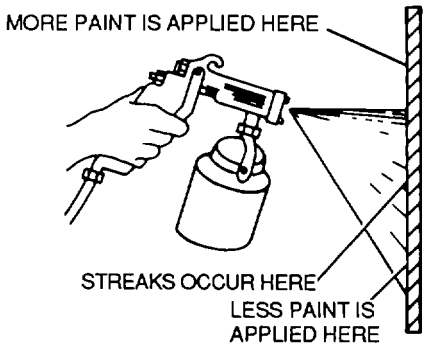

Figure 5-6. Effect of Applying Paint at an Angle

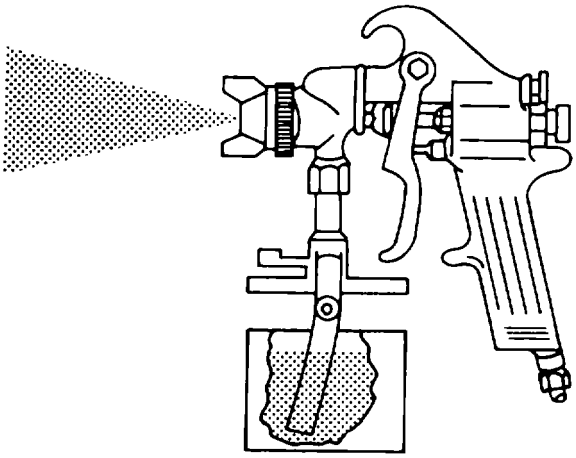

Figure 5-7. Flushing Paint Gun with Thinner or Solvent (Cup)

(a) Place a quantity of thinner or suitable solvent in an open container.

(b) Place the paint gun suction tube into the container of thinner or solvent and operate the paint gun to thoroughly flush the passageway and to clean the tip of the needle.

(2) Paint gun with pressure tank or gravity bucket. When the gun is used with a pressure tank or a gravity bucket, proceed as follows (see figure 5-8):

(a) Remove the hose from the gun.

(b) Turn the gun upside down.

(c) Pour thinner into the fluid opening while pulling the trigger. This will flush all passageways.

(3) Soaking. As shown in figure 5-9, place the nozzle and the fluid connection in thinner. The vessel used should be shallow enough to prevent the thinner from reaching the packing.

NOTE

It is extremely poor practice to place an entire gun in thinner. When this is done, the solvent dissolves the oil in the leather packing and causes the gun to spit.

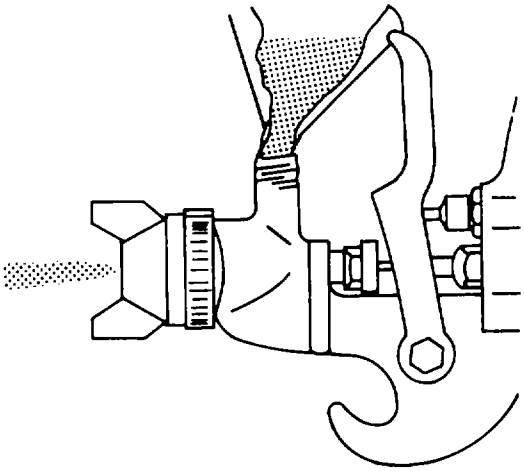

Figure 5-8. Flushing Paint Gun with Thinner or Solvent (Pressure Tank or Gravity Bucket)

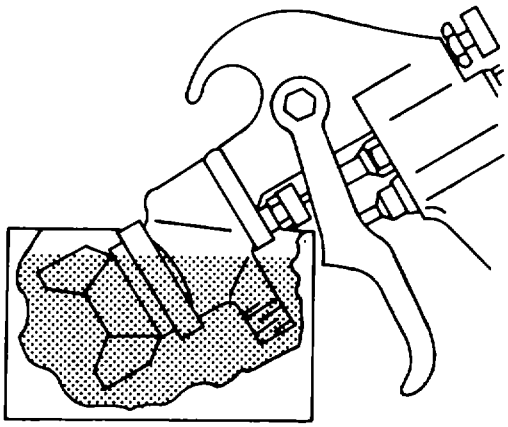

Figure 5-9. Soaking a Paint Gun

e. Pattern Troubleshooting. Figure 5-10 shows common faults associated with spray patterns.

5-4. Oil Spray Guns. Oil spray guns operate on the same principles as paint guns as discussed in paragraph 5-3.

a. Use This type of spray gun employs nozzle fittings long enough to reach out-of-the-way places, and is used to clean aircraft engines and parts or to apply pickling solution to an engine that is to be placed in storage. Atypical oil spray gun is shown in figure 5-11.

WARNING

Drycleaning solvent is flammable and solvent vapors are toxic. Use P-D-680, Type II Solvent in a well-ventilated area. Keep away from open flames. Avoid prolonged solvent contact with skin.

b. Care. To clean oil spray guns, use drycleaning solvent, Federal Specification P-D-680, and follow the procedures outlined in paragraph 5-3d.

5-5. Cleaning Guns. Cleaning guns are used for applying air or solvent under pressure to parts which must be cleaned.

a. Types. There are two main types of cleaning guns: the solvent cleaning gun and the air blow cleaning gun.

(1) Solvent cleaning gun. The solvent cleaning gun, shown in figure 5-12, is used for applying a spray of solvent to engines and other structures which are cleaned with solvent.

(2) Air blow cleaning gun. The air blow cleaning gun, shown in figure 5-13, is used for applying a direct blast of air to clear away dirt, dust, and metal shavings, or to air dry parts cleaned with solvent.

b. Use. The following paragraphs describe the procedures for using these cleaning guns.

(1) Solvent cleaning gun. The solvent cleaning gun is operated as follows:

(a) Connect an air hose to the air inlet connection.

(b) Insert the pickup tube into a container of the appropriate solvent.

(c) Squeeze the trigger to expel the solvent from the nozzle.

(2) Air blow cleaning gun. The air blow cleaning gun is operated as follows:

(a) Connect an air hose to the air inlet connection.

(b) Point the nozzle at the work.

(c) Press the lever to expel the air.

c. Care. Observe the following practices for the care and upkeep of cleaning guns:

(1) On solvent cleaning guns, ensure that the hose and pickup tube are not clogged or restricted in any way.

(2) Keep the nozzle clear so that the flow of solvent or air is not impeded.

5-6. Pneumatic Vacuum Cleaner. The pneumatic vacuum cleaner, shown in figure 5-14, is used to clean up metal shavings which result from drilling and filing jobs on aircraft and in shops. The attachments give the vacuum cleaner versatility. These attachments include a round brush, a crevice tool, a fan-shaped end, and tube extensions of varying lengths. The bag should be emptied regularly and replaced as necessary.

5-7. Pneumatic Drill. Pneumatic drills are used where sparks from an electric drill might become a fire hazard.

a. Types. Pneumatic drills that are available are straight, set at 90 degrees, or rotate through 360 degrees, as shown in figure 5-15. These different types allow a part to be drilled in just about any location.

b. Use. The following paragraphs describe the procedures for using pneumatic drills:

PATTERN	CAUSE	CORRECTION
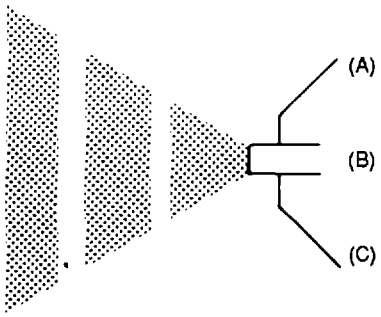	(A) DRIED OUT PACKING AROUND NEEDLE VALVE PERMITS AIR TO GET INTO FLUID PASSAGEWAY. (B) DIRT BETWEEN FLUID NOZZLE SEAT AND BODY OR A LOOSELY INSTALLED FLUID NOZZLE. (C) A LOOSE OR DEFECTIVE SWIVEL NUT ON SIPHON CUP OR HOSE.	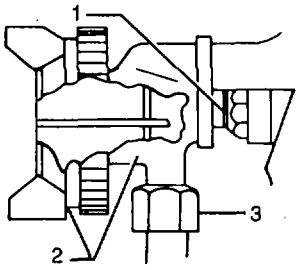 TO CORRECT CAUSE (A), BACK UP KNURLED NUT 1, PLACE TWO DROPS OF MACNINE OIL ON PACKING, REPLACE NUT AND TIGHTEN WITH FINGERS ONLY. IN AGGRAVATED CASES, REPLACE PACKING TO CORRECT CAUSE (B), REMOVE FLUID NOZZLE 2, CLEAN BACK OF NOZZLE SEAT IN GUN BODY USING RAG WET WITH THINNER, REPLACE NOZZLE AND DRAW UP TIGHTLY AGAINST BODY. TO CORRECT CAUSE (C), TIGHTEN OR REPLACE SWIVEL NUT 3.
	A FAN SPRAY PATTERN THAT IS HEAVY IN THE MIDDLE OR A PATTERN THAT HAS AN UNATOMIZED SALT-AND-PEPPER EFFECT INDICATES THAT THE ATOMIZING AIR PRESURE IS NOT SUFFICIENTLY HIGH.	INCREASE PRESSURE FROM AIR SUPPLY.
	DRIED PAINT IN WING PORT A RESTRICTS PASSAGE OF AIR THROUGH IT AND PRODUCES A CRESCENT. FULL PRESSURE OF AIR FROM CLEAN WING PORT FORCES PATTERN IN DIRECTION OF CLOGGED SIDE. 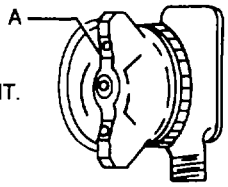	DISOLVE PAINT IN SIDE PORT WITH THINNER, DO NOT POKE IN ANY OF THE OPENINGS WITH METAL INSTRUMENTS.
	SPRAY PATTERN WIDER OR HEAVIER AT EITHER END IS CAUSED BY DRIED PAINT AROUNT THE OUTSIDE OF THE FLUID NOZZLE TIP, B RESTRICTS THE PASSAGE OF ATOMIZING AIR AT ONE POINT THROUGH THE CENTER OPENING OF AIR NOZZLE AND RESULTS IN PATTERN SHOWN. THIS PATTERN CAN ALSO BE CAUSED BY LOOSE AIR NOZZLE. 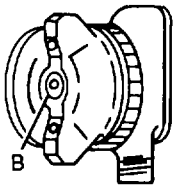	IF DRIED PAINT IS CAUSING THE TROUBLE, REMOVE AIR NOZZLE AND WIPE OF FLUID TIP, USING RAG WET WITH THINNER. TIGHTEN AIR NOZZLE.
	A SPLIT SPRAY OR ONE THAT IS HEAVY ON EACH END OF A FAN PATTERN AND WEAK IN THE MIDDLE IS USUALLY CAUSED BY TOO HIGH AN ATOMIZING AIR PRESSURE, OR BY ATTEMPTING TO GET TOO WIDE A SPRAY WITH THIN MATERIAL.	REDUCING AIR PRESSURE WILL CORRECT THE FIRST CAUSE. TO CORRECT THE SECOND CAUSE, OPEN PAINT CONTROL TO FULL POSITION BY TURNING TO LEFT, AT THE SAME TIME TURN SPRAY WIDTH ADJUSTMENT TO RIGHT. THIS WILL REDUCE WIDTH OF SPRAY BUT WILL CORRECT SPLIT SPRAY PATTERN.

Figure 5-10. Faulty Patterns and Suggested Corrections

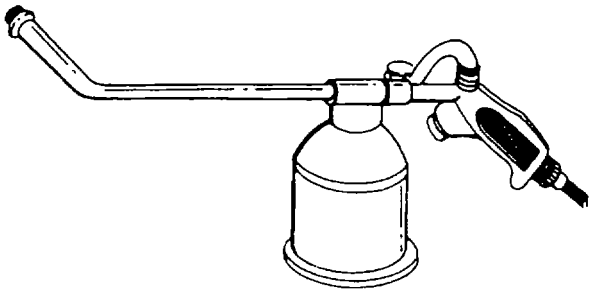

Figure 5-11. Oil Spray Gun

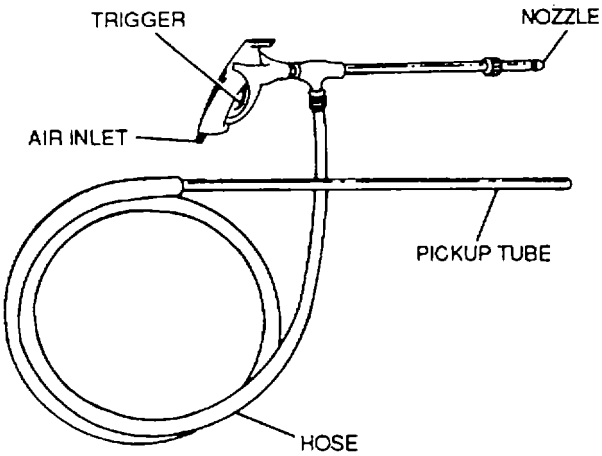

Figure 5-12. Cleaning Solvent Gun

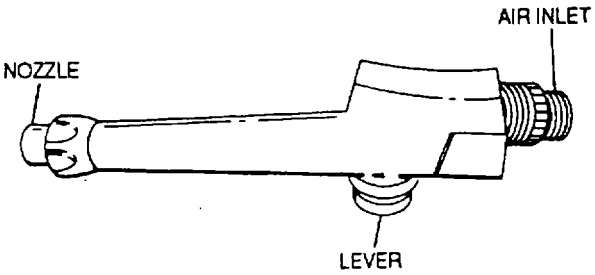

Figure 5-13. Air Blow Cleaning Gun

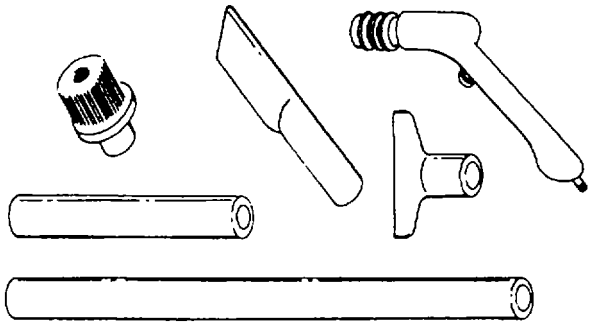

Figure 5-14. Pneumatic Vacuum Cleaner

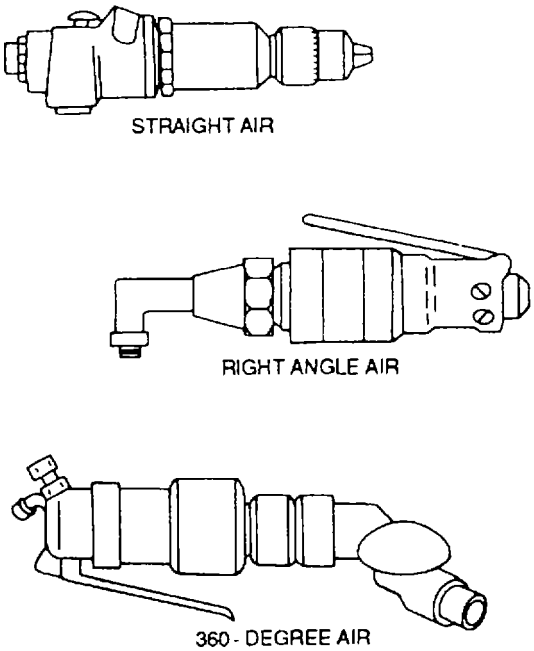

Figure 5-15. Pneumatic Drills

WARNING

- Do not apply further pressure with pliers or wrenches after the chuck is hand-tightened with the chuck key.
- Always remove the key immediately after it is used. Otherwise, the key will fly loose when the drill motor is started and may cause serious injury to personnel.

(1) Insert the drill bit into the drill chuck.

(2) Install an air hose to the air inlet connection.

NOTE

A drill bit that wobbles or is slightly bent should not be used because it will cause enlarged holes.

(3) Test the drill bit for trueness and vibration by running the drill freely.

WARNING

Wear eye protection when drilling. Failure to comply may result in serious injury to personnel.

(4) Always hold the drill at right angles to the work regardless of the position or curvatures. Tilting the drill at any time may cause elongation of the hole.

c. Care. Consult the applicable operator's and service manuals for inspection and maintenance procedures for pneumatic drills.

5-8. Pneumatic Grinder. A pneumatic grinder is used where electrical power is not available or where sparks from an electric motor could be a fire hazard.

a. Types. A typical pneumatic grinder is shown in figure 5-16. The grinders are rated by no-load speeds, which typically result in terms of light-, medium-, and heavy-duty loads being used to describe the grinder. The grinding stones come in numerous shapes and give versatility to the grinder.

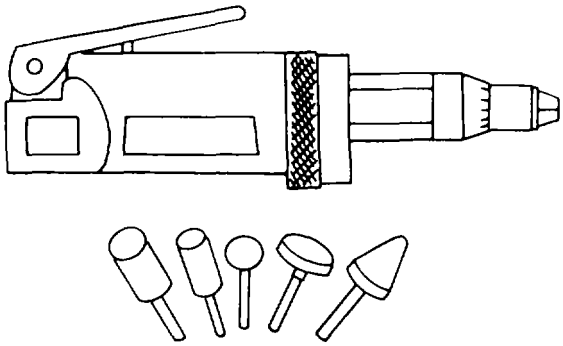

Figure 5-16. Pneumatic Grinder

b. Use. Procedures for using pneumatic grinders are as follows:

(1) Insert the grinding stone into the chuck.

(2) Install an air hose to the air inlet connector.

NOTE

A grinding stone that wobbles or has a bent shaft should not he used.

(3) Test the grinding stone for trueness and vibration by running the grinder freely. Grinding stones which are glazed, out of true or out of round may be reshaped with a dressing stick.

WARNING

Wear eye protection when grinding. Failure to comply may result in serious injury to personnel.

(4) Perform grinding operations by holding the grinder so that the proper edge of the grinding stone is against the work.

c. *Care*. Consult the applicable operator's and service manuals for inspection and maintenance requirements.

5-9. Pneumatic Hammer. The pneumatic hammer, shown in figure 5-17, is used for heavy-duty cutting, shearing, punching, and chiseling and breaking joints. The built-in air regulator varies speed and power. Pneumatic hammers have strokes varying from 1 1/2 to 3 1/2 inches, at 2,000 to 4,500 blows per minute. This hammer uses insertable chisels with different end shapes, such as tapered punch, panel cutter, cut-off, and weld buster.

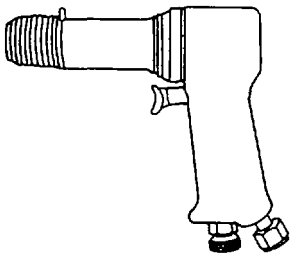

Figure 5-17. Pneumatic Hammer

CHAPTER 6

ELECTRICAL POWER TOOLS

6-1. General. The power tools described within this chapter are of the common types used to accomplish jobs in an efficient manner with less time involved. These tools are usually used in a shop environment, although they can be used in the field with an adequate power supply.

WARNING

Electric drills are not to be used on aircraft due to spark hazard.

6-2. Safety. The following safety precautions will be followed when operating electric power tools:

a. Never operate power tools unless they are completely understood. When in doubt, consult the applicable operator's manual.

b. Inspect all power tools before use to ensure their serviceable condition.

c. Prior to connecting the tool to its power source, ensure that the power switch is in the OFF position.

d. Keep all safety guards in position and wear safety shields or goggles when necessary.

e. Fasten all loose clothing and aprons.

f. Never try to clear jammed machinery before disconnecting the tool from its power source.

g. Before plugging a tool into a power source, ensure that the power source provides the correct voltage
required by the tool.

h. If the power cord has a ground pin as shown in figure 6-1, do not attempt to use it with an adapter. The ground pin serves to decrease the possibility of electric shock.

i. Do not use sparking electric tools in places where flammable gases or liquids or exposed explosives are present. Use pneumatic tools in these areas.

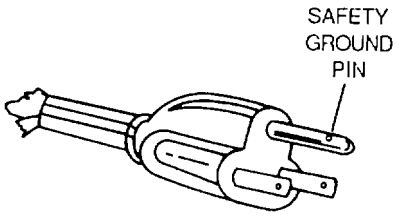

Figure 6-1. Three-Prong Grounded Plug

j. Ensure that power cables are cared for according to the following precautions:

(1) Do not allow power cords to come in contact with sharp objects, oil, grease, chemicals, or hot surfaces.

(2) Replace cords when they are damaged.

(3) Ensure that the power cord is of sufficient length so that it will not be pulled taut to reach the work location.

(4) Position power cords so that they will not be tripping hazards.

6-3. Electric Drills. The electric drill is a hand tool driven by a small, high-speed electric motor. The motor is geared to the chuck through reduction gears. The components of the drill are enclosed in a metal or plastic pistol grip case to permit ease of handling. Although it is specially designed for drilling holes, it can be adapted for different jobs by the addition of various accessories. It can be used for sanding, buffing, polishing, wire brushing, and paint mixing. Typical electric drills are shown in figure 6-2.

a. Sizes. The sizes of electric drills are classified by the largest straight shank drills that they will hold. Therefore, a 1/4 inch drill will hold straight shank drills up to and including 1/4 inch, and a 3/8 inch drill will hold bits up to and including 3/8 inch.

b. Speed. The drill is made to run at speeds which will prevent the motor from burning out. For this reason, large drills run at slower speeds than smaller drills. This is because larger drills are designed to turn larger

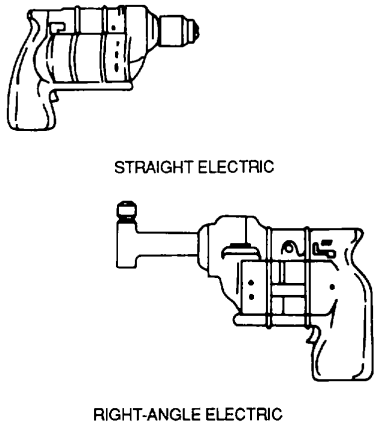

Figure 6-2. Electric Drills

cutting tools or to drill heavy stock, both of which require a slower speed. Therefore, to drill in a metal such as steel, a 3/8 or 1/2 inch drill should be used, whereas for drilling holes in wood or sheet metal, a 1/4 inch drill will be sufficient.

c. Use The operation of an electric drill involves installing the drill bit and operating the drill.

(1) Installing the drill bit. The drill bit is installed in the chuck on the drill. Nearly all electric drills are equipped with a three-jaw chuck, which is tightened and loosened by means of a chuck key, as shown in figure 6-3.

NOTE

- Do not apply further pressure with pliers or wrenches after the chuck is hand-tightened with the chuck key.
- Always remove the key immediately after it is used. Otherwise, the key will fly loose when the drill motor is started and may cause serious injury to personnel.

(2) Operating the drill. Stock is drilled as outlined in paragraph 4-13 of this volume or in TM 11500-204-23-10.

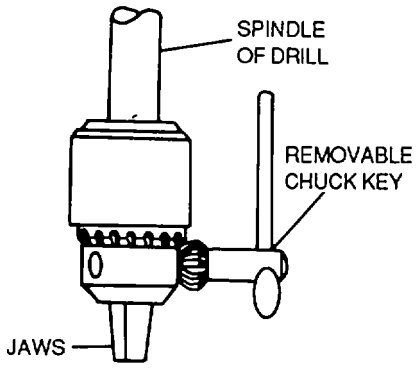

Figure 6-3. Three-Jaw Chuck and Chuck Key

d. Care. Consult the applicable operator's manual for procedures for maintenance and inspection of electric drills.

6-4. Electric Grinders. To keep hand tools in the best usable condition, cutting edges must be sharpened frequently and certain other tools trued or shaped for special purposes. Chisels, punches, drills, snips, screwdrivers, and other hand tools are shaped or sharpened on a grinder. There are two basic types of grinders: a bench type and a pedestal type. These grinders, shown in figure 6-4, consist of an electric motor with a grinding wheel attached to each end of the motor shaft. One wheel is coarse, for rough work; the other is fine and is used for sharpening purposes.

a. Grinding Safety. The grinding wheel is a fragile cutting tool which operates at high speeds. Great emphasis must be given, therefore, to the safe operation of bench and pedestal grinders. The following procedures are mandatory safety precautions for the safety of the operator and the safety of personnel in the nearby vicinity:

(1) Secure all loose clothing and remove rings and other jewelry.

(2) Inspect the grinding wheel, wheel guards, toolrest, and other safety devices to ensure that they are properly installed and in serviceable condition.

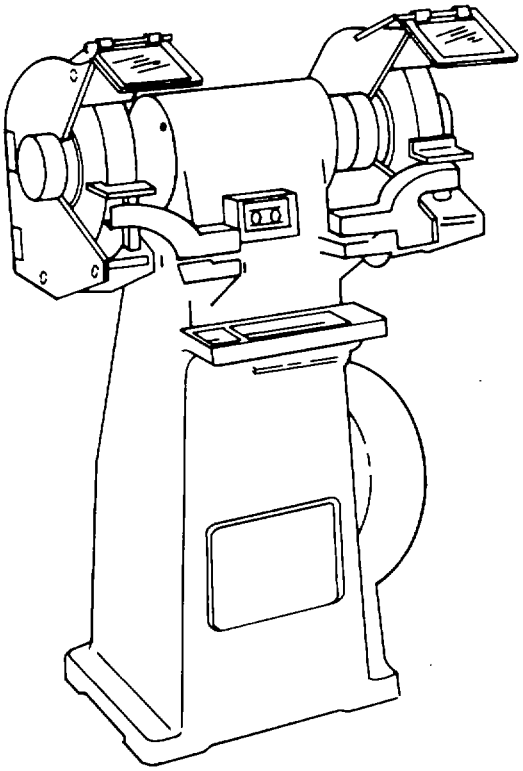

PEDESTAL GRINDER

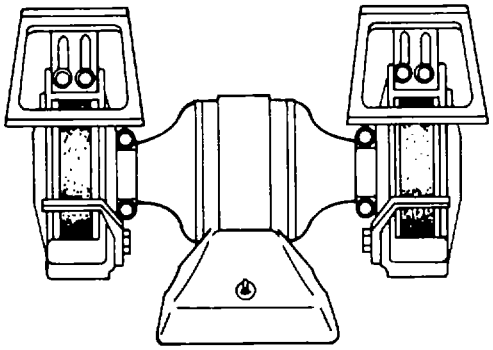

BENCH GRINDER

Figure 6-4. Grinders

NOTE

Do not use a metallic object for testing the soundness of a grinding wheel.

(3) Always wear eye protection when using a grinder.

(4) Stand aside when starting the grinder motor until operating speed is reached. This prevents injury if the wheel explodes from a defect that has not been noticed.

(5) Use light pressure when starting grinding; too much pressure on a cold wheel may cause failure.

(6) Grind only on the face or outer circumference of a grinding wheel unless the wheel is specifically designed for side grinding.

(7) Use a coolant to prevent overheating the work.

(8) Do not hold the work so that the fingers will touch the grinding wheel.

b. Description of Grinding Wheels. A grinding wheel is composed of abrasive grains and a bonding agent, and are graded for coarseness and hardness.

(1) Abrasives. The two types of abrasives are natural and manufactured abrasives.

(a) Natural abrasives. Natural abrasives, such as emery, corundum, and diamond, are used only in honing stones and in special types of grinding wheels.

(b) Manufactured abrasives. The common manufactured abrasives are aluminum oxide and silicon carbide. They have superior qualities and are more economical than natural abrasives.

(2) Coarseness. Generally speaking, fine grain wheels are preferred for grinding hard metals, as they have more cutting edges and will cut faster than coarse grain wheels. Coarse grain wheels are generally preferred for rapid metal removal on softer metals.

(3) Hardness. Hardness of a grinding wheel is a measurement of the ability of the bond to retain the abrasive grains in the wheel. Grinding wheels are said to have a soft to hard grade, which indicate the wheel has a large amount of bond (hard) or a small amount of bond (soft).

c. Types of Grinding Wheels. The selection of grinding wheels for precision grinding can be discussed generally in terms of such factors as the physical properties of the stock to be ground, the amount of stock to be removed (depth of cut), the wheel speed and work speed, and the finish required. Selection of a grinding wheel is determined by considering one or more of these factors. The following paragraphs describe the types of wheels which can be used to grind metals with certain general qualities.

(1) Wheel abrasive type. An aluminum oxide abrasive is most suitable for grinding carbon and alloy steel, high speed steel, cast alloys and malleable iron. A silicon carbide abrasive is most suitable for grinding nonferrous metals, nonmetallic substances, and cemented carbides.

(2) Wheel coarseness. Generally, the softer and more ductile the substance being ground, the coarser the grain selected should be. Also, if a large amount is to be removed, a coarse grain wheel is recommended (except on very hard objects). If a good finish is required, a fine grain wheel should be used.

(3) Wheel hardness. For soft metals, small depth of cut, or high work speed, use a soft grade wheel. If the machine you are using is worn, a harder grade may be necessary to help offset the effects of wear of the machine. Using a coolant also permits the use of a harder grade of wheel.

d. Wheel Installation. The wheel of a grinder must be properly installed. If it is not, the wheel may operate improperly, and an accident may occur. Install a grinder wheel as follows (see figure 6-5):

CAUTION

Do not use a metallic object for testing the soundness of a grinding wheel. The wheel may crack and disintegrate at any time.

(1) Test the wheel for soundness by tapping it lightly with a piece of hard wood. A good wheel gives out a clear, ringing sound when tapped. If the wheel is cracked, a dull thud will be heard.

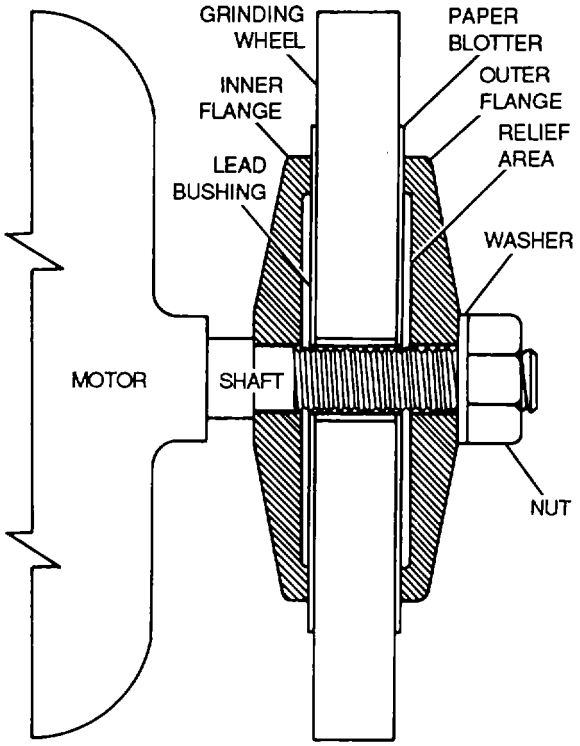

Figure 6-5. Grinding Wheel Installation

(2) Ensure that the shaft and flanges are clean and free of grit and old blotter.

(3) Install the inner flange on the shaft.

NOTE

The blotter thickness for paper must be no thicker than 0.025 inch. A leather or rubber blotter must be no thicker than 0.125 inch.

(4) Place a blotter on the shaft and up against the flange to ensure even pressure on the wheel, and to dampen the vibration between the wheel and the shaft.

CAUTION

Never force the wheel on the shaft. This may cause the wheel to crack, or be out of alignment.

NOTE

A 0.002 to 0.005 inch clearance should be provided. This may be accomplished by scraping or reaming the lead bushing in the center of the wheel.

(5) Mount the wheel on the shaft, and ensure that it fits without play.

(6) Install another blotter and then the outer flange.

(7) Install the washer and the nut.

CAUTION

Do not overtighten the spindle nut. Failure to comply may result in cracking of the grinding wheel.

(8) Tighten the nut sufficiently to hold the wheel firmly.

(9) Operate the grinder for a minute or two in order to test for breakage.

WARNING

- Always wear safety goggles when using grinder. Failure to comply may result in serious bodily injury.
- Ensure that the abrasive wheels are firmly attached to the spindles by the flange nuts. If a wheel should loosen or detach, serious bodily injury could result.
- Ensure that tool rests are firmly in place. A loose tool rest could cause the tool or piece of work to be grabbed by the wheel and cause the hand of the operator to contact the wheel. Serious bodily injury may result.

e. Dressing and Truing. Grinding wheels, like other cutting tools, require frequent reconditioning of cutting surfaces to perform efficiently. Dressing is the term used to describe the process of cleaning the periphery of grinding wheels. This cleaning breaks away dull abrasive grains and smooths the surface so that there are no grooves. Truing is the term used to describe the removal of abrasive from the cutting face of the wheel so that the resultant surface runs absolutely true to some other surface such as the grinding wheel shaft.

(1) Dressing procedure. To dress a wheel, proceed as follows (see figure 6-6):

(a) Start the grinder and let it come up to speed.

(b) Set the wheel dresser on the tool rest as shown in figure 6-6 and bring it in firm contact with the wheel.

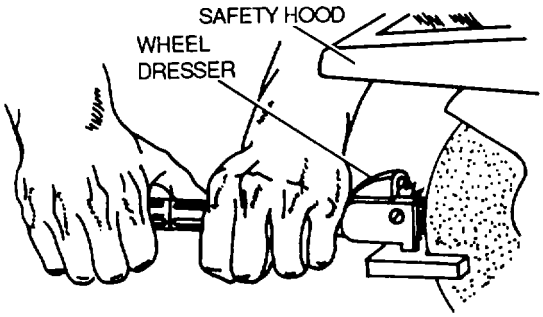

Figure 6-6. Dressing a Grinding Wheel

(c) Move the wheel dresser back and forth across the face of the wheel until the surface is clean and approximately square with the sides of the wheel.

(2) Wheel re-balancing. If grinding wheels get out of balance because of out-of-roundness, dressing the wheel will usually remedy the condition. A grinding wheel can get out of balance by being left sitting with part of the wheel immersed in the coolant; if this happens, the wheel should be removed and dried out by baking. If the wheel gets out of balance axially, it probably will not affect the efficiency of the wheel. This unbalance may be remedied simply by removing the wheel and cleaning the shaft spindle and spindle hole in the wheel and the flanges.

WARNING

Do not attempt to make any adjustment to the tool rest until the grinder is shut down and the power disconnected. Failure to comply may result in serious injury to the operator.

(3) Resetting the tool rest. Each time that a wheel is dressed, check the clearance between the tool rest and the wheel. Reestablish the clearance at 1/16-inch as required.

f. Operation of Electric Grinder. The grinder can be used to dress points on chisels, screwdrivers, and drills. It can be used for removing excess metal from work and smoothing metal surfaces.

(1) Use of other types of wheels. The grinding wheels are removable. The grinders are usually designed so that wire brushes, polishing wheels, or buffing wheels can be substituted for the abrasive wheels.

WARNING

Do not use side of wheel for grinding.

(2) Use of side of wheel. As a rule, it is not good practice to grind work on the side of an abrasive wheel. When an abrasive wheel becomes worn, its cutting efficiency is reduced because of a decrease in surface speed. When a wheel becomes worn in this manner, it should be discarded and a new one installed.

CAUTION

Under no condition shall the wheel, when used in wet grinding, stand partially immersed in water. This will cause the water-soaked portion of the wheel to become heavy and the wheel to become thrown out of balance.

(3) Use of water. Some grinders are equipped with water pumps which pump a steady stream of water over the work. When grinder is not equipped with a water pump, the work should be immersed in water often enough to prevent overheating.

(4) Grinding soft materials. Do not grind soft substances such as aluminum or brass as these materials will clog the pores of the grinding wheel and stop its cutting action. A clogged or glazed wheel should be dressed to obtain proper cutting action.

CHAPTER 7

SPECIAL AIRCRAFT TOOLS

7-1. General. The tools described in this chapter are all used in specific applications on Army aircraft. Some of these tools, such as inspection mirrors, make basic tasks simpler, and others are used for critical maintenance tasks, like the cable tensiometer.

7-2. Protractor. The protractor assembly may be used to measure propeller blade angle, control surface movement, or any other angle.

a. Description. The protractor, shown in figure 7-1, consists of an aluminum frame in which a steel ring and a disk are mounted. Spirit levels are mounted on both the frame and disk. Locks are provided for locking the ring to the frame or the disk. Scales are marked on the disk and the ring. Zeros of the scales provide reference marks between which the angle may be read. Hand adjusting screws are provided so that the ring and the disk may be rotated in relation to the housing and to each other. Functioning parts of the protractor are described in the following paragraphs.

(1) Indicating surface. The indicating surface of the protractor is the bottom edge opposite the upper curved edge.

(2) Primary level. The level at the lower left corner of the protractor is the primary level and is parallel with the indicating surface. This level has two positions: against the face, and at the right angle to the face.

(3) Secondary level. The level at the center of the protractor is a secondary level functioning with the inner and vernier dials.

(4) Lock assembly. The lock assembly detents and engages the inner protractor dial with the vernier scale at zero alignment only.

(5) Ring-to-frame lock. The knob locks, by tension, the other vernier scale at any rotary position in relation to the indicting surface of the protractor.

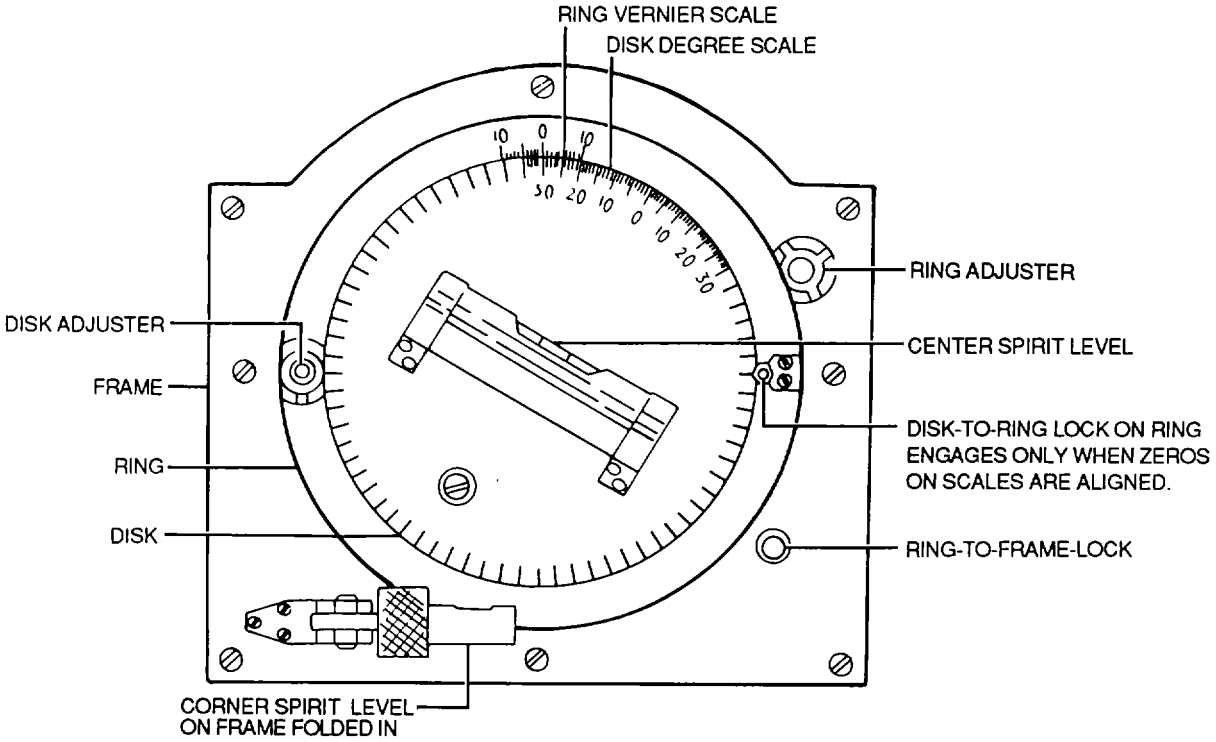

Figure 7-1. Protractor

(6) Ring adjuster. The knob at the upper right side is used for fine rotation adjustment of the vernier scale.

(7) Disk adjuster. The knob at ninety degrees left of the zero on the vernier dial is used for fine rotation of the inner protractor dial.

b. Use. The following steps outline the procedures for measuring the angle of a control surface in an extreme position:

(1) Align the control surface in the neutral position.

(2) Lock the ring to the disk at zero by dropping the lockpin in the deepest slot.

(3) Place the protractor in the approximate middle of the control surface next to a rib.

(4) Using the ring adjusting screw, turn the ring to center the bubble in the level, as shown in figure 7-2.

(5) Lock the ring to the frame with the ring-to-frame lock.

(6) Move the control surface to an extreme limit of movement.

(7) Unlock the disk from the ring with the disk-to-ring lock.

(8) Turn the disk adjusting screw until the bubble is centered in the level, as shown in figure 7-3.

(9) Read the control surface throw in degrees.

NOTE

The angle is read by reading the degrees on the inner dial that correspond to the zero on the vernier scale. The vernier scale indicates tenths of a degree.

c. Care. Observe the following practices for the care and upkeep of protractors:

(1) Protractors are precision measuring instruments. Do not drop or otherwise mistreat protractors, because some damage may render them useless.

(2) Store protractors in protective boxes.

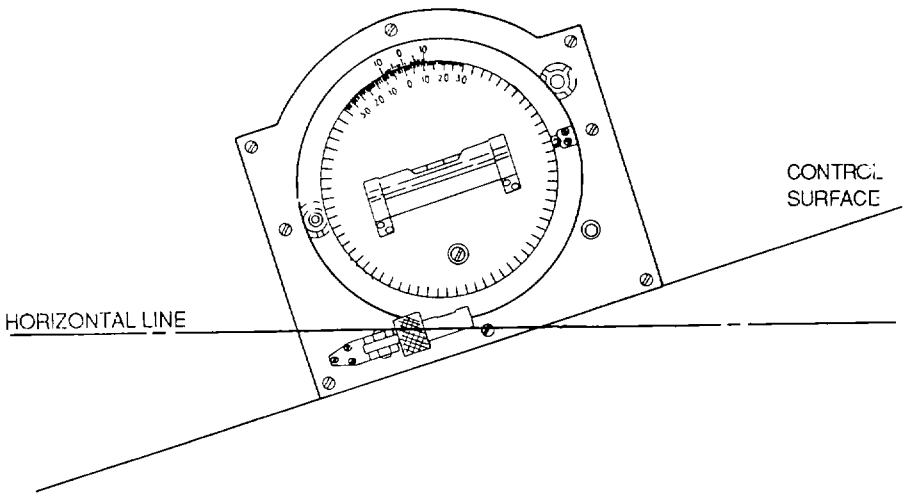

Figure 7-2. Setting Protractor with Flight Control Surface in Neutral Position

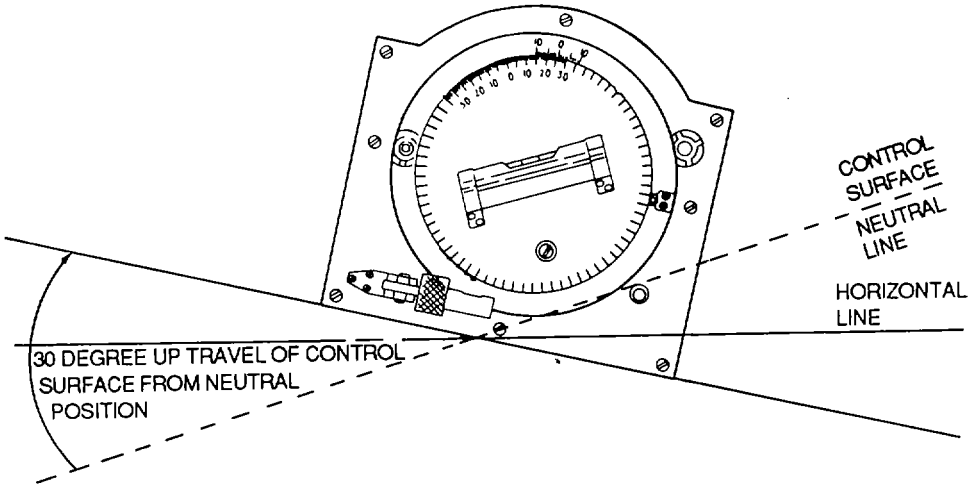

Figure 7-3. Measuring Control Surface Angle at Full Throw

7-3. Cable Tensiometer. Control surface movements must be synchronized with the movements of the cockpit controls. To accomplish this, the flight controls must be rigged. To properly rig control surfaces, a protractor must be used to check the throw of the surfaces, and a cable tensiometer is used to check the tension of the flight control cables. The use of a protractor is discussed in paragraph 7-2. The following paragraphs describe the cable tensiometer and the techniques for its use.

a. Description. Several manufactures make a variety of tensiometers. Each type is designed for different kinds of cable, cable sizes, and cable tensions. A typical tensiometer is shown in figure 7-4. Cable tension is determined by measuring the amount of force needed to make an offset in the cable between two hardened steel blocks, called anvils. A riser or plunger is pressed against the cable to form the offset.

b. Use. The following steps outline the general procedures for measuring cable tension with a tensiometer (see figure 7-5):

(1) With the trigger lowered, place the cable to be tested under the two anvils.

(2) Close the trigger. Movement of the trigger pushes up the riser, which pushes the cable at right angles to the clamping points under the anvils.

(3) Read the force indicated on the dial.

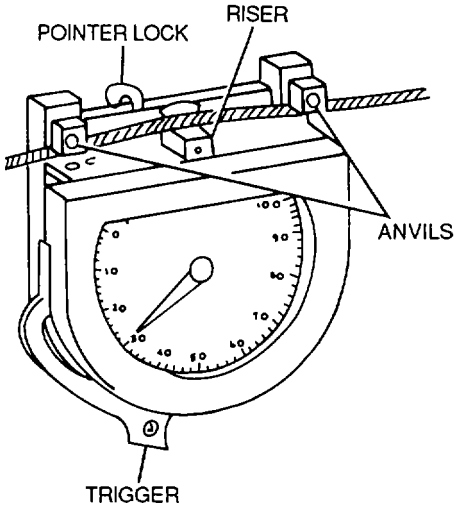

Figure 7-4. Tensiometer

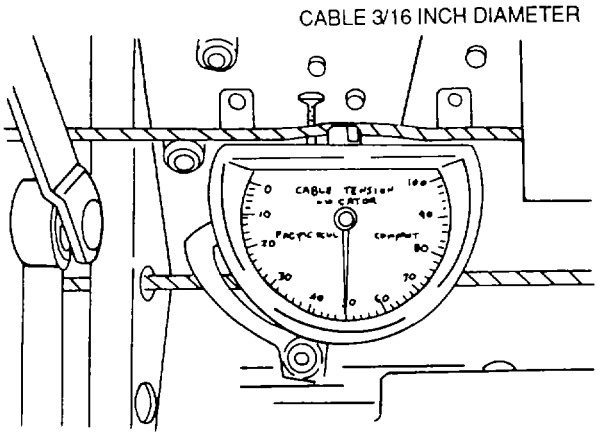

Figure 7-5. Using a Tensiometer

NOTE

- When taking a reading, it may be difficult to see the dial. Therefore a pointer lock is present on the tensiometer. Push it in to lock the pointer. Then remove the tensiometer from the cable and observe the reading. After observing the reading, pull the lock out and the pointer will return to zero.

- Different risers are used with different sizes of cable. Each riser has an identifying number and is identified in the tensiometer kit. Risers are easily inserted into the tensiometer.

c. *Conversion of Tensiometer Reading to Pounds.* Each tensiometer comes with a conversion table which is used to convert the dial reading to pounds. The conversion table is very similar to that shown in figure 7-6. The dial reading is converted to pounds of tension as follows:

NOTE

- The conversion table shown in figure 7-6 is only an example to illustrate the process of conversion. Consult the table included with the tensiometer being used for the correct tension values.

- Note that the risers are specified for use with specific cable diameters. Since this particular tensiometer is not designed for use in measuring 7/32- or 1/4-inch cable, no values are shown in the column for the number 3 riser.

(1) Using a number 2 riser to measure the tension of a 3/16 inch cable, a reading of 48 is obtained.

(2) As shown in figure 7-6, read across to the tension column for a reading of 70 pounds. Therefore, the actual tension of the cable is 70 pounds.

d. *Cable Rigging Tension Charts.* Cable rigging tension charts are graphic tools used to compensate for temperature variations. They are used when establishing cable tensions in flight control systems, landing ear systems, or any other cable-operated systems. A typical chart is shown in figure 7-7. To use the chart, proceed as follows:

TENSION	RISER NO. 1			RISER NO. 2		RISER NO. 3	
	DIAMETER			DIAMETER		DIAMETER	
(POUNDS)	1/16	3/32	1/8	5/32	3/16	7/32	1/4
30	14	17	21	18	26		
40	20	24	28	24	32		
50	25	30	35	29	38		
60	30	35	42	34	43		
70	35	40	48	39	48		
80	39	45	54	43	53		
90	44	50	60	47	58		
100	48	55	65	51	62		

Figure 7-6. Conversion of Tensiometer Reading in Pounds

(1) Determine the size of the cable to be tested and the ambient air temperature. For this example, assume that the cable is 1/8 inch in diameter, that it is a 7 x 19 cable, and the ambient air temperature is 85°F.

(2) Follow the 85° F line upward until it intersects the curve for the 1/8-inch cable.

(3) Extend a horizontal line from this point of intersection to the right edge of the chart. The value at this point indicates the required tension to be established on the cable. The required tension in this example is 70 pounds.

e. Care. Observe the following practices for the care and upkeep of cable tensiometers:

(1) Cable tensiometers are precision measuring instruments. Exercise extreme care when handling them, because some types of damage may render them useless.

(2) Store tensiometers in separate boxes to prevent damage.

7-4. Tumbuckle. Wrench. The tumbuckle wrench shown in figure 7-8 is used for ease in adjusting tumbuckle. It is a short bar curved on each end to fit the body of a turnbuckle. Each curved surface has a short steel peg which fits into the hole in the center of the tumbuckle.

7-5. Valve Stem Fishing Tool. The valve stem fishing tool, shown in figure 7-9, consists of a chain with a cap fastened to one end and a small T-handle fastened to the other end. The cap is threaded to fit a valve stem. When replacing tires on wheels this tool is used in order to prevent the valve stem from slipping inside the tire.

7-6. Valve Repair Tool. The valve repair tool shown in figure 7-10 is used for reconditioning air valves. The tap is used on the inside threads, and the die is used on the outside threads. The end opposite the tap is designed for removing and installing the valve core.

7-7. Cotter Pin Extractor. The cotter pin extractor, shown in figure 7-11, is a steel bar with a curved taper on one end and a curved wedge on the other.

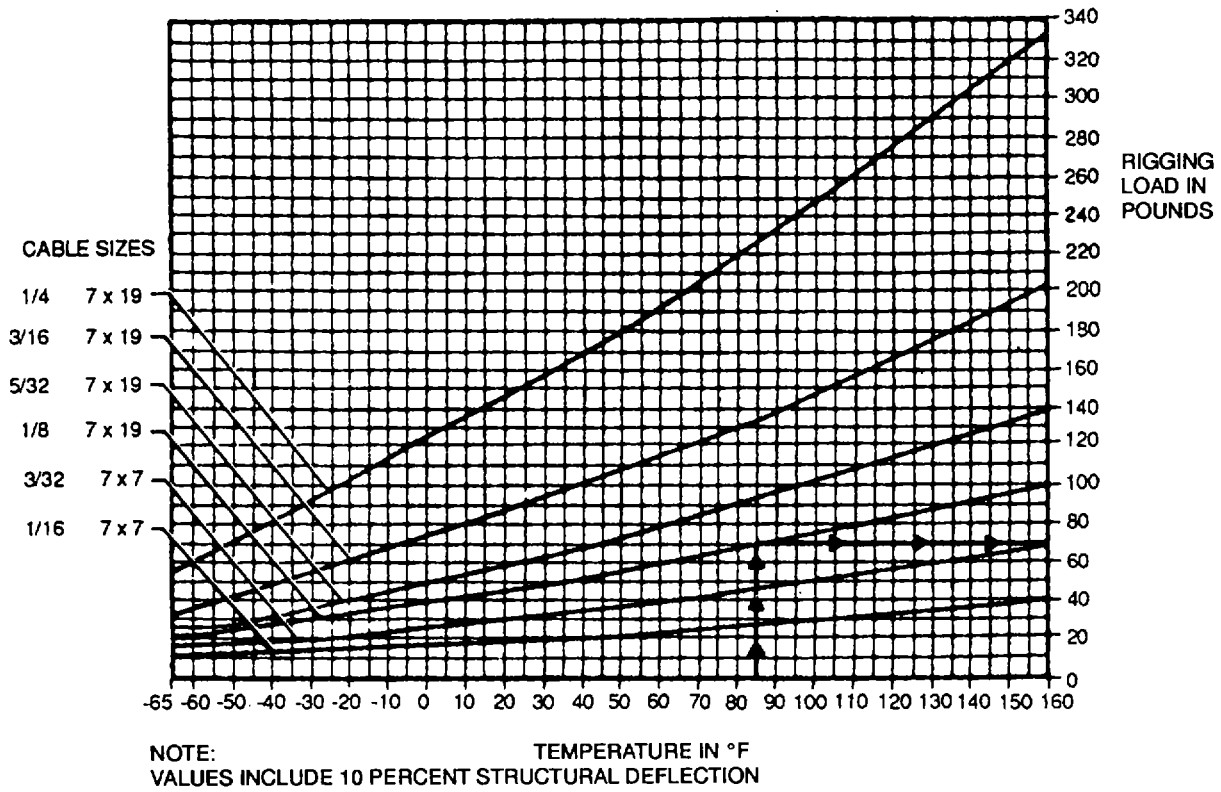

Figure 7-7. Typical Cable Rigging Tension Chart

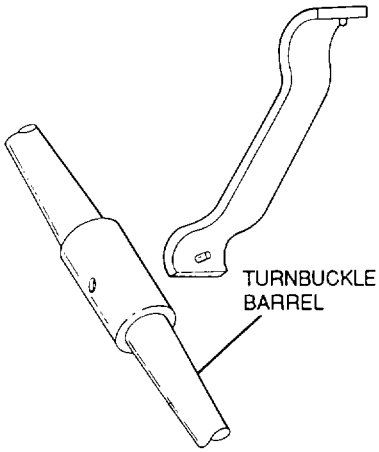

Figure 7-8. Turnbuckle Wrench

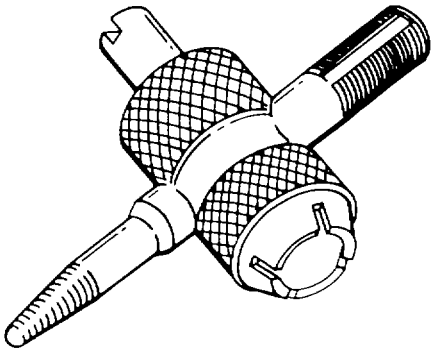

Figure 7-10. Valve Repair Tool

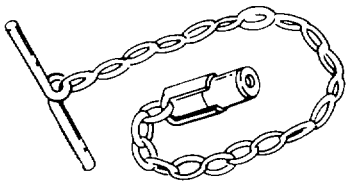

Figure 7-9. Valve Stem Fishing Tool

Figure 7-11. Cotter Pin Extractor

a. Use. A cotter pin can be removed by inserting the point of the taper into the eye of the cotter pin. With the outside of the curved portion bearing on a supporting structure, the cotter pin is removed by prying it out. The curved wedge end may be used to bend or straighten the ends of the cotter pin.

b. Care. If damaged, the wedge or the taper can be repaired by grinding. Observe all safety precautions when performing this repair.

7-8. Mechanical Fingers. Mechanical fingers are used to retrieve small articles which have fallen into places where they cannot be reached by hand. They are also used to start nuts or bolts in difficult areas.

a. *Description.* The mechanical fingers, shown in figure 7-12 and 7-13, is a flexible or fixed cable or tube with long flat springs running thru it. Applying or releasing pressure on the plate operates the mechanical fingers for retrieving hard to reach objects.

CAUTION

Mechanical fingers should not be used as a substitute for wrenches or pliers. The fingers are made of thin sheet metal or spring wire and can be easily damaged by overloading.

b. *Care.* Observe the following precautions for the care and upkeep of mechanical fingers:

(1) Apply a light coat of oil to metal parts to prevent rust.

(2) Store mechanical fingers so that exposed springs are not damaged or binding within the tube.

7-9. Telescoping Magnet. The telescoping magnet shown in figure 7-14 is used to retrieve magnetic objects which have fallen into locations not accessible by hand. It is similar in principle to the mechanical fingers, but instead of the fingers, it has a magnet at the end of a telescoping tube. The tube is simply extended to reach the object, and the object is held by the magnet as it is pulled out.

7-10. Flang Nut Wrench. Flang nut wrenches are used to tighten nuts which secure tubing. The handle-type nut wrench is shown in figure 7-15. When the handle-type wrench shown in figure 7-15 is not available, one may be fabricated by removing a section of a box-end wrench allowing it to slip over the tubing.

NOTE

In an emergency, an open-end wrench may be used on brass or steel nuts, but it is likely to round off corners and distort the shape of an aluminum nut.

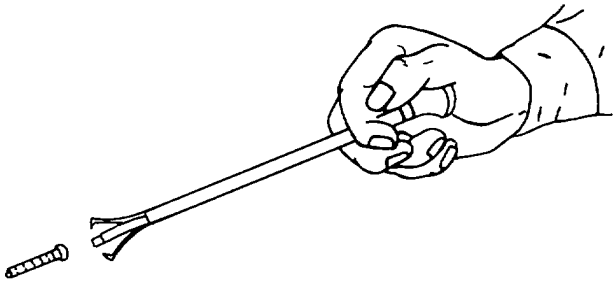

Figure 7-12. Mechanical Fingers

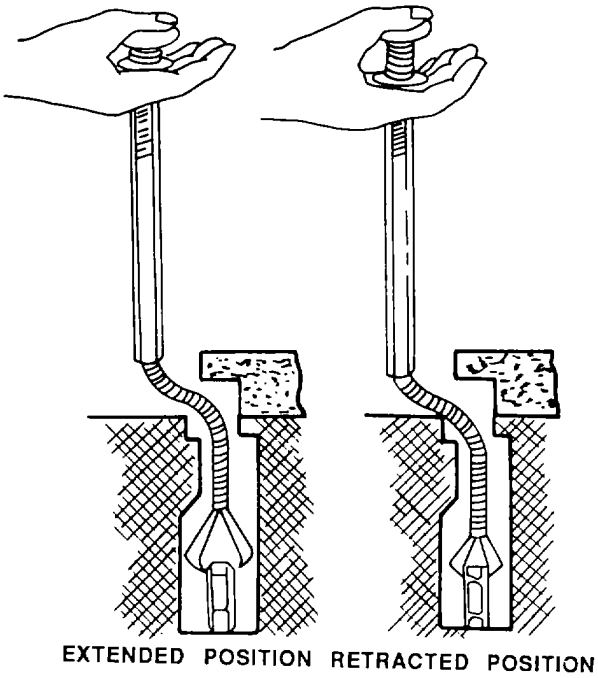

Figure 7-13. Flexible Mechanical Fingers

7-11. Lockwire Pliers. Lockwire pliers, shown in figure 7-16, are pliers which hold, twist, and cut. They are designed to reduce the time used in twisting lockwire.

a. Operation. To apply lockwire with these pliers, proceed as follows:

CAUTION

During twisting operation keep the wire tight without over stressing it or allowing it to become nicked, or otherwise mutilated.

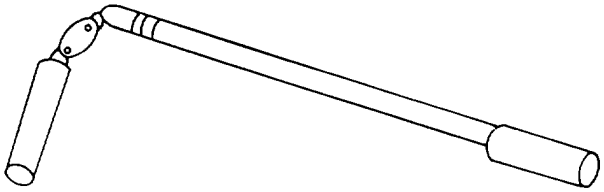

Figure 7-14. Telescoping Magnet

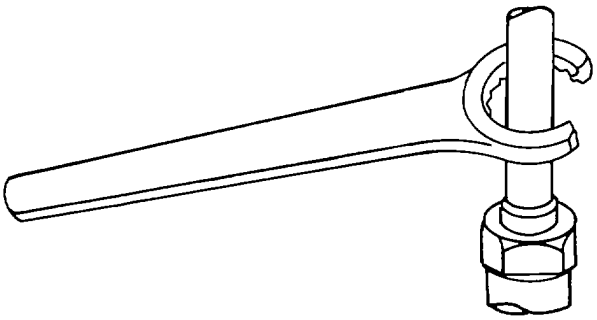

Figure 7-15. Flang Nut Wrench

Figure 7-16. Lockwire Pliers

(1) Grasp the wire between the jaws, and apply the locking sleeve with the thumb.

(2) Pull the knob to twirl the pliers which make uniform twists in the wire.

(3) If further twisting is required, push the knob back into the pliers and pull the knob again.

(4) When the wire is twisted as required, squeeze the handles together to unlock the jaws and release the wire.

(5) Cut the wire to the desired length with the side cutter.

b. Care. Lubricate the spiral twister occasionally, and apply a coat of light oil to all surfaces to prevent rust.

7-12. Deicer Boot Pliers. When a deicer boot is installed, it usually is pulled on over rivnut studs to hold it in place while the rivnut screws are started. To provide a larger gripping surface to prevent tearing the deicer boot, deicer boot pliers are used. These pliers have two rods, about one inch long, welded perpendicularly to the jaws and wrapped with tape. Figure 7-17 shows deicer boot pliers being used.

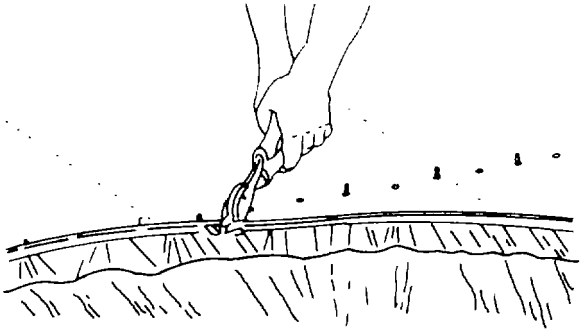

Figure 7-17. Using Deicer Boot Pliers

7-13. Leather Punch. The leather punch is used to cut holes in the deicer boot for rivnut screws, as shown in figure 7-18.

a. Description. The leather punch is shaped like a pair of pliers, but has a selection of sharp-edged tubes (for different sized holes) mounted on one jaw, and a plate on the other.

CAUTION

Under no circumstances should an attempt be made to cut holes in metal with leather punch.

b. Use. To properly locate deicer boot holes, hold deicer boot and fairing strip together. Punch holes directly thru holes in fairing strip.

7-14. Deicer Boot Roller. The deicer boot roller is used to roll the flaps of the deicer boot when cementing them to the wing, as shown in figure 7-19. Occasionally lubricate the roller axle to allow smooth rolling.

7-15. Crowfoot Wrenches. The crowfoot wrench is an open-end wrench head which is turned with a socket handle. It is used to remove and install bolts or nuts where an obstruction would prevent the use of a regular socket. A typical crowfoot wrench is shown in figure 7-20.

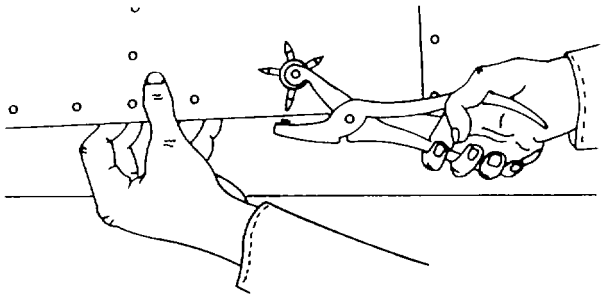

Figure 7-18. Using Leather Punch

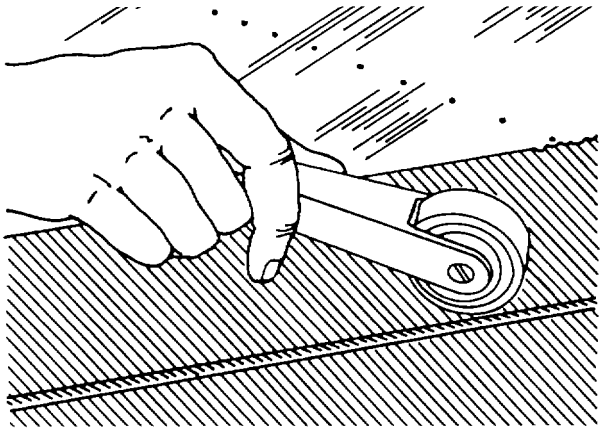

Figure 7-19. Using Deicer Boot Roller

a. Use. Figure 7-21 shows a typical use of a crowfoot wrench, where a bolt is installed in a location where an obstruction does not allow the use of a socket or a wrench. The wrench is attached to an extension, which is then attached to a socket handle which is in this case a ratchet.

NOTE

Ensure that the wrench being used is of the right size. Use of a wrench larger than the head of the bolt or nut will result in rounding of the faces.

b. Care. Observe the following practices for the care and upkeep of crowfoot wrenches:

(1) Clean wrenches after each use.

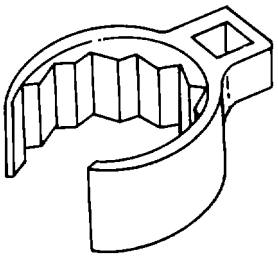

Figure 7-20. Crowfoot Wrench

(2) Apply a coat of light oil to wrenches to prevent rust.

7-16. Soldering Tools. Soldering is a metal-joining process in which a lower melting-point metal (called solder) is heated to the point where it melts and wets the joint surface and then is allowed to solidify in place. These types are shown in figure 7-22.

a. Types. The following paragraphs describe soldering guns.

(1) Electrical soldering guns. The electrical soldering guns operates from a standard 115 volt outlet. The guns operate in a temperature range of 500 to 600°F (260 to 316°C).

CAUTION

Never use a soldering gun when working on solid state equipment Serious damage to diodes, transistors, and other solid state components can result.

(2) Cordless soldering gun. The cordless soldering gun operates off a rechargeable nickel cadmium battery. The gun has a tip performance up to 50 watts and over 700°F tip temperature.

b. Safety. The following precautions must be observed when using these tools:

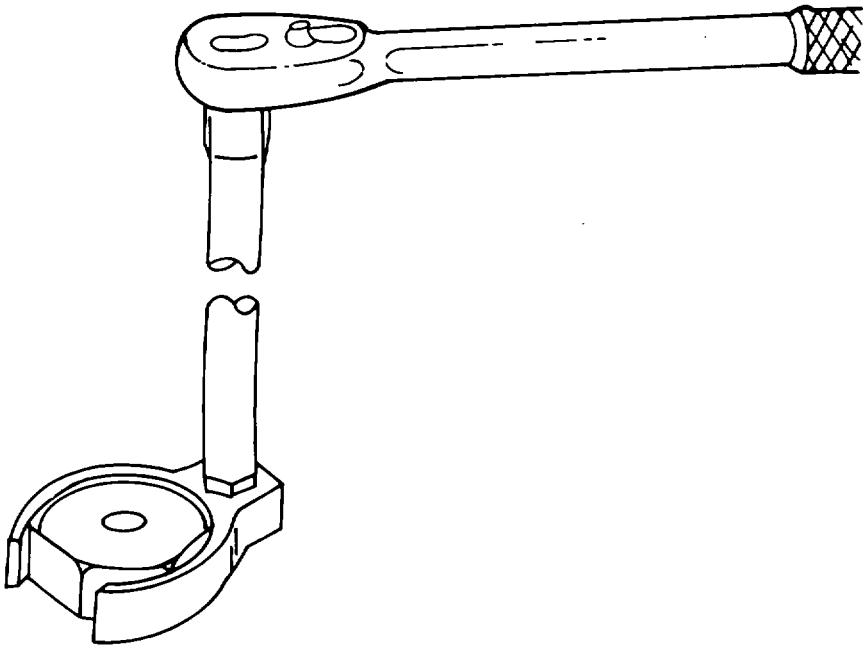

Figure 7-21. Using a Crowfoot Wrench

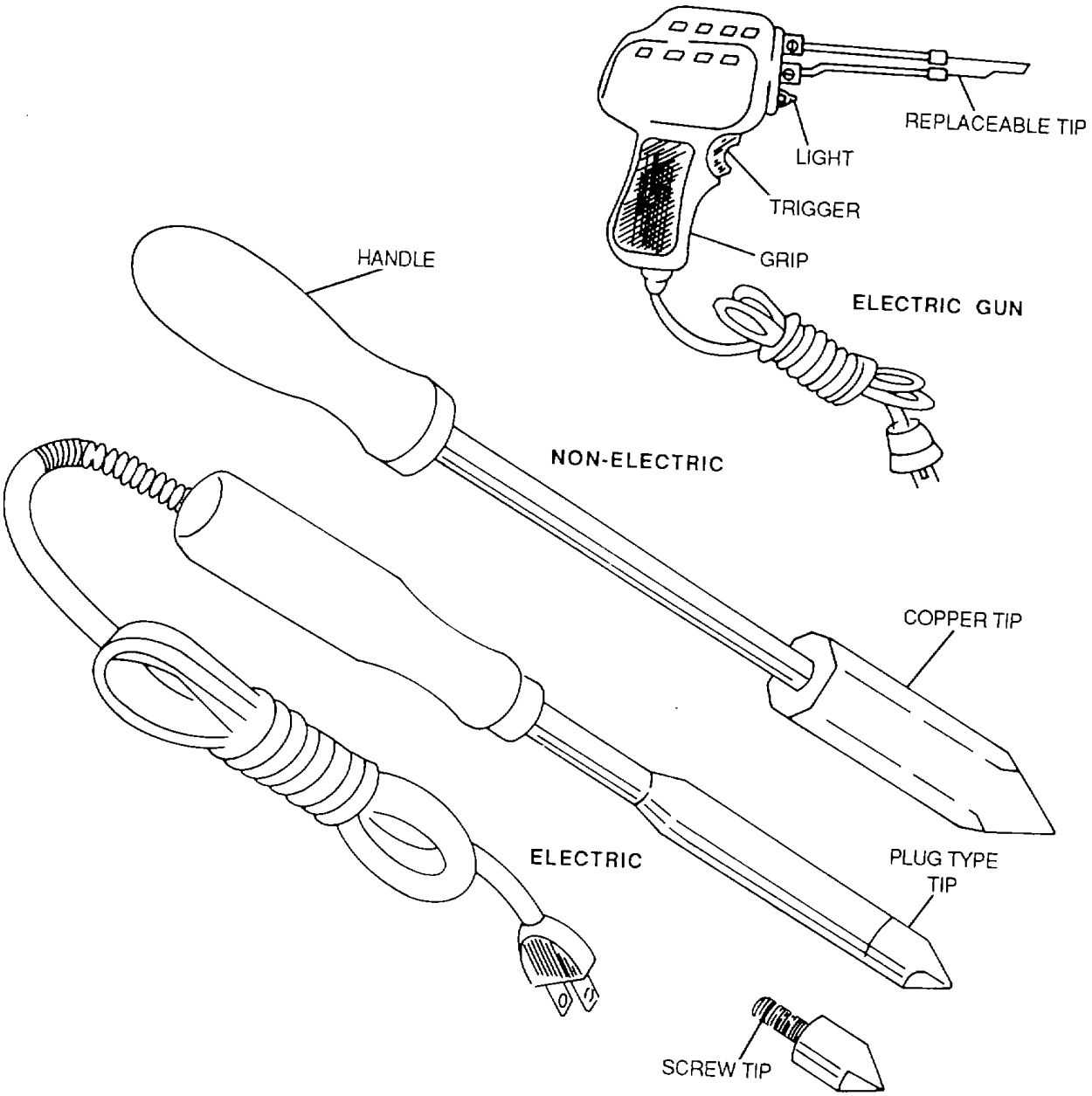

Figure 7-22. Soldering Tools

(1) Keep soldering irons away from flammable objects.

(2) In order to avoid burns, always assume that the tip is hot.

(3) Never rest a heated iron anywhere but on a metal surface or on a rack provided for this purpose.

(4) Never swing an iron to remove solder.

(5) When cleaning an iron, use a cleaning cloth or damp sponge.

(6) Hold small soldering jobs with your pliers or a suitable clamping device.

c. Tinning. If a soldering iron is new or the tip coating is deteriorated, it must be tinned (coated with solder). To accomplish this procedure, proceed as follows:

(1) Hold the iron in a vise and file the point to its correct shape.

(2) Heat iron tip.

(3) While hot, file lightly to remove scale and old solder.

(4) Dip the point into a flux and apply solder, Federal Specification QQ-S-571, to the tip of the iron. The coating of solder will be bright and shiny and very thin. This aids in the rapid transfer of heat to the work.

d. Soldering Procedure. The following procedures must be performed in order to ensure a firmly soldered joint.

(1) Ensure that the parts to be soldered are absolutely clean. While cleaning these parts, take care not to produce cuts or nicks which greatly reduce the mechanical strength of the wire, especially under vibration.

NOTE

The joint should be prepared just prior to soldering.

(2) Securely join the parts to be soldered before any soldering is done.

(3) As shown in figure 7-23, hold the soldering iron beneath the splice being soldered with as much mechanical contact as possible to permit maximum heat transfer

(4) Apply the solder, Federal Specification QQ-S-571, to the splice.

NOTE

Before the solder itself melts, the rosin core will have melted and run out over the splice to flux the area.

(5) When the solder has coated the splice completely, the job is finished. A good, well-bonded connection is clean, shiny, smooth, and round. It approximately outlines the terminal and the wire.

e. Care. The following paragraphs describe procedures for the care and upkeep of the different types of soldering tools.

(1) Soldering gun. The tip of a soldering gun should be removed occasionally to permit cleaning away the oxide scale. If for any reason the tip does become damaged, replacement tips are available.

(2) Soldering iron. Observe the following practices for the care of soldering irons:

(a) Ensure that removable tips are securely fastened into the heater unit.

(b) Keep the tips clean and free from copper oxide.

(c) After completing a job, disconnect the powercord and, when the iron has cooled off, stow it in its proper storage area.

(d) When storing irons for long periods of time, coat the shaft and all metal parts with rust-preventive compound and store in a dry place.

CHAPTER 8

TORQUE TOOLS AND TORQUE PRINCIPLES AND PROCEDURES

8-1. General. This chapter discusses the various types of torque tools available to the aircraft repairer.

8-2. Types of Torque Tools. The torque tools which are used in the maintenance of Army aircraft is as follows.

a. Manual Torque Tools. Threaded fasteners can be tightened by the following manual torque tool.

(1) Torque screwdriver. The preset screwdriver, shown in figure 8-1, is preset to the desired torque. A device in the tool limits the applied torque to the preset torque by allowing the handle to turn free of the driven bit when the preset torque is reached.

(2) Torque Wrenches. Torque wrenches are divided into three types: deflecting beam, rigid frame and audible indicating.

(a) Deflecting beam torque wrench. On the deflecting beam torque wrench shown in figure 8-2, the deflecting element is the beam itself. When a load is applied, the beam bends (deflects). A pointer attached to the socket end remains straight and indicates the applied load as torque on a graduated plate attached to the handle end. Other wrenches of this type may have a graduated dial instead of the indicator plate. Audible sensory indicators are sometimes provided in addition to the indicator plate or dial. On the deflecting beam wrench, the location of the grip on the handle determine the length of the lever, and the accuracy of the torque reading. For this reason, some flexible beam wrenches are provided with a pivoted grip to insure that the point of load application is maintained at the proper distance from the socket drive.

Figure 8-1. Preset Torque Screwdriver

(b) Rigid frame torque wrench. The deflecting element of the' rigid frame torque wrench shown in figure 8-3, is enclosed in a rigid frame which functions as the lever. The deflecting element actuates a needle on a graduated dial that indicates the applied torque.

(c) Audible-indicating torque wrench. The audible-indicating torque wrench, shown in figure 8-4, has a micrometer-type barrel for presetting the desired torque. The deflecting element is a compression spring that applies pressure to a lever in a detent. When the preset torque is reached, the lever slips out of the detent with an audible click which can also be felt in the handle.

b. Power Torque Tools. The two common types of powered torque tools are the nutrunner and screwdriver.

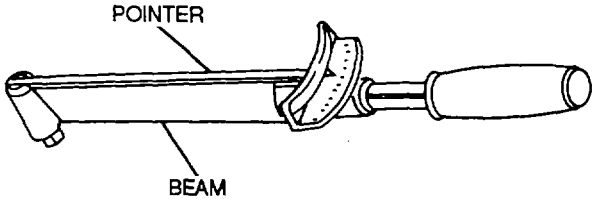

Figure 8-2. Deflecting Beam Torque Wrench

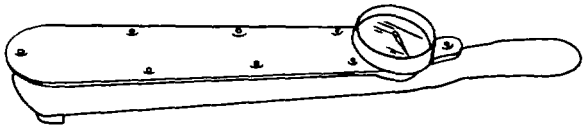

Figure 8-3. Rigid Frame Torque Wrench

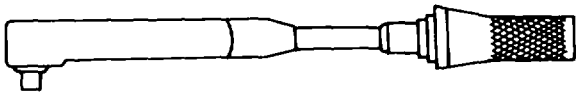

Figure 8-4. Audible-Indicating Torque Wrench

and the impact wrench. These tools operate on compressed air at a pressure of 90 (+10) psi. The air supply hose must be a minimum 5/16 inch inside diameter and should not be more than 15 feet long. Observe all standard precautions for the use of air-powered tools.

NOTE

The torque that the tool will apply to a fastener at a given torsion bar setting is dependent to some extent on the bolt diameter and length, the type of nut, and the compression characteristics of the metal in the joint. The shutoff torque of the tool must be checked and the torsion bar adjusted as required when there is any change in any of these conditions, even though the required torque remains the same.

8-3. Torque Wrench Selection. The appropriate torque wrench can be selected for a specific job, based on the type desired, the range of the tool, and the appropriate torque units.

a. Types. In aircraft maintenance applications, the rigid frame with the indicating dial and the audible indicating torque wrenches are used in preference to the flexible beam-type wrench. The audible-indicating torque wrench is preferred since it can be used in places of limited accessibility where it would be difficult to read a dial or scale while performing the tightening operation. For the combinations of features available in torque wrenches, see figures 8-5 through 8-14.

b. Range. When selecting a torque for a particular application, the range of the wrench must be considered. When practical, the required torque value should be between the 30- and 80-percent points of the torque wrench range. The accuracy of most torque

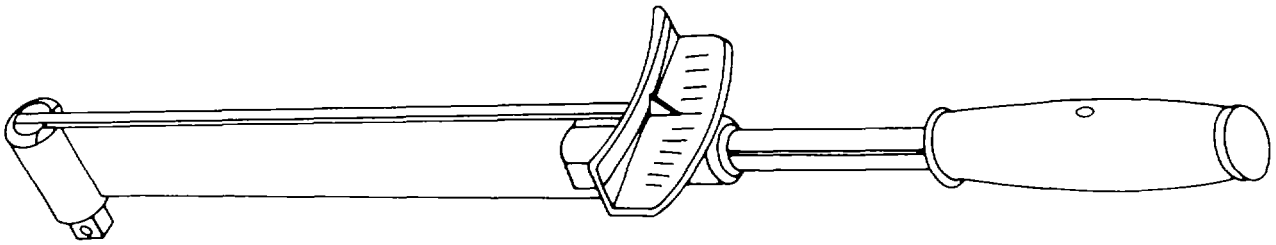

Figure 8-5. Type I, Class 1, Style A Torque Wrench - Deflecting Beam with Indicator Plate (Direct Reading)

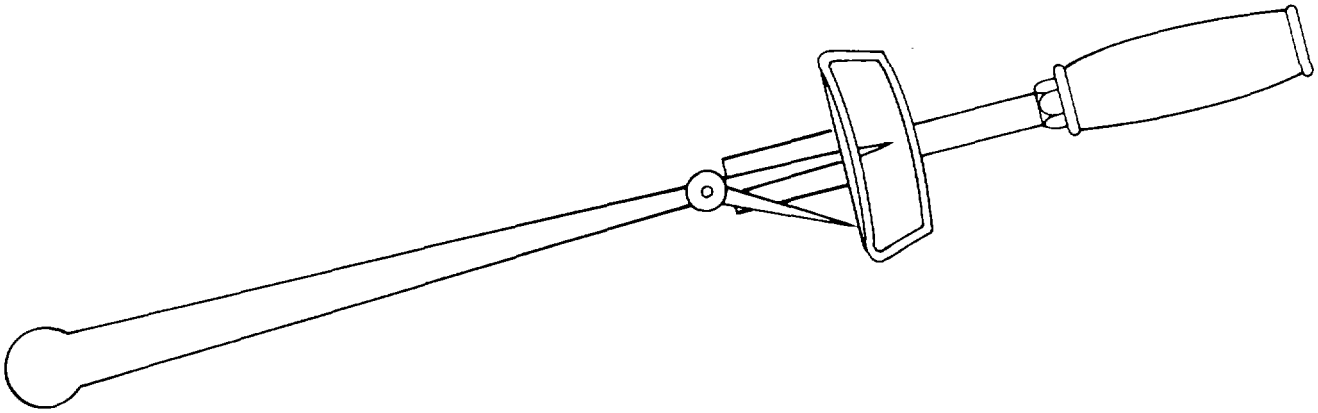

Figure 8-6. Type I, Class 1, Style B Torque Wrench - Deflecting Beam with Indicator Plate (Direct Reading with Feel Impulse and Audible Signal)

wrenches trends to decrease at the extremes of the torque range. The best accuracy is obtained between the 30- and 80-percent points of the range. The graduation increments on the torque wrench should not be greater than 10 percent of the torque value being measured. Refer to table 8-1 for the accuracy limits for torque tools.

c. Appropriate Units. The torque wrench should be calibrated in the same torque units (inch- pounds, foot-pounds, etc.) as are used to specify the torque for the fastener.

8-4. Determining Correct Torque Value. There is a correct torque value for tightening every fastener. In some instances, the torque value will be given in the maintenance manual with the detailed instructions for the assembly or the installation of the components. In most instances, the torque value will be obtained from a table, similar to table 8-2, in the general instructions section of the aircraft maintenance manual. Table 8-2 is a standard table of recommended torque values for tightening different types of standard nuts. This table, or its equivalent, should be consulted for the correct torque value for any fastener that does not have a torque value specified in the assembly instructions.

8-5. Torque Wrench Operation and Use. To properly use a torque wrench, the mechanic must pos

Table 8-1. Torque Tool Accuracy Limits

Test instrument parameters	Performance specification
Torque Wrenches	Range: 0 to 1000 foot-pounds Accuracy: (± 4 percent) of reading from 20 percent of full scale to full scale.1
Torque Screwdriver	Range: 0 to 100 inch-pounds Accuracy: (± 3 percent

[1]No accuracy requirement from 0 to 20 percent of full scale of wrench.

sess a basic knowledge of essential related details, and must exercise a reasonable amount of care and skill.

a. Force Application. A smooth, steady force must be applied to obtain accurate torque values. Rapid or jerky force can result in considerable error in the torque applied.

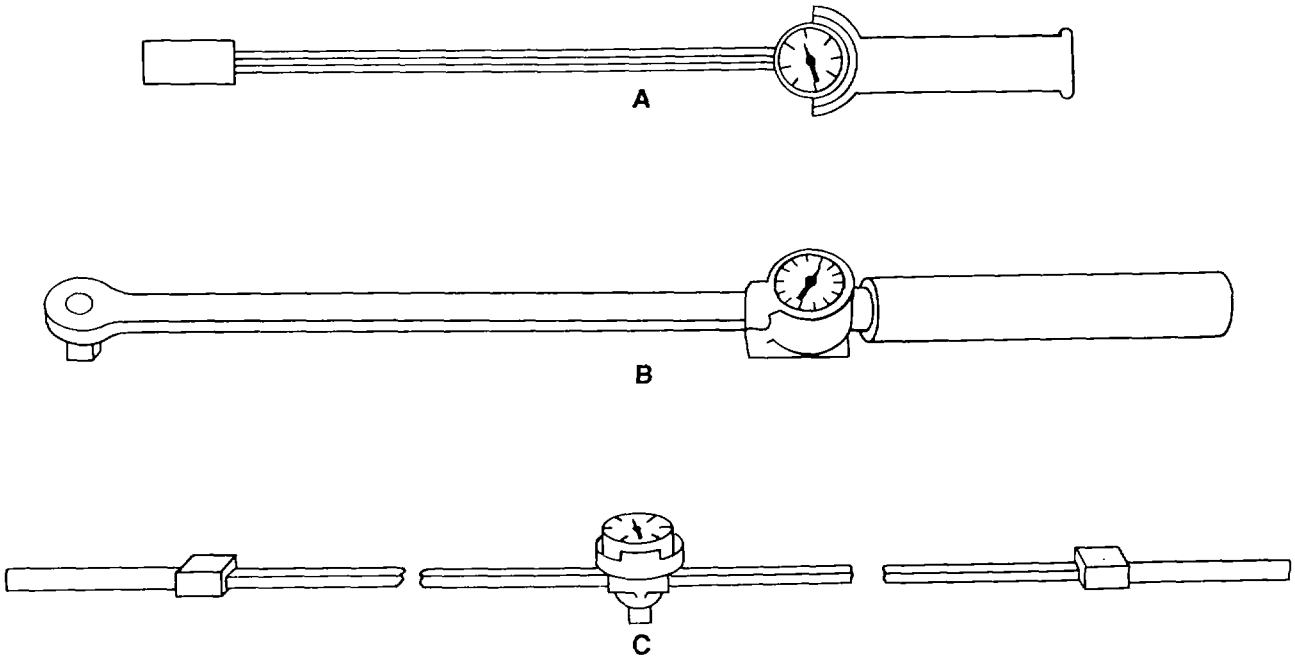

Figure 8-7. Type I, Class 2, Style A Torque Wrenches - Deflecting Beam with Indicating Dial (Direct Reading)

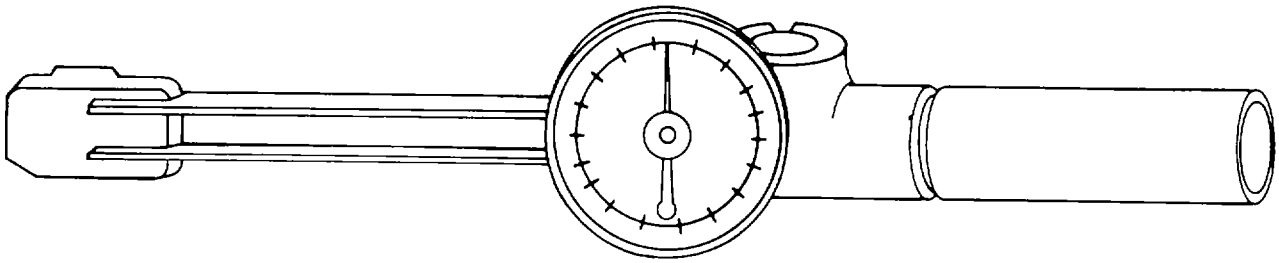

Figure 8-8. Type I, Class 2, Style B Torque Wrench - Deflecting Beam with indicating Dial (Direct Reading with Audible Signal)

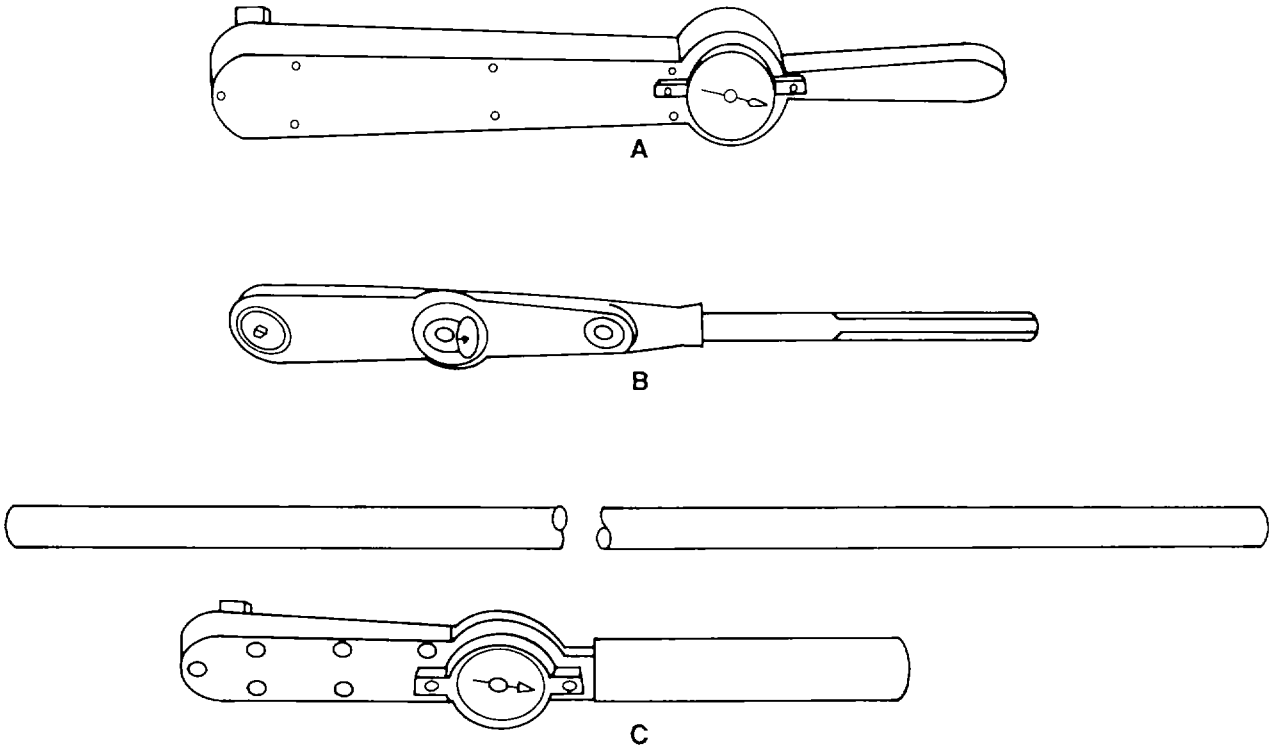

Figure 8-9. Type II, Style A Torque Wrench - Rigid Case with Indicator Dial (Direct Reading)

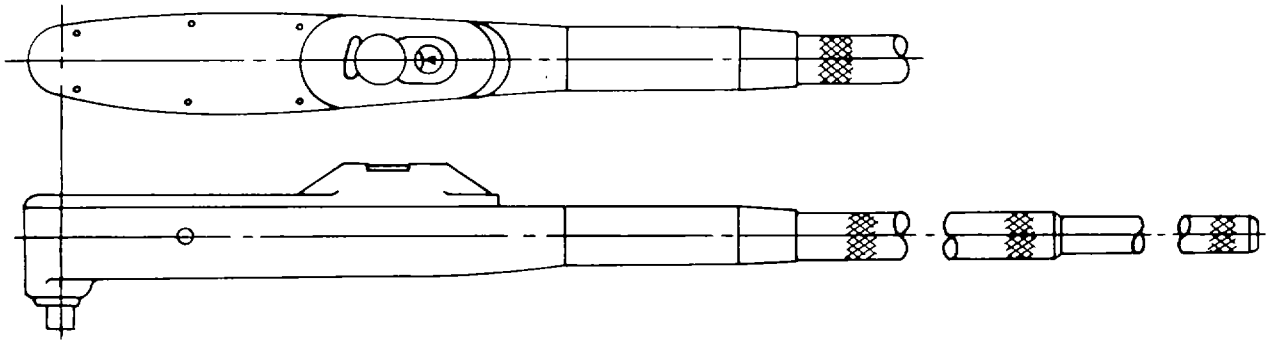

Figure 8-10. Type II, Style B Torque Wrench-Rigid Case with Indicator Dial, Presetting Torque Dial (Direct Reading with Audible Signal)

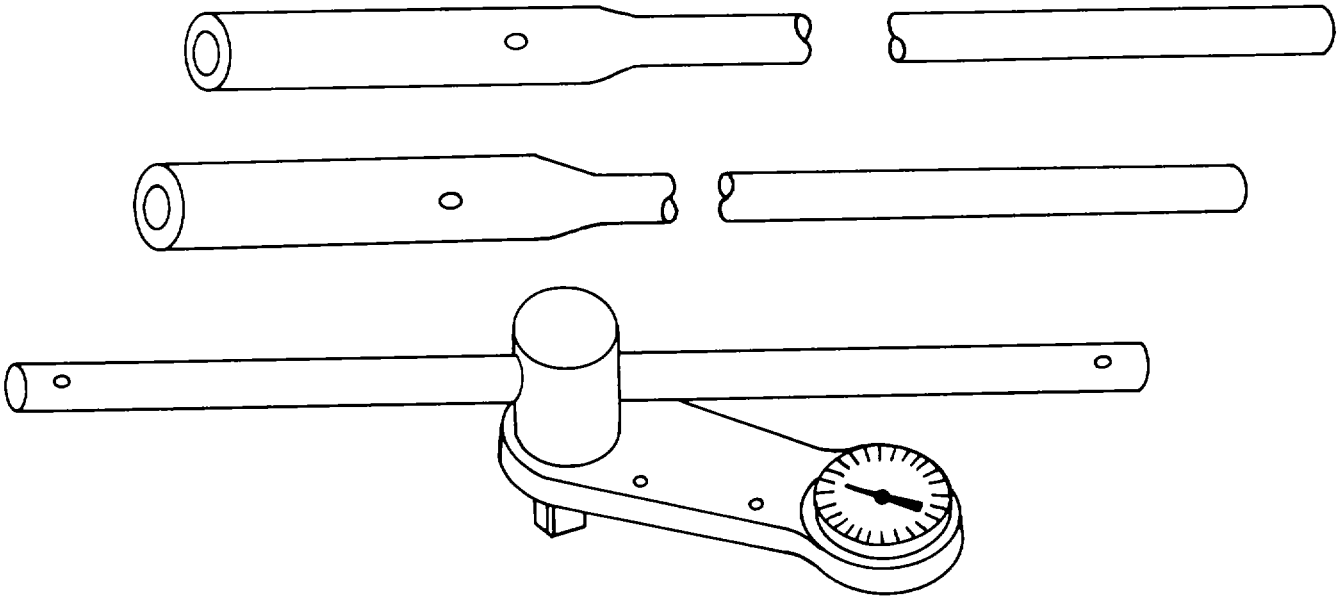

Figure 8-11. Type II, Style C Torque Wrench-Rigid Cases with Presetting Dial (Direct Reading with Flashlight Signal)

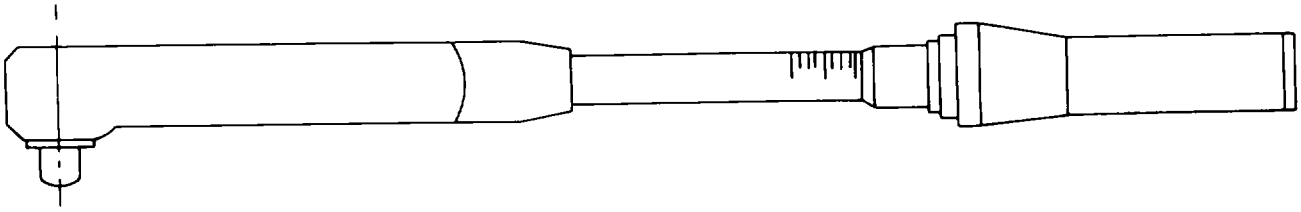

Figure 8-12. Type III, Class 1 Torque Wrench-Rigid Case, Micrometer-Style Torque Presetting, Audible Signal, Plain Head

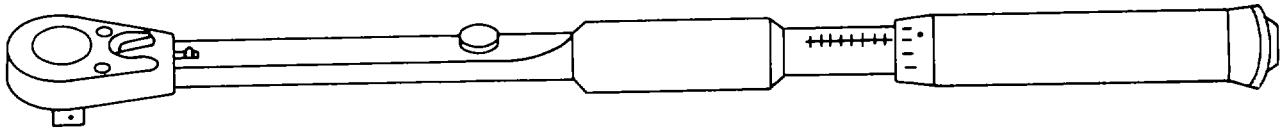

Figure 8-13. Type III, Class 2 Torque Wrench-Rigid Case, Micrometer-Style Torque Presetting, Audible Signal, Ratchet Reversible Head

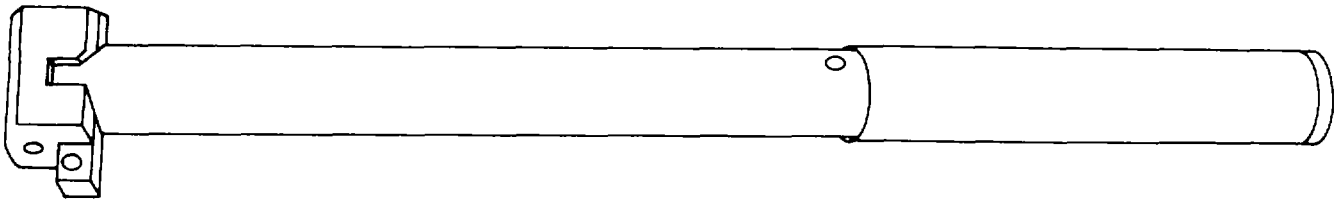

Figure 8-14. Type V Torque Wrench-Rigid Case, Preset Torque, Audible Signal

b. Reading the Torque Value. With the indicating dial-type wrench, the torque value is read on the dial as the force is applied. With the audible-indicating torque wrench, the torque value is preset on the wrench by releasing the lock in the end of the handle and rotating the grip to the desired torque setting. When the preset torque value is reached during the tightening operation, the handle will automatically release or break, producing approximately 15 to 20 degrees of free travel. This release is distinct, easily detected by the mechanic, and indicates completed torquing action on the fastener.

c. Use of Attachments and Extensions. Many torque wrench applications will require the use of attachments such as adapters and extensions to reach fasteners in places of limited accessibility or to position the torque wrench so that the dial is more easily read. In some cases, the use of such attachments may greatly affect the actual torque applied to the fastener.

(1) Concentric attachments. The use of an attachment which operates in line with the drive square of the wrench presents no particular problem, since the effective length of the wrench is not lengthened or shortened. The torque applied to the fastener will therefore be the torque value indicated on the dial. Figure 8-15 illustrates typical attachments of this type. These attachments may also be used on the audible indicating torque wrenches without affecting the torque setting.

(2) Nonconcentric attachments. For some tightening applications, an attachment can be used on the torque wrench that does not operate concentrically with the drive square. An attachment of this type has the effect of lengthening or shortening the lever length, and the torque value shown on the dial is not the torque that is applied to the fastener. When using these attachments, it is necessary to calculate the effect of the lever length to determine the correct torque reading.

Table 8-2. Recommended Torque Values

Size and Thread	Plain & Castellated Steel Hex Nuts	Thin Plain & Castellated Steel Hex Nuts
Fine Thread		
	Average	**Average**
8 - 36	12 - 15	7- 9
10- 32	20 -25	12 - 15
1/4 - 28	50 - 70	30 -40
5/16 - 24	100 - 140	60 - 85
3/8 - 24	160 - 190	95 - 110
7/16 - 20	450 - 500	270 -300
1/2 - 20	480 - 690	290 - 410
9/16 - 18	800 - 1000	480 - 600
5/8 - 18	1100 - 1300	600 - 780
3/4 - 16	2300 - 2500	1300 - 1500
7/8 - 14	2500 - 3000	1500 - 1800
1 - 14	3700 - 5500	2200 - 3300
11/8 - 12	5000 - 7000	3000 - 4200
11/4 - 12	9000 - 11000	5400 - 6000
Coarse Thread		
8- 32	12 - 15	7- 9
10 -24	20 - 25	12 -15
1/4 - 20	40 - 50	25 - 30
5/16 - 18	80 - 90	48 - 55
3/8 - 16	160 - 185	95 - 100
7/16 - 14	235 -255	140 - 155
1/2 - 13	400 - 480	240 - 290
9/16 - 12	500 - 700	300 - 420
5/8 - 11	700 - 900	420 - 540
3/4 - 10	1150 - 1600	700 - 950
7/8 - 9	2200 - 3000	1300 - 1800

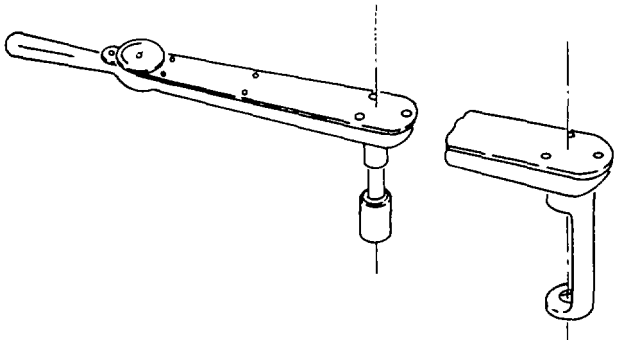

Figure 8-15. Concentric Torque Wrench Attachments

(a) Extending lever length. Figure 8-16 shows an attachment that adds to the lever length with the applicable formula for obtaining the correct torque reading. The formula is as follows:

$$TW = \frac{TA \times L}{L+A}$$

where:

TA = Actual torque applied to fastener

TW = Indicated torque value on torque wrench

L = Lever length

A = Attachment length

For example, if the length of the torque wrench is 10 inches, the length of the attachment Is 4 inches, and the desired torque to be applied is 300 inch-pounds, the formula would be completed as follows:

$$TW = \frac{TA \times L}{L+A}$$

$$TW = \frac{300 \times 10}{10+4}$$

$$TW = \frac{3000}{14}$$

TW = 214 inch-pounds

Therefore, the torque wrench must indicate 214 inch-pounds in order for the desired torque of 300 pounds to be obtained on the fastener.

(b) Shortening lever length. In the previous case of added lever length, the indicated torque value is smaller than the actual torque value. Attachments, when used as shown in figure 8-17, shorten the effective lever length. In these instances, the attachment length A is subtracted in the formula and the indicated torque value is greater than the actual torque value.

(c) Importance of proper technique. When using these formulas, the lever length L is a critical factor. On a flexible beam-type wrench with a pivoted grip, this dimension is fixed, and the pivot point of the grip determines the point of force application and therefore the length of the lever. On the rigid frame and audible-indicating torque wrenches, the point of force application must be in the center of the grip as shown in figure 8-18. In figure 8-18, using the 10-inch lever length, 107 inch-pounds of torque, as read on the torque wrench, results in 150-pounds of torque on the fastener when the force is applied correctly to the center of the grip. If the force were applied to the torque wrench at the tip end or the root of the grip, as shown in figure 8-19, at the same 107 inch-pounds reading, the torque applied to the fastener would be 142.6 inch-pounds and 160.5 inch-pounds, respectively.

(3) Angle attachments. Attachments will not always extend straight from the end of the torque wrench. In instances where the centerline of the adapter is not in line with the centerline of the torque wrench, as shown in figure 8-20, the length of the adapter is not used. The effective length used to calculate the torque reading is the distance A in figure 8-20.

8-6. Care of Torque Tools. A torque tool is a precision measuring tool and, when handled and used with reasonable care, will remain accurate and serviceable for a considerable period of time. Observe the following practices for the care and upkeep of torque tools:

a. Never toss a torque tool carelessly among other tools. Stow it in a clean, dry place where it will not be subjected to shock or damage.

b. On audible-indicating torque wrenches, return the micrometer-type barrel to lowest setting after each use and before returning to storage.

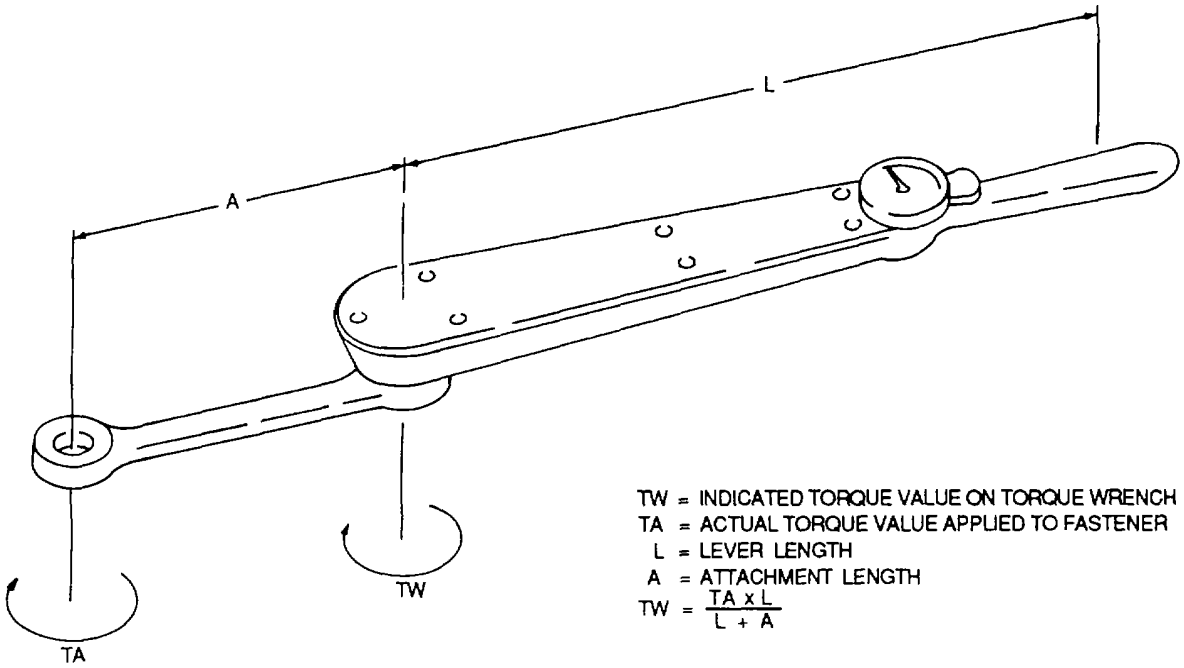

Figure 8-16. Nonconcentric Attachments to Torque Wrench

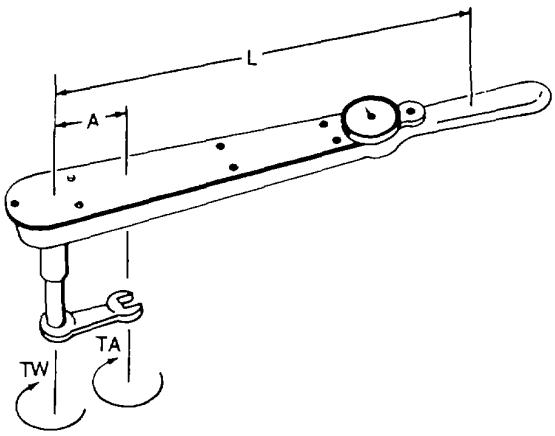

TW = INDICATED TORQUE VALUE ON TORQUE WRENCH
TA = ACTUAL TORQUE VALUE APPLIED TO FASTENER
L = LEVER LENGTH
A = ATTACHMENT LENGTH

$$TW = \frac{TA \times L}{L - A}$$

EXAMPLE

TA = REQUIRED TORQUE = 200 INCH POUNDS
L = 12 INCHES
A = 2 INCHES

$$TW = \frac{200 \times 12}{12 - 2} = \frac{2400}{10} = 240 \text{ INCH POUNDS}$$

Figure 8-17. Torque Wrench Attachment Offset Reverse Extension

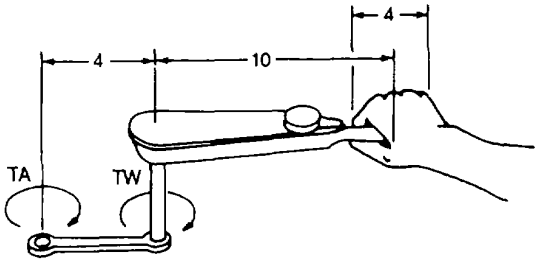

TA = REQUIRED TORQUE = 150 INCH-POUNDS

$$TW = \frac{TA \times 10}{10 + 4} = \frac{150 \times 10}{10 + 4} = \frac{1500}{14} = 107 \text{ INCH-POUNDS}$$

Figure 8-18. Proper Application of Force When Using Extension

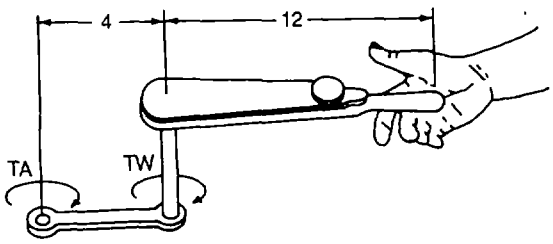

TW = TORQUE WRENCH READING = 107 INCH-POUNDS

$$TA = \frac{TW \times (L + A)}{L}$$

$$TA = \frac{107 \times (12 + 4)}{12}$$

$$TA = \frac{107 \times 16}{12} = 142.6 \text{ INCH-POUNDS}$$

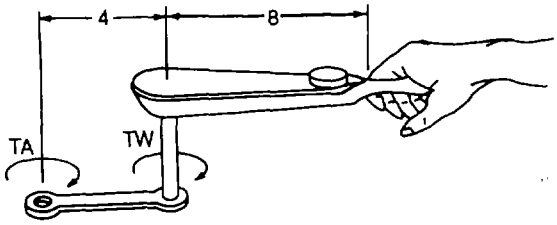

TW = TORQUE WRENCH READING = 107 INCH-POUNDS

$$TA = \frac{TW \times (L + A)}{L}$$

$$TA = \frac{107 \times (8 + 4)}{8}$$

$$TA = \frac{107 \times 12}{8} = 160.5 \text{ INCH-POUNDS}$$

Figure 8-19. Improper Application of Force

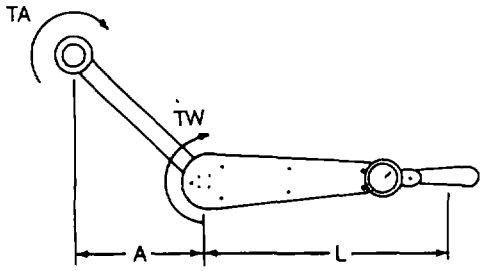

$$TW = \frac{TA \times L}{L + A}$$

Figure 8-20. Angle Extension Torque Wrench Attachment

c. Never drop a torque tool on the floor. If this does happen, the wrench should be checked for accuracy before its use.

d. Do not file, mark, or etch the beam of a flexible beam wrench. This structure is the measuring element of the wrench. Any alteration will seriously affect the accuracy of the wrench.

e. Do not load a tool in excess of its capacity. Overloading a torque tool can result in permanently deforming the torque-sensing element and damaging the tool.

f. Before use, check all nonadjusting torque wrenches for minimum torque indication. If they do not indicate minimum torque, tag them for calibration.

8-7. Testing of Torque Tools. A torque wrench is subject to wear and other factors which can be detrimental to the accuracy of the tool. Periodic testing in accordance with applicable directives is essential to ensure continued accuracy. Several different types of torque wrench testers are manufactured and, to ensure their proper use, some understanding of their operating principles is desirable.

a. *Description*. A torque wrench tester consists of a force resisting element to absorb the load applied by the tool and a dial or scale to indicate the magnitude of the applied load in torque units. A maximum reading pointer is provided that remains at the point of maximum applied torque and holds the reading when the load is released until reset to zero by the operator.

b. *Indication*. The force resisting element may be a weight, a steel spring, a torsion bar, or strain gauge load cells. The movement of deflection of the force resisting element resulting from the application of the load applied by a torque wrench is relatively small and must be magnified in order to indicate the small variations in the amount of the applied load. Magnification is accomplished on mechanical-type tester by a gear segment and pinion or a mechanical linkage. Other types of testers use optical magnification or electronic amplifiers.

8-8. Repair and Calibration. The repair and calibration of torque tools is normally the responsibility of the Area TMDE Support Team (ASTS) (TMDE is Test, Measurement, and Diagnostic Equipment). TB 750-111 contains the procedures for repair and calibration of torque wrenches for local units.

8-9. Torque Multipliers. The direct application of torque to a fastener is limited by the force that can be applied and by the length of the wrench. The force varies to some extent but is approximately 100 pounds. With a wrench 30 inches long, the torque that can be applied is 100 x 30 or 3000 inch-pounds (250 foot-pounds). Higher torque values are possible with longer wrenches; however, there is a limit to the size of a wrench that can be used effectively by one man. Torque multipliers are used for the high torque values, such as those specified

for engine thrust nuts, propeller nuts, and helicopter rotor hub nuts. Figure 8-21 and 8-22 show typical torque multipliers.

a. Use. Torque multipliers are available in ratios ranging from 3:1 to 11.1:1. Multipliers must be anchored or secured to a structure relative to the fastener being tightened, or be fitted with a reaction bar to prevent the multiplier from turning. For this reason, their use is usually restricted to special applications.

b. Determining Torque. When using a torque multiplier, the torque to be applied with the torque wrench is determined by dividing the specified torque for the fastener by the multiplier ratio. For example: If the torque specified for the fastener is 3000 foot-pounds and a torque multiplier with an 11.1 to 1 ratio is going to be

$$\frac{3000}{11.1}$$

used, then 11.1 or 270-pounds is the torque applied by the torque wrench. In this case, a 350 foot-pound capacity torque wrench or a wrench up to a 900 foot-pound capacity would be used to apply 270 foot-pounds of torque to the input of the torque multiplier. In this range

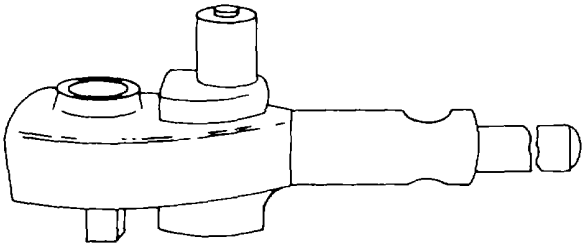

Figure 8-21. General Use Torque Multiplier

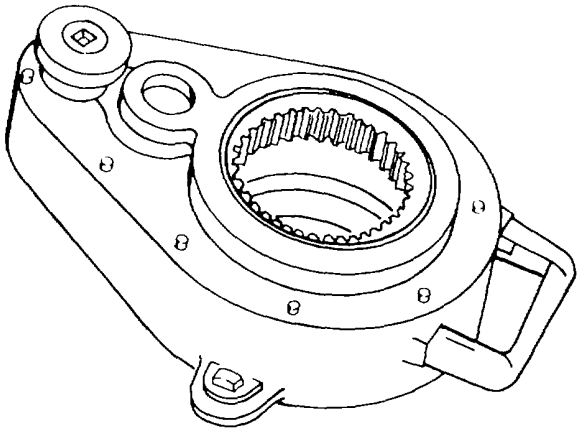

Figure 8-22. Hub Nut Torque Multiplier

of torque wrenches, the applied torque is between the desired 30- to 80-percent range.

8-10. Torque Multiplier Power Wrench. Utilizing a powerful gear train, the torque multiplier power wrench, shown in figure 8-23, is completely mechanical in its operation. This tool operates on the same principle as the general purpose torque multipliers described in paragraph 8-9. The wrench is operated by turning a small hand crank, but power tools (including air or electric drills, nut runners, etc.), may be used for speedier operation. A balanced features of the drive gearing prevents snap-back should the input crank be released.

a. Description. Output torque of the torque multiplier power wrench, can be read directly. The torque indicator is calibrated in foot-pounds or inch-pounds. The operator can also read degree-of-turn on a protractor on the input face of the unit. Wrench output is a standard size square female drive. A ratchet assembly controls the direction of rotation and provides for quick take up and alignment. Counter torque is absorbed by two pins located on the back of the wrench. This reaction force is transferred to the load cells and then to the gauge for direct output torque reading.

b. Use. As a general rule, always turn the input handle in the direction that the output drive must turn. Refer to the applicable aircraft maintenance manual for specific uses for this tool.

NOTE

Do not use impact wrenches of any kind to operate this wrench.

8-11. Torque Procedures Without a Torque Wrench. In certain instances, when a torque wrench is not available, the aircraft maintenance manual may prescribe an alternate method for determining that a fastener is properly torqued. The two methods which are commonly used are the wrench-arc method of tightening, and the use of preload-indicating washers.

a. Wrench-Arc Method of Tightening. The wrench-arc method of tightening will be used only when specified in applicable aircraft maintenance manuals.

(1) Preliminary steps. The following paragraphs provide preliminary steps that must be accomplished before performing this operation:

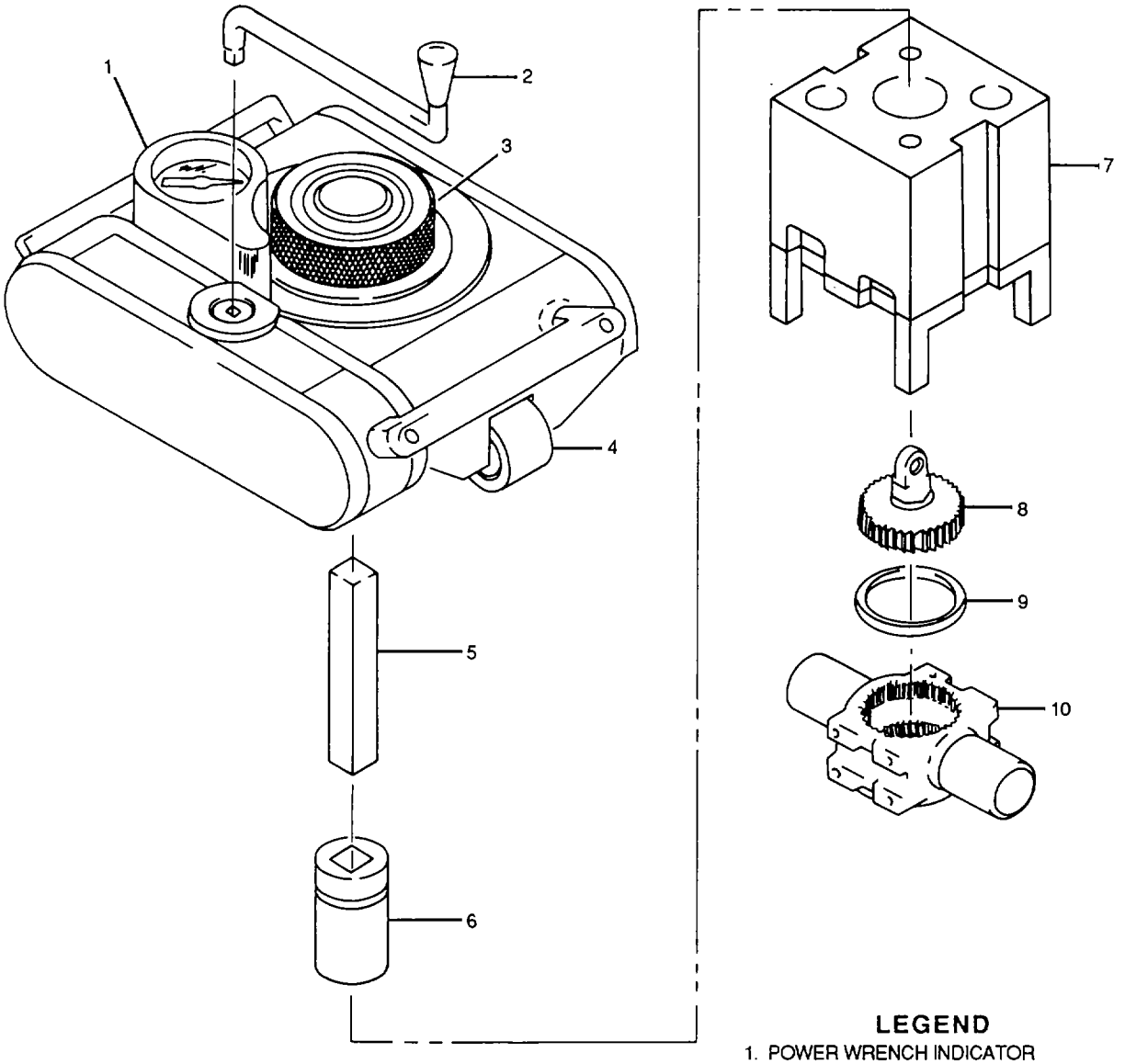

LEGEND

1. POWER WRENCH INDICATOR
2. INPUT CRANK HANDLE
3. KNURLED RATCHET INDEXER
4. POWER WRENCH PD 1201
5. DRIVE BAR PD 1240
6. SOCKET PD 2659
7. REACTION TORQUE ADAPTER PD 2660
8. MAST NUT
9. WASHER
10. TRUNNION

Figure 8-23. Torque Multiplier Power Wrench

(a) Before tightening, be sure that all threads, sealing and mating surfaces are clean and free of nicks, burrs, and scratches.

(b) Install fittings (except as specified below) with antiseize compound, Federal Specification TT-S-1732.

1 Install hydraulic system fittings using hydraulic oil as both a lubricant and antiseize compound.

2 Use thread compound, MIL-T-5542, as both an antiseize and a sealing measure while installing oxygen system fittings.

(c) Get the proper size open-end wrench with 15-degree offset heads to snug the nut.

NOTE

The snug (no torque) condition is reached when, using an open-end wrench, a positive increase in resistance (on the nut) to turning is felt (greater than run-on torque), when parts appear to be properly seated, and when no looseness between mating parts is noted.

(2) Tightening to 15-degree wrench arc. Proceed as follows:

(a) Using an open-end wrench, snug the nut.

(b) With wrench still positioned on nut, establish a line of sight using wrench handle, as shown in figure 8-24.

(c) Use angular difference between handle and wrench flats (15 degrees) to visually measure amount that nut will have to be turned.

(d) Turn wrench until flats on nut (engaged by wrench) are aligned with line of sight established by handle in figure 8-24.

(3) Alternate method for tightening to 15-degree wrench arc. Proceed as follows:

(a) Using an open-end wrench, snug the nut.

(b) With wrench still positioned on nut, use engaged nut flats to establish a line of sight, as shown in figure 8-25.

(c) Turn wrench until handle is aligned with line of sight.

(4) Tightening to 60- or 120-degree wrench arc. In this method of tightening, primarily used for tube fittings, the flats on the union are used as a reference. Wrenches other than open-end wrenches (crowfeet or tubing wrenches) may be used. Proceed as follows:

(a) Using an open-end wrench, snug the nut.

(b) Use the corners of coupling nut and of mating union to gauge amount that coupling nut will have to move, as shown in figure 8-26.

(c) Turn coupling nut 1 flat for 60 degree wrench arc.

(d) Turn coupling nut 2 flats for 120 degree wrench arc.

(5) Tightening to 30-degree wrench arc. Proceed as follows:

(a) Using an open-end wrench, snug the nut.

(b) With wrench still positioned on nut, note position of wrench handle, and pick out point of reference in line with handle, as shown in figure 8-27.

(c) Invert wrench using same nut flats. Angular difference between center-lines of wrench in the two positions is 30 degrees.

(d) Turn wrench to position established in figure 8-27.

(6) Tightening to 90-degree or 180-degree wrench arc. In this procedure, wrenches other than open-end (box, tubing, crowfeet) may be used. Any local reference, such as the engine or component centerline, may be used to judge wrench travel.

(a) Using an open-end wrench, snug the nut.

(b) For 90 degree arc, turn wrench until handle is perpendicular (at a right angle) to its starting position, as shown in figure 8-28.

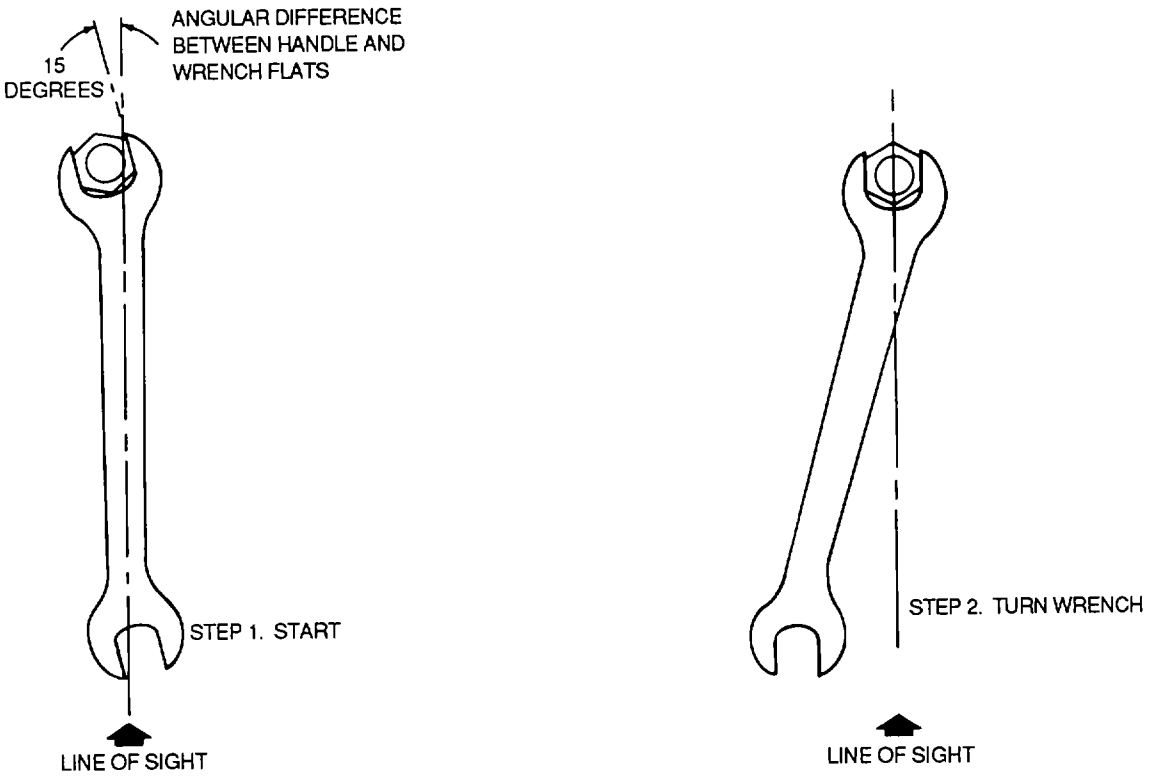

Figure 8-24. Tightening to 15-Degree Wrench Arc

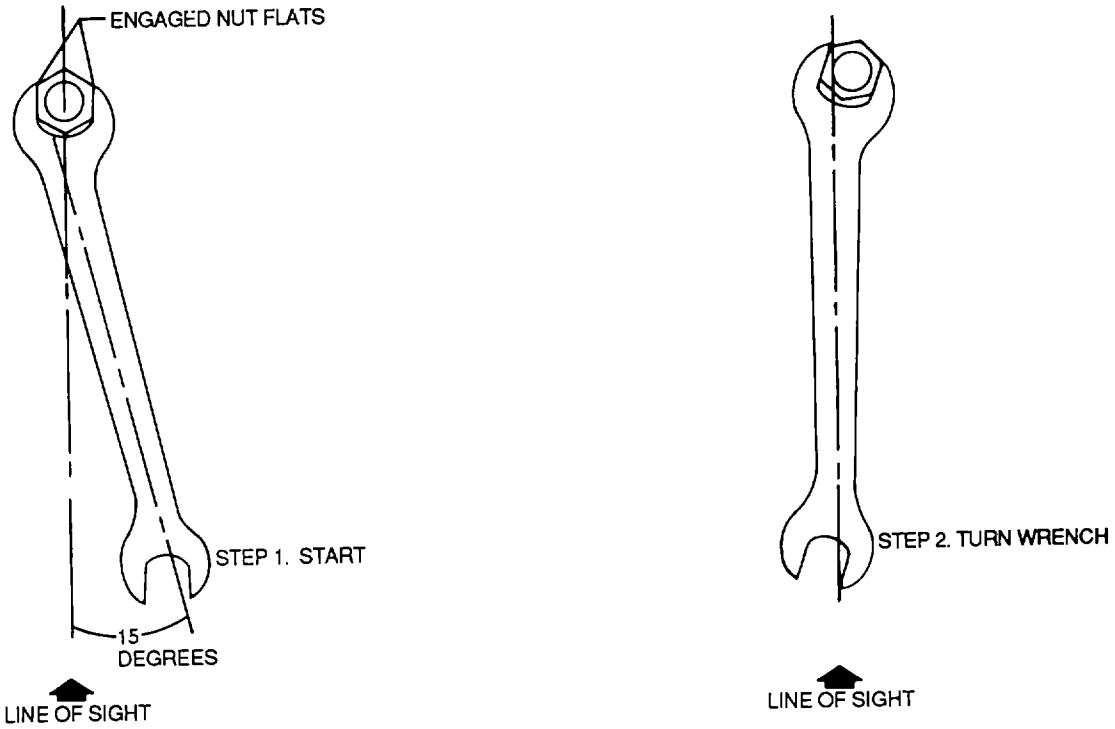

Figure 8-25. Alternate Method for Tightening to 15-Degree Wrench Arc

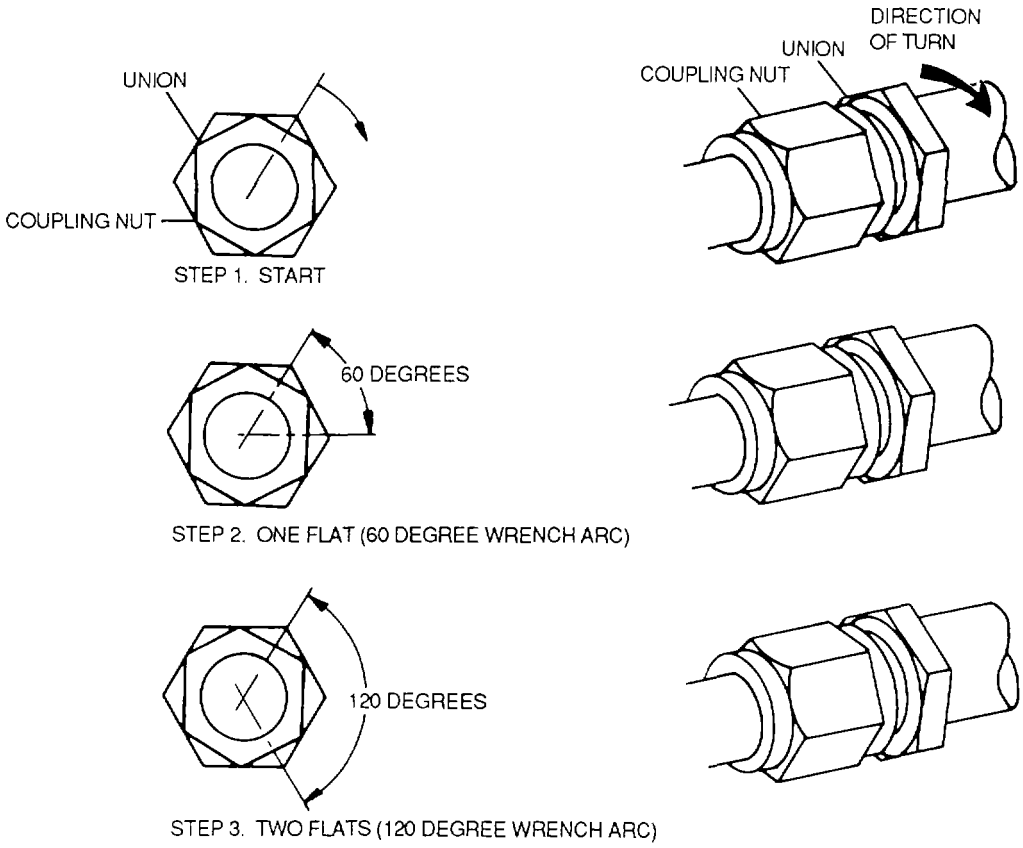

Figure 8-26. Tightening to 60- or 120-Degree Wrench Arc

(c) For 180 degree arc, turn wrench until handle points in opposite direction.

b. *Preload indicating Washers*. The preload indicating washer, shown in figure 8-29, consists of two plain washers, one inner preload washer, and one outer preload washer. The plain washers mash the inner preload ring into the outer preload ring. When this has occurred, the nut or bolt is properly tightened (see figure 8-30).

(1) Installation of preload washer on stud. To install preload washers on a stud, see figure 8-31 and proceed as follows:

(a) Install plain washer.

(b) Install inner preload washer.

(c) Install outer preload washer.

(d) Install plain washer.

(2) Installation of preload washer on a bolt. To install preload washers on a bolt, see figure 8-32.

(3) Tightening. To tighten preload washers on a stud or a bolt, see figure 8-33 and proceed as follows:

NOTE

An aircraft inspector or supervisor may be required to be present during tightening of the preload indicating washers to verify that the preload washer has been properly tightened.

(a) Place a ratchet handle wrench with socket on the nut.

(b) Place a scribe in one of the preload indicating outer ring holes.

(c) Move the preload ring with the scribe and tighten the nut. As soon as the preload washer can no

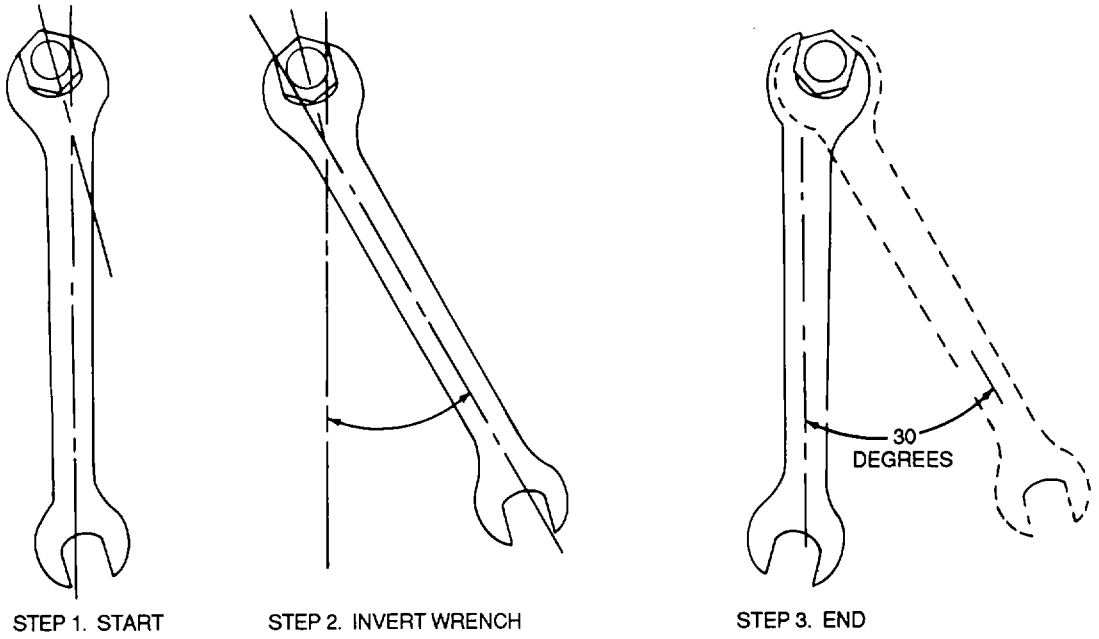

Figure 8-27. Tightening to 30-Degree Wrench Arc

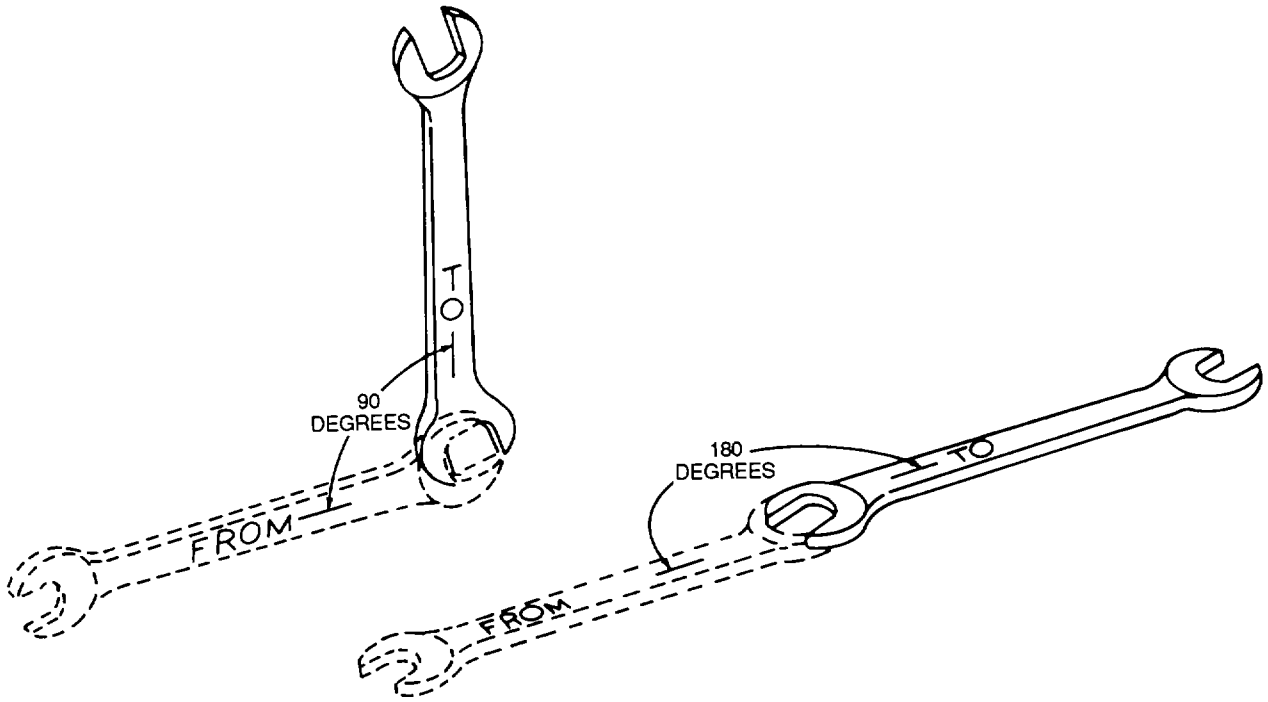

Figure 8-28. Tightening to 90- or 180-Degree Wrench Arc

longer be move with the scribe, stop tightening the nut. The proper load (or torque) has been reached.

(d) The tightening procedure is the same whether the preload washer is used on a stud or with a bolt.

bolt.

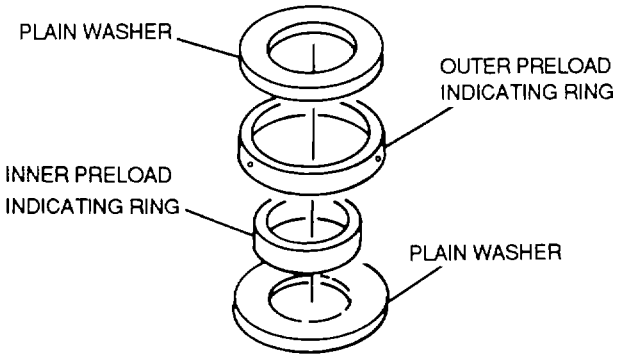

Figure 8-29. Preload Indicating Washers

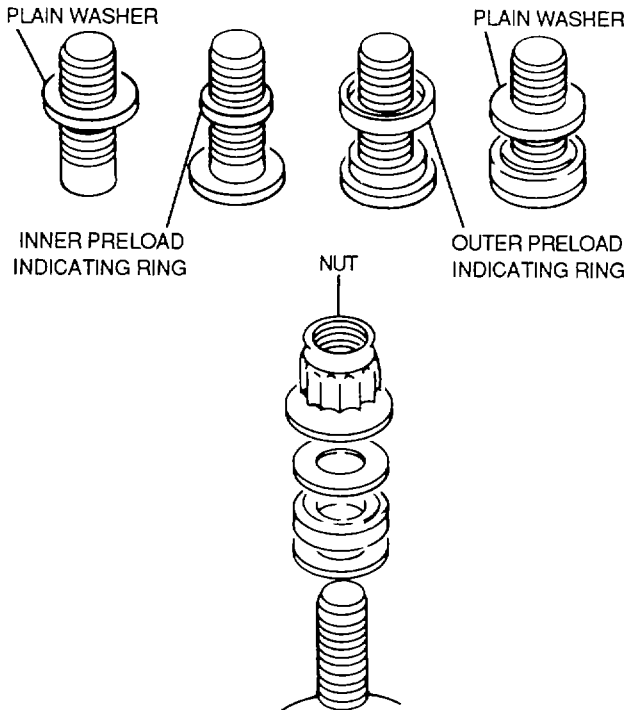

Figure 8-31. Installation of Preload Washers on a Stud

Washers on a Stud

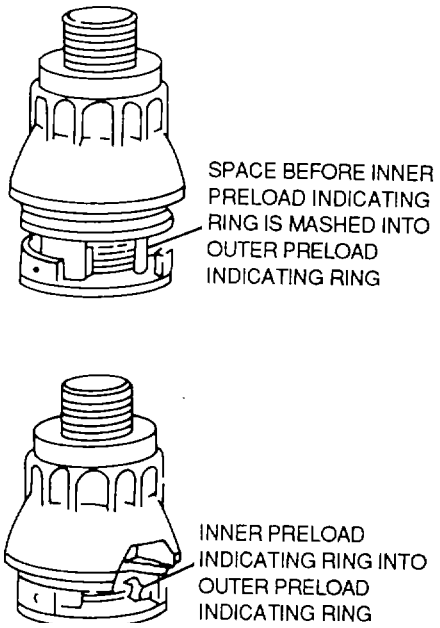

Figure 8-30. Action of Preload Indicating Washers

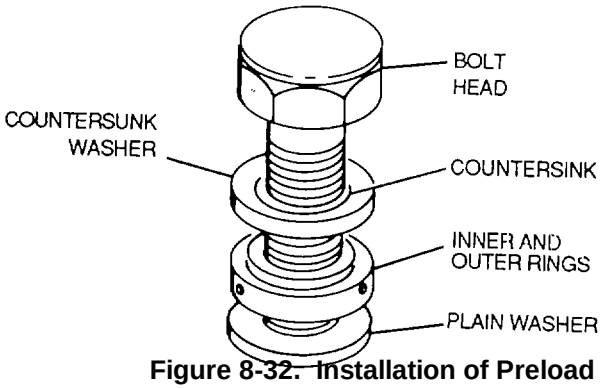

Figure 8-32. Installation of Preload Washer on a Bolt

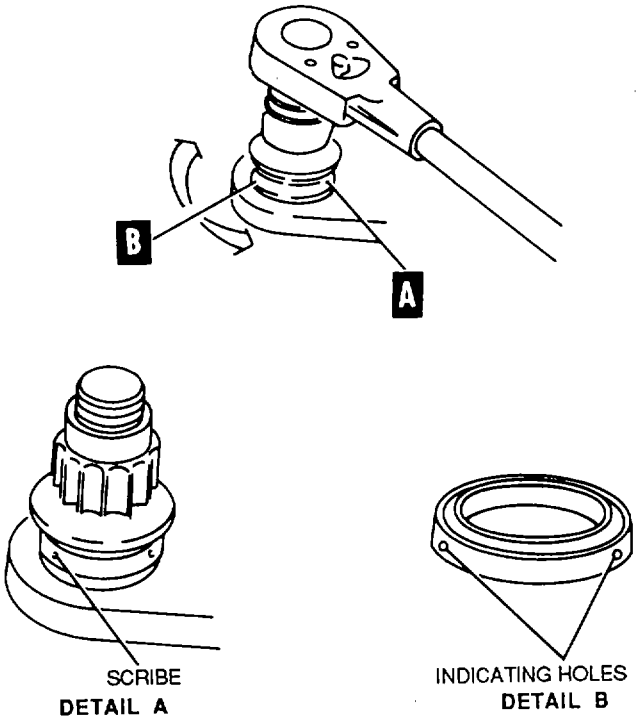

Figure 8-33. Tightening Preload Washers

CHAPTER 9

GROUND SUPPORT EQUIPMENT

9-1. General. This chapter will familiarize all personnel with equipment used to support aircraft maintenance. Practices and procedures in this chapter are relative to common types of ground support equipment used by the Department of the Army. General information contained herein should be used as a guide for inspection and maintenance of ground support equipment. For operational and maintenance instructions on a particular piece of equipment, consult the applicable operation and service instructions manual.

a. Inspection. The various types of inspections in this chapter are a general guide for maintaining ground support in a serviceable condition. The most common type inspection performed by using organizations are daily and periodic inspections. The regularity with which these inspections are performed is determined by frequency of operation and conditions under which the equipment is operated.

b. Maintenance. Maintenance requirements out-lined in this chapter provide the reader with a general overall picture of maintaining operable ground support equipment. To obtain the highest degree of serviceability, equipment should be kept clean, and scheduled maintenance performed as necessary.

9-2. Safety Practices and Procedures. The shop safety practices and procedures outlined in Chapter 2, paragraph 2-8, also apply to ground support equipment. However, there are hazards associated with painting ground support equipment that require special safety measures. These are described in the following paragraphs.

CAUTION

Federal and state environmental regulations are applicable to all chemicals used in painting processes. Precautionary measures shall be taken to prevent paint and paint removal waste from contaminating lakes and streams. Some of the chemicals utilized for painting and paint removal require treatment or other special control prior to disposal. Disposal of materials shall be accomplished under the direction of the installation facility engineer and MEDDAC Health and Environment Activity in accordance with applicable directives, and in a manner that will not result in violation of local, state and federal pollution criteria. Guidelines for disposal are cited in AR 200-1.

WARNING

All painting personnel shall take all requisite safety precautions with regard to toxicity and other health hazards, and flammability hazards in accordance with existing instructions and regulations. All safety precautions regarding personnel health, fire prevention, ventilation, handling of equipment, electrical grounding, storage of coatings, area preparation, use of vapor proof lights, etc., are mandatory.

a. Safety and Health Aspects of Painting. Painting operations present hazards that require control or preventive measures. Vapors produced, particularly in spray painting, are highly flammable, as are the accumulated dried coatings deposited on walls, floors and equipment in painting areas. Coatings and their thinners very often contain toxic substances which are injurious to health by inhalation and, to a less degree, by physical contact. Painting operations also involve hazards resulting from the improper use of work stands, ladders, hoists, etc.

WARNING

- The following measures are minimum requirements for personal safety:

- Wear protective clothing to prevent contamination of ordinary clothing.

- Aprons and clothing that become saturated with paint should not be worn in shop. Saturated clothing shall not be hung in lockers or other similar confined spaces that might induce spontaneous combustion.

- All personnel should wear non-sparking shoes, which are free from metal nails in soles and heels.

- Full skin covers, i.e., gloves or skin protective creams shall be applied to exposed skin areas prior to painting to guard against injurious effects of paints, and to allow ready removal of paints by washing the area with water. Skin areas shall be clean and dry before cream is applied.

- Personnel engaged in stripping or cleaning with methylethylketone (MEK), acetone or toluene and the spray application of paints shall wear protective clothing and approved organic vapor cartridge respirator approved by the Operational Safety and Health Administration (OSHA). Paint respirator shall be worn during all spray painting operations.

- Spray paint only when adequate exhaust or general ventilation is available.

- Personnel having histories of skin or respiratory ailments should be excluded from paint crews applying two component polyurethane or epoxy paints. When there is doubt, appropriate medical tests must be administered.

- Individuals who engage in mixing and applying plural component paints containing isocyanates will be subjected to appropriate pre-placement surveillance and periodic job related medical tests.

- All indoor spray painting shall be accomplished in a vehicular paint spray room equipped with spray booths having a minimum face air velocity of 120 feet per minute.

- Preparations containing benzene (benzol), Federal Specification ASTM D 836, will not be used for spraying. Inhalation of these fumes is extremely injurious to health.

- Never use flammable solvents to clean walls of spray booths or any part of equipment.

- Smoking is prohibited in paint shop. Mist from spray gun is highly flammable and spark or flame of any type will cause it to flash or explode.

- Accumulations of paint spray dust in spray booths, and in cracks and corners of the paint shop, are both hazardous and undesirable. Accumulations of paint spray dust are highly flammable and thick coatings are subject to spontaneous combustion. Dust may also cause deposits on newly painted surfaces when exposed to sudden drafts. To eliminate these conditions, paint shops must be kept clean. Walls of paint shops and paint spray booths should be covered with booth plastic which should be replaced when dirty. Paint or paint residue removed from booth shall be taken from building and safely disposed of immediately.

- Keep dirty rags and paper refuse in separate metal containers with self-closing lids and appropriate markings. Remove and dispose of contents at end of each operating shift.

- Keep all authorized supplies of paint, thinners, etc., in paint room in metal cabinets with vent holes to prevent accumulation of vapors. Keep thinners, solvents, and other highly volatile flammable agents in approved safety cans.

- Keep all paint spraying equipment clean, and inspect frequently to ensure that serviceable condition is maintained.

- Frequent inspections of electrical equipment shall be made by qualified electricians to ensure proper operation and to eliminate fire hazards caused by short circuits, defective electric switches, or improper maintenance.

- Personnel engaged in acid or caustic cleaning operations shall wear rubber gloves, aprons, boots, goggles, and approved protective equipment.

- No acid or other oxidizing agents shall be permitted in paint room or stored where they might contact painting supplies.

- Certain paint solvents and pigments may cause dermatitis on coming in contact with the skin. Some solvents may penetrate skin, or may be inhaled as vapors, and lead to systemic poisoning. Care must be taken to avoid skin contact or breathing vapors to avoid systemic poisoning.

b. Fire Precautions. Most paints contain highly flammable constituents, which, under suitable conditions, can form explosive mixtures with air. As a result, the following precautions shall be taken:

- Electric motors used to drive exhaust fans or other equipment in storage places shall be of the type approved for explosive atmospheres. If such motors are not available, substitutes shall be located outside the room or building. Motor housings, fan frames, and the like shall be properly, grounded to prevent possible static sparks, and all electric wiring shall be enclosed in conduits.

- All electric light bulbs used within storage area shall be enclosed in vapor-proof globes, mounted in keyless sockets.

- Motor starting devices and switches in all electrical circuits, if not of the explosive-proof type and approved by an established underwriter, shall be located outside room or building to prevent fire hazards from flammable vapors.

- Tools used to open containers shall be nonspark producing types. All electrically-driven portable tools used in this area shall be explosion proof and properly grounded.

- Ample fire extinguishers of the form, dry chemical, or carbon dioxide type will be provided.

9-3. Painting Requirements. Ground support equipment is painted primarily for protection against rust and corrosion. Other considerations include camouflage or organization identification.

a. General. The safety precautions and shop practices given in Chapter 2 will be adhered to during the repainting of ground support equipment. Procedures for preparation and application of paint on various surfaces are covered in a general nature in paragraphs 9-3 through 9-5. All ground support equipment when painted or repainted will be top coated with MIL-C-46168 coating, Aliphatic Polyurethane, Chemical Agent Resistant. Conditions which warrant painting of ground support equipment are as follows:

(1) All ground support equipment having a top coat other than MIL-C-46168, Coating, Aliphatic Polyurethane, Chemical Agent Resistant, will be converted to MIL-C-46168 when it is determined that inadequate protection is afforded against rust or corrosion and not merely painted to convert to MIL-C-46168 top coat.

(2) Spot paint any areas that require touchup with the same topcoat that is applied to the ground support equipment in lieu of complete refinishing, provided that not more than 25 percent of the entire surface is affected.

(3) Immediately spot paint any areas which have become bare and exposed due to deterioration of the topcoat or an accident to provide protection and prevent further deterioration.

b. Authorized Colors. The authorized colors for various categories of equipment are specified in the following paragraphs.

(1) Ground support equipment. Ground Support Equipment (GSE) will be top coated with Green 34094, per MIL-C-46168, except for those items in table 9-1. The equipment in table 9-1 will be painted with the three color camouflage pattern in accordance with TM 43-0139, Painting Instruction for Army Material. Small pieces of GSE such as optical test equipment may be painted Lusterless Black, No. 37038, per MIL-C-46168. GSE utilized by TDA units in non-tactical locations such as permanent airfields in continental United States when safety is the prime factor may be painted Yellow, No. 33538, per TT-E-527.

(2) Engines, engine accessories, and components. Paint engines, engine accessories and components where temperatures are below 350°F (177°C) and exposed to exhaust gases, corrosive fluids, and areas known to be subject to corrosive attacks and temperatures do not exceed 350°F (177°C). Apply two coats of Green 34094, per MIL-C- 46168. Do not paint air-cooled engine cylinder fins. Paint engine exhaust manifolds with Enamel, Heat Resisting, Black, No. 17038 per TT-E-496.

Table 9-1. GSE - Three Color Camouflage Pattern

Nomenclature	NSN	LIN No.
Aviation Ground Power Unit (AGPU)	1730-01-144-1897	P44627
MD3 Generator	6115-00-843-8501	J40698
Hydraulic Test Stand	4920-00-904-9612 4920-00-738-6588 4920-00-882-6401 4920-00-832-5491 4920-00-144-5581 4920-00-573-61 68 4920-01-119-8795 4920-01-173-5812 4920-01-173-5813	W00221
Shelter, Air Mobile	4920-00-900-8378 4920-00-900-8377 4920-00-950-9141 4920-00-849-4102 4920-00-477-2065 4920-00-169-6092 4920-00-148-7448	96176

NOTE

Paint exhaust manifold only during overhaul or when processing equipment for storage.

(3) Battery compartments. Battery compartments should be neutralized, surface stripped, and cleaned prior to painting.

(a) Neutralization of acid electrolyte. Exercise care to prevent acid from spreading to adjacent areas. Wash areas affected by battery acid with 20 percent solution of sodium bicarbonate, Federal Specification O-S-576, in water. Neutralization is completed when bubbling ceases. After neutralization, remove all traces of sodium bicarbonate solution with generous quantities of water to prevent corrosion.

(b) Neutralization of alkaline electrolyte. Exercise caution to prevent acid from spreading to adjacent areas. Wash areas affected by electrolyte with 3 percent solution of boric acid in water. Neutralization is completed when bubbling ceases. After neutralization, remove all traces of boric acid with generous quantities of water.

(c) Treatment after neutralization. Treat affected area by swabbing with 5 percent solution of chromic acid, Federal Specification O-C-303, or 5 percent of potassium dichromate, Federal Specification O-P-559. Follow by flushing with water, thorough drying and mechanical stripping of any areas that may require stripping. Thoroughly clean and dry the affected area in accordance with TM 55-1500-333-24.

(d) Painting. After neutralization, stripping and cleaning, apply the following paint system:

1 Apply two coats of epoxy polyamide primer, MIL-P-23377, type 1 or MIL-P-85582.

2 Apply over these coats one coat of primer coating epoxy, MIL-P-52192.

NOTE

MIL-P-23377 is yellow, MIL-P-85582 is green and MIL-P-52192 is red. When wear, scratching or topcoat damage occurs, yellow, green, or red primer undercoats will expose, indicating that repainting is necessary. This is essential to protect the substrate structures.

3 Apply a topcoat of Lacquer, Acid Resistant for Aluminum, Federal Specification TT-L-54, or Varnish, Asphalt, Federal Specification TT-V-51, for other than aluminum substrates.

WARNING

- Military Specification MIL-R-81294 may be used on aluminum or magnesium substrates. MIL-R-81294 remover contains highly volatile methylene chloride as a constituent. Its vapors are hazardous to breathe and/or will cause skin burns. Although methylene chloride is not flammable, other constituents are. When the blanketing effect of methylene chloride is lost through its volatility, the remaining constituents may, under certain conditions, become ignitable.

- Any paint remover on the skin or in the eyes must be flushed immediately and thoroughly with water. In addition, medical treatment should be sought promptly in the case of contact with eyes.

- Protective clothing and equipment such as rubber gloves, aprons, boots, approved organic vapor cartridge respirators (TB MED 223 and supplement to Table 11, TB MED 223), appropriate eye shields and goggles shall be used as necessary to provide adequate protection for personnel.

- The painting operation should be reviewed by the installation safety office and MEDDAC Health and Environment Activity to determine the presence of any operational hazards and to make recommendations for either eliminating or controlling those hazards found.

c. Cleaning and Stripping of Surfaces. The only chemical paint remover authorized for use on ground support equipment surfaces is MIL-R-81294. Other chemical removers cannot be used unless authorized by AMSAV-EIG.

WARNING

- Avoid contamination of lakes and streams, with paint and paint removal waste. Some of the chemicals utilized for painting and paint removal require treatment or other special control prior to disposal.

- Disposal of materials shall be accomplished under the direction of the installation facility engineer and MEDDAC Health and Environment Activity in accordance with applicable directive, and in a manner that will not result in violation of local, state, and federal pollution criteria. Guidelines for disposal are cited in AR 200-1 and TM 5-814-6.

(1) General preparations. The following actions will prepare the equipment for cleaning and stripping:

- Place equipment on a wash rack, preferably in shaded area, attach a static ground.

- For best results, ambient temperature should be approximately between 50 and 100°F (10 and 37°C). Do not attempt to accomplish paint removal in rain, or on surfaces which are not dry.

- When painted surface is exceptionally dirty or coated with fuel, oil, grease, mud or other foreign matter, clean in accordance with TM 55-1500-333-24 before applying remover.

- After equipment has been cleaned, allow sufficient time for surfaces and crevices to dry thoroughly. Water remaining on surfaces and in crevices has a detrimental effect on paint removers.

(2) Chemical Removal from Metals. The use of MIL-R-81924 paint remover is described in the following paragraphs.

WARNING

Prolonged breathing of remover fumes must be avoided as serious health problems may result. Use only in well ventilated areas.

NOTE

Removers must be well mixed before use as they tend to segregate on standing. Do this by agitating with a wooden paddle if mechanical mixers are not available. Rolling a drum will not mix its content very effectively. At temperatures below 600F, the removal power of removers will be noticeably slower than at higher temperatures.

(3) Applying removers. Beginning at the highest point of any vertical or sloping surface, apply a coat of remover with a suitable brush. Barrel pump and spray gun may be used for application of removers. In no case should the spray be highly atomized. Agitate with a stiff fiber brush, if necessary, to loosen paint. A wet film of remover should be maintained on the surface being stripped to obtain efficient removal. This may require additional application of the remover. Areas should be treated progressively, kept wet, and allowed sufficient time for the stripping action. Best results are obtained by applying removers in shaded areas since sunlight dries the remover quickly.

(4) Painted surfaces. Enamel surfaces should wrinkle within 5 to 15 minutes after application. Most surfaces with lacquer or polyurethane paint will not wrinkle but will merely be softened by the remover; allow remover to remain 8 to 20 minutes, keeping a wet surface by applying another coat of remover if necessary.

NOTE

Zinc chromate primed surface, where topcoat material has not been applied, should be washed down as soon as possible after initial loosening of primer. If the surface becomes dry, another application of remover is required since zinc chromate tends to become redeposited on the surface.

(5) Cleanup of stripped surfaces. Flush the stripped surfaces, using warm water at 150 to 250 psi maximum. If high pressure warm water is not available, cold water at usual hydrant pressure may be used. This will require a longer time to accomplish the washing.

Lifted paint will be flushed by starting at the bottom and working upward, keeping the flushing liquids, off the unwashed parts. After flushing thoroughly, continue cleaning in accordance with TM 55-1500-333-24. Tape and loosened paint may be removed by hand or by using water under pressure.

(6) *Stripping in Confined Locations*. On occasion, it may be impractical to use emulsified paint remover because of complexities of assembly and rinsing difficulties. In these cases, remove acrylic paint with solvent materials such as ethyl acetate, Federal Specification TT-E-751, lacquer thinner, Federal Specification TT-T-266, or dichloromethane, Military Specification MIL-D-6998. Remove polyurethane paint by mechanical means.

WARNING

Prolonged breathing of solvent fumes must be avoided as serious health problems may result. Use only in well ventilated areas.

1 Application of solvents. After appropriate masking, apply solvents with soft bristle brush or clean cloth. Allow solvent to remain on surface until paint has softened and lifted. To keep the area wet with solvent, it may be necessary to keep a cloth on the surface and keep the cloth saturated with solvent.

2 Removal of solvents. Wipe all of the solvent away with a clean damp cloth, frequently rinsing cloth in clean water. Repeat steps (1) through (3) in paragraph d as necessary until all paint and residue have been removed from metal surface including recesses and around rivets, bolts, etc. Wipe clean and dry with clean, lint-free cloth, Federal Specification CCC-C-46.

(7). Special Conditions. Where difficulty is encountered on magnesium surfaces, paint may be removed by following instructions in Military Specification MIL-M-3171.

d. Mechanical Removal from Metals. Mechanical removal of paints is recommended on non-clad aluminum alloys, steel, copper, and titanium where chemical removal would be impractical because of structural complexities or rinsing difficulties.

(1) Aluminum and aluminum alloys. The mechanical removal method is recommended on all non-clad aluminum alloys. Procedures are as follows:

(a) Remove paint from non-clad aluminum alloy extrusions, tubing, and ducts with an abrasive nylon mat, MIL-A-9962; Aluminum wool, FF-W-1825, or Federal Specification P-P-101, No. 400, abrasive paper. Do not use steel wool.

WARNING

The use of goggles or face shield is mandatory since paint particles can break loose and fly off.

CAUTION

Do not use steel brush or steel wool on aluminum surfaces. Metal particles will be- come embedded in the aluminum, causing corrosion by galvanic action between dissimilar metals.

(b) A hand-operated, air-powered, drill motor with rotary brass wire brush or abrasive flap brush may be used on heavy structural non-clad aluminum alloys.

(c) Wipe area with clean damp cloth followed by wiping dry, with a clean, dry, lint-free cloth. Areas may be blown with warm, oil-free air or gaseous nitrogen.

(2) Stainless steel. Normally stainless steel parts are not painted. However, if paint is present, it may be necessary to remove it before recoating or prior to corrosion removal using the following procedures:

WARNING

The use of goggles or face shield is mandatory when using motor driven brushes.

(a) Mechanical methods include abrasive blasting, grinding, and wire brushing. (Obviously, the severe abrasive action of abrasive blasting or grinding cannot be used to remove paint from thin wall items). Do not use common steel wool or wire brushes on stainless steel. Wire particles may become embedded in the surface and may later corrode. Use only stainless steel wool or wire brushes. Nonmetallic abrasive such as clean silica sand shall be used for abrasive blasting.

(b) After completing mechanical removal, polish the surface first with Aluminum Oxide, Abrasive Cloth P-C-451, grit size 80 and finish with grit size 240.

(3) Copper and copper base alloys. Mechanical removal of paint is recommended on copper and copper alloys where chemical removal would be impractical because of structural complexities and rinsing difficulties. Proceed as follows:

WARNING

Drycleaning solvent is flammable and solvent vapors are toxic. Use P-D-680, Type II Solvent in a well-ventilated area. Keep away from open flames. Avoid prolonged solvent contact with skin.

(a) Remove oil, grease, and dirt with dry-cleaning solvent, Federal Specification P-D-680, dichloromethane, MIL-D-6998, or trichloroethane, Federal Specification O-T-620.

(b) Remove paint with brass wire brush or 400 grit abrasive paper. Sand blast with extremely fine grit if necessary.

NOTE

Do not sand blast braided copper flexible lines.

(c) Remove loose particles of paint with bristle brush. Wipe area with cloth, moistened with trichloroethane, Federal Specification 0-T-620.

e. Surfaces to be painted will be cleaned prior to painting and prior to the application of the chemical treatment process or processes listed in TM 55-1500-333-24. Cleanness is determined by the following steps:

(1) The water break test is a method of evaluating the degree of cleanliness of a metal surface. It is based on the ability of a clean surface to sustain an unbroken film of water. Test representative areas of the surface to be painted by projecting distilled water on it using an atomizing device such as a nasal atomizer. Do not use a paint sprayer for this pulse as the excessive pressure will defeat this test. Read results as follows:

- If water gathers into separate droplets within 25 seconds (that is, if the surface shows a water break) the surface has failed the cleanliness test.
- If, on the other hand, the water suddenly flashes out into a film over a large area, an impurity such as alkali detergent, etc., is on the surface and it has failed the test.
- If the water merges into a continuous film without a sudden flashout, the surface has passed the water break test.

(2) Insufficient rising after cleaning may leave an unacceptable surface. For best adhesion of coatings, metallic surfaces should give either a neutral or a slightly acid reaction when alkaline cleaners are used. Moistened red litmus paper, when applied to surface, shall not react by turning blue. If such color changes occur, apply a 0.20 to 0.25 percent chromic acid O-C-303 solution until a piece of blue litmus paper applied to the treated surface turns red, which indicates an acid surface. Permit the acid solution to remain on the surface from two to five minutes. Follow with a water rinse and then wipe dry with clean, lint-free cloths.

(3) Determine whether the surface has appropriate surface treatment in accordance with TM 43-0105.

(4) When a special solvent cleaning requirement exists in painting operations, use a hand solvent wipedown consisting of 50 percent toluene, Federal Specification TT-T-548 and 50 percent methyl ethyl ketone, Federal Specification TT-M-261. Additionally, each time the painting sequence of equipment is broken overnight or longer, this same procedure shall be performed immediately prior to application of further coats to insure cleanliness and proper paintability of the surface.

(5) Examine for presence of corrosion or foreign matter retained in seams and crevices, etc., and for oily films or deposits which may have accumulated after cleaning. If any of these are present, remove or treat as directed in TM 43-0105.

(6) Assure that all metal surfaces and all seams and crevices are dry prior to application of paint. Pressurized filtered air may be used to dry these areas.

(7) Nonmetallic surfaces should be dry, free of contamination; all pores sealed and scuff sanded with an abrasive nylon mat in accordance with MIL-A-9962.

f. Pretreatment and Sealing of Bare Metal Surfaces The following paragraphs describe treatment requirements for aluminum, magnesium, copper and steel.

(1) Aluminum bare metal areas will be alodine treated per MIL-C-5541, Classes 1 or 2, prior to applying the first primer.

(2) Bare magnesium metal areas will be dichromate treated per MIL-M-3171, Type 6, prior to applying the first primer.

NOTE

Paint will not bond to the brown powdery surface of excessively treated magnesium or aluminum, nor will paint bond to treated aluminum surfaces which are too dark.

(3) Steel substrates will be treated with zinc phosphate per TT-C-490, Type I, prior to applying the first primer.

(4) All missing or deteriorated skin sealant will be replaced using MIL-S-81733, Type II, Class B, sealing compound.

(5) Copper and copper base alloys are quite resistant to atmospheric corrosion. Protective coatings are seldom required because of the inherent resistance of the metal. Corrosion attack on such components will usually be limited to staining and tarnish. Generally such change in surface conditions is not dangerous and should ordinarily have no effect on the function of the part. See TM 55-1500-344-23. Paint finishes may be applied for decorative purposes.

g. *Mating Surfaces*. The use of primers on similar and dissimilar metal mating surfaces and on attaching parts is presented in the following paragraphs.

(1) Application on similar metals. All seams in which the mating (faying) surfaces are similar metals will be protected by applying two coats of primer to each surface being joined. Welded faying surfaces shall not be primed prior to assembly. Faying surfaces that are to be adhesively bonded will be surface treated and processed as specified in the approved bonding procedures prescribed for the assemblies concerned. In addition to the required primer coatings, faying surfaces of magnesium alloys will be filled with an approved sealing compound.

(2) Application on dissimilar metals. Each surface to be joined will receive a minimum to two coats of the appropriate primer, and, in addition, the following precautions will be taken:

(a) Where magnesium is one of the metals of dissimilar metal faying surfaces, the metals will be separated by use of an approved barrier tape. The tape will extend not less than 1/4 inch beyond the joint edges to prevent moisture from bridging between the dissimilar metals. Sealing compounds conforming to MIL-S-81733 be used as moisture barriers in lieu of tape and when used, the sealing compound will be applied between the surfaces and squeezed out of all boundaries and the excess removed in a manner that will fillet all edges. The fillet width will be not less than 1/4 inch. Joint areas which would retain water will be filled with a sealing compound conforming to MIL-S-81733 or MIL-S-7124. When the use of a barrier tape or sealing compound is impractical because of mechanical or other factors, a primed 5356 aluminum alloy shim extending 1/4 inch will be used in lieu of the tape or sealing compound.

(b) Butt joints consisting of a riveted magnesium sheet and a riveted dissimilar metal sheet will be protected by grooving the seam to a width of not less than 1/8 inch and filling with sealing compound conforming with MIL-S-81733. The depth of the groove will be sufficient to retain the sealing compound conforming to MIL-S-81733, which will be subsequently applied and smoothed flush with the surfaces of adjacent dissimilar metals.

(c) Butt joints consisting of a magnesium sheet and a dissimilar metal sheet, neither of which is secured by mechanical means other than riveting, will be protected by use of an approved adhesive barrier tape or a primed 5052 aluminum alloy foil which covers the cut ends of either or both dissimilar metal sheets and extends not less than 1/4 inch beyond the joint edge.

(d) Organic adhesive barrier tapes or metal foils will not be used on exterior surfaces.

(3) Attaching parts. Parts, such as nuts, bushings, spacers, washers, rivets, high shear rivets, screws, self-tapping screws, sleeves for shakeproof fastener studs, self-locking nuts, speed nuts, clamps, and the like, do not need to be painted in detail except when dissimilar metals or wood contacts are involved in the parts being joined. Such parts will receive a coat of epoxy primer, MIL-P-23377 (wet or dry, at installation). Rivets (5056) in magnesium alloy need not be installed with epoxy primer. For magnesium dissimilar combinations, follow the general requirements. Close tolerance bolts passing through dissimilar metals will be coated before installation with a zinc chromate compound conforming to MIL-C-11796, Class 3, MIL- C-16173, Grade I, or a wet epoxy primer in accordance with MIL-P-23377. Aluminum alloy washers (5356) of suitable

design will be used under machine screws, countersunk fasteners, boltheads, and nuts that would otherwise contact magnesium.

h. *Masking*. Masking of specific areas is required in painting operations on large assemblies or structures either for protective reasons, as in the precautionary note below, or for purposes of delineation. Masking conditions are as follows:

NOTE

Care should be taken to ensure that paint is not applied to certain surfaces where paint will interfere with a function. The following should be masked or otherwise protected during painting: machined surfaces that move with respect to each other such as threads, slip rods, bearing contacts and gear teeth; electrical parts, such as contacts, relays, insulators, sockets, plugs, connector, wiring and terminals; plastic and rubber (natural and synthetic) mounts, spacers, etc., and lubrication fittings, cups, oil holes, etc.

(1) Mask areas such as windows large openings, etc., with combinations of barrier papers:

- Military Specification MIL-B-121, usually a treated paper which is oil and moisture resistant.

- Military Specification MIL-B-131, usually a laminated toil and cloth or foil and paper with good water vapor resistance.

NOTE

Both types above are heat sealable.

- Crepe backed paper masking tape, MIL-T-21595, Type I.

(2) Cover small or irregularly shaped parts with tape alone.

(3) In repetitive spraying of the same or similar structures, it is advisable to have available predesign bandages, socks, etc., of barrier paper or cloth.

(4) Avoid using tape in such a way as to leave a paint edge on surfaces unless feathering by sanding can be done safely.

(5) Use only approved masking tapes in varying widths required by the job. A complex or curved area is better masked initially at the paint edges with nanow (1/2 inch) tape. Wider tape may then be applied over the narrow, if required.

(6) Use only approved masking paper for large area masking. Coating solvents may dissolve and deposit printing ink from newspapers, etc., on the surface of the area being masked.

(7) When spray painting, mask or cover surfaces at a distance from the area being painted which might receive overspray or paint drift.

(8) Masking tapes should be removed as soon as possible after coating application.

(9) Press tape firmly at the masking edge when applying it to prevent paint bleeding under it by capillary action.

i. *Application Equipment*. Application systems and components of application equipment are described in the following paragraphs.

(1) Application systems. The application equipment plays a key role in the overall success of painting equipment and components. Selection of application systems and care thereafter are essential (robotics) or a manual type. No description or details are provided herein because of the wide variances between equipment manufacturers and local conditions. Each manufacturer's instructions and other details must be consulted. Special consideration should be given equipment with which plural components are to be applied. Problems may be encountered, i.e., required accuracy of mixtures, pot life of mixtures and effects resulting from non-adherence to prescribed application procedures.

(2) *Components of application equipment*. The following paragraphs describe application equipment.

(a) *Automated systems (robots).* Such systems include, but are not limited to, metering and mixing equipment, air compressors, air cleaners, electrostatic generators, spray booths, feed lines and tanks, regulators, and computerized automated components.

CAUTION

Hoses should always be thoroughly cleaned by purging and flushing with solvent appropriate to the coating material used. When the material is a catalytic system (epoxy or polyurethane), this must be done immediately after use and before the prescribed pot life limit has been reached to prevent the material from gelling in the system.

(b) Hoses. Because of friction losses in hose, it is essential that the proper sizes be used. Do not use hoses longer than 50 feet except in the case of high pressure air hoses leading to the regulator or tank. Extra lengths of hose may be attached for this use but should be removed when no longer needed . The high pressure air hose should have a minimum inside diameter of 7/16 inch. No less than 3/8 inch I D fluid hose should be used from the tank to the gun and no less than 5/16 ID air hose from the regulator to the tank and from the tank to the gun. Any reduction in size or increase in length from the forestated may produce unsatisfactory results. Air and paint hoses are furnished in various standard lengths. Determine the length required for use in a spray booth measuring the width of the booth and add two feet for the total required length of the hose.

(c) Spray guns for manual applications. MIL-C-46168 paints shall be applied only in approved and qualified facilities. No application of MIL-C-46168 shall be accomplished in open air.

(d) Paint booths and application equipment. No description or details is provided for painting facilities due to the variance of equipment and local conditions. For automated robotic equipment, manufacturer's instructions should be consulted.

(e) Paint brushes. Paint brushes should be used during touchup procedures in open air when applying MIL-C-46168 paint. Consult paragraph 9-3p on touchup procedures for details.

j. Primers. Primers and their uses are described in the paragraphs that follow.

(1) General use. Primers are used on metals to provide a coating to which subsequent coatings will firmly adhere and provide protection for the substrate metal against corrosion. The pigment portion of primers for ferrous base metals usually consists of iron oxide, lead chromate, red lead, zinc chromate, zinc oxide, zinc dust, or a mixture of these. Zinc olstrontium chromate is the pigment in some primers used on substrates of magnesium, aluminum and their alloys. Other primers which are lead and chromate free are desirable for most applications and required in applications where lead and zinc chromate are prohibited.

(2) Use on ground support equipment. Primers are used as corrosion inhibiting coatings on metal surfaces to inhibit corrosion and provide good adhesion for the topcoat. Primers will conform to MIL-P-23377 or MIL-P-85582.

(3) MIL-P-23377 primer. This is an epoxy polyamide primer furnished as a two component kit wherein the two components are mixed prior to use. It is intended for application to clean aluminum and magnesium substrates. One component contains the pigment, mixed in an epoxy vehicle, while the other component consists of a clear polyamide solution which functions as a hardener for the epoxy resin. These components are packaged separately and have excellent storage stability. When mixed, storage pot life is eight hours. Only that amount which can be used in an eight hour period should be mixed.

(4) MIL-P-85582 primer. MIL-P-85582 primer is a water reducible, multicomponent, epoxy type, chemical and solvent resistant primer coating. The primer is intended for use on metal surfaces as a corrosive inhibitive, chemical resistant, strippable, epoxy primer that is equivalent to MIL-P-23377 primer and compatible with MIL-C-85285, MIL-C-46168 and MIL-C-83286 polyurethane topcoats. Type II primer is intended for use where low infrared reflectance is required.

k. Opening of Containers. Containers must be opened slowly to allow the pressure to escape before completely removing the seal.

WARNING

- Containers of paint may develop internal pressure during storage and should be opened cautiously. Failure to follow this procedure may result in paint being spattered in the eyes and surrounding areas.

- Respirator must be worn. Fumes generated can cause sickness or permanent damage if exposure is prolonged.

(1) Open containers, sealed with bungs, by slowly turning bung out until a hissing sound is heard. When hissing stops (an indication that pressure in and out of drum is equal) completely remove bung.

CAUTION

Use a fine, non-spark producing tool and a soft head hammer (rubber or plastic, to puncture drum.

(2) Containers which are bulged or distorted due to internal pressure shall have a small hole punctured in top to release pressure. After pressure is released, container may be opened in usual manner.

l. *Mixing.* Procedures for mixing paints are described in the following paragraphs.

(1) Painting supplies shall be prepared for application under dry and clean conditions with dry and clean equipment.

(2) Paint shops shall be equipped with continuous mechanical paint agitators of suitable capacity. The proper sequence for preparing packaged materials prior to each use is as follows:

(a) Allow paints to come to room temperature.

(b) Remove lids and inspect contents for skinover, gelling, lumps, etc. Skins, if present, shall be carefully removed and discarded, retaining liquids which drain from them. Gelled, lumpy, or otherwise deteriorated paints shall not be used, but properly discarded.

NOTE

Cans of the pigmented component of MILC-46168 paint with non-resealable lids should not be opened and inspected until after the original mechanical agitation, if practical.

(c) Thoroughly agitate all component containers, using a mechanical agitator prior to mixing or thinning and again prior to and during application. Agitation must be continuous during application to assure uniformity of pigment.

(3) Use automatic mixing and proportioning devices, if possible. When automatic equipment, is not available, mix paint as follows:

(a) Break up sediment remaining in original container with a clean wood or metal paddle; stir until a smooth, uniform, heavy paste forms.

(b) Proportion paint in clean mixing container to the four to one ratio specified. (This applies only to MIL-C-46168)

(c) Catalytic action begins immediately on mixing. An eight hour pot life can be anticipated after mixing. Ideally, mixed paint should be used in six hours, to assure the capability for complete system purging and cleaning to preclude equipment damage.

(d) Assure complete mixing when manual mixing is used.

(e) To avoid the possibility of incompatibility of paints under the same specification but of different manufacturers, such paints shall not mixed. Primers and topcoats from different manufacturers, under the same specification, will not be mixed, but may be applied separately to areas which are to be overcoated. Every effort shall be made, however, to assure that an entire topcoat is restricted to the product of a single manufacturer and, where possible, to the same batch in order to maintain uniformity of color, finish, etc.

(f) Application and mixing equipment must be thoroughly purged and cleaned after use.

m. *Thinning.* The following paragraphs describe thinning techniques.

(1) When thinning is necessary, always add thinner to the coating. Adding coating to thinner may result in an irreversible separation or degradation of some of the coating ingredients. Thinner should be added slowly with continual stirring to obtain complete mixing. For all thinning, use only thinners authorized in applicable instructions in this technical manual or pertinent specifications or, in the absence of these instructions, those recommended by the manufacturer. Methyl ethyl ketone, Federal Specification TT-M-261, can be used in cold weather. Other thinners may be needed in hot weather. Reduced coating which has increased in

NOTE

The wrong thinner may destroy certain characteristics of a coating material without immediately giving visual evidence in the wet state.

viscosity due to evaporation will require corrective additions. However, some coatings which undergo chemical processes, such as polymerization to create a film, cannot be thinned beyond a certain point and remain useable; nor can they be brought back to the correct viscosity by thinning after the chemical action has progressed beyond a critical point. This is the case with epoxy and polyurethane.

(2) Thinning shall be controlled by weight, volume, or viscosity measurement to obtain and maintain proper and uniform consistency. If there is no specification covering the coating, thin according to manufacturer's instructions.

NOTE

Do not mix coatings of the same specification but supplied by different manufacturers during application. This will avoid problems of incompatibility in the liquid and curing phases.

(3) Strain all material to be used in spray equipment through clean 60-90 mesh metal strainers in accordance with paint or equipment manufacturer's instructions.

n. *Painting Difficulties and Remedies*. Common painting difficulties and ways to fix them are described in the following paragraphs.

(1) Coating troubles. Coating troubles may be divided into six groups: (1) Inadequate surface preparation (including temperature), (2) incorrect methods or techniques of application, (3) unusual and unsuitable climatic and atmospheric conditions, (4) unsuitable and improperly adjusted equipment, (5) faulty finishing surface or improperly mixed or agitated components and (6) systems not purged of previously mixed materials. An experienced finisher may be capable of adjusting to obtain proper results with faulty materials, but this is an emergency measure only and must be with the cognizance and authority of the quality control facility. The practice is not advised. Incorrect methods of application should be discontinued upon discovery of the discrepancy. Areas painted prior to the discovery of such discrepancies must be inspected and remedial measures taken when necessary. Brushing and roller coating on certain surfaces must be used in confined areas. Remedying incorrect applications, however, also calls for training. The practice of allowing inadequately trained personnel to apply Military Specification MIL-C-46168 coatings is unauthorized and dangerous. Unusual or unsuitable climatic and atmospheric conditions are normally not a problem since manual spray painting must be accomplished in an approved facility which usually compensates for such conditions. Unsuitable or faulty equipment can only be remedied by obtaining proper equipment or repair. TM 55-150034523 shows common troubles of spray coating operations' with suggested remedies or methods of avoidance.

(2) Spray patterns. Faulty spray patterns and suggested corrections are shown in TM 55-1500-34523.

(3) Blushing. Blushing of coatings is the result of water condensation from the atmosphere within, or on, an applied organic film. It occurs when the temperature of the work surface falls below the prevailing dew point. (It shall always be looked for in production coating whenever other than average atmospheric conditions prevail.) It shows as a lighter than normal or bleached discoloration or increased opaqueness of the film. It may occur to the extent that a surface powder develops which can be removed by fingernail or by light rubbing. (Rubbing will not cure the condition.) It may be almost imperceptible, and blushing inducing conditions may escape notice on test panels sprayed prior to production coating due to the temperature differences between test and production environment. Though MIL-C-46168 painted items are not susceptible to water or moisture damage immediately after proper application to items, great care must be taken to avoid surface condensation prior to coating or water induction, in any form, into unmixed components or the mixture prior to or during application. Water will not affect the cure process after proper application. Water will affect paints other than plural component catalytic paints.

o. *Finish Painting*. MIL-C-46168 is the Army standard tactical topcoat for ground support equipment.

(1) Preparation of MIL-C-46168 polyurethane paint. Preparation of this paint is detailed in the following procedures:

(a) Polyurethane, MIL-C-46168 paint is a plural component, low reflective paint formulated to be lead and chromate free. The components of this paint must be thoroughly mixed prior to pouring into the application container when transfer is necessary. Care

should be taken that all of the pigment matter has been included in the mixture.

(b) Mixing requirements for the two component polyurethane paint, when applying by conventional air atomized or airless spray, are to mix four parts of Component A, which is the polyester portion, to one part of Component B, which is the catalyst or isocyanate portion. After the two components are mixed, the total mixture is left to stand for at least 30 minutes to deaerate. The mixture (batch) is then thinned to the proper viscosity depending upon the spray equipment. The mix at the specified ratio will produce a pot life of eight hours. Therefore, no more paint should be mixed than can be used in an eight hour shift or period.

(c) MIL-C-46168 paint must be thinned to spraying viscosity, determined by the user and the type of spraying equipment to be used. A suggested starting point is obtained by mixing approximately four volumes of mixed MIL-C-46168 paint and one volume of MIL-T81772 thinner. The paint must be thoroughly mixed with the thinner and continuously agitated during application.

(d) Where quantities permit, and to eliminate the 30 minute deaeration time and potential waste, plural component spray units can be used which automatically and proportionally mix the two components directly at the spray gun nozzle. Since the two components are kept separate, the pot life consideration is also eliminated.

(e) The polyurethane paint can also be applied by conventional, airless, or electrostatic spray equipment. In cases where this type of equipment is used, the viscosity can change. The applicator should check with the paint company and equipment supplier for the exact criteria for viscosity, thinning and the best application processes.

(f) Whatever spray equipment is used, it is necessary that all spray guns, lines and nozzles, when applicable, be thoroughly cleaned after use to prevent hardening of the coating system. If the coating hardens in the system, the system cannot be cleaned. That portion of the unit in which the paint has gelled or hardened must be discarded.

(g) MIL-C-46168 paint may be applied over a wide range of temperatures. Temperatures from 50 to 90°F (10 to 32°C) are recommended for best results.

NOTE

MIL-C-46168 paint is a catalytic paint and will cure under most atmospheric conditions after application. However, at very low temperature, curing is retarded.

(h) Test the mixture, pressure, and spray equipment settings by applying a test coating to masking paper or similar smooth surfaces prior to application to aircraft or components. Adjust paint and/or equipment until proper test coating is achieved. Paint and equipment are then ready for application to the equipment or components.

(2) Procedures for application of MIL-C-46168 paint to bare metal substrates. The total paint system for the polyurethane coating, as with all other paint systems, requires cleaning, a pretreatment coating, an anticorrosive primer, and the polyurethane topcoat. This applies to painting of bare metal substrates.

(a) Cleaning. The substrate should be thoroughly cleaned of all oil, grease and other contaminants by appropriate methods cited elsewhere herein or as specified in TT-C-490.

(*b) Pretreatments*. Finishing documents, e.g., MIL-STD-193, MIL-STD-186, MIL-T-704, etc., provide appropriate directions for surface preparation. For steel substrates, the pretreatments to use are zinc phosphate per TT-C-490 Type I or wash primer conforming to DOD-P-1 5328. For aluminum substrates, the pretreatment is alodine, MIL-C-5541.

(c) Anticorrosive primers. The anticorrosive primers to be used with the MIL-C-46168 paint system are of the epoxy type. The epoxy primer to use with steel substrates is MIL-P-52192 and for aluminum and magnesium substrates is MIL-P-23377, or MIL-P-85582. MIL-P-53022 may be used on pretreated ferrous substrates if the use of lead or chromates is restricted.

(d) Topcoat. MIL-C-46168 coating is applied at 1.8 to 3.0 mils dry film thickness in two coats. The first coat should be applied within one to four hours of the application of the primer. The second coat may be applied within a few minutes of the first coat or anytime thereafter. The total thickness of the topcoat should not exceed 3.0 mils. There is no maximum time between the application of the first and second coats, ideally within two hours. No surface preparation, except for cleaning, will be necessary as long as the surface

has not become contaminated, e.g., with dirt or grease: MIL-C-46168 coating fully cures in 7 days.

p. *Touchup of Polyurethane System*. Closely inspect candidate areas for extent of damage and/or touchup required. If inspection reveals major paint or primer failure or damage, such as chipped or peeled paint, the involved section should be prepared and touched up. If only minor damage is found, e.g., paint chipped or missing from screw/rivet heads and on outer edges of skin panel(s) the specific area may be prepared and touched up. Prepare damaged area(s) and paint as follows:

NOTE

This must be accomplished with full adherence to provisions of health and safety cited elsewhere and herein.

(1) Thoroughly clean area to be repainted.

(2) Feather edges of coating adjacent to peel section and scuff sand the other area(s) to be coated. Use 280 grit paper or nylon abrasive matting, MIL-A9962, very fine for scuff sanding.

(3) Solvent wipe scuffed area(s) with thinner, MIL-T-19588.

(4) Apply one thin coat of epoxy primer, MILP-23377 on area to be touched up. Power Pak spray unit, MIL-S-22805, may be a valuable aid in accomplishing field touchup.

(5) Apply one full wet coat of thoroughly mixed polyurethane topcoat. If required, apply a second coat after allowing 1 to 4 hours curing period for the first coat.

(6) Touch-up shall be accomplished with brush and rollers only in open areas.

q. *Inspection*. The following tests provide a measure of the quality of the painting job.

(1) *Viscosity test*. See MIL-F-18264.

(2) *Test panel*. Prior to spraying operations, the suitability of materials for the entire system shall be determined experimentally on a panel approximately 10 to 32 inches in size. The panel shall be coated under prevailing conditions with the finish system that is to be applied. If the finish system applied to the experimental panel is satisfactory, full scale operations may begin. Defects found in the experimental application such as blushing, poor adhesion, excessive orange peel, sagging, etc. shall be corrected prior to large scale application.

(3) *Adhesion test*. See MIL-F-18264.

(4) *Gloss test*. Not applicable to MIL-C-46168 paints. See MIL-F-18264.

(5) *Smoothness test*. See MIL-F-18264.

r. *Storage of Painting Supplies*. To prevent fire, spoilage, and waste arising from improper storage and surplus stock, the following precautions shall be observed:

WARNING

- Space heaters or other direct fired heaters shall not be used to heat storage areas. Paints and thinners are flammable.
- Floors should be concrete and drained to one point; drain shall run to sump or detached cistern and have deep trap. The runoff from spilled paint, thinners, or catalysts can cause contamination to soil and water if not properly contained.
- Ventilation shall utilize screened inlets 6 inches above floor and screened vent through roof. Fumes from thinners and catalysts can cause sickness and may be explosive in concentrated amounts.

(1) Paint and thinners shall be stored where possible in dry, fire resistant, well drained and well ventilated structures, preferably separated from other buildings, and under automatic sprinkler protection.

(2) To avoid possible leakage arising from corrosion of containers, protection shall be provided against wetting by rain, snow, steam leaks, or other sources of water.

(3) Supplies shall not be stored in the proximity of steam lines or other sources of heat to avoid direct heat. It is recommended that steam heat be used with coils above stock and screened to prevent contact with drums or containers.

(4) Storage shall not be on floors below grade and first tier of containers shall be laid at least 2 inches above floor level to provide for suitable ventilation and drainage. Sills shall be provided at openings to storage areas, approximately 6 inches above floor.

(5) Paint components and thinners packaged in 55 gallon steel drums may be stored outdoors provided containers are protected against rusting by painting of bare metal areas and are set on dunnage so as to provide approximately 2 inch clearance above ground. Drums stored out of doors shall be laid on their sides to protect loss of markings stencilled on the heads through weathering action of rain, snow, and sun.

(6) Handling of stock shall be conducted in a manner to avoid damage to labels. Relabeling of drums where labels have been obliterated may result in mislabeling, with consequent incorrect use of waste of contents. Drums with obliterated labels should be properly discarded.

(7) Care should be taken to assure protection of the paint or components from moisture. Particular care should be exercised to prevent water entering containers as paint is opened.

(8) Containers of paint shall be readily accessible at all times. Other supplies shall not be stacked on top of paint.

(9) Containers shall be stored and issued in order of dates of manufacture shown on respective labels. Containers bearing oldest date shall be used first. In the event that date of manufacture is not shown on container, date of receipt shall be considered as approximate date of manufacture for purpose of storage and issue.

(10) To give best results, temperature of paint should be between 60 and 85°F (18 and 29°C)at time of use. Storage conditions that result in paint temperatures below 55°F (13°C) or above 95°F (350C) require storage of paint at room temperature for approximately 25 hours prior to use.

(11) In closed containers, temperature and humidity will not affect the stability of either component of two part coatings. Although the paint manufacturers only guarantee two part coatings for one year, both components will remain stable for 2 to 3 years, as long as the component B, the catalyst portion, remains in closed and sealed containers. Where it is necessary to extract a portion of the component B, it should be done in a cool location and the lid resealed as rapidly and as tightly, as possible.

9-4. Reflectorlzing and Checkered Flags. Ground support equipment and vehicles used on the flightline and other areas where aircraft may be must be highly visible for safety. The following paragraphs outline reflectorizing or flag requirements and installation location and procedures.

CAUTION

To insure high visibility during flight line/airfield operations, all aircraft ground support equipment (vehicle or pieces of equipment used to direct support of aircraft/airfield operations) will be striped with reflectorized tape or will display a white-orange checkered flag.

a. *Reflectorized Tape Use*. All non-tactical ground support equipment (which is normally painted yellow) will be outlined with reflective tape to insure high visibility during lowlight level operations. Striping shall be in accordance with materials and instructions specified in paragraphs b and c.

b. *Reflectorized Tape Location*. Equipment shall be marked in a manner to outline the entire piece of equipment, so that during periods of low visibility the entire outline of the equipment will be obvious. Outline the equipment as follows:

NOTE

If area to be striped can not accommodate 4 inch wide tape, use the widest width possible.

(1) Outline the equipment with 4 inch wide silverwhite tape conforming to Federal Specification L-S-300, NSN 9390-00-949-8047.

(2) Compound surfaces (corners, large bolts, rivets, etc.) may be left unmarked.

c. *Reflectorized Tape Installation*. The following procedures shall be used to apply reflectorizing sheeting, Federal Specification L-S-300:

(1) Clean surfaces of all loose scale and dirt by brushing or applying cleaning compound, Federal Specification P-C-437. Remove deposits of cleaning

compound by washing with clear water. Dry surfaces with high-pressure compressed air.

(2) Measure reflectorizing sheeting, and cut to desired lengths.

(3) Start removal of protective paper liner from adhesive by holding the tape reflective side in and flick one corner sharply in toward reflective face. When corner is loosened lay the reflective side of tape down on smooth surface and jerk the paper liner off to half the length of strip. Fold loosened paper liner.

NOTE

- Apply only when equipment surface temperature is above 60°F (16°C), activate adhesive lightly with a solvent activator as recommended by the reflective tape manufacturer.

- The reflective tape cannot be subjected to paint oven baking process.

(4) Position on equipment and adhere one edge with finger. Hold unapplied portion slightly away from surface to prevent premature adhesion. Wipe tape to surface with firm pressure, using a plastic squeegee. Remove remaining liner and apply remainder of tape. Any air bubbles should be pricked with pinpoint and air worked out with squeegee.

(5) Apply clear edge sealer, as recommended by reflective type manufacturer, to edges of tape to prolong life of marking.

(6) Repair to damaged reflective areas can be made without stripping of original sheet. Abrade any rough edges, clean damaged area thoroughly and apply a new piece of reflective tape over damaged area.

d. *Checkered Flag Use*. For all aircraft/airfield support equipment which cannot be taped (i.e. tactical vehicles, tractors, sweepers, occasional use vehicles, etc.) will display a white-orange checkered flag conforming to MIL-F-40047, NSN 8345-00-027-3704.

(1) Flying the flag. The flag will be flown while on the flight line or any area which aircraft may be present.

(2) Mounting the flag. The flag shall be mounted to facilitate easy removal when departing airfield area or when entering into a tactical condition.

9-5. Marking. Ground support equipment has markings on it in addition to refectorized tape. The following paragraphs highlight and explain the markings.

a. *General*. Ground support equipment is required to bear identification marking to the greatest extent considered practical consistent with safe practice, types and models, and the availability of the space required for such marking.

b. *Marking Requirements*. Marking requirements for ground support equipment are described in the following paragraphs.

(1) Ready-made markings. Pre-fabricated plastic film symbols, letters, numbers and instructional placards may be used in lieu of stencil paint. The plastic film shall meet requirements of MIL-F-8799, with an adhesive which will permit positioning of marking without pre-adhesive, at temperatures up to 100°F (38°C).

(2) Types of markings. The following paragraphs describe the types of markings.

NOTE

- Letters and numbers shall be sharply defined Gothic style conforming to MILSTD-642 or as amended. Unless otherwise specified, the size selected shall be the largest size practical for available space, consistent with good appearance and visibility.

- The national symbol shall not be used on equipment operated in CONUS.

(a) National symbol. The national symbol, which is a white, five-pointed star, may be applied to ground support equipment operated by the Department of the Army in overseas theaters by direction of the theater commander concerned.

(b) Letters and numerals. Gothic type letters and numerals of 1/2 inch, 1 inch, 2 inch, 3 inch, or 4 inch shall be used for marking.

(c) Safety markings. Safety markings, shall be applied to all ground support equipment where necessary to prevent injury to personnel or damage to equipment.

1 Requirements. These markings will indicate danger areas, voltage and power ratings, towings instructions, and similar precautions. Major safety precautions shall be placed in a conspicuous location on the equipment.

2 Color of markings. All safety markings shall have letters and numerals in white on red surfaces.

(*d) Operational markings.* Operational markings shall be applied to all ground support equipment to instruct operating personnel of duties and maintenance, such as tire pressure, fuel octane rating, oil grade, and operational controls.

- Equipment without adequate operational nameplates on the operator's compartment may have the name or duty performed by the lever, switch, valve, or pedal, stenciled near each, and the use or direction of movement if needed.
- The stencil shall be the smallest readable size. Understandable abbreviations may be used.
- Such items as TIRE PRESSURE, NO STEP, SPEED LIMIT, etc. , shall be stenciled immediately adjacent to the particular part involved.
- Special towing instructions shall be stenciled near the towing attachment.
- Safety markings shall be positioned in an easily observed area and shall be of such size to be legible at a minimum distance.
- Danger areas shall be clearly marked.
- Where fire extinguishers are carried in concealed locations, the locations shall be adequately marked.
- Equipment with an exhaust system which is a hazard to personnel shall be adequately marked.
- Lifting capacities of aircraft jacks and similar lifting devices will have capacity legibly marked.

(e) Agency markings. Agency identification markings shall be applied to indicate that the unit of equipment belongs to the Department of the Army.

(f) Reconditioning markings. Reconditioning markings shall be applied to indicate of overhaul and reconditioning activity.

(g) Location of markings. The various types and models of ground support equipment prohibit the establishment of detailed instructions for the application of marking for each type or model.

(h) Colors and sizes of markings. Color, style, and size of markings will be as follows:

1 Stencil markings shall be accomplished using black paint, color number 37038, Federal Specification A-A-1558, on yellow or gray surfaces. However, letters and numerals for all safety markings shall be accomplished using white paint, Federal Specification A-A-1558, on red surfaces.

2 Block type letters and numerals of 1/2-inch, 1-inch, 2-inch, 3-inch, or 4inch size shall be used for marking.

(i) Maintenance of markings. Markings shall be clearly maintained on all items of equipment at all times, with the following exceptions:

1 Upon transfer within the Department of the Army, all organizational markings shall be removed.

2 Upon assignment under bailment contracts to private contractors, all exterior markings shall be removed.

3 Upon permanent transfer to disposal agencies or upon sale to commercial contractors, all Department of the Army markings shall be obliterated or removed.

NOTE

When the requirements for camouflage or concealment outweigh the requirement for identification, the markings prescribed herein may, by direction of the major command concerned, be obliterated by some readily removable substance.

9-6. Storage of Ground Support Equipment. Guidance pertaining to storage, inspection, and preservation will be covered in the following paragraphs.

a. General. The information contained herein provides instructions for processing serviceable and economically reparable ground support equipment for storage or shipment, and that equipment presently in storage. These instructions pertain to all ground support equipment assigned to the Department of the Army. Equipment which is to be placed in service or repaired within ninety days shall not be processed for storage, but shall require sufficient protection to prevent further deterioration.

b. Safety Practices and Procedures. In addition to the safety precautions given in Chapter 2, paragraph 2-8, the following safety practices and procedures apply:

(1) When moving ground support equipment, do not tow at speeds over 5 mph.

(2) Apply hand brakes or install chocks to keep ground support equipment from moving unintentionally.

(3) Avoid sparks at battery terminals when connecting or disconnecting battery cables.

(4) Promptly investigate any liquid leaks.

c. Storage Instructions. Ground support equipment shall be stored under cover, in buildings, or as required in SB 38-8-1. The equipment shall be stored to permit access for inspection and servicing during the storage period. Adequate security measures and fire protection shall be provided.

d. Time Limit. Equipment preserved for long term storage in accordance with paragraph 9-17 and inspected in accordance with paragraph 9-6e will be depreserved, exercised and represerved within 12 months of preservation date.

e. In-storage Inspection: Equipment preserved in accordance with paragraph 9-7 an in-storage inspection will be conducted at 90 day intervals.

(1) The following guide shall be used for inspection of equipment in storage:

(a) Condition of painted surfaces.

(b) Effectiveness of preservation applied.

(c) Evidence of rust or corrosion.

(d) Shortages of parts or accessories (other than those listed in DA Form 1574 or 1577-2, if applicable.)

(e) Air pressure in tires.

(f) Leakage of lubricants.

(g) Review and update all applicable forms and records.

(h) Enter on material condition tag, in pencil, "Inspected" followed by the date and the initials of the inspector.

(2) Calibration of Equipment in Storage. Ground support equipment in storage does not require periodic calibration. Enter "CBU" (Calibrate Before Use) on the DA Label 80 either at the time the equipment is placed in storage or on the date indicated on the label as the calibrated due date.

(3) Represervation. Deterioration noted during inspection shall be repaired and the affected area represerved. Damage or pilferage shall be noted on DA Form 2404 as appropriate and reported in accordance with local procedures.

9-7. Preservation of Aviation Ground Support Equipment for Long Term Storage. All serviceable or economically repairable ground support equipment which will not be in service or repaired within 90 days shall be processed in accordance with this paragraph.

a. Forms and Records. Preservation of items in accordance with this paragraph requires the following entries on forms prepared in accordance with DA Pam 738-750.

(1) DD Form 314 Preventive Maintenance Schedule and Record. Annotate, in pencil, the remark blocks to read "Preserved..." followed by the date of preservation and "Preserved if not activated by..." followed by the date 12 months from the date of preservation.

(2) Materiel Condition Tags. Each item preserved in accordance with this section will have attached to it in a conspicuous place a DD Form 1577 serviceable tag. Materiel or DD Form 1577-2 unservicable (Repairable) Tag-Materiel as appropriate. Annotate the remarks block of the tag (in pencil) to read "Preserved..." followed by the date of preservation and "Preserved if not activated by..." followed by a date 12 months from the preservation date.

(3) DA Label 80. For equipment requiring calibration, annotate the DA Label 80 as required in paragraph 9-6e (2).

(*4) DA Form 2404.* Prepare DA Form 2404 as required in accordance with paragraph 9-7b.

b. Preventative Maintenance Service. Prior to preserving a piece of equipment for storage perform the next scheduled major preventative maintenance service (quarterly, semi-annual, etc.) in accordance with applicable technical manuals, lubrication orders, and technical bulletins. Equipment discrepancies will be listed on DA Form 2404 in accordance with DA Pam 738-750. For equipment faults that create a Not Mission Capable Supply (NMCS) equipment status, enter the document number(s) of the associated requisition(s) in Column C.

c. Cleaning. An essential first step in the preservation of AGSE is cleaning and drying. Cleaning removes corrosive deposits such as soil, chemicals, bird dropping and exhaust residue and materials such as oil and grease that will attract corrosive deposits. After cleaning, the item will be thoroughly dried by draining and/or blowing with compressed air. AGSE will be thoroughly cleaned and dried prior to the application of the preservation procedures in applicable equipment publications and this paragraph.

d. Applicability. AGSE will be preserved in accordance with the applicable equipment technical manuals, lubrication orders, and technical bulletins. The information provided in this paragraph is supplemental to the information contained in the applicable equipment publications.

e. Processing. In the absence of guidance in specific equipment publications, ground support equipment will be preserved by applying the techniques indicated below for equipment components applicable to the item being preserved.

(1) Painted Metal Surfaces.

(a) Cleaning. Clean surfaces using, MIL-C87936, cleaning compound. Clean stubborn or exceptionally oily areas with P-D-680 type II dry cleaning solvent. Dry equipment.

(b) Preservation. Inspect surfaces for corrosion and treat in accordance with the procedures in TM 55-1500-344-23, aircraft weapons systems cleaning and corrosion control, applicable to the type of metal affected. Bare spots and treated areas will be.

(2) Non Painted Metal Surfaces.

(a) Cleaning. Clean unpainted metal surfaces in accordance with paragraph 9-7e (1) (a). Through drying is particularly important for unpainted surfaces.

(b) Preservation. Inspect surfaces for corrosion and treat in accordance with the procedure in TM 55-1500-204-23 applicable to the type of metal affected. Coat unpainted metal areas such as frames, rods, springs, and pintle assemblies with corrosion preventative compound MIL-C-16173, Grade 3. Coat light metal surfaces such as the inside of cowls and access panels with lubricating oil MIL-L-21260, Type I, grade 10.

(3) Air Compressors. Clean and preserve exterior surfaces of air receivers and compressors in accordance with paragraph 9-7a. When compressor lubricating system is separate from the associated power unit, drain and service to operating level with lubrication oil as specified in the equipment publications. Remove and service the air cleaner in accordance with paragraph 9-7e (8). With the compressor running, spray lubricating oil MIL-L-21260, Type I, grade 10 into intake until oil appears at the final stage discharge. Drain air receivers and lines of condensation. Leave drain cocks open and attach UU-T-81 warning tag to operating controls stating "Close Drain Cocks Prior to Use. " If the air receiver is located down stream of air oil separators, fog the receiver with MIL-L-21260, Type I, grade 10 oil. Coat interior steel surfaces of the pressure regulator system with MIL-L-21260, Type I, grade 10 lubricating oil. Reinstall air filter and seal all compressor opening with MIL-B-131, Class 3 barrier material and PPP-T-60, Type IV, class 1 tape.

(4) Reciprocating Engines Operable.

(a) Cleaning. Clean engine exteriors with PD-680, Type II, dry cleaning solvent in accordance with TM 1-1500-204-23-1. For cleaning air temperature below 20°F use cleaning compound O-C-1889.

(b) Preservation of Liquid Cooling Systems. Completely drain engine cooling system including radiator and block. Refill cooling system in accordance with equipment publications. Test anti-freeze for desired protection after running the engine sufficiently to insure thermostat opening and thoroughly mixing of coolant. Coat cooling system hoses with O-G-491 glycerol.

(c) Lubrication. Operate engine to warm oil. Drain oil and clean or replace filter as applicable. Service engine with clean oil to operating level in accordance with the appropriate equipment publications.

(d) Intake System Gasoline Engine. Drain fuel tank and add a mixture of 1 1/2 pints of MIL-L21260, Type 1, grade 10 oil to one ounce W-G-800 gum preventative compound to five gallons of gasoline (gasoline/oil mixture for two cycle engines). Start and operate engine, varying rpm. After engine has warmed, open throttle to approximately 2/3 operating rpm and very slowly pour oil in engine and allow to cool. Seal all openings with MIL-B-131, class 3, barrier material and PPP-T-60, Type IV, class 1 tape.

(5) Reciprocating Engines (Inoperable)

(a) Cleaning. Clean inoperable engines in accordance with paragraph 9-7e (4) (a).

(b) Preservation of Liquid Cooling Systems. Check anti-freeze solution for adequate protection. If protection. If protection is not adequate, completely drain cooling system and refill with the appropriate anti-freeze indicated in paragraph 9-7e (4) (b). The engine thermostat may have to be removed to allow complete draining and insure refilling of the engine block cooling jacket. Coat all hoses with O-G-491 glycerol.

(*c) Lubrication*. Drain oil and clean or replace oil filters as appropriate. Remove valve covers, oil pan and covers from accessory drives. Spray all accessed areas with MIL-L-6529 Type 2. Corrosion preventative compound. Reinstall all covers with new gaskets and tighten hold down nuts to specific torque value. Remove all spark plugs and spray interior of each cylinder with MIL-L-6529, Type 2, corrosion preventative compound. Spray each cylinder with piston at bottom dead center. Proceed in firing order until all cylinders have been treated. Without rotating crank shaft, provide a final spray of all cylinders. Clean spark plugs and reinstall. Seal all intake, exhaust vents, and breather openings with MIL-B-131, class 3, barrier material and PPP-T-60, Type 5, class 1, tape.

(6) Turbine Engines. Clean and preserve turbine engines in accordance with the applicable equipment maintenance manual. Clean inlet area of turbine engines of dirt and debris. Install intake and exhaust covers and seal with MIL-B-131, class 3, barrier material and PPP-T-60 Type 4, grade 1, tape.

(7) Fuel Systems. Drain fuel tank, lines, sediment bowl, and fuel filter. Clean or replace fuel filter as appropriate. Remove corrosion from underside of metal fuel caps and apply TT-P-664 primer. Inspect metal fuel tanks for corrosion. If excessive corrosion is present, treat in accordance TM 55-1500-344-23. After inspection and/or treatment, fog interior of tank with MIL-L6529, Type 2, corrosion preventative compound.

(8) Air Cleaners.

(a) Oil Bath. Clean and service oil bath air cleaners in accordance with MIL-L-21260, Type 1, grade 10 lubricating oil and seal the openings with MIL-B-1 31, class 3 barrier material and PPP-T-60, Type 5, class 1 tape.

(b) Dry Type. Clean and/or replace filters as appropriate. Seal all openings with MIL-B-131, class 3 barrier material and PPP-T-60 Type 4, class 1 tape.

(9) Exhaust Systems. Coat exposed portions of exhaust system with MIL-C-16173, grade 3, corrosion preventative compound, seal openings with MIL-B-131, class 3, barrier material and PPP-T-60, Type 4, class 1 tape.

(10) Ignition Systems. Lubricate distributor or magnets as specified in equipment publication. Coat electrical cables and leads with O-G-491 glycerol.

(11) External Drives. Release tension on drive belts. Clean pulleys and spray with TT-P-664 primer. Coat exposed gears with MIL-C-16173, grade 3, corrosion preventative compound.

(12) Gearboxes. Clean and treat exterior surfaces of gearboxes in accordance with paragraph 9-7e (1). Service to operating level with the lubrication specified in the applicable equipment publications.

(13) Operating Mechanisms. Lubricate hinges and latches with MIL-L-21260, Type 1, grade 10, lubricating oil. Apply a light coat of O-G-491 glycerol on rubber seals and bumper blocks.

CAUTION

Insure that tape does not contact polished surface of actuator rod.

(14) Hydraulic Systems. Service hydraulic system in accordance with the applicable equipment publications. Clean and treat metal hydraulic components except actuator rods, in accordance with paragraph 9-7e (1). Clean and coat hydraulic actuator shafts with the type of hydraulic fluid specified for the system in the applicable equipment publications. Wrap the actuator rods with MIL-B-131, class 3, barrier material secured with PPP-T-60 Type 4, class 1 tape.

(15) Brake Systems. Exterior unpainted or threaded surfaces such as cables, clevises, and linkages of service and parking brakes will be coated with MIL-C-16173, grade 4, corrosion preventative compound. Hydraulic brakes will be serviced to the operating level with the fluid specified in equipment publications.

WARNING

Both lead-acid and nickel-cadmium batteries produce gasses that can explode. Do not smoke, use open flames, or make sparks around batteries.

WARNING

Electrolyte and corrosion products from both lead-acid and nickel-cadmium batteries will cause injury. Wear safety goggles, gloves, or apron. If electrolyte or corrosion products, contact eyes, skin or clothing, flush immediately with large quantities of cold water. In the case of eye contact, see a physician immediately.

CAUTION

Keep nickel-cadmium batteries away from lead-acid batteries. Do not handle or service them with the same tool.

(16) Batteries. The processing of batteries will vary with the type of battery. All batteries, including dry cell type will be removed from equipment being preserved. When removing batteries disconnect negative cable first to avoid arcing

CAUTION

Lead-acid battery cleaning solution (sodium bicarbonate) will damage battery if allowed inside battery cells. Use care to prevent solution from entering through or around caps.

(a) Lead-Acid Batteries. Remove battery from equipment. Clean battery using a H-B-643 acid swabbing brush or equivalent and a solution of 1/2 pound of O-S-576 sodium bicarbonate to one gallon of water in accordance with TM 9-6140-200-14 Operators, Organizational, Direct Support and General Support Maintenance Manual for lead-acid storage batteries. Clean and neutralize battery cables, clamps, supports, retainers, and battery box using the above sodium bicarbonate solution. After cleaning, paint battery box area as required in accordance with paragraph 9-3, TM 1-1500-204-23-9. Coat battery terminals and cable clamps with VV-P-236 petrolatum. Wrap cable ends with MIL-B-131, class 3, barrier material secured with PPPT-60, Type 5, class 1, tape and secure to battery holder.

(c) Dry Cell Batteries. Remove batteries from equipment and store in cool dry place.

(17) Fire Extinguishers. All portable type fire extinguishers shall be serviceable and remain in place on the equipment.

(18) Keys and Locks. Tie together all keys, not fixed in locks; place in envelope and store with forms and records. Locks shall be treated with grease, molybdenum sulfide, MIL-G-21164, and openings shall be sealed with MIL-B-131, class 3, barrier material, secured with PPP-T-40, Type 4, class 1 tape.

(19) Generators, Alternators, and Electric Motors. Clean and preserve exterior surfaces in accordance with paragraph 9-7a. Blow accumulation of dust from interior surfaces with compressed air directed through ventilation openings. Cover openings with MIL-B-131, class 3, barrier material, sealed with PPP-T-60, Type 4, class 1 tape. Securely attach UU-T-81 warning tag to operating controls stating "Remove Packaging Tape Prior to Use. "

(20) Data Plates. Spray data plates, MILV-173, in exposed locations on instrument panels, bodies etc, with a thin coat of varnish insulation compound. Control overspray to avoid coating adjacent surfaces.

f. Depreservation. Depreserve equipment as follows:

(1) Protective Covering. Remove all protective covering materials to include polyethylene film, barrier materials, and tape.

(2) Preservatives. Remove external preservatives with approved solvents as necessary.

(3) Tires. Inflate tires to prescribed pressure (when applicable).

(4) Fire Extinguishers. Inspect fire extinguishers as required.

(5) Batteries. Install serviceable batteries as required.

(6) Brakes. Check and service hydraulic brakes systems to operating lever with the fluid specified in equipment.

(7) Hydraulic System. Check and service hydraulic systems to operating level with fluid specified in the equipment publications.

(8) Gear Boxes. Service gear boxes to operating level with the lubricant specified in the equipment publications.

(9) External Drives. Check drive belts for serviceability and adjust to tension specified in the equipment publications.

(10) Fuel Systems. Service with operating fuel specified in the equipment publications.

(11) Turbine Engines. Depreserve turbine engines as specified in the equipment publications.

(12) Gasoline Engines

(a) Lubrication. Service engine as required with the operating oil specified in the equipment publications. TM 1-1500-204-23-9

(b) Liquid Cooling System. Service system as required and test coolant for desired anti-freeze protection.

(13) Air Compressors. Service as required with the operating oil specified in the equipment publications. Close the air receiver drain cocks and inspect as required.

(14) Cleaning. Clean equipment in accordance with paragraph 9-7e (1) and treat corrosion as required.

(15) Preventive Maintenance Service. Perform any remaining items of the annual preventative maintenance service.

(16) Calibration. Calibrate equipment as required.

(17) Forms and Records. Update equipment forms and records to preservation data on material condition tags.

g. Represervation. When equipment in storage is to be represerved for storage, proceed as follows:

(1) Depreserve. Depreserve equipment in accordance with paragraph 9-7f.

(2) Exercise. Operate equipment and all systems in accordance with equipment publications.

(3) Preserve. Preserve equipment in accordance with paragraph 9-7e. When preserving an item previously prepared for storage in accordance with paragraph 9-7e, lubricant and engine do not need to be drained.

9-8. Shipping and Receiving Ground Support Equipment.

a. Preservation for Shipment. Equipment will be preserved for shipment in accordance with paragraph 9-7.

b. Packing and Crating. Guidance on packaging and crating equipment for shipment is provided in TM 38-230-1, TM 38-230-2, and TM 746-10. For assistance in obtaining additional information on packaging contact Commander, U. S. Army Aviation and Troop Command, ATTN: AMSAT-I-SDP, 4300 Goodfellow Blvd, St. Louis, Mo. 63120-1798.

9-9. Types of Ground Support Equipment. The following paragraphs will describe various types of ground support equipment used to perform aircraft maintenance. In general, principles of operation, safety practices and procedures, operating procedures, inspection, and maintenance will also be covered.

a. General. Ground support equipment is both powered and nonpowered. It can be as simple and small as a hand-powered, level-operated grease (lubricating) gun to as large and complex as an aircraft towing vehicle. Whatever the size, shape, or intricacy, each piece of ground support equipment has a function and needs to be maintained to perform that function.

b. Maintenance Workstands, Maintenance workstands are used wherever aircraft maintenance is performed, both on the flightline and in hangars. Workstands come in a variety of shapes and sizes. Four types of workstands will be discussed herein.

(1) Maintenance platform, type B-1. The B-1 maintenance platform, as shown in figure 9-1, is a portable, variable-height, stair and platform assembly. The work platform is hydraulically raised and lowered, and is accessed by an adjustable stair assembly.

(a) Purpose. The B-1 maintenance platform has a working range of 3 to 10 feet. It will support a maximum of 500 pounds on the work platform.

(b) Principles of operation. The maintenance platform consists of a main base and a platform surface. The platform surface is above and connected to the base by a stair assembly. A hand-operated hydraulic pump is used to draw fluid from a reservoir and force it into the hydraulic cylinder assembly, causing the cylinder to extend. The cylinder assembly is connected to the stair assembly and as it extends, causes the platform surface to raise. When the platform is raised to the desired height, the cylinder assembly is manually locked by turning the cylinder lock assembly. The platform is lowered to the down position by normally opening the bypass valve, allowing the fluid from the cylinder assembly to bypass the hand pump and return to the reservoir, causing the upper structure to lower.

(c) Safety practices and procedures. The following special precautions should be observed when using the B-1 maintenance platform:

- Rotate the hydraulic cylinder lock so the fingers engage the slots in the cylinder barrel before ascending the platform.
- Lower and engage the immobilizing jacks to keep the platform from rolling.
- Use the handrails when ascending or descending the stairs.
- Leave the handrails on the maintenance platform in place unless they interface with the work area.

(d) Operating procedures. The following procedures pertain to the operation of the B-1 platform:

1 Place the maintenance platform in the location where it is to be used.

2 Depress the levers of the immobilizing jacks to the locked position.

3 Close the hand pump by-pass valve by turning it in a clockwise direction.

4 Operate the pump handle until the platform is at the required height.

5 Engage the hydraulic cylinder lock on the hydraulic barrel.

6 Climb the stairs and do the task.

7 Reverse these procedures to lower the platform when the task is complete.

(e) Inspection. Detailed inspection requirements can be found in the applicable maintenance manual. The following operator inspections should be made before using the maintenance platform.

1 Visual inspection. Look over the entire maintenance platform to see if it is in good condition, correctly assembled, and secure.

2 Leaks. Inspect the hydraulic fittings and lines for leaks.

3 Hydraulic fluid. Check the fluid level and service if necessary.

4 Tampering. Inspect the maintenance platform for signs of tampering or damage.

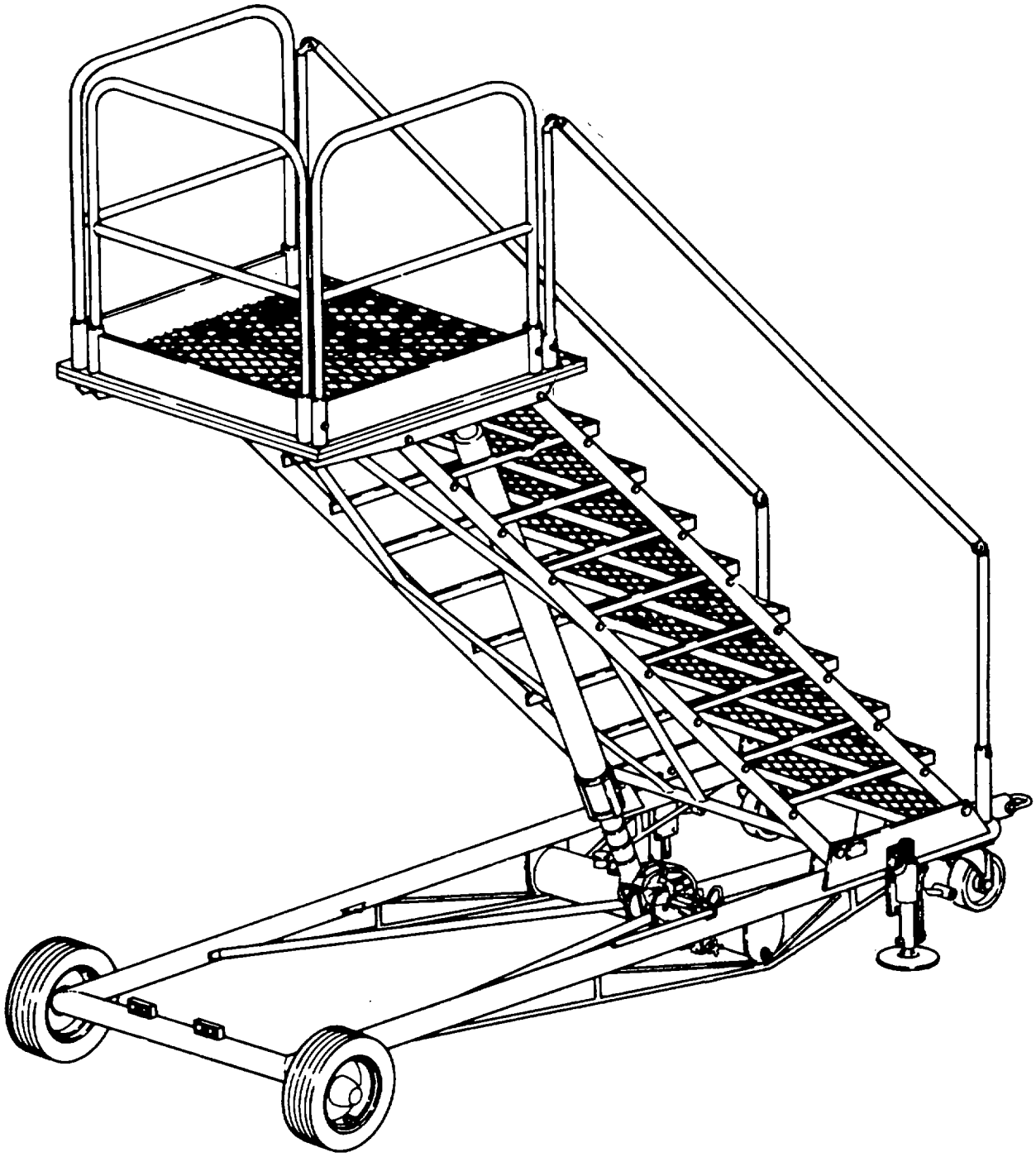

Figure 9-1. Type B-1 Maintenance Plafform

(f) Maintenance. Consult the applicable maintenance manual for preventive and scheduled maintenance requirements.

(2) Folding maintenance stand, type B-4A. The B-4A maintenance stand, shown in figure 9-2, is an adjustable platform and ladder assembly mounted on a caster-equipped base. The maintenance stand is hydraulically raised and lowered. .

(a) Purpose. The B-4A maintenance stand has a working height of 3 to 7 feet. It will support a maximum weight of 500 pounds on the platform.

(b) Principles of operation. The maintenance stand consists of a main base and a platform surface. The platform is above and connected to the base by a scissors assembly. A hand-operated hydraulic pump is used to transfer fluid from a reservoir to a piston assembly, causing the piston to extend. The piston assembly is connected to the scissors and as it extends, causes the platform to raise. When the platform is raised to the desired height, it is manually locked with lockpins. The platform is lowered to the down position by manually opening a release valve on the pump, allowing the fluid to return to the reservoir and the piston to retract.

(c) Safety practices and procedures. The following special precautions should be observed when the using the folding maintenance stand:

- Do not stand on the ladder while raising or lowering the platform.
- Apply the caster brakes when the stand is in position.
- Install the two platform safety pins when the platform is at the desired height.
- Leave the platform rails in place unless they interfere with the work area.

(d) Operating procedures. The following procedures pertain to the operation of the B-4 folding maintenance stand:

1 Position the maintenance stand in the desired location.

2 Lock the casters on all four wheels and apply the brakes on the two rear casters.

3 Open the vent plug and close the release valve.

4 Operate the hand pump until the platform is at the required height.

5 Install the two safety lockpins.

6 Climb the ladder and do the task.

7 Upon task completion, dismount the stand.

8 Open the vent plug and raise the platform slightly to make removing the safety lockpins easier.

9 Remove the safety lockpins.

10 Slowly turn the release valve lever in a counterclockwise direction until the stand begins to lower.

11 When the platform is fully down, close the vent plug and the release valve.

(e) Inspection. The following operator inspections should be made before using the folding maintenance stand.

1 Pump reservoir. Check the fluid level and service if necessary.

2 Hydraulic hoses. Inspect for security and signs of damage.

3 Actuating cylinder. Look for evidence of leaking.

4 Swivel casters and brakes. Check for proper operation, adequate lubrication, and broken or chipped wheels.

5 Roller channels, ladder guides, and scissors pivot points. Look for cleanliness and adequate lubrication.

(f) Maintenance. Consult the applicable maintenance manual for preventive and scheduled maintenance requirements.

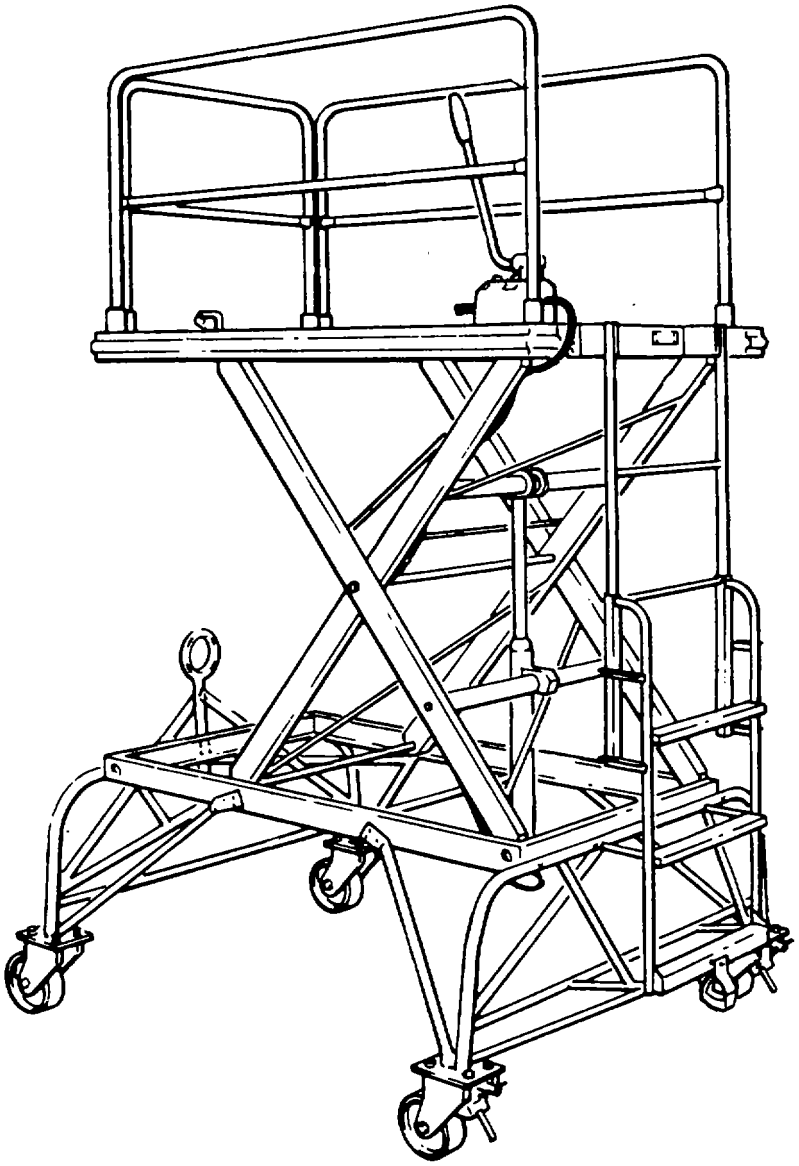

Figure 9-2. Type B-4A Maintenance Stand

(3) Aircraft engine maintenance stand. The aircraft engine maintenance stand, shown in figure 9-3, provides an essentially nonmovable work station for repair of aircraft engines.

(a) Purpose. The engine maintenance stand is designed to allow disassembly and reassembly of aircraft engines. The rails allow easy transition of the engine between the engine stand and the engine trailers. Adapters make the stand useful for several types of engines.

(b) Principles of operation. The engine maintenance stand has two rails which allow the engine to be transferred from the engine trailer to the stand. There are spring-loaded stops at the ends of each rail to prevent the engine from accidentally rolling off the stand. The rails are vertically adjustable to accommodate height difference in engine trailers.

(c) Safety practices and procedures. The following special precautions should be observed when using the engine maintenance stand:

- Be sure the rail steps are up unless an engine is being transferred.
- Push the engine slowly, as its weight will make the stand hard to shop if it rolls too fast.
- Keep the rails level from end to end so the engine will not have a tendency to roll.

(d) Operating procedures. The following procedures pertain to the operation of the engine maintenance stand:

1 Align the engine trailer rails with the maintenance stand, both longitudinally and vertically.

2 Slowly push the engine from the trailer to the stand, retracting the rail stops at the union of the rails as the engine adapters go past this point.

3 Position the engine and secure the adapters.

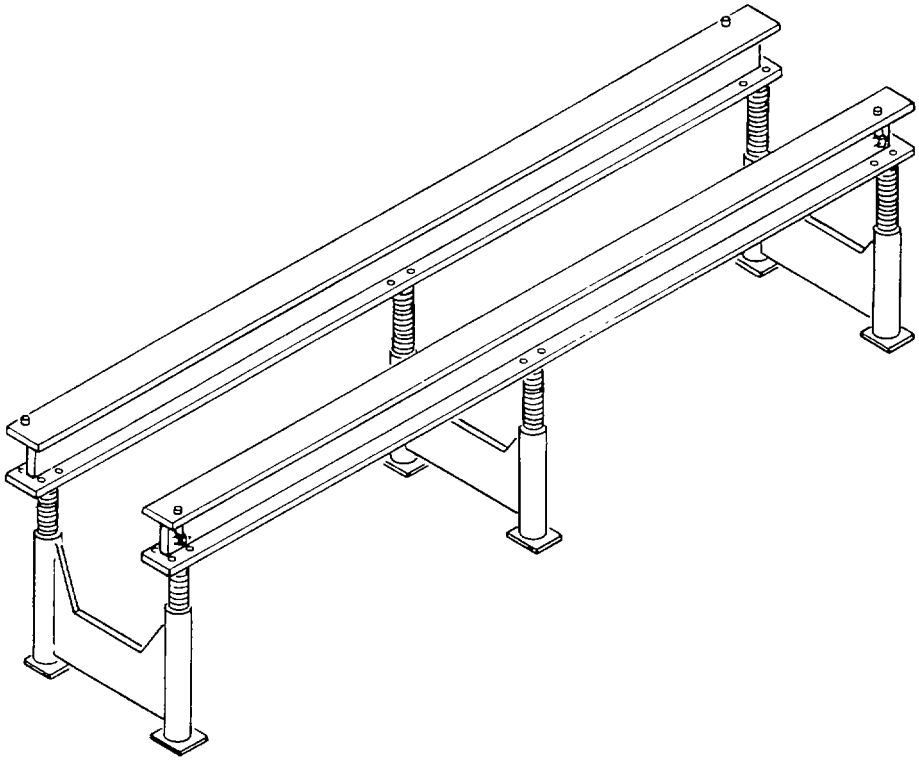

Figure 9-3. Engine Maintenance Stand

4 Using adapters and a hoist if necessary, disassemble the engine as required.

5 After the engine is reassembled, it may be removed from the engine maintenance stand by reversing these procedures.

(e) Inspection. The operator should visually look at the welds for cracks and check the rail stops for proper operation prior to using the stand.

(f) Maintenance. Consult the applicable maintenance manual for scheduled and preventive maintenance requirements.

(*g) Sweeney adapters*. Consult the applicable engine maintenance manuals for adapters that can be used. TM 1-1500-204-23-9

(4) Self-propelled elevated maintenance workstand. The Self-Propelled Elevated Maintenance (SPEM) workstand, shown in figure 9-4, is driven by a gasoline engine. The stand is self propelled at 2 mph and can be driven from the workbasket.

(a) Purpose. The SPEM stand is useful for reaching areas of an aircraft that are not accessible from a type B-1 or Type B-4A stand. The extendable arm allows the workbasket to go over the aircraft and to a height of 40 feet.

(b) Principles of operation. The SPEM stand is counterbalanced and propelled by a gasoline I engine. The rear drive wheels are equipped with hydraulic brakes that engage automatically when the drive control is released. The front steering wheels have electric brakes which are operated from the workbasket. The turntable is hydraulically-operated and cab be rotated 350 degrees from the workbasket.

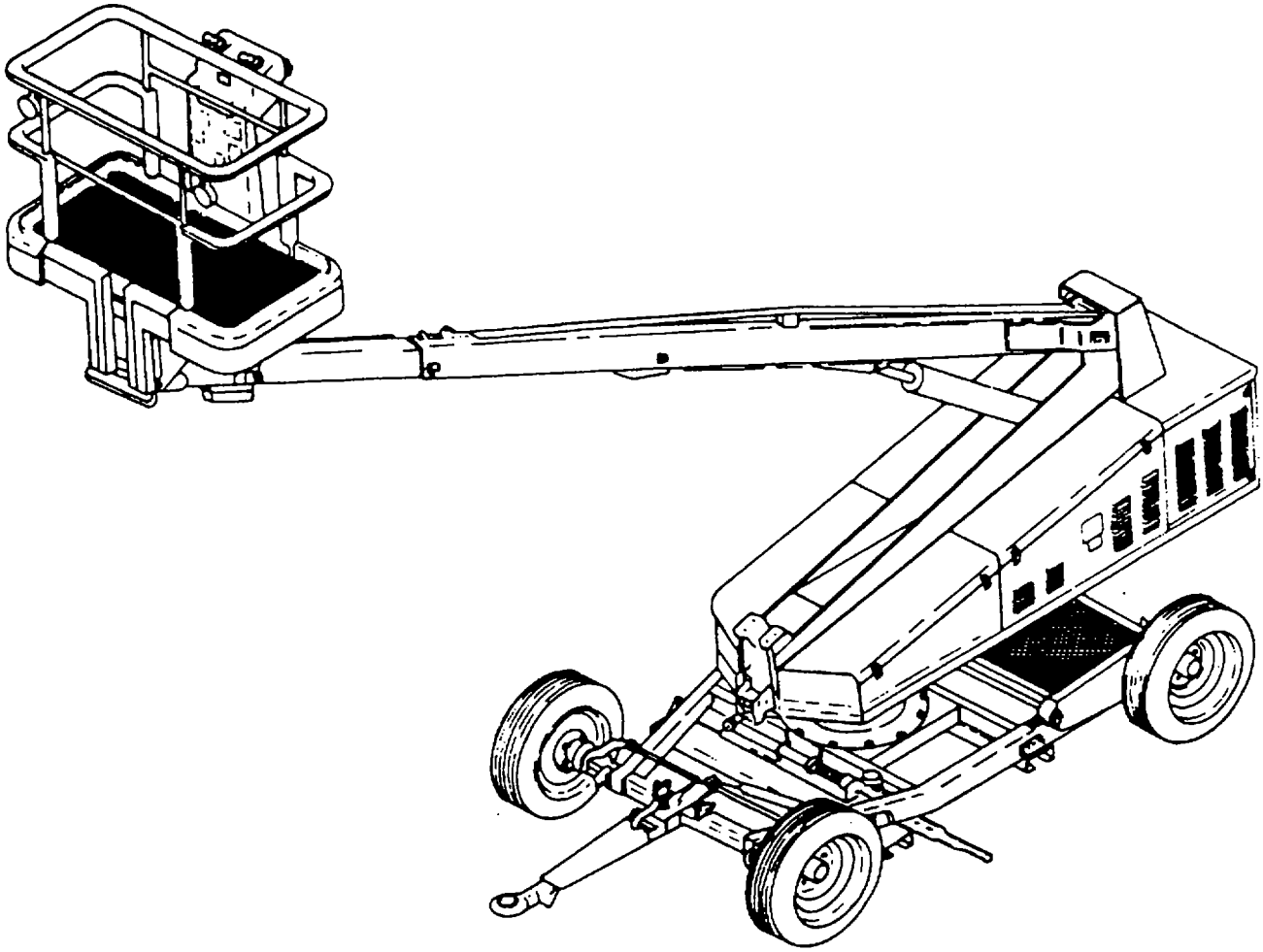

Figure 9-4. SPEM Stand

(c) Safety practices and procedures. The following special precautions should be observed when using the SPEM stand:

- Do not exceed the weight capacity of the workbasket.
- Check the area before lowering the workbasket or rotating the turntable.
- Do not try to propel the stand from the workbasket with the hand parking brake engaged.

(d) Operating procedures. The following procedures pertain to the operation of the SPEM stand:

1 Tow the stand to the work site.

2 Use the self-propelling motor to locate the stand in a working position.

3 Enter the workbasket and position it as necessary using the extendable arm, self-propelling, and turntable capabilities.

4 Reverse these procedures to stow the stand when the work is complete.

(e) Inspection. The following general operator inspection apply to the SPEM stand.

1 *Visual inspection*. Look over the entire stand for obvious damage or leaks.

2 *Batteries*. Check electrolyte level.

3 *Hydraulic reservoir*. Check fluid level. Service if necessary.

4 *Tires*. Check for proper pressure.

(f) Maintenance. Consult the applicable maintenance manual for preventive and scheduled maintenance requirements.

c. Hydraulic Test Stand. The hydraulic test stand, shown in figure 9-5, is a mobile, self-contained hydraulic testing unit. It is enclosed in a steel, weather resistant housing, mounted on a trailer assembly that has a two bar to permit towing with a vehicle. Access to components in the housing is provided by doors.

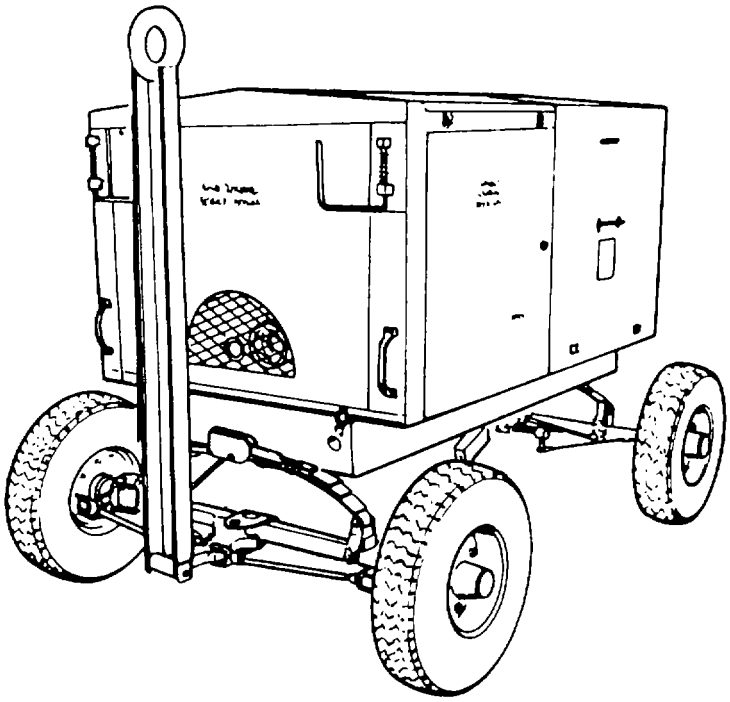

Figure 9-5. Type D5 Hydraulic Test Stand

(1) Purpose. The D5 hydraulic test stand is designed to fill or flush the aircraft hydraulic system with micronically-filtered hydraulic oil. It also tests the aircraft hydraulic systems and provides hydraulic pressure for testing the systems without running the aircraft engines.

(2) Principles of operation. The hydraulic fluid may be taken from either the test stand reservoir or the reservoir in the aircraft being tested, through the suction inlet. Once obtained, the hydraulic fluid is then forced under pressure by the high pressure pump to the selected pressure outlet, and then through one of the external hoses to the aircraft. Fluid is returned to the test stand through either the 1/2 or 3/4 inch outlet, depending upon the outlet selector valve setting, or through the one-inch return line. There is complete instrumentation on the control panel to indicate hydraulic pressure, suction pressure, hydraulic reservoir level, and fluid temperature. The test stand can deliver hydraulic fluid at the rate of 10 gpm at pressures up to 3,000 psi and, with reduced flow, 5 gpm or less at pressure from 3,000 to 5,000 psi.

(3) Safety practices and procedures. The following special precautions should be observed when using the hydraulic test stand:

- Unpressurize the test stand before disconnecting or connecting any hoses or fittings.
- Do not stand downwind of and close to the engine exhaust.
- Be aware of the hazards associated with a fluid in a hose at high pressures.
- Avoid contamination in both the test stand and the aircraft systems by servicing from a previously unopened can that has been wiped clean.

(4) Operating procedures. Consult the applicable maintenance manual for detailed instructions. The following general procedures pertain to the operation of the D5 hydraulic test stand:

(a) Maneuver the test stand into a suitable position for hose connection.

(b) Apply the handbrake.

(c) Start the gasoline engine and allow it to warm up for about 10 minutes.

(d) Connect the hoses to the aircraft.

(e) Select either test stand reservoir or aircraft reservoir as the source of hydraulic fluid.

(f) Apply pressure, perform the task, and monitor the control panel.

(g) Reverse these procedures to shutdown and stop the test stand.

(5) Inspection. Detailed inspection requirements can be found in the applicable maintenance manual. The following operator inspections should be made before using the D5 hydraulic test stand.

(a) Fuel tank and hydraulic reservoir. Check fluid levels and refill as required.

(b) Control panel. Check for security of handles and free movement of controls. Push press-to-test indicators; replace indicator lamp if necessary.

(c) Engine. Check oil level.

(d) Battery. Check electrolyte level.

(e) Trailer. Check tire pressure. Check handbrakes lever for proper operation.

(6) Maintenance. Consult the applicable maintenance manual for scheduled and preventive maintenance requirements.

d. *Aircraft jacks*. Aircraft jacks consist essentially of a pump assembly, a cylinder and ram assembly, and a base assembly. Depending on the design and lifting capacity of the jacks, the base assembly can be flat or a tripod style, mounted on casters.

(1) Purpose. Aircraft jacks are designed to raise the entire aircraft or a specific portion of the aircraft so that maintenance can be performed. Jacks come related with different lifting capacities, ranging from 3 tons to over 25 tons.

(2) Principles of operation. A generalized jack hydraulic schematic diagram is shown in figure 9-6. The pump handle is moved up and down to raise the cylinder and rams. On the up stroke of the pump handle, the pump piston draws hydraulic fluid from the reservoir. On the down stroke, the piston pushes the hydraulic fluid under pressure through the spring-loaded check valve

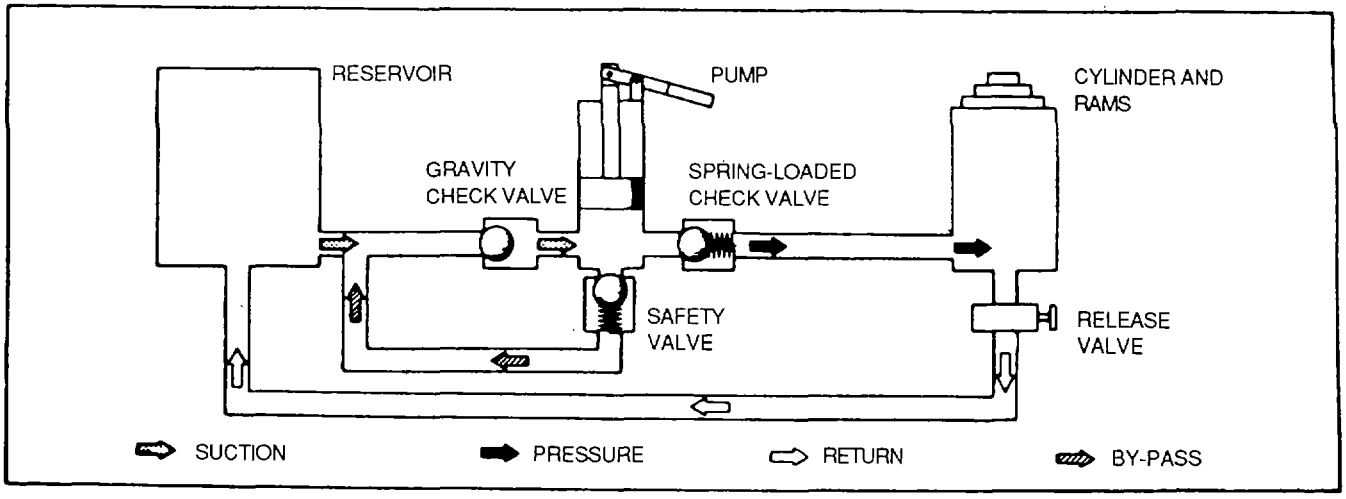

Figure 9-6. Jack Hydraulic Schematic Diagram

into the cylinder. As more fluid is pumped into the cylinder, the fluid pushes the rams upward. By opening the release valve, pressure is released and the rams retract. The safety valve becomes operative when the load to the rams exceeds the maximum allowable load of the jack.

(3) Types. Aircraft jacks vary by weight lifting capacity, style of assembly, and intended use. Two common styles of jacks are tripod and flat base. Aircraft jacks with weight lifting capacities from 3 to 12 tons will be described in the following paragraphs.

(a) Tripod jack, 12-ton. The 12-ton tripod jack, shown in figure 9-7, will lift 24,000 pounds vertically. It has a closed height of 14 inches and a lift of 23 inches. The casters depress and the jack rests on 3 feet when a load is applied.

(b) Tripod jack, 5-ton. The 5-ton tripod jack, shown in figure 9-8, will lift 10,000 pounds vertically. The jack is designed to provide 5 tons of lifting effort through a range of 23-9/16 inches collapsed to approximately 75-9/16 inches when fully extended. The spring-loaded casters retract when under a load.

(c) Tripod jack, 3-ton. The 3-ton tripped jack, shown in figure 9-9, will lift 6,000 pounds vertically. It has a closed height of 14 inches. The tripod legs are equipped with swivel castered wheels. Until a load is applied to the jack, a spring-loaded yoke and spindle keeps the base of the jack foot assembly about 2 inches from the grounds.

(d) Aircraft landing gear jack. The aircraft landing gear jack, shown in figure 9-10, will lift 10,000 pounds vertically. It has a collapsed height of 5 1/2 inches and a lift of 9 inches from the rams. When fully extended, the extension screwlift provides another 3 inches of lift.

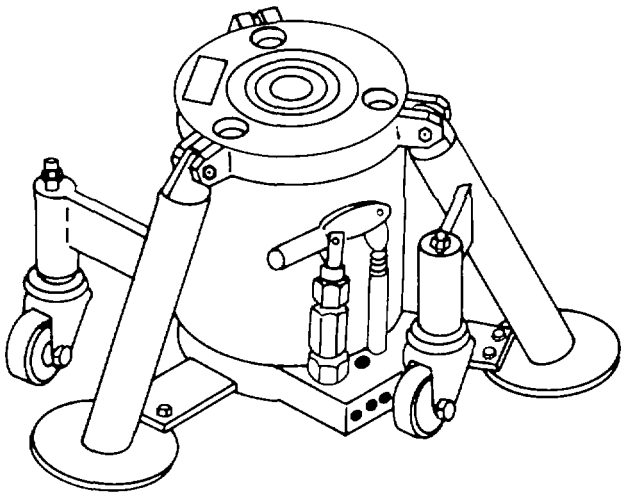

Figure 9-7. Tripod Jack, 12 -Ton

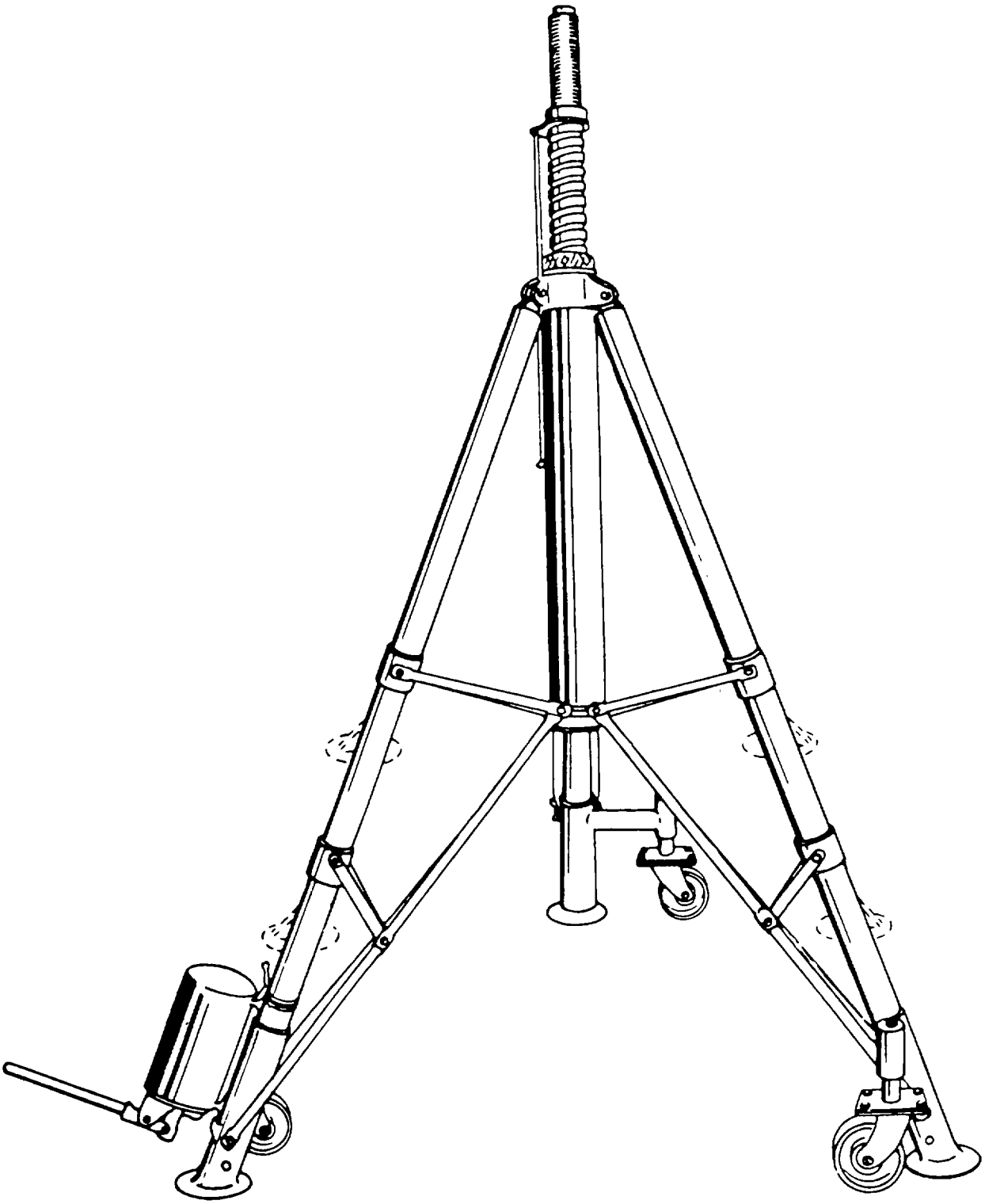

Figure 9-8. Tripod Jack, 5-Ton

(e) Self-contained jack, 10-ton. The 10-ton self-contained jack, shown in figure 9-11, will lift 20,000 pounds vertically. The rams provide 13 inches of lift, with another 4 inches available from the extension screw lift. The overall height ranges from 8 inches collapsed to 25 inches fully extended.

(4) Safety practices and procedures. The following special precautions should be observed when using aircraft jacks:

- Do not try to adjust or defeat the safety valve.
- If the jack will not raise the aircraft high enough, get a jack that will. Do not use a block of wood or similar object to get more lift.
- Use the safety locks, if equipped. Lower the ram locknut as the ram is extended.
- Keep fingers from between the ram locknut and the cylinder assembly.
- Clean the area under the aircraft before lowering and then lower slowly.

(5) Operating procedures. Detailed operating procedures are found in the applicable maintenance manual. The following general procedures pertain to the operation of the aircraft jack:

(a) Close the release valve and partially open the vent assembly vent screw.

(b) Be sure the jack is seated or resting on a level foundation.

(c) Partially raise the ram with the jack handle.

(d) Position the jack.

(e) If necessary, partially screw out the extension screw to contact the load.

(f) After jack is firmly positioned, operate the jack handle with long, smooth strokes until the load is lifted.

(g) To lower the jack, slowly open the release valve and slowly lower the load.

(h) Withdraw jack when the load supports itself.

(i) Lower the extension screw.

(j) Close and tighten the release valve.

(k) Close the vent assembly vent screw.

(6) Inspection. The following general operator inspections should be made on aircraft jacks. Detailed inspection requirements can be found in the applicable maintenance manual.

(a) Visual inspection. Look over the entire jack for obvious discrepancies such as leaks, loose or missing hardware, and loose hose connections, if applicable.

(b) Oil level. Check reservoir and refill as necessary.

(c) Leaks. Check the pump assembly, ram and cylinder assembly, and hose connections, if applicable, for signs of leaks.

(d) Foot assemblies (if applicable). Check the casters for free movement, rotation, and condition of the tread.

(7) Maintenance. Consult the applicable maintenance manual for preventive and scheduled maintenance requirements.

e. Engine Trailer. The engine trailer, shown in figure 9-12, is a 4-wheeled, towable trailer with two rails mounted on it. Various engines can be loaded on and transported by using different adapters.

(1) Purpose. The engine trailer transports engine for and during engine maintenance. It can be loaded and unloaded by sliding the load to or from another trailer, can also be towed together with other trailers.

(2) Rail trailer airmobile. The tiedown rings on the engine trailer make it suitable for air transportation with an engine loaded on it. The 2,500 pound load capacity allows the majority of Army aircraft engines to be transported .

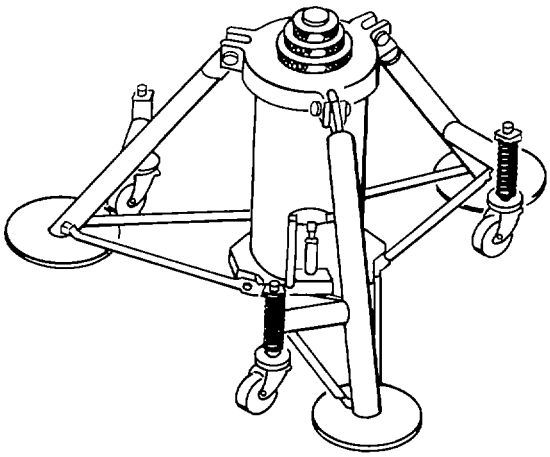

Figure 9-9. Tripod Jack, 3-Ton

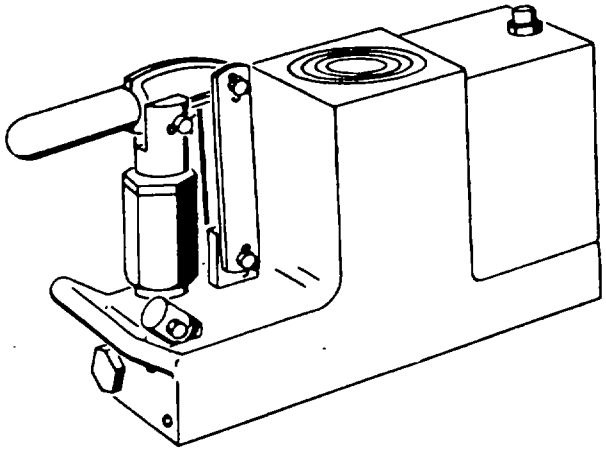

Figure 9-10. Aircraft Landing Gear Jack

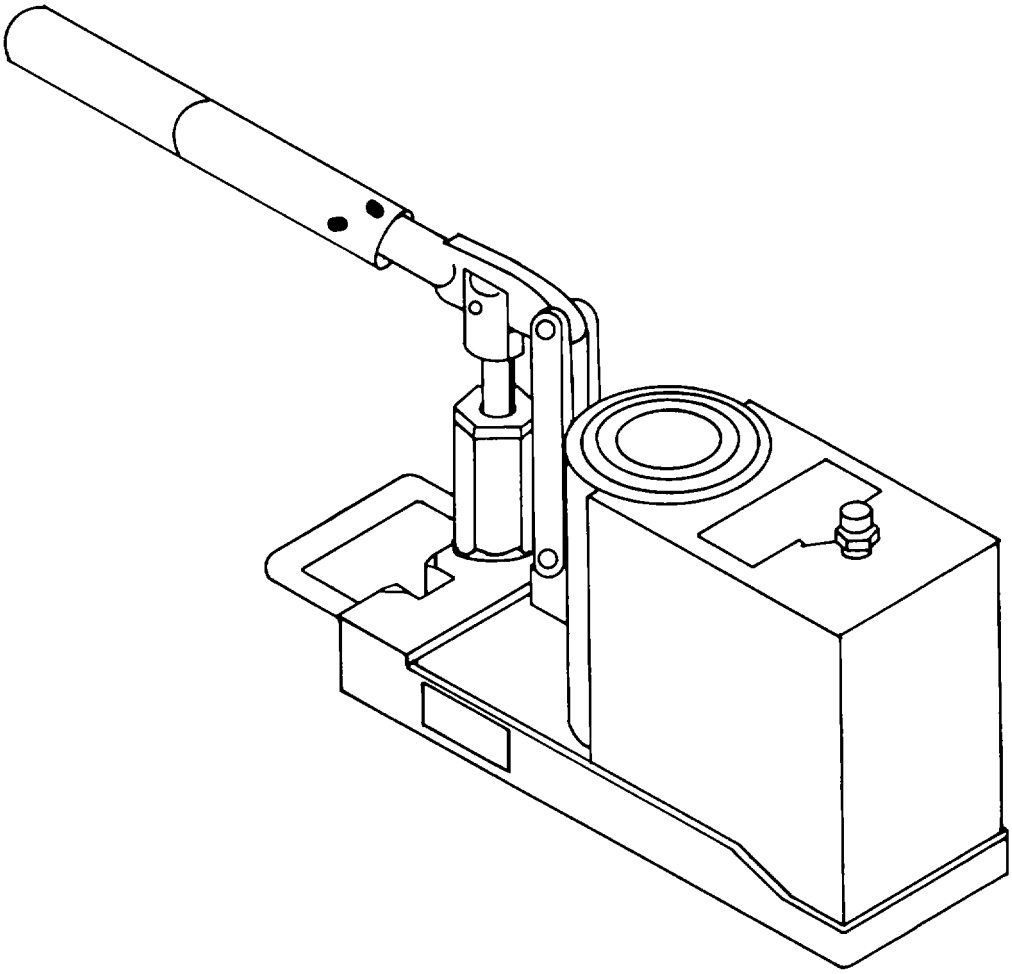

Figure 9-11. Self-Contained Jack, 10-Ton

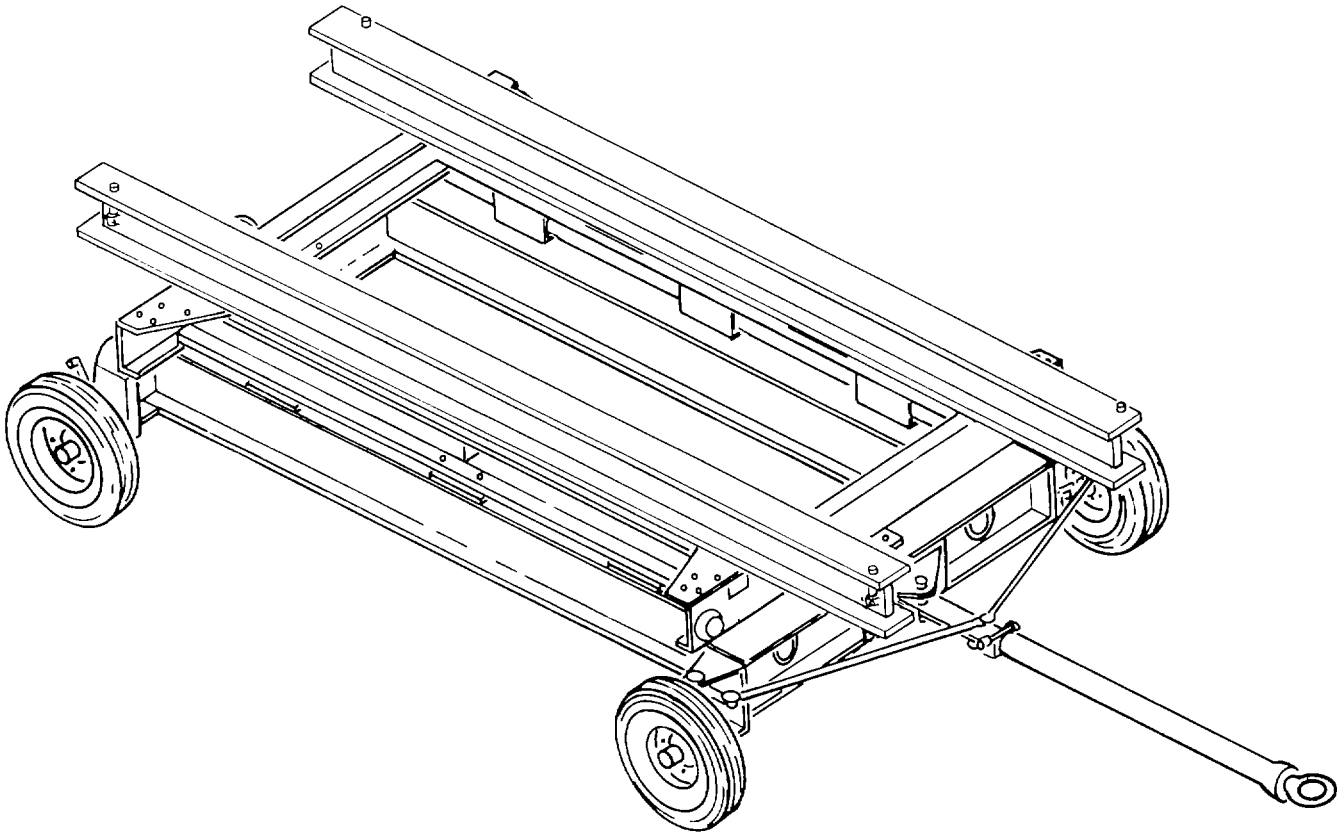

Figure 9-12. Engine Trailer

(3) Principles of operation. The rails on the trailer can be mounted two ways, either 30 or 48 inches apart. There are rail stop assemblies at both end of each rail to prevent the load from sliding off. The rail stops are spring-loaded to the up position. The towbar allows the engine trailer to be moved by a tow vehicle. The pintle hook on the rear of the trailer permits the trailers, to be joined together for towing by a single tow vehicle. Two brake assemblies which are set by depressing the pedal assemblies are located at the right and left rear axles. The brakes prevent the trailer from rolling when parked or while being loaded or unloaded. The front wheels are steerable by using the towbar.

(4) Safety practices and procedures. The following special precautions should be observed while using the engine trailer:

- Do not put fingers on the rails when sliding loads on or off.
- Set the brakes so the trailer does not roll.
- Do not tow the trailer faster than 20 mph. Remember that the momentum of a loaded, moving trailer will try to keep the trailer moving.

(d) When towing two or more engine trailers together, allow for a decreasing turn radius.

(5) Operating procedures. The following procedures pertain to the operation of the engine trailer:

(a) Move the trailer into position for loading. The trailer may be moved and steered by hand if fine adjustments to positioning are required. Set the brakes.

(b) Install the load.

(c) Position the load to keep the center of gravity at the midway point between the axles.

(d) Secure the load to the rails. Also, check that the rail stop assemblies are up.

(e) Connect the trailer to a tow vehicle.

(f) Release the trailer brakes and tow the trailer to the work site.

(g) Set the trailer brakes and unhook the trailer.

(h) To unload by sliding the load off, release the securing device and slide toward the rail ends.

(i) Pull the rail stop assemblies down when the load is near the stops and ready to the unloaded.

(j) Slide the load off.

(6) Inspection. Detailed inspection requirements can be found in the applicable maintenance manual. The following general operator inspections should be made on the engine trailer.

(a) Visual inspection. Look over the entire trailer for obvious discrepancies, such as loose or missing hardware or flat tires.

(b) Tires. Visually check for apparent correct pressure. If in doubt, check with a gauge.

(c) Brakes. Check that they set and release without sticking.

(7) Maintenance. Consult the applicable maintenance manual for scheduled and preventive maintenance requirements.

(8) Adapters available. The adapters that can be used with the trailer allow it to be used with many different types of engines. Consult the applicable maintenance manual for the engine repaired locally.

f. Aviation Ground Power Unit. The aviation ground power unit, shown in figure 9-13, is a gas turbine engine-driven, wheel mounted, self-propelled (up to 3 mph on flat surface), enclosed unit. The APGU can be towed (20 mph maximum), and is air transportable.

(1) Purpose. The aviation ground power unit provides ac/dc electrical, hydraulic, and pneumatic power. Power is available individually, or in any combination. The AGPU provides the ground power requirements for aircraft.

(2) Principles of Operation. Control and regulation of the AGPU electrical and pneumatic systems is semiautomatic. Electronic devices monitor and regulate electrical voltage, frequency, and current; as well as pneumatic outputs. Control of the hydraulic system is semi-automatic, in that the operator must set hydraulic pressure, and select operating modes.

(a) Engine/Gearcase. The gas turbine engine (GTE), provides pneumatic power, and shaft power to drive an ac/dc generator and a hydraulic pump. The generator and pump are mounted on pads on the gearcase. Once started, the engine runs up to 100 percent governed speed of 58,737 rpm, and automatically maintains that speed until shutdown. Engine air intake is through an air cleaner/duct assembly to the engine. Engine exhaust is through an exhaust ejector, and out the roof through an exhaust flapper.

(b) Starting system. The accumulator of the mobile servicing unit is filled with a nitrogen precharge. The hand pump, acting on hydraulic fluid drawn from the reservoir, builds up pressure in the accumulator for the initial diesel engine start. When the start valve is depressed, the pressurized fluid flows to the inlet of the starting motor to crank the engine. The fluid then returns to the reservoir. The accumulator charging pump pumps hydraulic fluid from the reservoir to charge the accumulator after the engine has started.

(c) Propulsion System. The propulsion system provides suspension, steering, brakes, and drive power for the AGPU. A speed/direction control assembly mounted on a tow bar allows the operator to control the forward/reverse directions and speed (up to 3 mph on flat surface)in self-propulsion mode. The tow bar is also used to steer the AGPU when using self-propulsion mode. Drive power is provided by a dc traction motor driving a conventional rear axle assembly. An electric brake assembly is provided. The electric brake prevents the rear wheels turning with the clutch engaged until electrical power is applied to the traction motor and electric brake. Application of dc drive power to the traction motor is controlled by a motor controller and relays located on the upper tray in the electrical compartment. The motor controller receives signals from the speed/direction control assembly. The drive train consists of a gear box, a chain drive, a manual clutch, and a rear axle assembly. A dead man switch on the speed/direction control assembly must be held in while operating the propulsion system. If the switch is released (intentionally or accidentally)during operation,

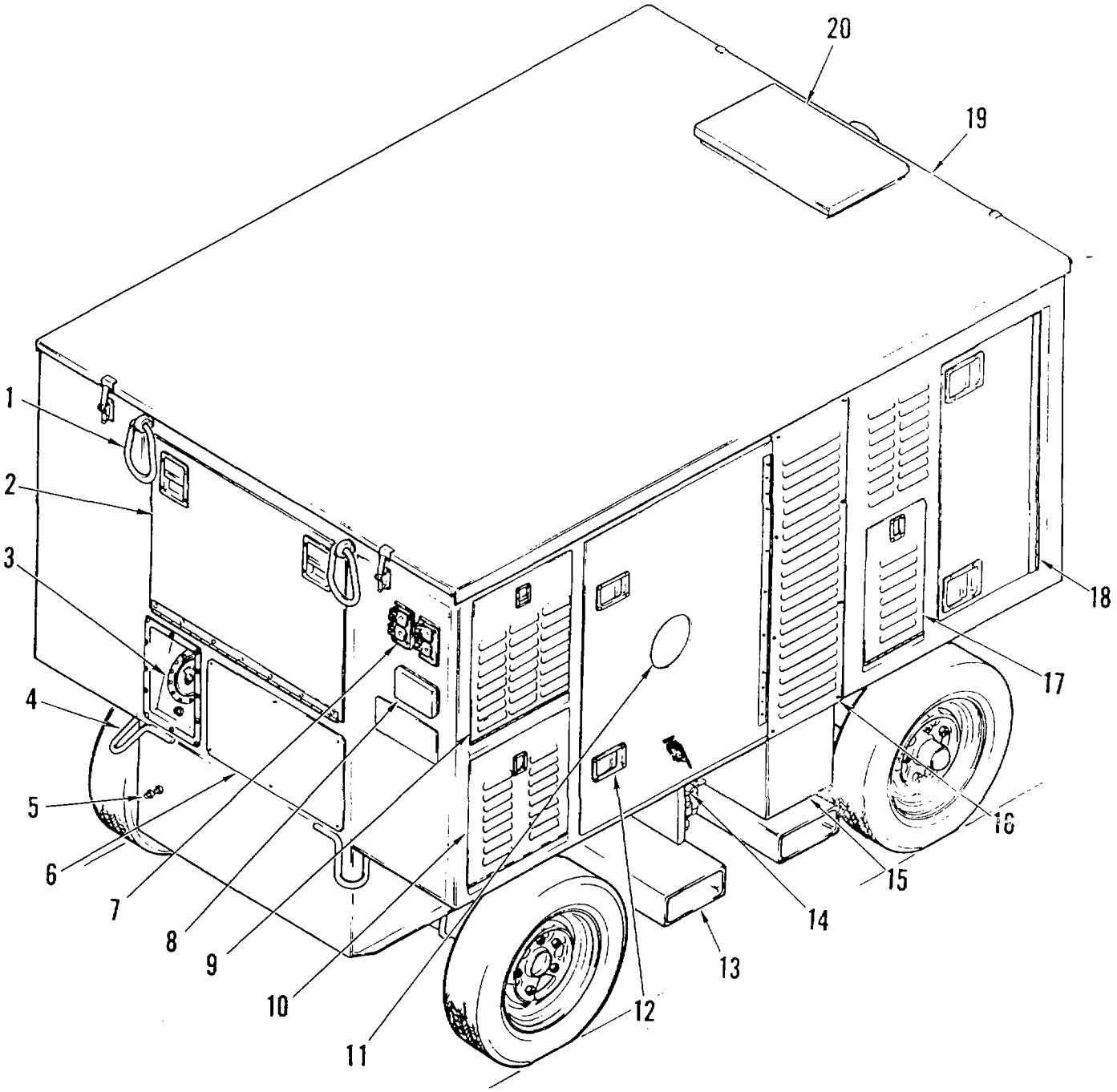

1. LIFTING EYE (4)
2. ACCESS DOOR, CONTROL PANEL
3. FUEL FILL
4. TIEDOWN (4)
5. GROUND STUD
6. ACCESS COVER, BATTERY CHARGER
7. CONVENIENCE OUTLETS (400 HZ)
8 SLAVE RECEPTACLE
9. ACCESS DOOR, ELECTRICAL TRAYS
10. ACCESS DOOR, BATTERY
11 ACCESS DOOR, ENGINE PRE-HEAT
12. ACCESS DOOR, ENGINE
13. FORKLIFT POCKET (2)
14. COVER, AUX FUEL PUMP/FILTER
15 COVER, AIR CLEANER EXHAUST
16. COVER, AIR INTAKE
17. ACCESS DOOR, HYD FILTERS
18. ACCESS DOOR, HYD CONTROL PANEL
19 ROOF
20. EXHAUST FLAPPER

Figure 9-13. Aviation Ground Power Unit

power is removed from the traction motor and the electric brake. Removing electrical power applies the electric brake. Additionally, the speed/direction control assembly contains a mercury switch which deactivates the propulsion system when the tow bar is raised. Conventional drum brakes are provided by the rear wheels. The brakes are set by a lever on the front of the AGPU, which is connected to the brake assemblies by a cable assembly.

(d) Hydraulic System. The hydraulic system consists of a hydraulic pump, interconnecting lines and hoses, and a hydraulic module. The hydraulic pump is mounted on an engine gearcase pad, and is driven by the engine. The hydraulic pump output pressure is controlled by a switch on the hydraulic control panel. The hydraulic module controls the application of hydraulic fluid to an aircraft for power, fueling, or flushing requirements. The hydraulic module contains a control panel, a reservoir, an accumulator, a cooler (heat exchanger), a manifold, filters (2), and hydraulic lines, fittings, and valves.

(e) Generator. The generator is a selfcooled, continuous duty, ac/dc, self-excited, brushless unit. It includes a permanent magnet stator and rotor, an exciter stator and rotor, and a main dc rotating field and ac stator. The main ac stator incorporates three sets of three phase windings. One set of main stator windings provides the 115/200 vac output. The ac outputs of the other two windings are full-wave rectified to provide 28 vdc output. The permanent magnet provides a three phase output whenever the generator is driven by the engine. When the engine reaches 95 percent speed, a relay connects the permanent magnet output to the generator control unit (GCU), located behind the control panel. The GCU rectifies this ac voltage to provide dc control voltage for the GC U and dc excitation voltage for the generator exciter field. The exciter provides a three phase output which varies in magnitude with the field excitation. The exciter voltage is half-wave rectified and applied to the generator main dc rotating field. The magnitude of the three phase voltage generated in the main stator windings is a function of the ampere turns of the field windings which is, in turn, a function of the exciter field excitation. The GCU monitors the generator ac or dc output (depending upon which output is selected at the AGPU control panel) and controls the exciter field as required to keep the selected output within limits.

(f) Pneumatic System. The pneumatic system provides pneumatic power (70 pounds/minute, at 40 psig). The pneumatic system consists of a load control valve (LCV) mounted on the engine, ducts, and a pneumatic hose. An optional deicer kit is supplied with some units. The kit consists of a fifty-foot hose assembly, a supply valve, and a deicer nozzle assembly. The supply valve connects to a normally capped outlet on the left interior bulkhead of the AGPU.

(3) Safety practices and procedures. The following special precautions should be observed when using the aviation ground power unit.

- Depressurize the hydraulic hoses before connecting or disconnecting them.
- Be aware of the hazards associated with a fluid in a hose under high pressure.
- Check for foreign matter before connecting hydraulic hose.
- Never attempt to connect or disconnect power cables to/from aircraft with power applied, or without a proper ground on the APGU ground stud and aircraft.
- A ground guide is required when operating AGPU in reverse.
- Remain clear of downgrade side of AGPU if operating on a slope.

(4) Operating procedures. For detailed instructions, consult the applicable maintenance manual.

(5) Inspection. The following general operator inspections apply to the aviation ground power unit. Detailed inspection requirement are contained in the applicable maintenance manual.

(a) Liquid Levels. Check the gas tank, reservoir, and crankcase for proper levels, refill as required.

(b) Brakes. Check operation of handbrake lever and cable.

(c) Tires. Check for proper inflation, cuts and damage.

(d) Leaks. Check for fuel, engine oil and hydraulic fluid leaks.

(e) Ground Stud. Inspect ground stud for secure mounting.

g. Air Compressors. Air compressors, shown in figure 9-14, are portable sources of compressed air. They are self-contained and mounted on a two or four wheel trailer frame.

(1) Purpose. An air compressor is designed to continuously deliver a rated volume of air at a rated pressure. Depending upon the flow (rated in cubic feet per minute or cfm) and the pressure (rated in pounds per square inch or psi), an air compressor provides air for the following uses:

- Operation of pneumatic tools, greasing equipment, paint spray guns, and for tire inflation.
- Supply air to charge aircraft pneumatic systems, hydraulic accumulators, oleo struts, and tires, and for servicing the trailers that will be used for these purposes.

(2) Types. Air compressors are typed by the maximum flow and pressure they can produce. Generally, the low pressure compressors provide up to 175 psi and are used for pneumatic tools, spray guns, greasing equipment, and so forth. The high pressure compressors produce pressures of 3,000 to 3,500 psi. These are used for tasks such as charging accumulators, struts, and pneumatic systems on aircraft. The external appearance of types may vary by model number or manufacturer. The air compressors shown in figure 9-14 are typical of those found in maintenance organizations.

(3) Principles of operation. Air compressors have a gasoline engine which drives the compressor, either by a belt or through a clutch. The compressor has low and high pressure cylinders. Air is drawn into the low pressure cylinder through the air filter and delivered to the high pressure cylinder through the intercooler coils. The compressed air then goes through a check valve to the receiver tank. The check valve prevents back flow.

(4) Safety practices and procedures. The following special precautions should be observed when using air compressors:

- Do not use low pressure hoses (300 psi) on a high pressure compressor (3500 psi).
- Do not use the air compressor in an enclosed area due to possible carbon monoxide poisoning.
- Do not try to override or defeat the pressure relief valves.
- Do not refuel the compressor when the engine is hot.
- Leave all safety devices (e.g. belt guard) in place.

(5) Operating procedures. Consult the applicable maintenance manual for the type and model air compressor being used for specific instructions. The following general procedures pertain to the operation of the air compressor:

(a) Locate the compressor near the work site.

(b) Set the brake.

(c) Open the siphon valve on the receiver and close the shutoff valve on the control panel.

(d) Start the engine.

(e) When the pressure reaches operating pressure, open the shutoff valve.

(f) Adjust the pressure as required and use the compressor.

(g) For shutdown, close the shutoff valve and position the ignition switch to off.

(h) When the engine stops, open the siphon valve and drain the water accumulation.

(6) Inspection. The following general operator inspections apply to air compressors. Detailed inspection requirements are found in the applicable maintenance manual.

(a) Liquid levels. Check the engine and compressor oil levels, gas tank fuel level, and battery electrolyte level. Service as needed.

(b) Hand or parking brake. Check for proper operation.

(c) Hoses. Look for wear or loose fittings.

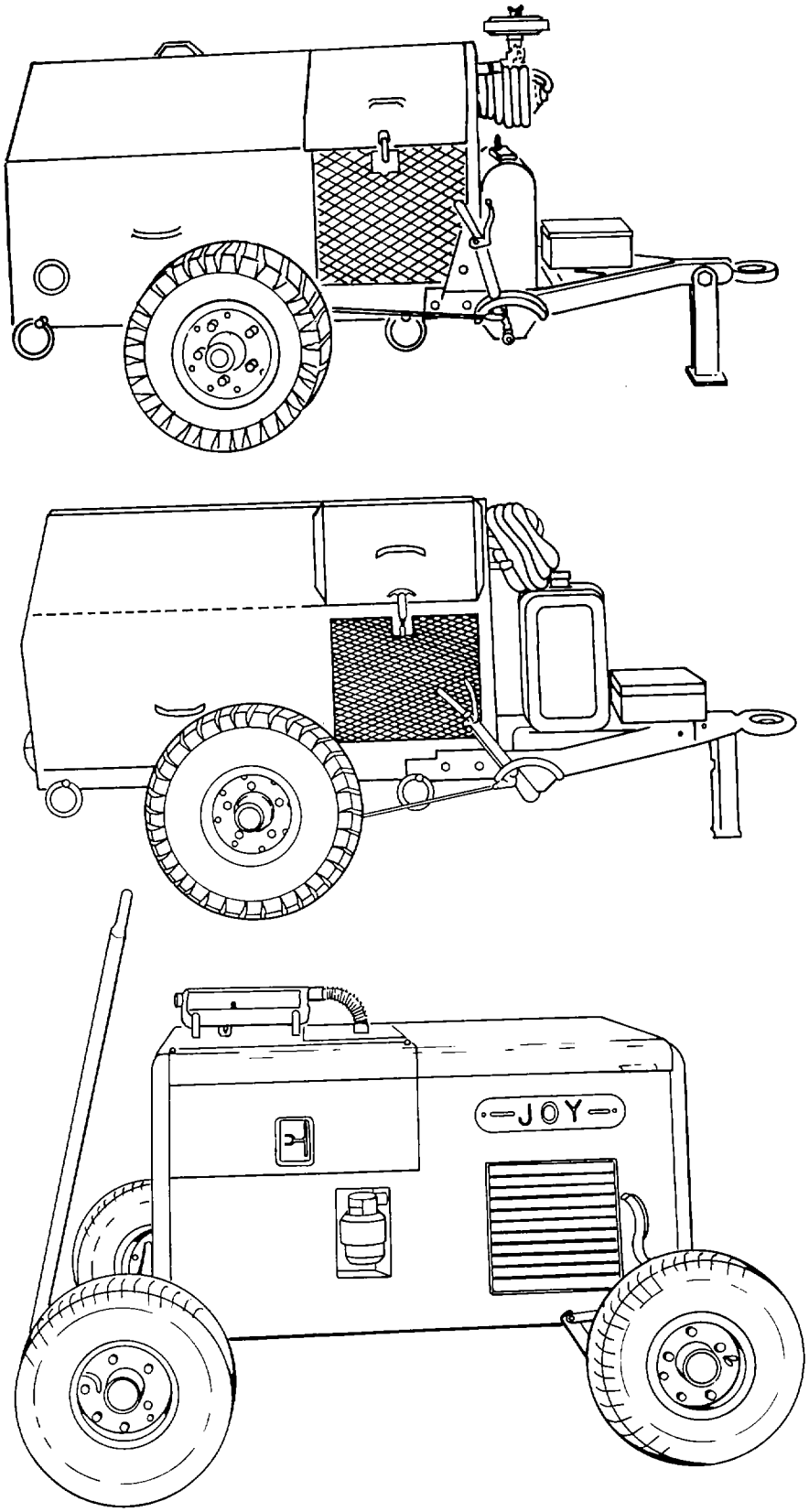

Figure 9-14. Typical Air Compressors

(d) Oil and water accumulation. Open the siphon valve and drain accumulated water and oil from receiver.

(7) Maintenance. Consult the applicable maintenance manual for scheduled and preventive maintenance requirements.

h. Aircraft Preheater. The aircraft preheater, shown in figure 9-15, will deliver 40,000 to 400,000 BTUs/hour within the specified operating condition limits. The preheater will deliver uncontaminated air with a regulated discharge air temperature of 150 to 280°F (66 to 138°C)at an adjustable air delivery rate of 435 to 815 cfm. Flexible ducts are used to direct the heated air where it is needed.

(1) Purpose. The aircraft preheater is specifically designed to preheat aircraft engines, cockpits and cabins when the aircraft is in cold weather areas. It is often used to provide heat to aircraft repairers as they perform outdoor maintenance in the winter.

(2) Principles of operation. The aircraft preheater has a prime mover assembly and a heat generator assembly.

(a) Prime mover assembly. The prime mover is either a gas engine or an electric motor which drives afan, a fuel pump, and a magneto. The fan moves the air to be heated through the heat exchanger section of the heat generator and also supplies the air for combustion. The fuel pump supplies fuel for combustion in the heat generator and to run the gas engine. The magneto ignites the combustion fuel and air mixture in the combustion portion of the heat generator.

(b) Heat generator assembly. Through the medium of a heat exchanger, the heat generator heats the inlet air with hot gases generated by fuel burned in the combustor. The air and exhaust flow are so arranged that there can be no intermingling of exhaust gases with the heated air.

(3) Safety practices and procedures. The following special precautions should be observed when using the aircraft preheater:

- Do not use inside a structure due to possible carbon monoxide poisoning. Park the preheater outside and run ducting to the inside.
- Periodically look for leaks in the fuel system.
- Locate the unit so that the exhaust does not blow into the inlet door.
- Let the unit cool down before refueling.
- Be sure the exhaust stack extension is in place.
- Ensure all outlet and inlet access doors are open.

(4) Operating procedures. Consult the applicable maintenance manual for detailed instructions. The following general procedures pertain to the operation of the aircraft preheater:

(a) Position the preheater so that the wind blows the exhaust away from the air inlet opening.

(b) Open the air inlet canopy door, air outlet doors, access doors, and the exhaust stack door.

(c) Connect the flexible duct and position it as needed.

(d) If using the gas engine prime mover, start the engine. If using the electric motor prime mover, plug it in to a power source, normally 115 vac, and turn switch on.

(e) Regulate the heat by using the temperature selector valve.

(f) To stop the preheater, pull the burner fuel knob to stop the combustor fire. Allow the prime mover to run for about 2 minutes for cooling purposes.

(g) Stop the prime mover by pressing the stop switch button on the gas engine or by turning the switch on the electric motor to off.

(5) Inspection. The operator should perform the following general inspections before using the aircraft preheater. Detailed inspection requirements are found in the applicable maintenance manual.

(a) Gas tank. Check the level and refill as necessary.

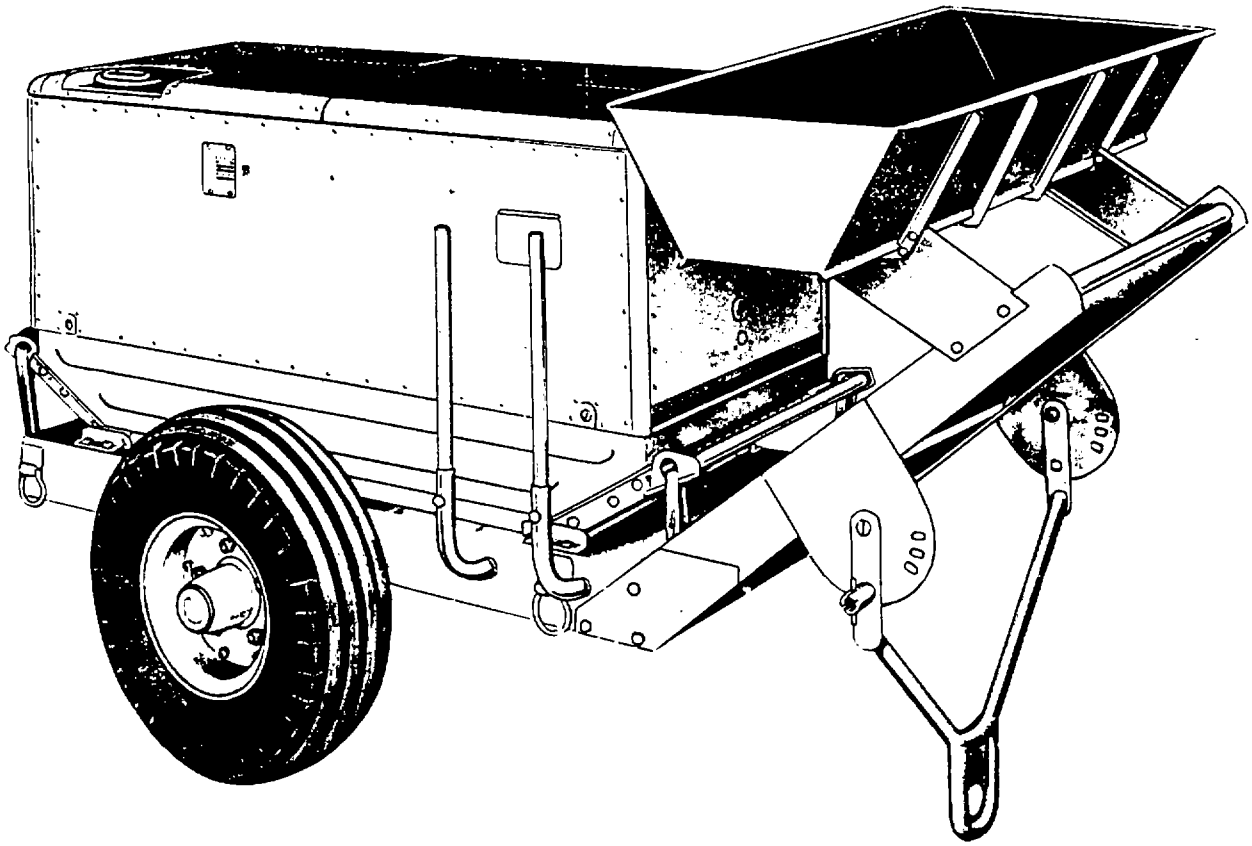

Figure 9-15. Typical Aircraft Preheater

(b) Leaks. Check for leaks in the fuel system. Look for gas on top of the tank.

(c) Tires. Check for cuts and proper inflation.

(6) Maintenance. Consult the applicable maintenance manual for preventive and scheduled maintenance requirements.

i Towbar. A towbar, show in figure 9-16, is used for ground movement of aircraft. It can be attached to gear struts, axles, and helicopter skids. A towbar has two round or rectangular tubes which are joined at one end by a steel pivot plate and lunette eye. The lunette eye attaches to the tow vehicle. The other ends of the tubes contain the aircraft attachment fittings and wheels with solid rubber tires for towing the towbar when empty.

(1) Purpose. The towbar is designed to aid in ground handling of aircraft by providing a link between the aircraft and a tow vehicle. There are two basic classes of towbars: the universal and the special. The universal towbar will accommodate several different models of aircraft. The special towbar is designed for use with only one model of aircraft.

(2) Principles of operation. The towbar is attached to the aircraft by hooks which fit towing rings on the aircraft or by pins which fit in landing gear axle holes. The hooks are held in place in the towing rings by spring-loaded locking pins. The axle pins are held in the towbar by quick-release pins.

(3) Safety practices and procedures. The following special precautions should be observed when using a towbar:

- Take extreme care when putting the lunette assembly in the pintle hook to avoid pinched fingers.
- Be sure the correct towbar is being used.
- Do not use a towbar that is defective.

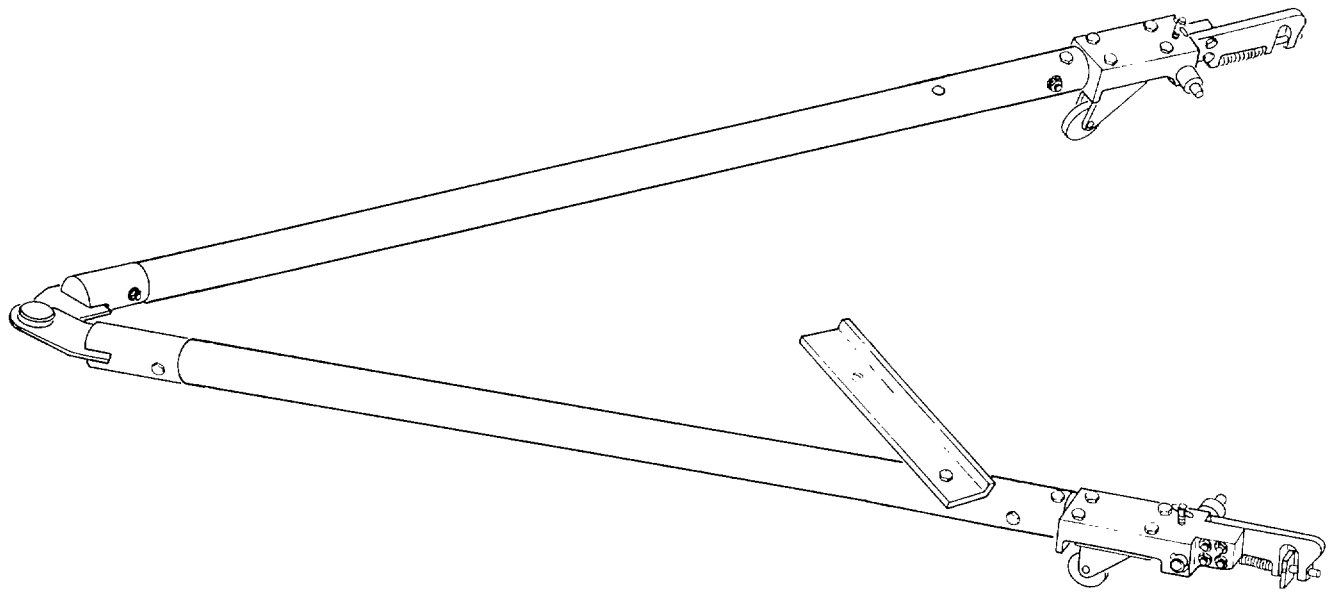

Figure 9-16. Towbar

- Do not tow a towbar unless the arms are secured properly.

(4) Operating procedures. Consult the applicable aircraft maintenance manual for detailed guidance. The following general procedures pertain to the operation of the towbar:

(a) Connect towbar to aircraft.

(b) Confirm that attaching pins are properly engaged.

(c) Connect towbar to tow vehicle.

(d) Tow aircraft to desired location.

(e) Disconnect towbar from tow vehicle.

(f) Disconnect towbar from aircraft.

(5) Inspection. The following general operator inspections apply to towbars. Detailed inspection requirements are contained in the applicable maintenance manual.

(a) Visual inspection. Look for broken or loose hardware.

(b) Aircraft attaching devices. Check for proper operation.

(6) Maintenance. Consult the applicable maintenance manual for preventive and scheduled maintenance requirements.

j. Nitrogen Servicing Unit. The two-wheeled, hand truck mounted nitrogen servicing unit, shown in figure 9-17, is used to service aircraft nitrogen systems. The cylinders are restrained on the hand truck by a chain. The controls are mounted on the cylinders. The assembly consists of an air chuck, an adapter and valve, a hose, an air and nitrogen purifier cylinder, and a high pressure oxygen regulator.

(1) Purpose. The nitrogen servicing unit is designed to recharge the nitrogen system installed in an aircraft. The cylinders and flow controlling mechanism can be easily wheeled to the aircraft by one person. The aircraft system can be charged by a flexible hose.

(2) Principles of operation. The cylinders are manifolded together and can be used individually or at the same time. The nitrogen flow is controlled by a shutoff valve. The pressure regulator restricts the outlet

pressure from O psi to the operating pressure of the aircraft system. The outlet pressure is read on a gauge.

(3) Safety practices and procedures. The following special precautions should be observed when using the nitrogen servicing unit:

- Be careful not to knock over the high pressure cylinders.
- Open all valves slowly.
- Do not exceed the aircraft system pressure or quantity limit when servicing.
- Close all valves when moving the hand truck.
- Protect the fittings from contamination.

(4) Operating procedures. Consult the applicable servicing unit and aircraft maintenance manual for detailed instructions. The following general procedures pertain to the operation of the nitrogen servicing unit:

(a) Position the cylinder so the hose is at full length but not stretched.

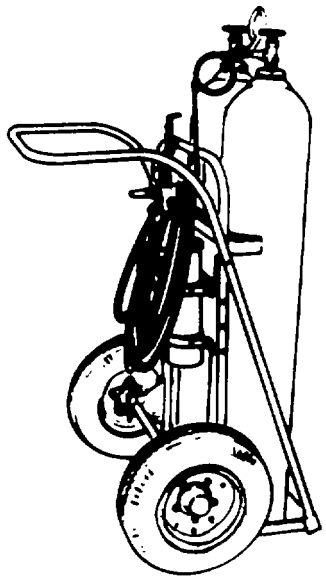

Figure 9-17. Nitrogen Servicing Unit

(b) Determine pressure of system to be serviced.

(c) Open shutoff valve.

(d) Set pressure regulator to correct pressure.

(e) Use hose and service system.

(f) On completion of servicing, close shutoff valve, set pressure regulator to 0 psi, and roll up hose.

(5) Inspection. The operator should perform the following general inspections before using the nitrogen servicing unit. Detailed inspection requirements are in the applicable maintenance manual.

(a) Cylinders. Check for security on hand truck.

(b) Hose and fittings. Check for tightness and leaks.

(6) Maintenance. Consult the applicable maintenance manual for scheduled and preventive maintenance requirements.

k. Hoists. Hoist shown in figure 9-18, can be categorized as fixed height. The fixed height apparatus, normally referred to as a hoist, is made of a welded, tubular steel, truss-type construction. The legs on the hoists are spreadable to straddle the equipment and provide balance while lifting. Casters provide mobility, allowing two people to handle the positioning of the hoist.

(1) Purpose. Hoists are designed to remove and replace aircraft components during scheduled and unscheduled maintenance. These components include engines, transmissions, propellers, rotor blades and rotor hubs. The amount of weight that can be lifted is determined by the type, size of construction and the size of the cable.

(2) Types. Two general types of hoists are described in the following paragraphs.

(a) Manually-operated. On this type of hoist, the winch is operated by hand. It main benefit is the ability to be used at locations where power is not available. Typically, the hoist will lift 5,000 pounds over 20 feet. It must be used on a paved surface.

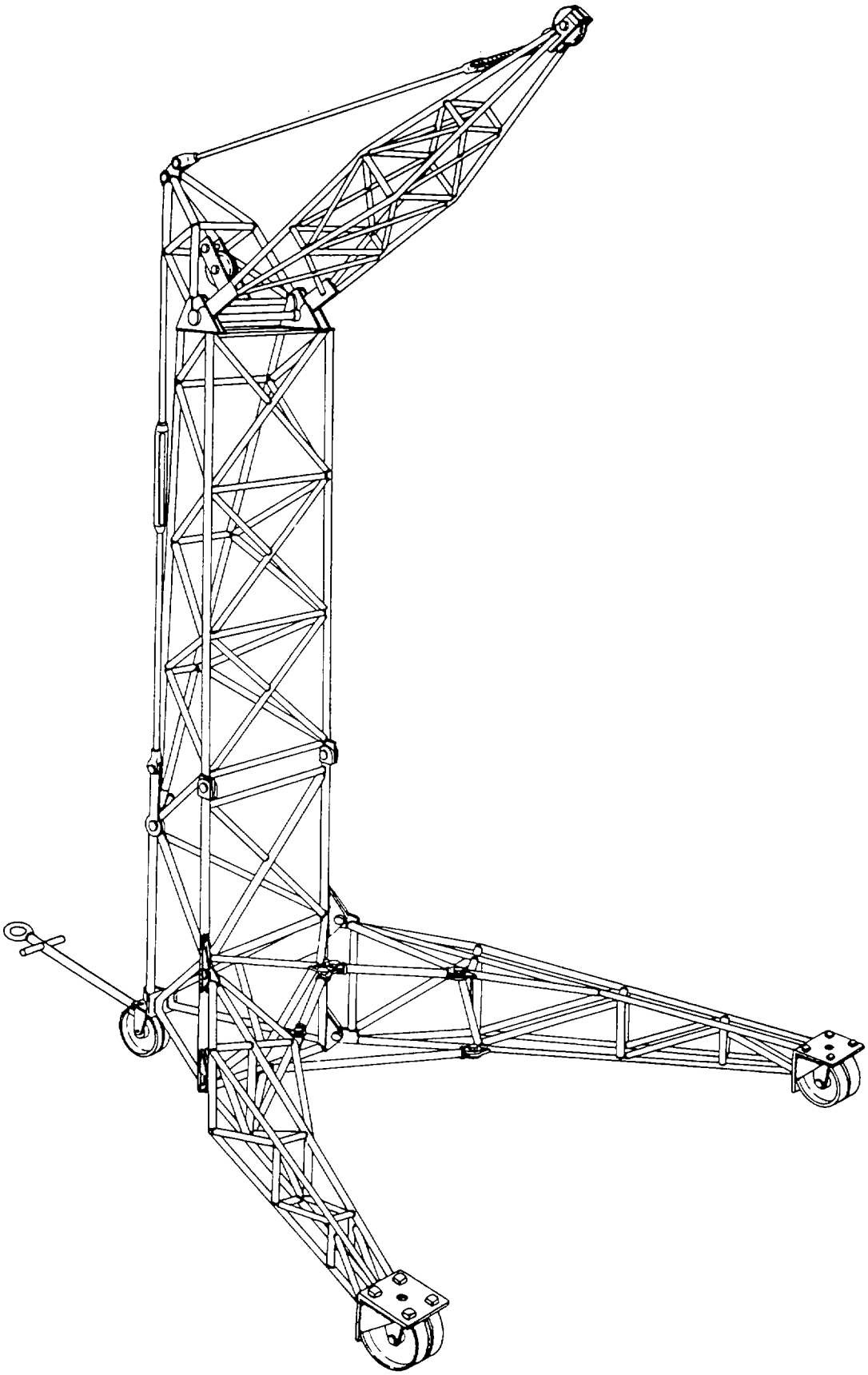

Figure 9-18. Typical Hoists (Sheet 1 of 2)

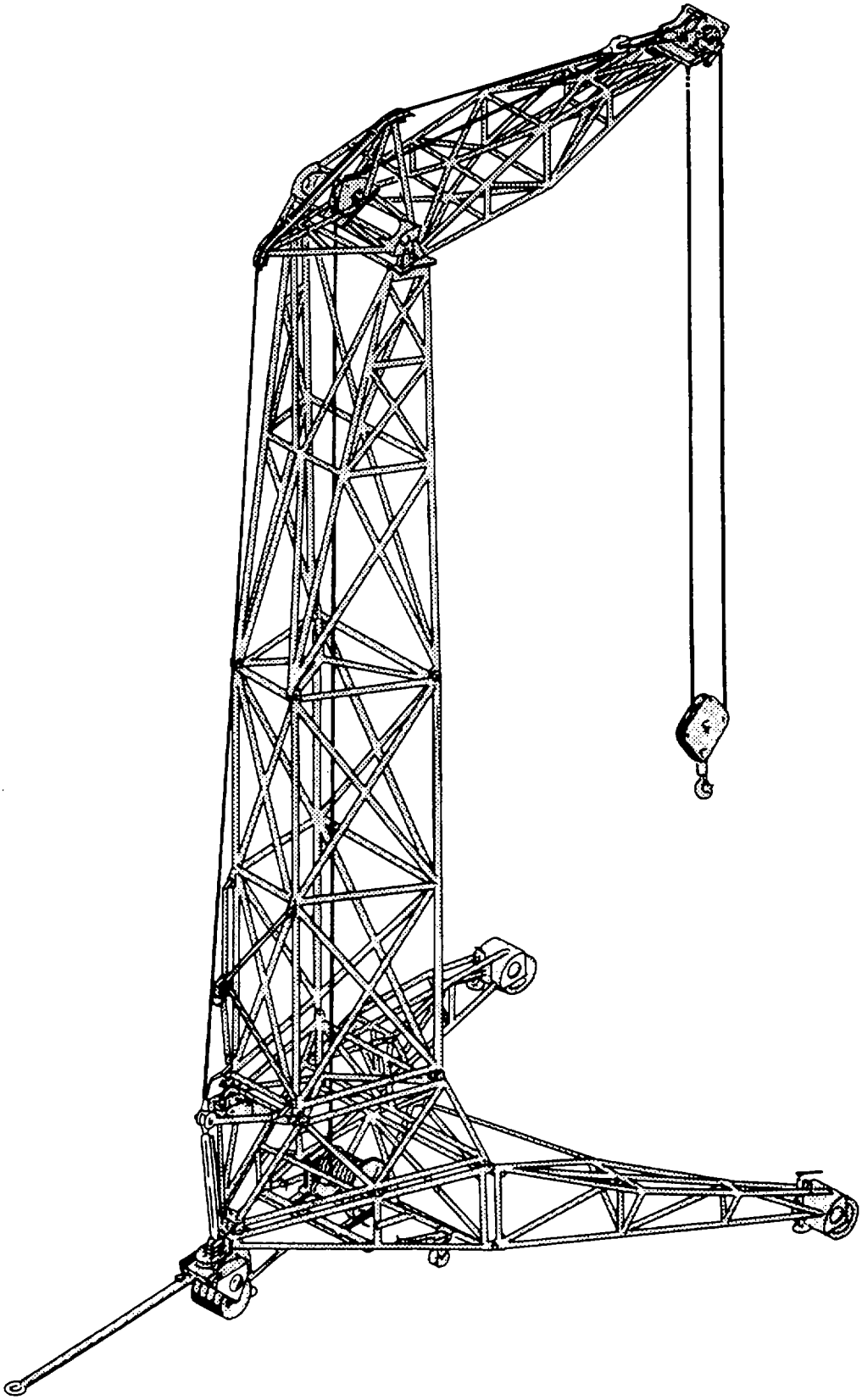

Figure 9-18. Typical Hoists (Sheet 2 of 2)

(b) Electrically-operated. This type of hoist is similar to the manually-operated hoist in lifting capacity and lifting distance. However, it requires an outside source of power, typically 28 vdc to run the electrically-operated winch.

(3) Principles of operation. The topmost pulley is positioned over the object to be lifted. The block which contains a pulley and hook is lowered to the object and connected by means of a lifting adapter, sling, or chain. The cable is wound up on the winch, which in turn raises the block through a system of pulleys. As the lifted object clears the aircraft, the hoist must be moved away from the aircraft before the object can be lowered.

(4) Safety practices and procedures. The following special precautions should be observed when using hoists:

- Do not exceed the lifting capacity of the structure, the cable, or the winch.
- Never stand under a loaded hoist.
- Do not leave a loaded hoist unattached.
- Always use enough people to safely move and control a loaded hoist.
- If using hand signals, be sure each person knows and understands the signals.

(5) Operating procedures. Consult the applicable equipment maintenance manual, aircraft maintenance manual, and local operating instructions or procedures for detailed guidance. The following general procedures pertain to the operation of hoists.

(a) Move the hoist into position.

(b) Stabilize the unit by setting the caster brakes, lowering the leveling pads.

(c) Lower the block to the object to be lifted.

(d) Connect the hook to the object and lift it.

(e) Release the brakes or raise the leveling pads, carefully move the hoist away from the aircraft, and lower the object.

(f) Reinstallation of the object using a hoist requires completion of steps (a) through (d) and (f), except move the hoist toward the aircraft.

(g) On job completion, release the caster brakes or raise the leveling pads and move the hoist away from the aircraft.

(6) Inspection. The following general operator inspections apply to hoist. Detailed inspection requirements are contained in the applicable maintenance manual.

(a) Cable. Look at exposed cable for knots, kinks, corrosion, and broken wires.

(b) Casters. Check for flat spots and swiveling.

(c) Hook. Check safety latch for serviceability.

(d) Pulleys. Check that the cable is in the groove.

l. Pre-Oiler and Pickler. The pre-oiler and pickler, shown in figure 9-19, is capable of delivering a constant supply of corrosion preventive compound (pickling) at 3 gpm and a temperature between 150 and 230°F (66 and 110°C) with a pressure that should not exceed 250 psi. It is also capable of delivering pre-oiling fluid at 3 gpm and a temperature between 150 and 175°F (66 and 79°C) with a pressure of 175 psi. The servicing hose is 25 feet long.

m. Lubricating Equipment. Lubricating equipment, shown in figure 9-20, is commonly called grease guns. Grease guns are used to lubricate various moving parts on an aircraft. This paragraph will cover hand operated grease guns.

(1) Purpose. Grease guns are designed to inject a lubricating substance between two metal surfaces that move against each other. The lubricant is injected through a fitting, designed with a check ball to prevent the lubricant from coming back through the fittings.

(2) Type. The most common type of grease gun is the lever operated. This type of grease gun is cylindrical, holds 14 ounces of lubricant, and requires two hands to operate. The lubricant is spring-primed and is delivered at 6,000 psig.

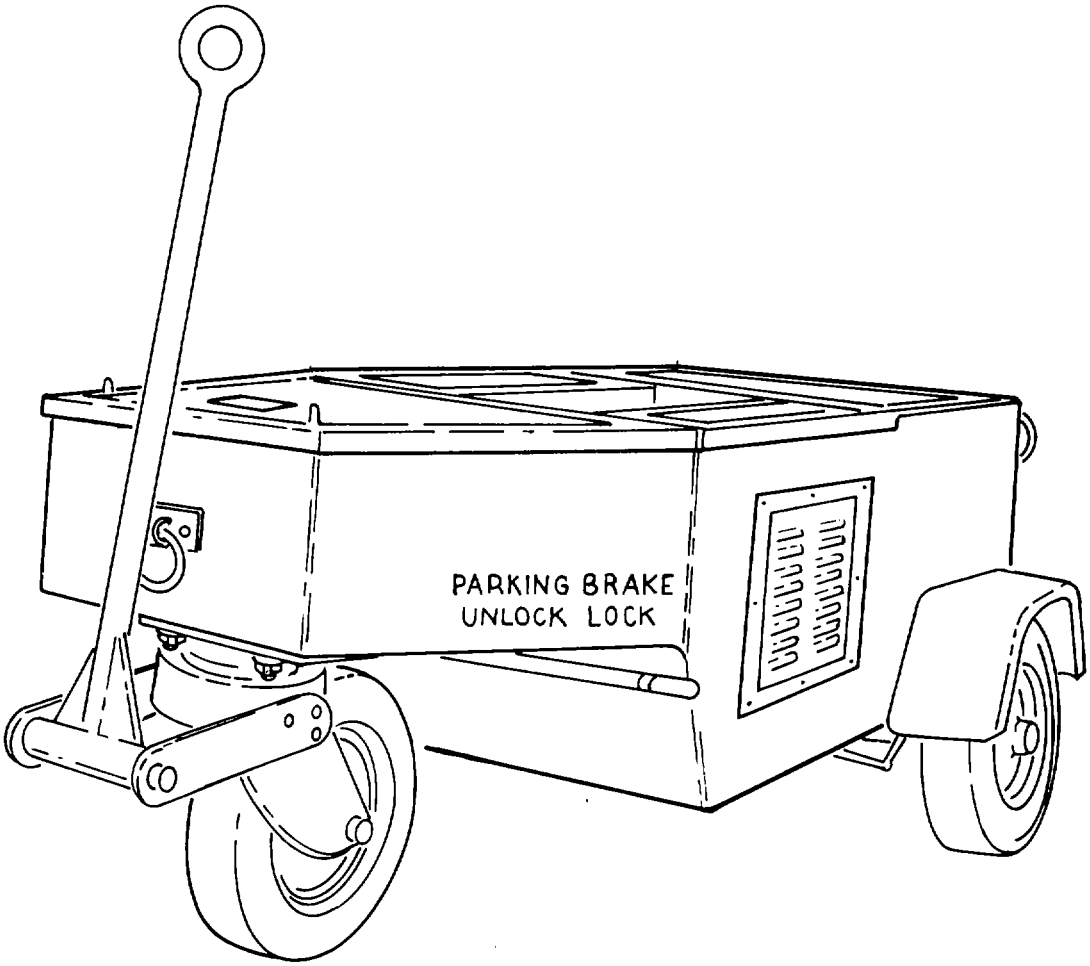

Figure 9-19. Pre-Oiler and Pickler

(a) Hand-operated, level-operated. This type of grease gun is cylindrical, holds 14 ounces of lubricant, and requires two hands to operate. The lubricant is spring-primed and is delivered at 6,000 psig.

(b) Hand-operated, mini-lube. This type of grease gun has a gun-shaped dispensing handle, holds 5 pounds of lubricant, and is operated with one hand. A7 1/2 foot long hose allows the unit to sit on the ground while using the dispensing handle.

(3) Principles of operation. Lubricant in the container portion, under spring-primed pressure, is allowed to fill a chamber as the lever or handle is moved in the fill direction. Moving the lever or handle in the dispense direction forces the lubricant through a hose or tube and out through the coupler. Acheckball prevents the lubricant from returning to the container portion.

(4) Safety practices and procedures. The following special precautions should be observed when using a grease gun:

- Be sure the grease gun contains clean grease of the correct grade and type specified for the job.
- Keep the coupler clean to avoid contamination and introduction of abrasive substances.

(5) Operating procedures. Consult the applicable aircraft maintenance manual for exceptions and special directions. The following general procedures pertain to the operation of the grease gun:

(a) Check the grease gun for the proper lubricant.

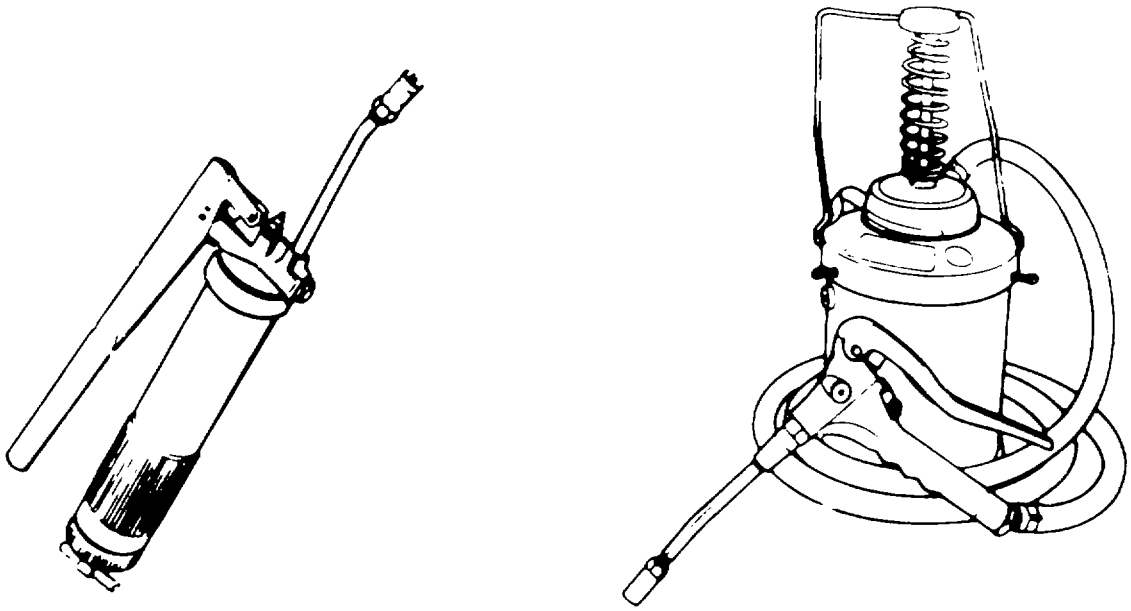

Figure 9-20. Lubricating Equipment

(b) Clean the fitting on the aircraft.

(c) Attach the coupler to the fitting.

(d) Operate the lever or handle until new grease appears at the part being lubricated.

(e) Detach the coupler from the fitting.

(6) Inspection. The following general operator inspections apply to grease guns.

(a) Coupler. Check for cleanliness. Clean as necessary.

(b) Contents. Determine that lubricant, is the proper one for the job. If uncertain, load with correct lubricant or get another grease gun.

(c) Hose. Check for leaks.

(7) Maintenance. Little maintenance can be accomplished on grease guns. Consult the applicable maintenance manual for availability of parts.

n. Aircraft Towing Vehicle. The aircraft tow vehicle, shown in figure 9-21, is used to move an aircraft from one spot to another. A towbar is the connection between the two vehicles and the aircraft.

(1) Purpose. The MB-4 tow vehicle is an all weather tractor which is designed to tow and push aircraft weighing up to 100,000 pounds. The tow vehicle has front wheels only, rear wheels only, coordinated all-wheel, or oblique steering features.

(2) Principles of operation. The tow vehicle is a four-wheel-drive towing tractor. The engine output is transferred through the hydraulic transmission, mechanical transmission, and transfer case to the front and rear axles to provide four-wheel-drive at all times. The hydraulic steering system consists of front and rear steering systems which are independently controlled. The hydraulic brake system provides braking on all four wheels. The electrical system powers all electrical components.

(3) Safety practices and procedures. The following special precautions should be observed when operating the aircraft tow vehicle.

- Be sure there is sufficient air pressure for braking before operating the tractor.
- When towing in a hangar, be alert for the presence of carbon monoxide gas.

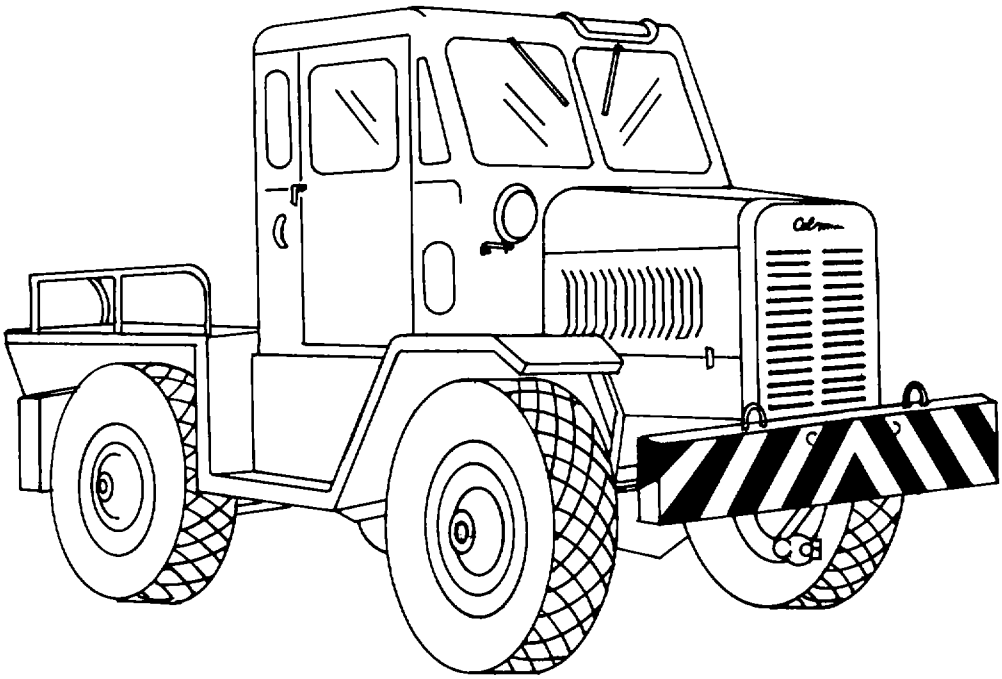

Figure 9-21. Type MB-4 Tow Vehicle

(4) Operating procedures. Consult the applicable maintenance manual for detailed instructions. The following general procedures pertain to the operation of the aircraft tow vehicle:

(a) Set parking brake and place transmission in neutral.

(b) Start engine and allow it to warm up.

(c) Select desired gear for the operation.

(d) Engage clutch, release parking brake, and press on accelerator pedal.

(e) For aircraft towing operation, refer to the respective aircraft Organizational Maintenance Manual for proper towing instructions.

(f) To shut down the tow vehicle, place the transmission in neutral, set the parking brake, and turn the ignition switch off.

(g) Place all other switches in OFF position.

(5) Inspection. The following operator inspections apply to the MB-4 tow vehicle.

(a) Liquidlevels. Check the steering system oil reservoir, gas tank, radiator, and crankcase. Service as necessary.

(b) Tires. Check for proper inflation. Service if needed.

(c) Leaks. Check steering system oil lines, fuel lines, water pump, water hoses, crankcase, and brake lines.

(6) Maintenance. Consult the applicable maintenance manual for preventive and scheduled maintenance requirements.

o. *Universal Wash Unit.* The universal wash unit shown in figure 9-22, is used for aircraft cleaning. The wash unit has two wheels and a single on which the unit is supported and moved about.

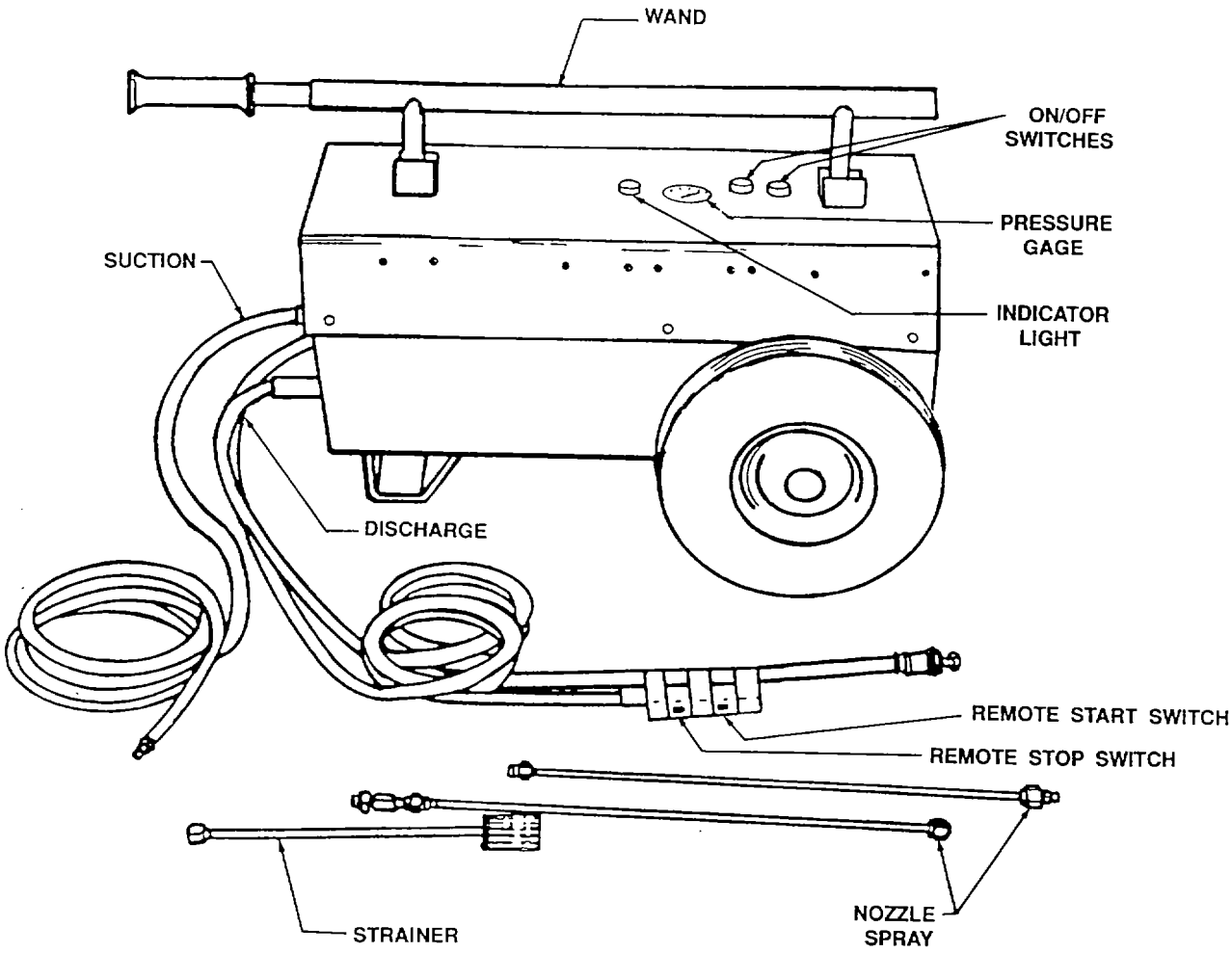

Figure 9-22. Universal Wash Unit

(1) Purpose. The water wash unit is designed to dispense water and cleaning compound. It contains automatic temperature and pressure controls which maintain a constant output of a heated solution at the established pressure.

(2) Principle of Operation. The universal wash unit operates on either 115 volts ac, 50-400 Hz, single phase or 28 volts dc. The wash unit utilizes a power supply, motor driven pump, spray nozzle, strainer/filter and wand. An external cleaning solution supply is connected to the wash unit by the strainer. The motor driven pump will deliver approximately 2.5 gallons of cleaning solution per minute at 30 psig through the wand and nozzle when the wash unit is set to the wash configuration.

(3) Safety Practices and Procedures. The following special precautions should be observed when using the universal wash unit.

- Keep the cleaning compound away from the eyes.
- Do not aim the pressurized water at another person.

(4) Operating Procedures. The following general procedures pertain to the operation of the universal wash unit.

(a) Position the wash unit at the aircraft.

(b) Connect the strainer unit to the intake hose.

(c) Connect the wand and nozzle spray to the output (discharge) hose or connect the discharge quick disconnect to the aircraft wash manifold quick disconnect.

(d) Insert the strainer unit into a container of water or cleaning solution.

(e) Press the start or remote start switch; observe the pressure gage. It should immediately indicate an increase in pressure.

(f) After the pressure reaches approximately 10 psig, release the start switch. The unit should continue to operate.

(g) The unit will deliver approximately 2.5 gallons per minute at 30 psig.

(h) Press the stop or remote switch to stop the unit from operating.

(5) Inspection. General operator inspections for the universal wash unit are contained in the following paragraph. Detailed inspection requirements are in the applicable maintenance manual.

(a) Inspect power cable and connectors for bent or broken connector pins, damaged connector sockets, frayed or cracked insulation and bent or loose connectors.

(b) Inspect suction and discharge hoses for damaged connectors, and cut hose surfaces.

(c) Examine the wand for damaged pipe surface, damaged connectors and connector threads.

f. Portable Power Supply. The portable power supply, shown in figure 9-23, is commonly called an inverter. The unit produces ac power output from dc power input and is approximately 12 inches long, 8 1/2 inches wide, and 4 1/4 inches high. It functions in a temperature range of -65 to +1 60°F (-54 to +7°C).

(1) Purpose. The inverter is designed to convert 28 vdc to 115 vac, 400 Hz, sine wave power at 39 amps.

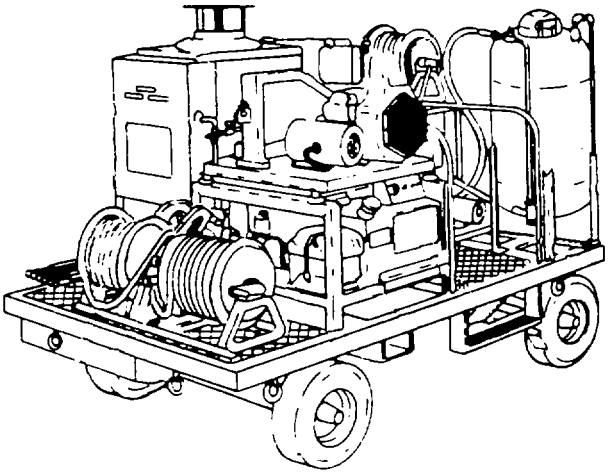

Figure 9-23. Portable Power Supply

(2) Principles of operation. A dc motor drives an ac generator. A solid state voltage regulator controls the voltage output while the speed of the generator determines the hertz of the ac output.

(3) Safety practices and procedures. The following special precautions should be observed when using an inverter:

- Turn the inverter before connecting or disconnecting a plug to or form the receptacle.
- Keep liquids, such as coffee or soda, away from the unit to avoid spilling them on or in the unit.
- Do not override or try to defeat built-in safety devices.

(4) Operating procedures. The following general procedures pertain to the operation of the inverter:

(a) Connect the plug to the receptacle.

(b) Turn the inverter power switch on.

(c) After use, turn the power switch off.

(d) Disconnect plug from receptacle.

(5) Inspection. General operator inspections for the inverter are contained in the following paragraphs. Detailed inspection requirements are found in the applicable maintenance manual.

(a) Input cord. Check for cuts or cracks in rubber covering.

(b) Case. Look for obvious damage, such as dents, which may indicate internal damage to components.

(6) Maintenance. Consult the applicable maintenance manual for scheduled and preventive maintenance requirements.

g. Oxygen Servicing Unit. The oxygen servicing unit, shown in figure 9-24, will provide oxygen at a maximum pressure of 3,000 psig. Each of the eight bottles will hold 224 cf of oxygen. The flow capacity of the regulator is 1,500 scfh at 2,300 psig delivered.

(1) Purpose. The oxygen servicing unit is designed to provide a means of carrying standard high pressure oxygen bottles and of interconnecting them to provide regulated single output which can be adjusted for pressure. It is used to service aircraft and other equipment which requires pressurized oxygen.

(2) Principles of operation. The oxygen servicing unit consists of eight cylindrical tubes, each of which can house a standard high-pressure oxygen bottle lying on its side. Pigtails and a manifold are used to interconnect the oxygen bottles to provide a single output. Each pigtail is connected to a check valve to prevent backflow. A manual control valve, connected to the manifold, is used to supply the oxygen directly from the oxygen bottles to the receiving equipment. An adjustable, dual indicator regulator controls the oxygen output at the desired pressure. The oxygen supply is transferred through a 25 foot flexible output service hose.

(3) Safety practices and procedures. The following special precautions should be observed when using the oxygen servicing unit:

- Personnel operating the unit must be familiar with the safety regulations regarding the handling of oxygen.
- Do not smoke within 50 feet of the oxygen servicing unit.
- All open connectors must be protected with plastic protectors (dust covers) to prevent contamination.

(4) Operating procedures. The following general procedures pertain to the operation of the oxygen servicing unit:

(a) Connect the filler line to the equipment being serviced.

(b) Open the bottle pressure outlet valve.

(c) Open the regulator pressure outlet valve to the desired amount of pressure.

(d) Open the receiving vessel input valve and transfer oxygen.

(e) When the desired amount of oxygen has been transferred, close the receiving vessel input valve.

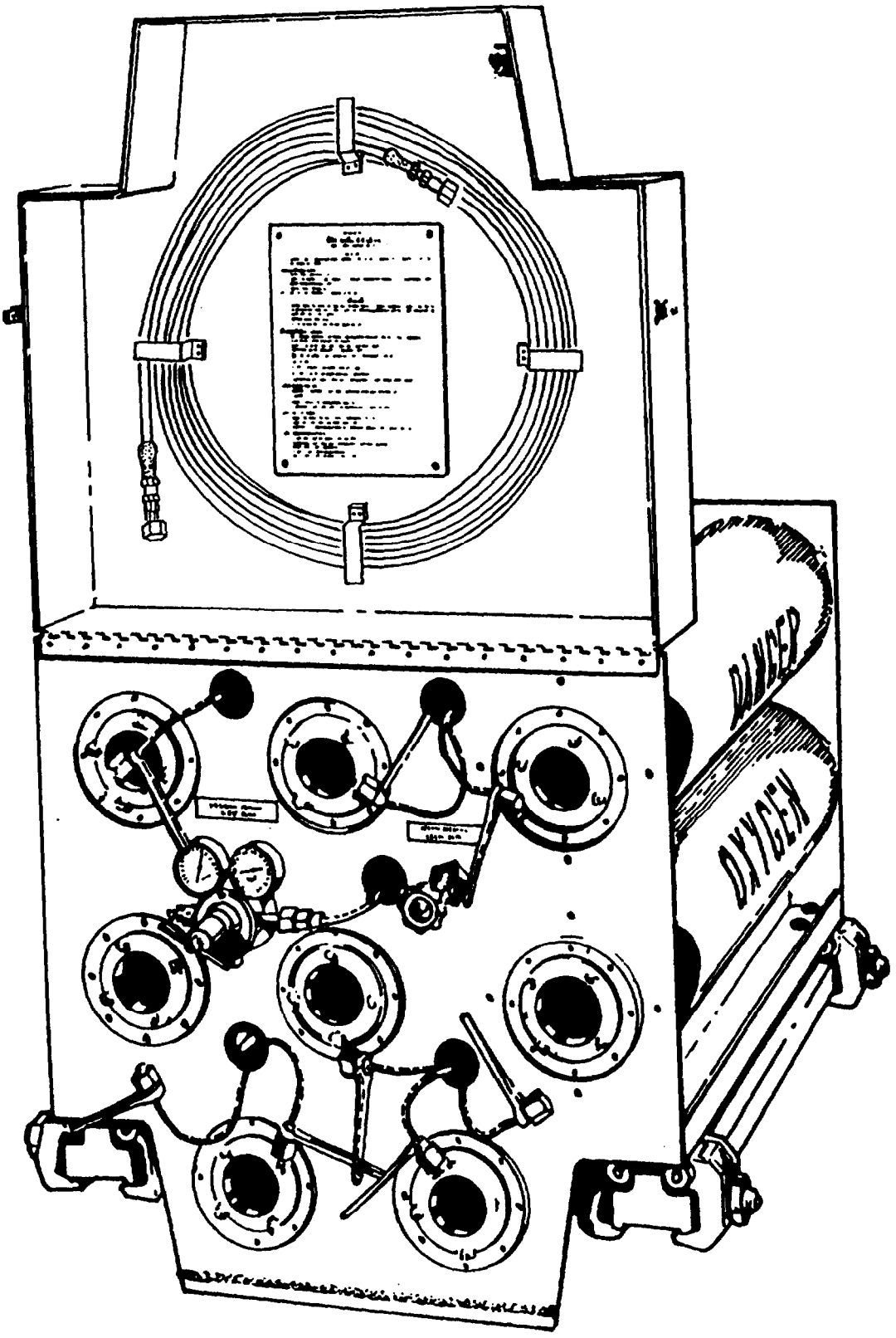

Figure 9-24. Oxygen Servicing Unit

(1) Close the bottle pressure outlet valve and the regulator pressure outlet valve.

(g) Disconnect the filler line from the equip ment being serviced.

(5) Inspection. The following general operator inspections apply to the oxygen servicing unit. Detailed inspection requirements are contained in the applicable maintenance manual.

(a) Regulator pressure outlet valve. Verify that the valve is fully closed.

(b) Bottle pressure outlet valve. Verify that the valve is fully closed.

(6) Maintenance. Consult the applicable maintenance manual for scheduled and preventive maintenance requirements.

h. Hydraulic Fluid Dispenser-Bleeder.

NOTE

NSN 4910-00-245-1832
(Formerly NSN 4920-00-245-1832)

WARNING

This machine must be used only by properly trained and qualified personnel.

WARNING

This type construction requires special procedures in filling the dispenser and charging it with compressed air. Read and understand all labels on the machine before operating. Never exceed 50 PSI when charging fluid dispenser bleeder.

WARNING

Check all controls before each use. If any alterations or substitutions have been made, DO NOT USE THE MACHINE.

(1) Purpose. The hydraulic fluid dispenser-bleeder (NSN 4910-00-245-1832) contains a Buna-N bladder in which air pressure is maintained in order to eject oil from the machine. This special bladder is approximately the same size as the tank and when filled with air approximately fills the tank' s volume. The purpose of the bladder is to separate the hydraulic fluid in the tank from the compressed air used to expel fluid into a hydraulic system thereby insuring that no air or condensation will contaminate the hydraulic fluid or brake system.

(2) Operating procedures. To fill the dispenser-bleeder proceed as follows:

(a) Depress bleeder valve located UNDER THE PRESSURE GAUGE. Do not tamper with the pressure relief valve. This bleeder valve drains the bladder air cavity of pressure.

(b) To deflate the bladder completely, while continuing to press bleeder valve, put no more than 10 PSI of air pressure into the fluid cavity of the tank through the air valve located in the filler cap. This will reduce the size of the bladder to allow maximum oil capacity in the tank and all air in the bladder will be ejected through the bleeder valve.

(c) When all air stops coming from the bladder bleeder valve, thus indicating that the bladder is flat, release the bleeder valve.

(d) Release the air pressure in the oil cavity of the tank by pressing TANK bleeder valve. Only if pressure gauge reads zero and no further air flows from TANK bleeder valve and bleeder valve located UNDER THE PRESSURE GAUGE, remove the filler cap.

WARNING

Never operate machine if filler cap (NSN 4910-01-127-7365) is not in place.

(e) Pour up to 5 gallons of hydraulic fluid into the tank. Replace filler cap and tighten with wrench.

(f) Inflate bladder through the AJE valve located UNDER THE PRESSURE GAUGE to 10 PSI.

WARNING

Protect eyes from oil spray.

(g) Bleed all trapped air from the fluidcavity by pressing the TANK bleeder valve and holding it until a clear stream of hydraulic oil ejects.

(h) Inflate bladder through AIR valve under pressure gauge. Do not exceed 50 PSI. Should PRESSURE RELIEF valve open, stop inflating immediately.

(i) Recharge the bladder as required. If 3 1/2 to 4 gallons of oil are used to charge the tank, a sufficient air cavity will be left to expel the liquid charge with a single air charge.

APPENDIX A

REFERENCES

A-1. ARMY REGULATIONS (AR):

AR 385-10	Army Safety Program

A-2. FIELD MANUALS (FM):

FM 1-563	Fundamentals of Airframe Maintenance

A-3. TECHNICAL BULLETINS (TB)

TB 750-111	Calibration Procedure for Tool Kit, Guided Missile; Torque Kit; Wrench (Spark-Proof); and Screwdriver Bit, Socket Set; Torque Handle

A-4. TECHNICAL MANUALS (TM):

TM 9-243	Use and Care of Hand Tools and Measuring Tools
TM 55-1730-201-12	Operator and Organizational Maintenance Manual including Illustrated
TM 55-1730-202-14	Parts Breakdown, Hydraulic Test Stand Operator's Organizational, DS and GS Maintenance Manual including Repair Parts and Special Tools List; Jack, Hydraulic; Tripod, Type B-5
TM 55-1730-215-13 & P	Operator's Aviation Unit, and Intermediate Maintenance Manual, Maintenance Platform Adjustable, Aircraft
TM 55-1730-218-12	Technical Manual, Overhaul with Parts Breakdown, Hydro-Mechanical Aviation Jack, Single Stage Type
TM 55-1730-219-12	Technical Manual, Operation, Service and Repair Instructions, 5 Ton Hydraulic Aircraft Hand Jack
TM 55-1730-221-12	Technical Manual, Operation, Service and Repair Instructions, 10 Ton Hydraulic Aircraft Hand Jack
TM 55-1730-225-23 P	Aviation Unit and Intermediate Maintenance Repair Parts and Special Tools List for Tow Bar Assembly, Aircraft
TM 55-1730-226-13	Operator's Aviation Unit and Intermediate Maintenance Manual for Oxygen Servicing Unit

APPENDIX A

REFERENCES-CONT

TM 55-1730-227-13 & P	Operator's Aviation Unit and Intermediate Maintenance Manual (including Repair Parts and Special Tools List) for Standard Aircraft Maintenance Trailer
TM 55-1730-229-12	Operator and Organizational Maintenance Manual, Power Unit, Aviation, Multi-Output GTED Electrical, Hydraulic, Pneumatic (AGPU)
TM 55-1730-229-24P	Organizational, Intermediate (Field) (Direct and General Support) and Depot Maintenance Repair Parts and Special Tools List - Power Unit, Aviation, Multi-Output GTED Electrical, Hydraulic, Pneumatic (AGPU)
TM 55-1730-229-34	Intermediate (Field) (Direct and General Support) Maintenance Manual-Power Unit, Aviation, Multi-Output GTED Electrical, Hydraulic, Pneumatic (AGPU)
TM 55-1740-200-14	Operator's, Organizational, DS and GS Maintenance Manual including Repair Parts and Special Tools List, Tractor, Wheeled, Aircraft Towing
TM 55-4920-335-14	Operator, Organizational, DS and GS Maintenance Manual including Illustrated Parts Breakdown, Hydraulic Test Stand

GLOSSARY

ACUTE-	Ending in a sharp point: as being or forming an angle less than 90 degrees.
AMBIENT -	An encompassing atmosphere.
ANNULAR-	Forming a ring.
AXIAL-	Situated around, in the direction of, on, or along an axis.
AXIS -	A straight line about which a body or a geometric figure rotates or may be supposed to rotate.
BABBITT -	A metal alloy used to line bearings.
BEVEL -	An instrument consisting of two rules or arms jointed together and opening to any angle for drawing angles or adjusting surfaces to be given a bevel.
CONICAL -	Resembling a cone in shape or fashion.
DETENT-	Device for positioning and holding one mechanical part in relation with another.
FERRULE-	Ring or cap put around the tool handle to prevent splitting.
FLUX -	A substance (as rosin) applied to surfaces to be joined by soldering, brazing, or welding to clean and free them from oxide and promote their union.
GALVANIC CORROSION -	Metal corrosion due to direct current of electricity.
INTERGRANULAR CORROSION -	Severe loss of ductility of a metal.
KERF-	The width of a cut or notch made by a saw or cutting torch.
KNURLED -	Series of beads or ridges on a metal surface to aid in gripping.
LAPPING -	To provide a gas-and-liquid-tight seal.
LONGITUDINAL -	Placed or running lengthwise.
NEUTRALIZATION -	To make chemically neutral.
OXYCHLORIDE -	A compound of oxygen with chlorine.

GLOSSARY-CONT

PEEN-	Hemispherical or wedge-shaped end of the head of a hammer.
PERPENDICULAR -	Being at right angles to a line or plane.
PNEUMATIC -	Moved or worked by air pressure.
PRUSSIAN BLUE -	A dark blue crystalline hydrated ferric ferrocyanide used as a test for ferric iron.
RADIAL -	Developing uniformly around a central axis.
RESINOID -	Thermosetting synthetic resin.
SILICATE -	Insoluble metal salt used in building materials.
SOLDER -	A metal or metallic alloy used when melted to join metallic surfaces.
STAKING -	To fasten up or support with stakes.
SWAGE-	Metal working tool for shaping.
TANGENT -	The trigonometric function that for an acute angle is the ratio between the leg opposite to the angle and the adjacent leg when it is considered part of a right triangle.
VERNIER-	Small auxiliary device used with a main device to obtain fine adjustments.
VITRIFY-	Convert into glass or glassy substance by heat and fusion.

INDEX

Subject	Paragraph Figure, Table Number
A	
Accuracy Limits, Torque Tool	T8-1
Action of Preload Indicating Washers	F8-30
Adjustable Hook Spanner Wrench	F4-39
Adjustable Reamer	F4-92
Adjustable Wrench	F4-25
Adjusting the Snap Gauge	F3-65
Adjustment of Spray Pattern	F5-4
Air Blow Cleaning Gun	F5-13
Air Compressors, Typical	F9-14
Aircraft Landing Gear Jack	F9-10
Aircraft Pre-Heater	F9-15
Alternate Method for Tightening to 15 Degree Wrench Arc	F8-25
Angle Extension Torque Wrench Attachment	F8-20
Angle, Checking	F3-19
Application of Blade Pitch for Certain Materials	F4-98
Application of Force, Improper	F8-19
Applying Paint at an Angle, Effect of	F5-6
Army Aviation, Types of Tools Used in	2-2
Attachment-Offset Reverse Extension, Torque Wrench	F8-17
Audible-Indicating Torque Wrench	F8-4
Automatic Center Punch	F4-60
Awl	4-6, F4-48
Awl, Scribing with an	F4-49
B	
Ball Peen Hammer	F4-1
Beading Large Tubing	F4-124
Bench Vise	F4-53
Bench Vise, Using a	4-54
Bender, Tube	F4-117
Bending Tube Tool	4-123
Bending Tube	F4-118
Bevel Protractor	F3-12
Bits, Drill	4-13
Blade Set, Hacksaw	F4-97
Bobs, Plumb	3-3, F3-6
Body Hammer	F4-2
Box-End Wrench Offset	F4-23
Box-End Wrenches	F4-22
Boxes, Tool	2-9
Boxes, Typical Tool	F2-1
Breast Drill	F4-80
Brown and Sharpe Tapered Reamer	F4-94

INDEX-CONT

Subject	Paragraph Figure, Table Number
C	
Cable Rigging Tension Chart, Typical	F7-7
Cable Tensionmeter	7-3
Calibration, Repair and	8-8
Calipers	3-8
Slide	F3-28
Vernier	F3-29
Calipers, Hermaphrodite	F3-27
Calipers, Simple	F3-24
Calipers, Spring-Joint	F3-25
Calipers, Transfer	F3-26
Care of Torque Tools	8-6
Carpenters Square	F3-10
Carriage Clamp	F4-55
Carriage Clamp, Using	F4-56
Center Head, Setting the	F3-14
Center Punch	F4-50
Center Punch for Drilling	F4-84
Check and Chuck Key, Three-Jaw	F6-3
Checkered Flags, Reflectorizing and	9-4
Checking Angle	F3-19
Checking Diameters, Snap Gauge for	F3-64
Checking Dimension Between Surfaces, Snap Gauge for	F3-62
Checking Flat or Cylindrical Work, Snap Gauge for	F3-63
Checking Propeller Shaft Run Out	F3-76
Chisels	F4-57
Chisels, Cold	4-9
Clamp, Carriage	F4-55
Clamping Devices	4-8
Bench Vise	F4-53
Cleaner, File	F4-79
Cleaning Gun, Air Blow	F5-13
Cleaning Guns	5-5
Cleaning Solvent Gun	F5-12
Cold Chisels	4-9
Combination Flaring Tools	F4-120
Combination Square	F3-11
Combination Wrench	F4-24
Common Screwdriver	F4-13
Concentric Torque Wrench Attachments	F8-15
Consumable Materials	1-3
Control Surface Angle, Measuring at Full Throw	F7-3
Conversion of Tensiometer Reading in Pounds	F7-6
Correct and Incorrect Stroke Technique	F5-5
Correct Drill Sizes for Tapping	F4-102
Correct GO Dimension for Cylindrical Part	F3-68
Correct NO-GO Dimension for Cylindrical Part	F3-69
Cotter Pin Extractor	7-7, F7-11

INDEX — CONT

Subject	Paragraph, Figure, Table, Number
C	
Cranes and Hoists, Typical	F9-18
Crossfiling	F4-76
Crowfoot Wrench	F7-20
Crowfoot Wrench, Using a	F7-21
Crowfoot Wrenches	7-15
Curved Tooth Foe	F4-74
Cutters, Pipe..	F4-114
CuttersTube	F4-115
Cutting Edge and Heel Angles, Usual	F4-86
Cutting Edge, Hand Grinding of	F4-87
Cutting Edge, Hand Grinding of Heel to	F4-88
Cutting, Flush	F4-113
Cutting Tube with Tube Cutter	4-23
Cutting Wire	F4-112
Cylinder, Locating Diameter of.	F3-15
Cylinder, Marking Diameter of	F3-16
Cylindrical Part, Correct GO Dimension for	F3-68
Cylindrical Part, Correct NO-GO Dimension for	F3-69
Cylindrical Part, Placing Snap Gauge on	F3-67
D	
Deflecting Beam Torque Wrench	F8-2
Deicer Boot Pliers	7-12
Deicer Boot Pliers, Using	F7-19
Deicer Boot Roller	7-14
Depth Gauge, Micromete	F3-48
Depth Gauge, Rule	F3-47
Depth Gauge, Vernier	F3-49
Depth Gauges	3-11
Depth Micrometer	F3-36
Description	
Leather Punch..	7-13
Determining Correct Torque Value	8-4
Determing Depth with the Square Head	F3-20

INDEX — CONT

Subject	Paragraph, Figure, Table, Number
D — Continued	
Diagonal Cutting Pliers	F4-42
Dial Indicator Installed on Propeller Shaft	F3-75
Dial Indicators	3-20
Dies	F4-104
Dies, Tapsand	4-18
Diestock	F4-105
Dispenser-Bleeder (Hydraulic Fluid)	9-9h
Divider, Spring	F3-21
Divider, Wing	F3-22
Dividers	3-7
Dividers, Scribing a Circle with	F3-23
Double Cutting Shears	4-21
Double-FlaringTool	F4-122
Drawfiling	F4-78
Dressing a Grinding Wheel	F6-6
Drill Bit, Machine Grinding a	F4-85
Drill Bit,Typical	F4-83
Drill Bits	4-13
Drill Grinding Gauge, Using	F4-89
Drill Jaws, V-Grooves in	F4-82
Drill Sizes	T4-2
Drill, Breast	F4-80
Drill, Hand	F4-81
Drill, Pneumatic	5-7
Drilling, Center Punch for	F4-84
Drills, Electric	6-3
Drills, Hand	4-12
Drills, Pneumatic	F5-15
Drive Punch	F4-61

INDEX -CONT

Subject	Paragraph Figure, Table Number
E	
Effect of Applying Paint at an Angle	F5-6
Electric Drills	6-3, F6-2
Electric Grinders	6-4
Engine Maintenance Stand	F9-3
Engine Trailer	F9-12
Equipment, Lubricating	F9-20
Extension Rods for Inside and Depth Micrometers	F3-37
Extension, Proper Application of Force When Using	F8-18
Extractor, Cotter Pin	7-7, F7-11
Extractor, Tap	F4-109
Extractors, Spiral Screw	F4-108
Extractors, Straight Screw	F4-107
F	
Face Pin Spanner Wrench	F4-38
Faulty Patterns and Suggested Corrections	F5-10
File Cleaner	F4-79
File Handle, Use of	F4-75
File Nomenclature	F4-65
File Teeth Spacing and Fineness	F4-67
File Teeth, Single- and Double-Cut	F4-66
File, Curved Tooth	F4-74
File, Flat	F4-70
File, Half-Round	F4-73
File, Mill	F4-69
File, Round	F4-72
File, Square	F4-71
File, Triangular	F4-68
Files	4-11
Filing for a Flat Surface	F4-77
Fillet and Radius Gauges	F3-73, 3-19
Fillet and Radius Gauges, Using	F3-74
Fingers, Mechanical	7-8, F7-12
Fishing Tool, Valve Stem	7-5, F7-9
Flanged Ring Gauge	F3-56
Flares, Single and Double	F4-119
Flaring Tools	4-25

INDEX -CONT

Subject	Paragraph Figure, Table Number
F-Continued	
Flat File	F4-70
Flat Parts, Gauging	F3-66
Flat Surface, Filing for a	F4-77
Flat-Nose Pliers	F4-44
Flush Cutting	F4-113
Flushing Paint Gun with Thinner or Solvent (Cup)	F5-7
Flushing Paint Gun with Thinner or Solvent (Pressure Tank or Gravity Bucket)	F5-8
G	
Gauge Tolerances, Ring	T3-1
Gauge Tolerances, Snap	T3-2
Gauge Types, Ring	F3-57
Gauge, Flanged Ring	F3-56
Gauge, Plug	3-14
Gauge, Surface	F3-45, 3-10
Gauge Thread	F3-52
Gauges, Ring	F3-55, 3-15
Gauges, Snap	F3-59, 3-16
Gauges, Snap	F3-59, 3-16
Gauges, Thread	3-13
Gauging Flat Parts	F3-66
General	
Electrical Power Tools	6-1
General Maintenance Tools	4-1
Ground Support Equipment	9-1
Measuring Tools	3-1
Special Aircraft Tools	7-1
Storage of Ground Support Equipment	9-6
Tool Procedures and Practices	2-1
Torque Tools and Torque Principles and Procedures	8-1
Use Torque Multiplier	F8-21
General, Ground Support Equipment	9-1
Grinder, Pneumatic	5-8
Grinders	F6-4
Grinding Wheel Installation	F6-5
Grinding Wheel, Dressing a	F6-6
Grinding, Screwdriver Tip	F4-19
GSE-Three Color Camouflage Pattern	T9-1
Guns, Paint	5-3

INDEX — CONT

Subject	Paragraph, Figure, Table, Number
H	
Hacksaw Blade Set	F4-97
Hacksaw Blade, Installing a	F4-99
Hacksaw, Proper Way to Hold a	F4-100
Hacksaws	4-17, F4-96
Half-PoundFile	F4-73
Hammer Face Substances, Soft-Faced	T4-1
Hammer, Ball Peen	F4-1
Hammer, Body	F4-2
Hammer, Lead or Copper	F4-5
Hammer, Riveting	F4-3
Hammer, Setting	F4-4
Hammer, Soft-Faced..	F4-6
Hammers and Mallets..	4-2
Hand Drill	F4-81
Hand Drills	4-12
Hand Grinding of Cutting Edge	F4-87
Hand Grinding of Heel to Cutting Edge	F4-88
Hand Seamer and Groover	4-27
Handle and Wedges, New	F4-11
Handle, Hinged	F4-29
Handle, Ratchet	F4-27
Handle, Removing Broken	F4-10
Handle, Sliding T-Bar	F4-28
Handle, Speed	F4-30
Heel Angle, Measuring	F4-90
Height Gauge, Typical	F3-51
Height Gauges	3-12
Typical	F3-51
Hermaphrodite Calipers	F3-27
Hexagonal Setscrew Wrench (Allen Wrench)	F4-31
Hinged Handle	F4-29
Hole Gauges, Small	3-22, F3-79
Hollow Punch	F4-64
Hook Spanner Wrench	F4-36
Hub Nut Torque Multiplier	F8-22
Hydraulic Fluid Dispenser-Bleeder.	9-9h

INDEX — CONT

Subject	Paragraph, Figure, Table, Number
I	
Identification of Parts of Reamers	F4-91
Improper Application of Force	F8-19
Individual Flaring Tool	F4-121
Inside Micrometer	F3-35
Installation of Preload Washer on a Bolt	F8-32
Installation of Preload Washers on a Stud	F8-31
Installing a Hacksaw Blade	F4-99
Installing Protractor Head on Rule	F3-17
Installing Wooden Wedge	F4-12
J	
Jack Hydraulic Schematic Diagram	F9-6
Jack, 3-TonTripod	F9-9
Jack, 5-Ton, Tripod -	F9-8
Jack, 10-Ton, Self-Contained	F9-11
Jack, 12-Ton, Tripod	F9-7
Jack, Aircraft Landing Gear	F9-10
Jobber' s (Machine) Reamer	F4-93
K	
Knife, Putty	F4-52
Knife, Utility	F4-50
Knives	4-7
Knives, Pocket	F4-51
L	
Laying Out Angle	F3-24
Lead or Copper Hammer	F4-5
Leather Punch	7-13
Level Condition	F3-5
Level	
Machinist' s Level	F3-2
Master Precision Level	F3-1
Mechanic' s Level	F3-4
Striding Level	F3-3
Levels	3-2
Locating Diameter of Cylinder	F3-15
Lockwire Pliers	7-11, F7-16
Long-NosePliers	F4-43
Loosening Protractor Adjustment Screws	F3-18
Lubricants for Tapping and Die-Cutting Threads	T4-3
Lubricating Equipment	F9-20

INDEX-CONT

Subject	Paragraph Figure, Table Number
M	
Machine Grinding a Drill Bit	F4-85
Magnet, Telescoping	7-9, F7-14
Maintenance Platform, Type B-1	F9-1
Maintenance Stand, Type B-4A	F9-2
Maintenance Stand, Engine	F9-3
Mallet, Rawhide	F4-7
Mallet, Rubber	F4-8
Mallet, Tinner's	F4-9
Mallets, Hammers and	4-2
Marking	9-5
Marking a Square Line	F3-13
Marking Diameter of Cylinder	F3-16
Master Precision Level	F3-1
Materials, Consumable	1-3
Measuring Control Surface Angle at Full Throw	F7-3
Measuring Heel Angle	F4-90
Measuring Hole with a Small Hole Gauge	F3-80
Measuring Hole with Telescoping Gauge	F3-78
Measuring Sheet Metal and Wire	F3-72
Mechanic's Level	F3-4
Mechanical Fingers	7-8, F7-12
Mechanist's Scribers	F3-7
Micrometer Depth Gauge	F3-48
Micrometer with Extension Rod, Using Inside	F3-40
Micrometer, Reading a Vernier	F3-43
Micrometers	3-9
Depth	F3-36
Extension Rods for Inside and Depth	F3-37
Inside	F3-35
Outside	F3-34
Parts of a Micrometer	F3-41
Reading a Measurement on a Micrometer	F3-42
Reading a Metric Micrometer	F3-44
Using Inside	F3-38
Using Outside	F3-39
Mill File	F4-69
Mixing, Painting Requirements	9-3
Multipliers, Torque	8-9

INDEX- CONT

Subject	Paragraph Figure, Table Number
N	
New Handle and Wedges	F4-11
Nippers and Pincers	F4-111, 4-22
Nitrogen Servicing Unit	F9-17
Nomenclature, File	F4-65
Nonconcentric Attachments to Torque Wrench	F8-16
Nozzle Position to Produce Vertical Fan	F5-3
O	
Offset Screwdriver	F4-15
Oil Spray Gun	F5-11
Oil Spray Guns	5-4
Open-End Wrench	F4-20
Open-End Wrench Jaw Offset	F4-21
Operation and Use, Torque Wrench	8-5
Operation of Vernier Calipers	F3-31
Outside Micrometer	F3-34
Oxygen Servicing Unit	F9-24
P	
Paint Gun with Thinner or Solvent (Cup), Flushing	F5-7
Paint Gun with Thinner or Solvent (Pressure Tank or Gravity Bucket), Flushing	F5-8
Paint Gun, Soaking	F5-9
Paint Gun, Typical	F5-1
Paint Guns	5-3
Painting Requirements	9-3
Parts of a Micrometer	F3-41
Pattern, Spray	F5-2
Phillips Screwdriver	F4-14
Pickler, Pre-Oiler and	F9-19
Pin Punch	
Pin Punch	F4-62
Pin Spanner Wrench	F4-37
Pinchers, Nippers and	4-22, F4-111
Pipe and Tube Cutters	4-23
Pipe Cutters	F4-114
Placing Snap Gauge on Cylindrical Part	F3-67

INDEX - CONT

Subject	Paragraph Figure, Table Number

P - Continued

Pliers	4-5
Deicer Boot	7-12
Lockwire	7-11, F7-16
Pliers, Diagonal Cutting	F4-42
Pliers, Flat Nose	F4-44
Pliers, Long-Nose	F4-43
Pliers, Retaining Ring	F4-40
Pliers, Round-Nose	F4-45
Pliers, Slip-Joint	F4-41
Pliers, Vise-Grip	F4-47
Pliers, Water Pump	F4-46
Plug Gauges	F3-54, 3-14
Plug, Three-Prong Grounded	F6-1
Plumb Bobs	3-3, F3-6
Plumb Bobs, Polished Brass	F3-6
Plumb Bobs, Solid Steel	F3-6
Pneumatic Drill	5-7
Pneumatic Drills	F5-15
Pneumatic Grinder	5-8, F516
Pneumatic Hammer	5-9, F5-17
Pneumatic Tools	5-1
Pneumatic Vacuum Cleaner	5-6, F5-14
Pocket Knives	F4-51
Polished Brass Plumb Bobs	F3-6
Portable Power Supply	F9-23
Power Application of Force When Using Extension	F8-18
Power Supply, Portable	F9-23
Power Wrench Torque Multiplier	F8-23
Practices and Procedures, Safety	9-2
Practices, Shop	2-8
Pre-Oiler and Pickler	F9-19
Precautions, Safety	5-2
Preload Indicating Washers	F8-29
Preload Indicating Washers, Torque Procedures Without a Torque Wrench	8-11
Preset Torque Screwdriver	F8-1
Prick Punch	F4-58
Progressive Snap Gauge	F3-61
Propeller Shaft Runout, Checking	F3-76
Propeller Shaft, Dial Indicator Installed on	F3-75
Proper Fit of Screwdrivers	F4-17

INDEX - CONT

Subject	Paragraph Figure, Table Number

P - Continued

Proper Procedure for Pulling Adjustable Wrenches	F4-35
Proper Way to Hold a Hacksaw	F4-100
Protractor	7-2, F7-1
Protractor Adjustment Screws, Loosening	F3-18
Protractor Head on Rule, Installing	F3-17
Protractor, Bevel	F3-12
Protractor, Setting, with Flight Control Surface in Neutral Position	F7-2
Punch, Automatic Center	F4-60
Punch, Center	F4-59
Punch, Drive	F4-61
Punch, Hollow ::::	F4-64
Punch, Leather	7-13
Punch, Pin	F4-62
Punch, Prick	F4-58
Punch, Transfer	F4-63
Punches	4-10
Purpose	
of Manual	1-1
Putty Knife	F4-52
Tools on Army Aircraft	2-5

R

Radius Gauges, Fillet and	3-19
Ratchet Handle	F4-27
Ratchet Screwdrivers	F4-16
Rawhide Mallet	F4-7
Reading a Measurement on a Micrometer	F3-42
Reading a Measurement on a Vernier Caliper	F3-32
Reading a Metric Caliper	F3-33
Reading a Metric Micrometer	F3-44
Reading a Vernier Micrometer	F3-43
Reamer, Adjustable	F4-92
Reamer, Brown and Sharpe Tapered	F4-94
Reamer, Jobber's (Machine)	F4-93
Reamer, Repairman's Hand	F4-95
Reamers	4-14
Reamers, Identification of Parts of	F4-91
Recommended Torque Values	T8-2
Reflectorizing and Checkered Flags	9-4
Removing Broken Handle	F4-10

INDEX - CONT

Subject	Paragraph Figure, Table Number
R - Continued	
Repair	
and Calibration	8-8
Tool, Valve	7-6, F7-10
Tool, Valve	7-6, F7-1 0
Rigid Frame Torque Wrench	F8-3
Ring Gauge Types	F3-57
Ring Gauges	3-15
Tolerances	T3-1
Ring Gauges, Using	F3-58
Riveting Hammer	F4-3
Roller, Deicer Boot	7-14
Round File	F4-72
Round-Nose Pliers	F4-45
Rubber Mallet	F4-8
Rule Depth Gauge	F3-47
Rule, Typical	F3-9
Rules, Tapes and	3-5
S	
Safety	
Electrical Power Tools	6-2
Precautions	5-2
Tool	2-7
Safety Practices and Procedures	9-2
Schematic Diagram, Jack Hydraulic	F9-6
Scope of Manual	1-2
Screwdriver Tip Grinding	F4-19
Screwdriver, Offset	F4-15
Screwdriver, Phillips	F4-14
Screwdriver, Preset Torque	F8-1
Screwdrivers	4-3
Screwdrivers, Common	F4-13
Screwdrivers, Proper Fit of	F4-17
Screwdrivers, Ratchet	F4-16
Scribers	3-4
Scribers	3-4
Scribers, Mechanist's	F3-7
Scribing a Circle with Dividers	F3-23
Scribing with an Awl	F4-49
Selection, Torque Wrench	8-3
Self-Contained Jack, 10-Ton	F9-11
Servicing Unit, Nitrogen	F9-17
Servicing Unit, Oxygen f	F9-24

INDEX - CONT

Subject | **Paragraph Figure, Table Number**

S - Continued

Setscrew Wrench (Allen Wrench) Hexagonal F4-31
Setting Hammer F4-4
Setting Height on a Surface Gauge 3-10c, F3-46
Setting Protractor with Flight Control Surface in Neutral Position F7-2
Setting the Center Head F3-14
Shears and Double Flares F4-119
Shears, Double Cutting 4-21
Sheet Metal and Wire Gauge F3-72, 3-18
Sheet Metal and Wire, Measuring F3-72
Shop Practices 2-8
Simple Calipers F3-24
Single- and Double-Cut File Teeth F4-66
Sizes, Drill T4-2
Slide Caliper F3-28
Sliding T-Bar Handle F4-28
Slip-Joint Pliers F4-41
Small Hole Gauge, Measuring Hole with a F3-80
Small Hole Gauges F3-79, 3-22
Snap Gauge for Checking Diameters F3-64
Snap Gauge for Checking Dimension Between Surfaces F3-62
Snap Gauge for Checking Flat or Cylindrical Work F3-63
Snap Gauge, Adjusting the F3-65
Snap Gauge, Progressive F3-61
Snap Gauge, Solid Nonadjustable F3-60
Snap Gauges F3-59, 3-16
  Tolerances T3-2
Soaking a Paint Gun F5-9
Sockets F4-26
Soft-Faced Hammer F4-6
Soft-Faced Hammer Face Substances T4-1
Soldering Tools F7-22, 7-16
Solid Nonadjustable Snap Gauge F3-60
Solid Steel Plumb Bobs F3-6
Solvent, Cleaning Gun F5-12
Spacing and Fineness, File Teeth F4-67
Special Aircraft Tools, General 7-1
Speed Handle F4-30
SPEM Stand F9-4
Spiral Screw Extractors F4-108
Spray Gun, Oil F5-11
Spray Guns, Oil 5-4
Spray Pattern F5-2
Spray Pattern, Adjustment of F5-4

INDEX - CONT

Subject	Paragraph Figure, Table Number

S - Continued

Spring Divider F3-21
Spring-Joint Calipers F3-25
Square
  Carpenter's F3-10
  Combination F3-11
Square File F4-71
Square Head, Determining Depth with the F3-20
Square Line, Marking a F3-13
Squares 3-6
Stand, SPEM F9-4
Stand, Type D5B Hydraulic Test F9-5
Storage of Ground Support Equipment 9-6
Straight Screw Extractor F4-107
Striding Level F3-3
Stroke Technique, Correct and Incorrect F5-5
Suggested Corrections, Faulty Pattern and F5-10
Surface Gauge 3-10
  Setting Height on a F3-46

T

Tap Extractor F4-109
Tap Extractor, Use of F4-110
Tap Wrenches F4-103
Tapes and Rules 3-5
Tapes Typical F3-8
Tapping and Die-Cutting Threads, Lubricants for T4-3
Tapping, Correct Drill Sizes for F4-102
Taps and Dies 4-18
Taps F4-101
Telescoping Gauge, Measuring Hole with F3-78
Telescoping Gauges 3-21, F3-77

INDEX - CONT

Subject | **Paragraph Figure, Table Number**

T- Continued

Telescoping Magnet 7-9, F7-14
Tensiometer F7-4
Tensiometer Reading in Pounds, Conversion of F7-6
Tensiometer, Cable 7-3
Tensiometer, Using a F7-5
Testing of Torque Tools 8-7
Thickness Gauge 3-17, F3-70
Thread Chasers 4-19, F4-106
Thread Gauge F3-52
Thread Gauges 3-13
Three-Jaw Chuck and Chuck Key F6-3
Three-Prong Grounded Plug F6-1
Tightening Preload Washers F8-33
Tightening to 15-Degree Wrench Arc F8-24
Tightening to 30-Degree Wrench Arc F8-27
Tightening to 60- or 120-Degree Wrench Arc F8-26
Tightening to 90- or 180-Degree Wrench Arc F8-28
Tinner's Mallet F4-9
Tolerances
  Ring Gauges 3-15, T3-1
  Snap Gauges T3-2
Tool Boxes 2-9
Tool Care 2-3
Tool Safety 2-7
Tool Selection 2-4
Tool Selection 10-2f
Tool Use 2-6
Tool, Double Flaring F4-122
Tool, Individual Flaring Tool F4-121
Tool, Tube Bending 4-26
Tools, Combination Flaring F4-120
Tools, Flaring 4-25
Tools, Pneumatic 5-1
Tools, Soldering F7-22, 7-16
Torque Multiplier Power Wrench 8-10, F8-23
Torque Multiplier, General Use F8-21
Torque Multiplier, Hub Nut F8-22
Torque Multipliers 8-9
Torque Procedures Without a Torque Wrench 8-11
Torque Tool Accuracy Limits T8-1
Torque Tools, Care of 8-6

INDEX - CONT

Subject	Paragraph Figure, Table Number
T - Continued	
Torque Tools, Testing of	8-7
Torque Tools, Types of	8-2
Torque Value, Determining Correct	8-4
Torque Values, Recommended	T8-2
Torque Wrench Attachment - Offset Reverse Extension	F8-17
Torque Wrench Attachment, Angle Extension	F8-20
Torque Wrench Attachments, Concentric	F8-15
Torque Wrench Operation and Use	8-5
Torque Wrench Selection	8-3
Torque Wrench - Deflecting Beam with Indicating Dial (Direct Reading with Audible Signal), Type I, Class 2, Style B	F8-8
Torque Wrench - Deflecting Beam with Indicator Plate (Direct Reading with Feel Impulse and Audible Signal), Type I, Class 1, Style B	F8-6
Torque Wrench - Deflecting Beam with Indicator Plate (Direct Reading), Type I, Class 1, Style A	F8-5
Torque Wrench - Rigid Case with Indicator Dial (Direct Reading) Type II, Style A	F8-9
Torque Wrench - Rigid Case with Indicator Dial, Presetting Torque Dial (Direct Reading with Audible Signal),Type II, Style B	F8-10
Torque Wrench - Rigid Case with Presetting Dial (Direct Reading with Flashlight Signal), Type II, Style C	F8-11
Torque Wrench - Rigid Case, Micrometer-Style Torque Presetting, Audible Signal, Plain Head Type Ill, Class 1	F8-12
Torque Wrench - Rigid Case, Micrometer-Style Torque Presetting, Audible Signal, Ratchet Reversible Head, Type III, Class 2	F8-13
Torque Wrench - Rigid Case, Preset Torque, Audible Signal, Type V	F8-14
Torque Wrench, Audible-Indicating	F8-4
Torque Wrench, Deflecting Beam	F8-2
Torque Wrench, Nonconcentric Attachments to	F8-16
Torque Wrench, Rigid Frame	F8-3
Torque Wrenches - Deflecting Beam with Indicating Dial (Direct Reading), Type I, Class 2, Style A	F8-7

INDEX - CONT

Subject | **Paragraph Figure, Table Number**

T - Continued

Tow Vehicle, Type MB-4 ..... F9-21
Towbar F9-16
Trailer, Engine F9-12
Trammel F3-30
Transfer Calipers F3-26
Transfer Punch F4-63
Triangular File F4-68
Tripod Jack, 3-Ton F9-9
Tripod Jack, 5-Ton F9-8
Tripod Jack, 12-Ton F9-7
Tube Beading Tool 4-26, F4-123
Tube Bender F4-117
Tube Cutters F4-115
Tube Cutters, Pipe and 4-23
Tube, Bending F4-118
Tubing, Beading Large F4-124
Turnbuckle Wrench 7-4, F7-8
Type I, Class 1, Style A Torque Wrench - Deflecting Beam with Indicator Plate (Direct Reading) F8-5
Type I, Class 1, Style B Torque Wrench - Deflecting Beam with Indicator Plate (Direct Reading and Feel Impulse and Audible Signal) F8-6
Type I, Class 2, Style A Torque Wrenches -Deflecting Beam with Indicating Dial (Direct Reading) F8-7
Type I, Class 2, Style B Torque Wrench - Deflecting Beam with Indicating Dial (Direct Reading with Audible Signal) F8-8
Type II Style A Torque Wrench -Rigid Case with Indicator Dial (Direct Reading) F8-9
Type II, Style B Torque Wrench -Rigid Case with Indicator Dial, Presetting Torque Dial (Direct Reading with Audible Signal) F8-10
Type II, Style C Torque Wrench - Rigid Case with Presetting Dial (Direct Reading with Flashlight Signal) F8-11

INDEX - CONT

Subject	Paragraph Figure, Table Number

T - Continued

Type III, Class 1 Torque Wrench Rigid Case, Micrometer-Style Torque Presetting, Audible Signal, Plain Head F8-12
Type III, Class 2 Torque Wrench - Rigid Case, Micrometer-Style Torque Presetting, Audible Signal, Ratchet Reversible Head F8-13
Type B-1 Maintenance Platform F9-1
Type B-4A, Maintenance Stand F9-2
Type D5B Hydraulic Test Stand F9-5
Type MB-4 Tow Vehicle F9-21
Type V Torque Wrench - Rigid Case, Preset Torque, Audible Signal F8-1 4
Types of Ground Support Equipment 9-9
Types of Tools Used in Army Aviation 2-2
Types of Torque Tools 8-2
Typical Air Compressors F9-14
Typical Aircraft Pre-Heater F9-15
Typical Cable Rigging Tension Chart F7-7
Typical Cranes and Hoists F9-18
Typical Drill Bit F4-83
Typical Height Gauge F3-51
Typical Paint Gun F5-1
Typical Rule F3-9
Typical Tapes F3-8
Typical Tool Boxes F2-1

U

Use of Tap Extractor F4-110
Using a Bench Vise F4-54
Using a Crowfoot Wrench F7-21
Using a File Handle F4-75
Using a Tensiometer F7-5
Using a Thickness Gauge F3-71
Using a Vernier Depth Gauge F3-50
Using Carriage Clamp F4-56
Using Deicer Boot Pliers F7-17
Using Deicer Boot Roller F7-19
Using Drill Grinding Gauge F4-89
Using Fillet and Radius Gauges F3-74
Using Inside Micrometer F3-38
Using Inside Micrometer with Extension Rod F3-40
Using Leather Punch F7-18
Using Offset Screwdriver F4-18
Using Outside Micrometer F3-39
Using Ring Gauges F3-58
Using Thread Gauges F3-53
Usual Cutting Edge and Heel Angles F4-86

INDEX - CONT

Subject	Paragraph Figure, Table Number
V	
V-Grooves in Drill Jaws	F4-82
Vacuum Cleaner, Pneumatic	5-6
Valve Repair Tool	7-6, F7-10
Valve Stem Fishing Tool	7-5, F7-9
Vernier Caliper	F3-29
Vernier Caliper, Operation of	F3-31
Vernier Caliper, Reading a Measurement on a	F3-32
Vernier Depth Gauge	F3-49
Vernier Depth Gauge, Using a	F3-50
Vertical Fan, Nozzle Position to Produce	F5-3
Vise, Bench	F4-53
Vise-Grip Pliers	F4-47
W	
Washer on a Bolt, Installation of Preload	F8-32
Washers on a Stud, Installation of Preload	F8-31
Washers, Action of Preload Indicating	F8-30
Washers, Preload Indicating	F8-29
Washers, Tightening Preload	F8-33
Water Pump Pliers	F4-46
Wedge, Installing Wooden	F4-12
Wing Divider	F3-22
Wire Gauge, Sheet Metal and	3-18, F3-72
Wire, Cutting	F4-112
Wrench Arc, Alternate Method for Tightening to 15 Degree	F8-25
Wrench Arc, Tightening to 15-Degree	F8-24
Wrench Arc, Tightening to 30-Degree	F8-27
Wrench Arc, Tightening to 60- or 120-Degree	F8-26
Wrench Arc, Tightening to 90- or 180-Degree	F8-28
Wrench Jaw Offset, Open-End	F4-21
Wrench, Adjustable	F4-25

INDEX - CONT

Subject	Paragraph Figure, Table Number
W - Continued	
Wrench, Adjustable Hook Spanner	F4-39
Wrench, Combination	F4-24
Wrench, Crowfoot	F7-20
Wrench, Face Pin Spanner	F4-38
Wrench, Hook Spanner	F4-36
Wrench, Open-End	F4-20
Wrench, Pin Spanner	F4-37
Wrench, Torque Multiplier Power	8-10
Wrench, Turnbuckle	7-4, F7-8
Wrench, Use of Box-End	F4-33
Wrench, Use of Open-End	F4-32
Wrench, Use of Socket	F4-34
Wrenches	4-4
Wrenches, Box-End	F4-22
Wrenches, Crowfoot	7-20
Wrenches, Proper Procedure for Pulling Adjustable	F4-35
Wrenches, Tap	F4-103

By Order of the Secretary of the Army:

GORDON R. SULLIVAN
General, United States Army
Chief of Staff

Official:

MILTON H. HAMILTON
Administrative Assistant to the
Secretary of the Army
02546

DISTRIBUTION:
To be distributed in accordance with DA Form 12-31-E, block no. 3226, requirements for TM 1-1500-204-23-9.

These are the instructions for sending an electronic 2028

The following format must be used if submitting an electronic 2028. The subject line must be exactly the same and all fields must be included; however only the following fields are mandatory: 1, 3, 4, 5, 6, 7, 8, 9, 10, 13, 15, 16, 17, and 27.

From: " Whomever" <whomever@avma27.army.mil>
To: Is-Lp@redstone.armyl

Subject: DA Form 2028

1. ***From:*** Joe Smith
2. ***Unit:*** home
3. ***Address:*** 4300 Park
4. ***City:*** Hometown
5. ***St:*** MO
6. ***Zip:*** 77777
7. ***Date Sent:*** 19-OCT-93
8. ***Pub no:*** 55-2840-229-23
9. ***Pub Title:*** TM
10. ***Pub/ication Date:*** 04-JUL-85
11. *Change Number:* 7
12. *Submitter Rank:* MSG
13. ***Submitter FName:*** Joe
14. Submitter MName: T
15. ***Submitter LName:*** Smith
16. ***Submitter Phone:*** 123-123-1234
17. ***Problem:*** **1**
18. *Page:* 2
19. *Paragraph:* 3
20. *Line:* 4
21. *NSN:* 5
22. *Reference:* 6
23. *Figure:* 7
24. *Table:* 8
25. *Item:* 9
26. *Total:* 123
27. ***Text:***

This is the text for the problem below line 27.

THEN . .JOT DOWN THE DOPE ABOUT IT ON THIS FORM, CAREFULLY TEAR IT OUT, FOLD IT AND DROP IT IN THE MAIL!

SOMETHING WRONG WITH THIS PUBLICATION?

FROM: (PRINT YOUR UNIT'S COMPLETE ADDRESS)
PFC John DOE
CO A 3rd Engineer Bn
Ft. Leonardwood, MO 63108

DATE SENT 22 August 1992

PUBLICATION NUMBER	PUBLICATION DATE	PUBLICATION TITLE
TM 1-1520-250-10	15 June 1992	Operator's manual MH60K Helicopter

BE EXACT PIN-POINT WHERE IT IS

PAGE NO	PARA-GRAPH	FIGURE NO	TABLE NO
6	2-1 a		
B1		4-3	

IN THIS SPACE, TELL WHAT IS WRONG AND WHAT SHOULD BE DONE ABOUT IT:

In line 6 of paragraph 2-1a the manual states the engine has 6 cylinders. The engine on my set only has 4 cylinders. Change the manual to show 4 cylinders.

Callout 16 on figure 4-3 is pointed at a bolt. In key to figure 4-3, item 16 is calle a shim. Please correct one or the other

EXAMPLE

PRINTED NAME, GRADE OR TITLE, AND TELEPHONE NUMBER

JOHN DOE, PFC (268) 317-7111

SIGN HERE

JOHN DOE John Doe

DA FORM 1 JUL 79 2028-2

PREVIOUS EDITIONS ARE OBSOLETE.

DRSTS-M verprint2, 1 Nov 80

P.S.- - IF YOUR OUTFIT WANTS TO KNOW ABOUT YOUR RECOMMENDATION, MAKE A CARBON COPY OF THIS AND GIVE TO YOUR HEADQUARTERS.

TEAR ALONG PERFORATED LINE

FILL IN YOUR UNIT'S ADDRESS

FOLD BACK

DEPARTMENT OF THE ARMY

OFFICIAL BUSINESS

Commander
U.S. Army Aviation and Missile Command
ATTN: AMSAM-MMC-LS-LP
Redstone Arsenal, Al 35898-5230

RECOMMENDED CHANGES TO EQUIPMENT TECHNICAL PUBLICATIONS

THEN . .JOT DOWN THE DOPE ABOUT IT ON THIS FORM, CAREFULLY TEAR IT OUT, FOLD IT AND DROP IT IN THE MAIL!

SOMETHING WRONG WITH THIS PUBLICATION?

FROM: (PRINT YOUR UNIT'S COMPLETE ADDRESS)

DATE SENT

PUBLICATION NUMBER	PUBLICATION DATE	PUBLICATION TITLE
TM 1-1500-204-23-9	31 July 1992	General Aircraft Maintenance-Tools and Ground Support

BE EXACT PIN-POINT WHERE IT IS

PAGE NO	PARA-GRAPH	FIGURE NO	TABLE NO

IN THIS SPACE, TELL WHAT IS WRONG AND WHAT SHOULD BE DONE ABOUT IT:

PRINTED NAME, GRADE OR TITLE, AND TELEPHONE NUMBER

SIGN HERE

DA FORM 1 JUL 79 2028-2

PREVIOUS EDITIONS ARE OBSOLETE.

DRSTS-M verprint2, 1 Nov 80

P.S.- - IF YOUR OUTFIT WANTS TO KNOW ABOUT YOUR RECOMMENDATION, MAKE A CARBON COPY OF THIS AND GIVE TO YOUR HEADQUARTERS.

FILL IN YOUR UNIT'S ADDRESS

FOLD BACK

DEPARTMENT OF THE ARMY

OFFICIAL BUSINESS

Commander
U.S. Army Aviation and Missile Command
ATTN: AMSAM-MMC-LS-LP
Redstone Arsenal, Al 35898-5230

TEAR ALONG PERFORATED LINE

RECOMMENDED CHANGES TO EQUIPMENT TECHNICAL PUBLICATIONS

THEN . .JOT DOWN THE DOPE ABOUT IT ON THIS FORM, CAREFULLY TEAR IT OUT, FOLD IT AND DROP IT IN THE MAIL!

SOMETHING WRONG WITH THIS PUBLICATION?

FROM: (PRINT YOUR UNIT'S COMPLETE ADDRESS)

DATE SENT

PUBLICATION NUMBER	PUBLICATION DATE	PUBLICATION TITLE
TM 1-1500-204-23-9	31 July 1992	General Aircraft Maintenance-Tools and Ground Support

BE EXACT PIN-POINT WHERE IT IS

PAGE NO	PARA-GRAPH	FIGURE NO	TABLE NO

IN THIS SPACE, TELL WHAT IS WRONG AND WHAT SHOULD BE DONE ABOUT IT:

PRINTED NAME, GRADE OR TITLE, AND TELEPHONE NUMBER

SIGN HERE

DA FORM 1 JUL 79 2028-2

PREVIOUS EDITIONS ARE OBSOLETE.

DRSTS-M verprint2, 1 Nov 80

P.S.- - IF YOUR OUTFIT WANTS TO KNOW ABOUT YOUR RECOMMENDATION. MAKE A CARBON COPY OF THIS AND GIVE TO YOUR HEADQUARTERS.

FILL IN YOUR UNIT'S ADDRESS

FOLD BACK

DEPARTMENT OF THE ARMY

OFFICIAL BUSINESS

Commander
U.S. Army Aviation and Missile Command
ATTN: AMSAM-MMC-LS-LP
Redstone Arsenal, Al 35898-5230

TEAR ALONG PERFORATED LINE

RECOMMENDED CHANGES TO EQUIPMENT TECHNICAL PUBLICATIONS

THEN . .JOT DOWN THE DOPE ABOUT IT ON THIS FORM, CAREFULLY TEAR IT OUT, FOLD IT AND DROP IT IN THE MAIL!

SOMETHING WRONG WITH THIS PUBLICATION?

FROM: (PRINT YOUR UNIT'S COMPLETE ADDRESS)

DATE SENT

PUBLICATION NUMBER	PUBLICATION DATE	PUBLICATION TITLE
TM 1-1500-204-23-9	31 July 1992	General Aircraft Maintenance-Tools and Ground Support

BE EXACT PIN-POINT WHERE IT IS

PAGE NO	PARA-GRAPH	FIGURE NO	TABLE NO

IN THIS SPACE, TELL WHAT IS WRONG AND WHAT SHOULD BE DONE ABOUT IT:

PRINTED NAME, GRADE OR TITLE, AND TELEPHONE NUMBER

SIGN HERE

DA FORM 1 JUL 79 2028-2

PREVIOUS EDITIONS ARE OBSOLETE.

DRSTS-M verprint2. 1 Nov 80

P.S.- - IF YOUR OUTFIT WANTS TO KNOW ABOUT YOUR RECOMMENDATION, MAKE A CARBON COPY OF THIS AND GIVE TO YOUR HEADQUARTERS.

FILL IN YOUR UNIT'S ADDRESS

FOLD BACK

DEPARTMENT OF THE ARMY

OFFICIAL BUSINESS

Commander
U.S. Army Aviation and Missile Command
ATTN: AMSAM-MMC-LS-LP
Redstone Arsenal, Al 35898-5230

TEAR ALONG PERFORATED LINE

THE METRIC SYSTEM AND EQUIVALENTS

Linear Measure

1 centimeter = 10 millimeters = .39 inch
1 decimeter = 10 centimeters = 3.94 inches
1 meter = 10 decimeters = 39.37 inches
1 dekameter = 10 meters = 32.8 feet
1 hectometer = 10 dekameters = 328.08 feet
1 kilometer = 10 hectometers = 3.2808.8 feet

Weights

1 centigram = 10 milligrams = .15 grain
1 decigram = 10 centigrams = 1.54 grains
1 gram = 10 decigram = .035 ounce
1 dekagram = 10 grams = .35 ounce
1 hectogram = 10 dekagrams = 3.52 ounces
1 kilogram = 10 hectograms = 2.2 pounds
1 quintal = 100 kilograms = 220.46 pounds
1 metric ton = 10 quintals = 1.1 short tons

Cubic Measure

1 cu. centimeter = 1000 cu. millimeters = .06 cu. inch
1 cu. decimeter = 1000 cu. centimeters = 61.02 cu in.
1 cu. meter = 1000 cu. decimeters = 35.31 cu. feet

Square measure

1 sq. centimeter = 100 sq. millimeters =.155 sq. in.
1 sq. decimeter = 100 sq. centimeters = 15.5 inches
1 sq. meter (centare) = 100 sq. decimeters = 10.76 feet
1 sq. dekameter (are) = 100 sq. meters = 1.076.4 sq. ft.
1 sq. hectometer (hectare) = 100 sq. dekameters = 2.47 acres
1 sq. kilometer = 100 hectometers = .386 sq. miles

Liquid Measure

1 dekaliter = 10 liters = 2.64 gallons
1 hectoliter = 10 dekaliters = 26.42 gallons
1 kiloliter = 10 hectoliters = 264.18 gallons
1 liter = 10 deciliters = 33.81 fl. ounces
1 centiliter = 10 milliliters = .34 fl. ounce
1 deciliter = 10 centiliters = 3 38 fl. ounces
1 metric ton = 10 quintals = 1.1 short tons

Approximate Conversion Factors

To change	To	Multiply by
inches	centimeters	2.540
feet	meters	.305
yards	meters	.914
miles	kilometers	1.609
sq. inches	sq. centimeters	6.451
sq. feet	sq. meters	.093
sq. yards	sq. meters	.836
sq. miles	sq. kilometers	2.590
acres	sq. hectometers	.405
cubic feet	cubic meters	.028
cubic yards	cubic meters	.765
fluid ounces	milliliters	29.573
pints	liters	.472
quarts	liters	.946
gallons	liters	3.785
ounces	grams	28.349
pounds	kilograms	.454
short tons	metric tons	.907
pound inches	newton-meters	.11296

To change	To	Multiply by
ounce inches	newton-meters	.0070062
centimeters	inches	.394
meters	feet	3.280
meters	yards	1.094
kilometers	miles	.621
sq. centimeters	sq. inches	.155
sq. meters	sq. yards	10.764
sq. kilometers	sq. miles	1.196
sq. hectometers	acres	2.471
cubic meters	cubic feet	35.315
milliliters	fluid ounces	.034
liters	pints	2.113
liters	quarts	1.057
grams	ounces	.035
kilograms	pounds	2.205
metric tons	short tons	1.102
pound-feet	newton-meters	1.356

Temperature (Exact)

°F Fahrenheit temperature — 5/9 (after subtracting 32) — Celsius Temperature °C

PIN: 070467-000