This copy is a reprint which includes current pages from Change 3.

***TM 1-1500-204-23-5**

TECHNICAL MANUAL

AVIATION UNIT MAINTENANCE (AVUM) AND AVIATION INTERMEDIATE MAINTENANCE (AVIM) MANUAL

FOR

GENERAL AIRCRAFT MAINTENANCE

(PROPELLER, ROTOR, AND POWERTRAIN MAINTENANCE PRACTICES) VOLUME 5

*This manual together with TM 1-1500-204-23-1 through TM 1-1500-204-23-4 and TM 1-1500-204-23-6 through TM 1-1500-204-23-10, dated 31 July 1992, supersedes TM 55-1500-204-25/1, dated 6 April 1970, including all changes.

DISTRIBUTION STATEMENT A: Approved for public release; distribution is unlimited.

HEADQUARTERS, DEPARTMENT OF THE ARMY
31 JULY 1992

C3

CHANGE

NO. 3

HEADQUARTERS
DEPARTMENT OF THE ARMY
WASHINGTON, D.C., 15 June 1999

AVIATION UNIT MAINTENANCE (AVUM)

AND

AVIATION INTERMEDIATE MAINTENANCE (AVIM) MANUAL

FOR

GENERAL AIRCRAFT MAINTENANCE

(PROPELLER, ROTOR, AND POWERTRAIN)

MAINTENANCE PRACTICES)

DISTRIBUTION STATEMENT A: Approved for public release; distribution is unlimited.

TM 1-1500-204-23-5, dated 31 July 1992, is changed as follows:

1. Remove and insert pages as indicated below. New or changed text material is indicated by a vertical bar in the margin.

Remove pages	Insert pages
----------	A/(B blank)
i/(ii blank)	i/(ii blank)
1-1/(1-2 blank)	1-1 through 1-5/(1-6 blank)
3-3 and 3-4	3-3 and 3-4
----------	3-4.1 through 3-4.21/(3-4.22 blank)
3-5 and 3-6	3-5 and 3-6

2. Retain this sheet in front of manual for reference purposes.

By Order of the Secretary of the Army:

Official:

JOEL B. HUDSON
Administrative Assistant to the Secretary of the Army

9911806

DENNIS J. REIMER
General, United States Army
Chief of Staff

Distribution:
To be distributed in accordance with initial distribution number (IDN) 313302 requirements for TM 1-1500-204-23-5.

CHANGE

NO. 2

HEADQUARTERS
DEPARTMENT OF THE ARMY
WASHINGTON, D.C., 30 April 1996

AVIATION UNIT MAINTENANCE (AVUM)
AND
AVIATION INTERMEDIATE MAINTENANCE (AVIM) MANUAL
FOR
GENERAL AIRCRAFT MAINTENANCE
(PROPELLER, ROTOR, AND POWERTRAIN
MAINTENANCE PRACTICES)

DISTRIBUTION STATEMENT A: Approved for public release; distribution is unlimited

TM 1-1500-204-23-5, dated 31 July 1992, is changed as follows:

1. Remove and insert pages as indicated below. New or changed text material is indicated by a vertical bar in the margin. An illustration change is indicated by a miniature pointing hand.

Remove pages	Insert pages
2-1 and 2-2	2-1 and 2-2
2-9 and 2-10	2-9 and 2-10
2-15 through 2-18	2-15 through 2-18
3-1 and 3-2	3-1 and 3-2
3-5 through 3-14	3-5 through 3-14
4-1 through 4-6	4-1 through 4-6
A-1/(A-2 blank)	A-1/(A-2 blank)
	Index 1 through Index 9/(index 10 blank)

2. Retain this sheet in front of manual for reference purposes.

By Order of the Secretary of the Army:

DENNIS J. REIMER
General United States Army
Chief of Staff

Official:

JOEL B. HUDSON
Acting Administrative Assistant to the
Secretary of the Army
01632

To be distributed in accordance with DA Form 12-31-E, block No. 3302, requirements for TM 1-1500-204-23-5.

☆U.S. GOVERNMENT PRINTING OFFICE: 1996 - 710-115/40131

CHANGE

NO. 1

HEADQUARTERS
DEPARTMENT OF THE ARMY
WASHINGTON, D.C., 31 March 1993

Aviation Unit Maintenance (AVUM) and Aviation Intermediate Maintenance (AVIM) Manual
for
GENERAL AIRCRAFT MAINTENANCE MANUAL
(PROPELLER, ROTOR, AND POWERTRAIN MAINTENANCE PRACTICES)

DISTRIBUTION STATEMENT A: Approved for public release; distribution is unlimited

TM 1-1500-204-23-5, 31 July 1992, is changed as follows:

1. Remove and insert pages as indicated below. New or changed text material is indicated by a vertical bar in the margin. An illustration change is indicated by a miniature pointing hand.

Remove pages	Insert pages
i/(ii blank)	i/(ii blank)
4-5 and 4-6	4-5 and 4-6
Index 1 and Index 2	Index 1 and Index 2

2. Retain this sheet in front of manual for reference purposes.

By Order of the Secretary of the Army:

GORDON R. SULLIVAN
General, United States Army
Chief of Staff

Official:

MILTON H. HAMILTON
Administrative Assistant to the
Secretary of the Army
03993

DISTRIBUTION:
To be distributed in accordance with DA Form 12-31-E, block No. 3302,requirements for TM 1-1500-204-23-5.

TECHNICAL MANUAL

No. 1-1500-204-23-5

HEADQUARTERS
DEPARTMENT OF THE ARMY
Washington, D.C., 31 July 1992

Aviation Unit Maintenance (AVUM) and Aviation Intermediate Maintenance (AVIM) Manual for

General Aircraft Maintenance Manual

(Propeller, Rotor, and Powertrain Maintenance Practices)

Volume 5

REPORTING ERRORS AND RECOMMENDING IMPROVEMENTS

You can help improve this manual. If you find any mistakes or if you know of a way to improve the procedures, please let us know. Mail your letter, DA Form 2028 (Recommended Changes to Publications and Blank Forms), or DA Form 2028-2 located in back of this manual direct to: Commander, U.S. Army Aviation and Missile Command, ATTN: AMSAM-MMC-LS-LP, Redstone Arsenal, Al 35898-5230. E-mail directly to ls-lp@redstone.army.mil. A reply will be furnished to you.

DISTRIBUTION STATFMFNT A: Approved for public release; distribution is unlimited.

TABLE OF CONTENTS

		Page
CHAPTER 1	INTRODUCTION	1-1
CHAPTER 2	PROPELLER MAINTENANCE PRACTICES AND PROCEDURES	2-1
CHAPTER 3	ROTOR MAINTENANCE PRACTICES AND PROCEDURES	3-1
CHAPTER 4	POWERTRAIN MAINTENANCE PRACTICES AND PROCEDURES	4-1
APPENDIX A	REFERENCES	A-1
GLOSSARY	.	Glossary 1
INDEX		Index 1

PRECAUTIONARY DATA

Personnel performing instructions involving operations, procedures, and practices which are included or implied in this technical manual shall observe the following instructions. Disregard of these warnings and precautionary information can cause serious injury, death, or an aborted mission.

WARNINGS, CAUTIONS, and NOTES are means of attracting attention to essential or critical information in a manual. Definitions are outlined as follows:

WARNING: An operating or maintenance procedure, practice, condition, statement, etc., which if not strictly observed, could result in injury or death of personnel.

CAUTION: An operating or maintenance procedure, practice, condition, statement, etc., which if not strictly observed, could result in damage to, or destruction of, equipment or loss of mission effectiveness or long term hazards to personnel.

NOTE: An essential operating or maintenance procedure, condition, or statement, which must be highlighted.

WARNING

ELECTRICAL TESTS

Electrical power up to 500 volts is used in testing the equipment. Exercise extreme caution during these tests.

ELECTRICAL EQUIPMENT

All switches and electrical equipment shall be of the enclosed explosion-proof type. All metal apparatus shall be grounded to avoid the danger of igniting test fluid fumes or creating electrical shock.

USING SOLVENTS/PAINTS

Standard precautions such as fire prevention and adequated ventilation shall be exercised when using solvents or applying primer and coating.

Wear gloves or gauntlets when handling solvents because solvents may cause skin disorders.

Cements and solvents used to repair liferafts are flammable and shall be treated as such. Never smoke or permit any type of open flame near when using cements or solvents.

Dichloromethane (methylene chloride) vapor is heavier than air; adequate ventilation shall be provided for working personnel. Dichloromethane (methyl chloride) is toxic when vapors are inhaled over an extended period of time.

Acrylic monomer and polymer base adhesive, MIL-A-8576, Type II, contains a volatile liquid which may prove toxic when vapors are inhaled over extended periods. Use only with adequate ventilation.

Observe fire precautions when using aliphatic naptha, Federal Specification TT-N-95.

HAND PULLING PROPELLER

Ensure ignition switch is in OFF position.

LUBRICATING OIL

Lubricating oil, MIL-L-7808 or MIL-L-23699, contains an additive which is poisonous and absorbed readily through the skin. Do not allow oil to remain on skin any longer than necessary.

FUEL

When servicing aircraft or support equipment, clean up spilled fuel with cotton mops or cotton rags. Wash off any fuel on hands, body, or clothing.

HANDLING ACID

Wear protective clothing when mixing acid with water. Always pour acid into water, never water into acid.

HANDLING PYROTECHNIC FLARES

Handle pyrotechnic flares with the same care as high explosives.

MAGNESIUM ALLOY FIRE

Do not use water or any standard liquid or foam-type fire extinguishers on a magnesium alloy fire, because they may cause an explosion. Use dry sand or talcum powder, Federal Specification U-T-30.

REMOVING CORROSION

Take precautions to prevent possible dust explosions when removing corrosion from steel alloys. Use goggles or face shield when removing paint or corrosion with a wire brush or by the grinding method.

GROUND SUPPORT EQUIPMENT

Do not attempt to lift any load when the hydraulic axle jack is tilted. To prevent accidental falls, appropriate maintenance platforms/safety stands illustrated in appropriate workstand manuals or any other approved locally procured/manufactured safety stands/restraint equipment will be used when working (above 10 feet) on aircraft in a non-tactical environment.

Install safety lock when an adjustable-height maintenance platform is in use.

Ensure the air hose used with compressed air is safe for the pressure being handled.

Release air pressure in air compressor tank before performing maintenance on air compressors.

Disconnect power before changing belts on electrically-driven compressors.

Disconnect electrical power before opening or disassembling any part of electrical equipment.

FIRE EXTINGUISHERS

Monobromotrifluoromethane (CF_3Br) is highly volatile, but not easily detected by odor. Although nontoxic, CF_3Br shall be considered in the same class as other freons and carbon dioxide, i.e., capable of causing danger to personnel primarily by reduction of oxygen available for proper breathing. The liquid may cause frostbite or low temperature burns if allowed to come in contact with the skin.

Bromochloromethane (CB) is a narcotic agent of moderate intensity, but of prolonged duration. It is considered less toxic than carbon tetrachloride, methylbromide, or the usual products of combustion. Normal precautions should be taken while using bromochloromethane, including the use of supplied breathing air in enclosed spaces.

HYDRAULIC FLUID

To avoid contamination, do not use previously opened cans of hydraulic fluid. A new, sealed can of fluid must be opened and used. When opening can, clean top and use a clean sharp, unplated instrument to prevent contamination.

COMPRESSED AIR

Compressed air shall not be used for cleaning purposes except if reduced to less than 30 psi and then only with effective chip-guarding and personal protective equipment.

NOISE HAZARD

Noise levels reached during ground runup of Army aircraft are of a level that may cause permanent hearing loss. Maintenance personnel shall wear adequate hearing protection when working on aircraft with engines in operation.

TURBINE ENGINE OIL

To avoid contamination, do not use previously opened cans of engine oil. A new sealed can of fluid must be opened and used. When opening can, clean top and use a clean sharp, unplated instrument to prevent contamination.

PROPER USE OF PLATED TOOLS

Use only chrome plated steel or unplated steel tools for disassembly or reassembly procedures described in this manual. Use of cadmium or zinc plated tools is not permitted since these platings are prone to chipping and flaking. Should these chips or flakes become embedded in aircraft parts galvanic corrosion will result. Should these chips or flakes enter fuel or oil wetted components they may eventually clog the filter or produce intergranular attack of nickel or titanium base alloys at elevated temperature. All tools regardless of type plating should be serviceable and free of chipping.

CHAPTER 1
INTRODUCTION

1-1 Purpose. This volume provides general information pertaining to aircraft propeller, rotor, and powertrain maintenance practices and procedures. The application of materials and techniques used on specific aircraft is not covered in this volume. Specific aircraft application, usage, and substitution are found in the individual aircraft maintenance manuals. This volume is of maximum benefit to the mechanic who desires information about propellers, rotors, and powertrains. This volume furnishes the mechanic a source of information about how to perform various mechanical functions which are used on all aircraft. This volume is not a requisitioning authority, and applicable repair parts and special tools list should be consulted to obtain the unit of issue and National Stock Number of the items required for maintenance.

1-2 Scope. General information to guide aircraft maintenance personnel is covered within this volume; however, no attempt has been made to include special parts or equipment which are applicable only to individual or specific aircraft. Propeller maintenance practices and procedures are covered in Chapter NO TAG. Rotor maintenance practices and procedures are discussed in Chapter NO TAG. Powertrain maintenance practices and procedures are presented in Chapter NO TAG.

1-3 Consumable Materials. Refer to TM 1–1500–204–23–6 for consumable materials in this volume.

1-4 Principles of Helicopter Flight. Basic flight theory and aerodynamics are considered in full detail when an aircraft is designed. The rotor repairer must understand these principles in order to maintain aircraft safely and to make repairs that are structurally sound and aerodynamically smooth.

a. *Aerodynamics.* Aerodynamics deals with the motion of air and with the forces acting on objects moving through air or remaining stationary in a current of air. The same principles of aerodynamics apply to both rotary–wing and fixed–wing aircraft. Four forces that affect an aircraft at all times are weight, lift, thrust, and drag:

- Weight is the force exerted on an aircraft by gravity. The pull of gravity acts through the aircraft's center of gravity, which is the point at which an aircraft would balance if suspended. The magnitude of this force changes only with a change in aircraft weight.
- Lift is produced by air passing over the wing an airplane or over the rotor blades of a helicopter. Lift is the force that overcomes the weight of an aircraft so that it can rise in the air.
- Thrust is the force that moves an aircraft through the air. In a conventional fixed–wing aircraft, thrust provided by the propeller moves the plane forward while the wings supply the lift. In a helicopter both thrust and lift are supplied by the main rotor blades.
- Drag is the force of resistance by the air to the passage of an aircraft through it. Thrust force sets an aircraft in motion and keeps it in motion against drag force.

Any device designed to produce lift or thrust when passed through air is an airfoil. Airplane wings, propeller blades, and helicopter main and tail rotor blades are all airfoils (Figure 1-1).

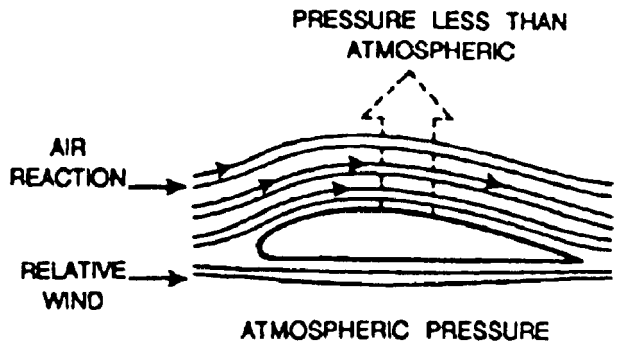

Figure 1-1. Example of an airfoil.

Chord is the distance, or imaginary line, between the leading and the trailing edge of an airfoil. The amount of curve, or departure of the airfoil surface from the chord line, is known as the camber. Upper camber refers to the upper surface; lower camber refers to the lower surface. If the surface is flat, the camber is zero. The camber is positive if the surface is convex (curves outward from the chord line). The camber is negative if the surface is concave (curves inward toward the chord line). The upper surface of an airfoil always has positive camber, but the lowcr surface may have positive, negative, or zero camber (Figure 1-2).

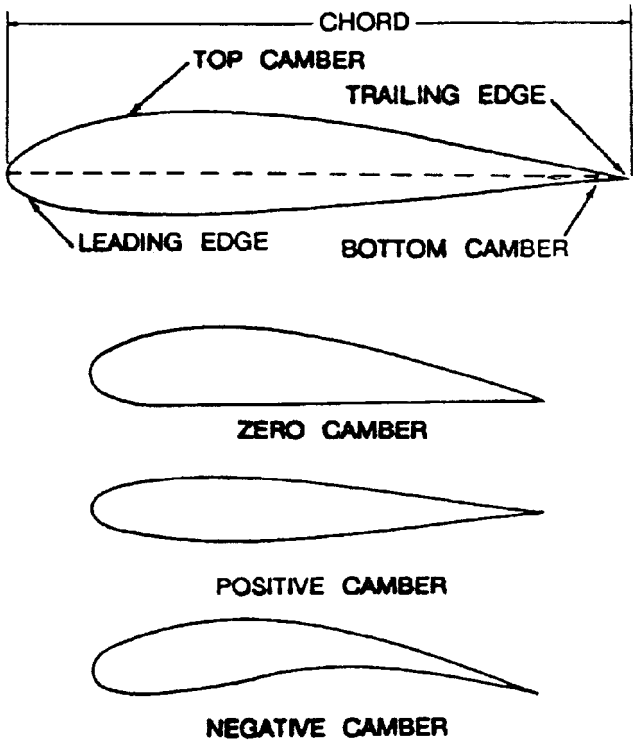

Figure 1-2. Airfoil features.

b. *Bernoulli's Principle.* Bernoulli, an eighteenth century physicist, discovered that air moving over a surface decreases air pressure on the surface (Figure 1-3). As air speed increases, surface air pressure decreases accordingly. This is directly related to the flight of an aircraft. As an airfoil starts moving through the air, it divides the mass of air molecules at its leading edge. The distance across the curved top surface is greater than that across the relatively flat bottom surface. Air molecules that pass over the top must therefore move faster than those passing under the bottom in order to meet at the same time along the trailing edge. The faster airflow across the top surface creates a low-pressure area above the airfoil. Air pressure below the airfoil is greater than the pressure above it and tends to push the airfoil up into the area of lower pressure. As long as air passes over the airfoil, this condition will exist. It is the difference in pressure that causes lift. When air movement is fast enough over a wing or rotor blade, the lift produced matches the weight of the airfoil and its attached parts. This lift is able to support the entire aircraft. As airspeed across the wing or rotor increases further, the lift exceeds the weight of the aircraft and the aircraft rises. Not all of the air met by an airfoil is used in lift. Some of it creates resistance, or drag, that hinders forward motion. Lift and drag increase and decrease together. They are therefore affected by the airfoil's angle of attack into the air, the speed of airflow, the air density, and the shape of the airfoil or wing.

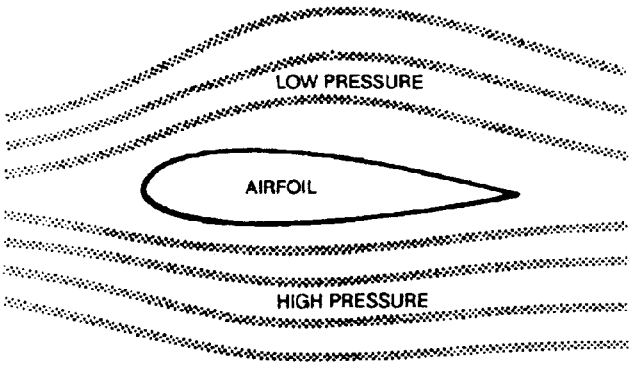

Figure 1-3. Bernoulli's principle.

c. *Lift and Thrust.* The amount of lift that an airfoil can develop depends on five major factors:

- Area (size or surface area of the airfoil).
- Shape (shape or design of the airfoil sections).
- Speed (velocity of the air passing over the airfoil).
- Angle of attack (angle at which the air strikes the airfoil).
- Air density (amount of air in a given space).

(1) Area and Shape. The specific shape and surface area of an airfoil are determined by the aircraft manufacturer. An airfoil may be symmetrical or unsymmetrical, depending on specific requirements. A symmetrical airfoil is designed with an equal amount of camber above and below the airfoil chord line. An unsymmetrical airfoil has a greater amount of camber above the chord line. An airfoil with a smooth surface produces more lift than one with a rough surface. A rough surface creates turbulence, which reduces lift and increases drag.

(2) Speed. The speed of an airfoil can be changed by the speed of the engine or by the angle of the blade. The lift developed by an airfoil increases as speed increases. However, there is a limit to the amount of lift because the drag (resistance) of the airfoil also increases as speed increases.

(3) Angle of Attack. The angle of attack is the angle between the airfoil chord and the direction of relative wind. Direction of airflow in relation to the airfoil is called relative wind. Lift increases as the angle of attack

increases up to a certain point. If the angle of attack becomes too great, airflow over the top of the airfoil tends to lose its streamlined path and break away from the contoured surface to form eddies (burbles) near the trailing edge. When this happens, the airfoil loses its lift, and it stalls. The angle of attack at which burbling takes place is called the critical angle of attack.

(4) Air Density. The density (thickness) of the air plays an important part in the amount of lift an airfoil is able to make. The air nearest the earth's surface is much denser than air at higher altitudes. Therefore, an aircraft or helicopter can achieve more lift near the ground than at a high altitude. While keeping at the same speed and angle of attack, an airfoil will slowly make less lift as it climbs higher and higher.

d. *Airfoil Stability.*

(1) Center of Pressure. The resultant lift produced by an airfoil is the difference between the drag and lift pressures of its upper and lower surfaces. The point on the airfoil chord line where the resultant lift is effectively concentrated is called the center of pressure. The center of pressure of a symmetrical airfoil remains in one position at all angles of attack. When the angle of attack of an unsymmetrical airfoil changes, the center of pressure changes accordingly: the center of pressure moves forward with an increase in angle of attack, and the center of pressure moves backward with a decrease in angle of attack.

(2) Airfoil Aerodynamic Center. The aerodynamic center of an airfoil is the point along the chord line about which the airfoil tends to rotate when the center of pressure moves forward or backward between the leading and trailing edges.

(3) Torque. According to Newton's third law of motion, for every action there is an equal and opposite reaction. As a helicopter main rotor or an airplane propeller turns in one direction, the aircraft fuselage tends to rotate in the opposite direction. This effect is called torque. Solutions must be found to counteract and control torque during flight. In helicopters torque is applied in a horizontal rather than a vertical plane. The reaction is therefore greater because the rotor is long and heavy relative to the fuselage, and forward speed is not always present to correct the twisting effect.

(4) Gyroscopic Precession. If a force is applied against a rotating body, the reaction will be about 90 from the point of application, in the direction of rotation. This unusual fact is known as gyroscopic precession. It pertains to all rotating bodies. For example, if you push the 3–o'clock point on a clockwise rotating wheel, the wheel would move as if it had been pushed at the 6–o'clock point. The rotors on helicopters act as gyroscopes and are therefore subject to the action of gyroscopic precession.

e. *Stress.* Stress is a force placed on a body measured in terms of force (pounds) per unit area (square inches). Aircraft design engineers design aircraft to meet–even to exceed–strength requirements of military service. Since Army aircraft are operated under combat conditions, they might exceed these design limits. Therefore, maintenance personnel must check constantly for failures and for signs of approaching failure in aircraft structural units. Stress may take the form of compression, torsion, tension, bending, or shear or may be a combination of two or more of these forces (Figure 1-4):

- **D** Compression is resistance to being pushed together or crushed. Compression is produced by two forces pushing toward each other in the same straight line. The landing struts of an aircraft are under compression after landing.
- **D** Torsion is resistance to twisting. A torsional forced is produced when an engine turns a crankshaft. Torque is the force that produces torsion.
- **D** Tension is resistance to being pulled apart or stretched. Tension is produced by two forces pulling in opposite directions along the same straight line. Pilots put the cables of a control system under tension when they operate the controls.
- **D** Bending is a combination of tension and compression. The inside curve of the bend is under compression, and the outside curve is under tension. Helicopter main rotor blades are subjected to bending.
- **D** Shear is the stress exerted when two pieces of metal fastened together are separated by, sliding one over the other in opposite directions. When force is applied to two pieces of metal fastened together by rivets or bolts, sliding them across each other, the rivets or bolts are subjected to shear. Stress will cut off the bolt or rivet like a pair of shears. Generally, rivets are subjected to shear only, but bolts may be stressed by shear and tension. There is internal shear in all parts being bent such as the skin of sheet metal structures.

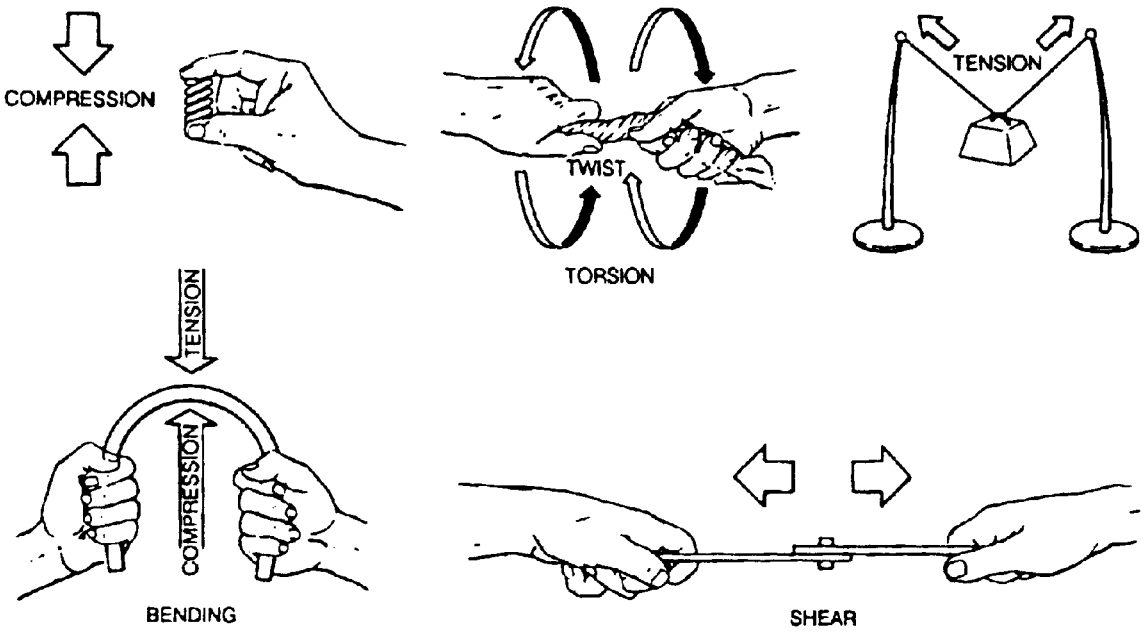

Figure 1-4. Types of stresses.

f. *Levers and Moment of Force.* A lever isa useful device found in tools such as jacks, shears, wrenches, and pliers To use tools and balancing procedures correctly, the repairer needs to understand moment of force (amount of leverage).

(1) Levers. Levers are classified as three types according to the position of the applied force (effort), the resistance, and the fulcrum (the pivot point) (Figure 1-5). In Type 1 the fulcrum is located between the applied effort and the resistance. In Type 2 the resistance is located between the fulcrum and the applied effort. In Type 3 the applied effort is located between the resistance and the fulcrum.

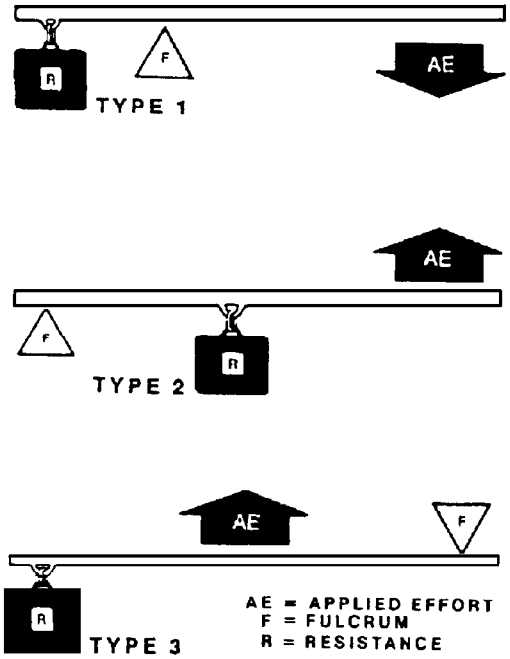

Figure 1-5. Types of levers.

Mechanical advantage is the ratio between the resistance and the effort applied to a lever. This is expressed in the following formula:

$$MA = \frac{R}{E}$$

MA = mechanical advantage

R = resisting force (weight moved)

E = effort (applied force)

Proper use of mechanical advantage enables a relatively small force to overcome a larger resisting force by applying the effort through a longer distance than the resistance is moved. For example, to lift a 4–pound weight (R) which is 2 inches from the fulcrum of a Type 1 lever requires 1 pound of effort (E) applied 8 inches from the fulcrum. The mechanical advantage of this lever would be as follows:

$$MA = \frac{R}{E} = \frac{4}{1} = 4$$

Thus, the applied effort in the example would move through a distance that is four times greater than the distance the resistance would move.

(2) Moment of Force. A moment of force is the product of a force or weight and a distance. To find a lever's moment of force, multiply the applied effort by the distance between the point of effort application and the pivot point (fulcrum). If the moment of force of the applied effort equals the moment of force of the resistance, the lever will balance. If an object to be balanced on a Type 1 lever weighs 4 pounds and is located 2 inches from the fulcrum, it could be balanced by a 2–pound effort applied 4 inches from the fulcrum on the opposite side or by a 1–pound effort applied 8 inches from the fulcrum.

g. Vibration. Any type of machine vibrates. However, greater than normal vibration usually means that there is a malfunction. Malfunctions can be caused by worn bearings, out–of–balance conditions, or loose hardware. If allowed to continue unchecked, vibrations can cause material failure or machine destruction. Aircraft – particularly helicopters – have a high vibration level due to their many moving parts. Designers have been forced to use many different dampening and counteracting methods to keep vibrations at acceptable levels. Some examples are:

- Driving secondary parts at different speeds to reduce harmonic vibrations; this method removes much of the vibration buildup.
- Mounting high–level vibration parts such as drive shafting on shock–absorbent mounts.
- Installing vibration absorbers in high–level vibration areas of the airframe.

(1) Lateral. Lateral vibrations are evident in side–to–side swinging rhythms. An out–of–balance rotor blade causes this type of vibration. Lateral vibrations in helicopter rotor systems are quite common.

(2) Vertical. Vertical vibrations are evident in up–and–down movement that produces a thumping effect. An out–of–track rotor blade causes this type vibration.

(3) High–Frequency. High–frequency vibrations are evident in buzzing and a numbing effect on the feet and fingers of crew members. High–frequency vibrations are caused by an out–of–balance condition or a high–speed, moving part that has been torqued incorrectly. The balancing of high–speed parts is very important. Any build–up of dirt, grease, or fluid on or inside such a part (drive shafting, for example) causes a high–frequency vibration. This type vibration is more dangerous than a lateral or vertical one because it causes crystallization of metal, which weakens it. This vibration must be corrected before the equipment can be operated.

(4) Ground Resonance. Ground resonance is the most dangerous and destructive of the vibrations discussed here. Ground resonance can destroy a helicopter in a matter of seconds. It is present in helicopters with articulated rotor heads. Ground resonance occurs while the helicopter is on the ground with rotors turning; it will not happen in flight. Ground resonance results when unbalanced forces in the rotor system cause the helicopter to rock on the landing gear at or near its natural frequency. Correcting this problem is difficult because the natural frequency of the helicopter changes as lift is applied to the rotors. With all parts working properly, the design of the helicopter landing gear, shock struts, and rotor blade lag dampeners will prevent the resonance building up to dangerous levels. Improper adjustment of the landing gear shock struts, incorrect tire pressure, and defective rotor blade lag dampeners may cause ground resonance. The quickest way to remove ground resonance is to hover the helicopter clear of the ground.

CHAPTER 2

PROPELLER MAINTENANCE PRACTICES AND PROCEDURES

2-1. General. The propeller maintenance practices and procedures discussed in this chapter are representative of those in widespread use. No attempt has been made to include detailed maintenance procedures for a specific propeller. Refer to the applicable maintenance manual for specific maintenance procedures

2-2. General Shop Rules. The practices and procedures described in this chapter pertain to the repair functions of aviation activities and are applicable to all levels of maintenance. Because of the many types of Army aircraft, each shop within the manufacturing and repair section must, of necessity, have personnel trained in general practices and procedures to the extent that different type and model aircraft do not upset a smooth running shop.

a. Responsibility. All supervisory personnel in the manufacturing section are responsible for a continuing and effective shop safety program. To implement and maintain this program, shop supervisors shall utilize bulletin boards, signs, and any other effective method. Shop personnel shall cooperate in the shop safety program by making helpful recommendations and continually exercising care and caution in the operation of all shop equipment. All shop personnel shall strive to improve the safety program and be especially alert to observe and correct hazardous conditions and unsafe shop practices. All accidents, no matter how minor, shall be reported to the shop supervisor, and all published instructions regarding safety shall be strictly adhered to. Also, safety engineers and safety officers shall ensure that proper safety procedures are adhered to in accordance with AR 385-10, Army Safety Program; AR 385-30, Safety Color Code Markings and Signs; AR 385-32, Protective Clothing and Equipment; The Occupational Safety and Health Act of 1971, OSHA 1910.251, all applicable fire codes, NFPA 410; and other accepted civilian and military safety practices.

b. Shop Housekeeping. Housekeeping is the yardstick by which the shops in the manufacturing section are judged. A clean, well-arranged shop is a safe shop and reflects credit on all personnel concerned with its operation. The following shop practices shall be observed:

(1) Oil pans or drip pans shall be used when leaking oil, grease, and similar material may cause hazardous accumulations on equipment or floors. All spills shall be cleaned up immediately. Approved sweeping compound may be used to remove these materials from the floor.

CAUTION

Floors shall not be cleaned with volatile or flammable liquids. A flammable film may remain and cause a fire hazard.

(2) Floors shall be maintained smooth and clean, free of all obstructions and slippery substances. Holes and irregularities in floors shall be repaired to maintain a level surface free from tripping hazards.

(3) All unnecessary materials on walls shall be removed and projections shall be kept to a minimum.

(4) Aisles shall be dearly defined and kept free of hazardous obstructions. Where possible, aisles shall be suitably marked by painting.

(5) All machines, work benches, aisles, etc., shall be adequately illuminated.

c. Shop Safety. Unsafe equipment and fire hazards are the main factors to be observed while planning safety procedures.

(1) Equipment safety. Unsafe equipment shall be reported immediately. The following equipment safety practices shall be observed:

(a) Machines shall be located to provide operators with sufficient space to handle materials and perform job operations without interference.

(b) Boltdown all machinery that can move or walk due to vibration (drill press, bench grinder, etc.).

(c) Substantial low resistance conductors shall be used to ground all stationary and portable machines, equipment, or other devices in which static charges may be generated or which require electrical circuits of a hazardous nature.

(d) Shop machinery shall be operated only by qualified personnel observing safe practices.

(e) Safety devices, such as guards, interlocks, automatic releases, and stops, shall always be kept in operating condition.

(f) Ensure that all unauthorized personnel are dear of area before opening valves or energizing electrical circuits for starting machinery.

(g) Suitable mechanical guards, such as enclosures or barricades, shall be permanently installed on all machinery not already equipped with such to eliminate danger of injury from moving parts.

(h) Machinery shall not be adjusted, repaired, oiled, or cleaned while machine is in operation or power is on.

(i) Personnel operating machinery shall wear protective clothing as prescribed. A protective face shield or goggles shall be worn when operating a grinder regardless of whether grinder is equipped with attached shields.

(j) Jewelry shall not be worn while performing any maintenance.

(2) *Fire safety*. A constant vigilance shall be maintained to seek out fire hazards. Fire hazards are constantly present in the shop where sparks, friction, or careless handling can cause an explosion that may destroy equipment or buildings, and injure or kill personnel. Refer to AR 385-10, The Army Safety Program and The Occupational Safety and Health Act of 1971. The following fire safety practices shall be observed:

(a) NO SMOKING signs shall be placed in areas where smoking could create a fire hazard.

(b) Personnel shall be trained in the use, knowledge, and location of shop fire fighting equipment.

(c) Each shop shall be equipped with fire extinguishers suited for type of fire most likely to occur.

(d) Use correct fire extinguishers for class of fire as follows:

- Class A fire (wood, paper, trash, etc.). Use water or soda-acid fire extinguisher.
- Class B fire (oil, paint, fuel, grease, etc.). Use bromotrifluoromethane or carbon dioxide fire extinguisher.
- Class C fire (electrical equipment). Use bromotrifluoromethane or carbon dioxide fire extinguisher.
- Class D fire (combustible metals - magnesium, titanium, zirconium, sodium, lithium, and potassium). Use dry powder type fire extinguisher.

(e) Oily waste, rags, and similar combustible materials shall be discarded in self-closing metal containers which shall be emptied daily.

(f) Flammable materials shall not be stored in the shop.

(g) Use only approved cleaning solvents.

d. Shop Tools And Materials. Handling tools and materials require observance of the following common safety practices:

(1) Do not leave tools or objects in elevated positions from which they can fall or be knocked off.

(2) Do not point a compressed airstream toward any part of the body.

(3) All unserviceable tools shall be plainly marked and removed from service.

(4) Electrical cables and air hoses to portable units shall be laid out so there is no danger of tripping.

(5) Electrical tools shall be connected to a low resistance ground.

(6) Keep bench tops covered with material hard enough to prevent chips and other foreign material from becoming imbedded. Keep bench tops clean and free from chips and filings.

(7) Keep vise jaws covered with soft metal jaw caps.

2-3. Propeller Theory. The aircraft propeller consists of two or more blades and a central hub to which the blades are attached. Each blade of an aircraft propeller is essentially a rotating wing. As a result of their construction, the propeller blades produce forces that create thrust to pull or push the airplane through the air. The power needed to rotate the propeller blades is furnished by the engine. The propeller is mounted on a shaft, which may be an extension of the crankshaft on low-horsepower engines; on high-horsepower engines, it is mounted on a propeller shaft which is geared to the engine crankshaft. In either case, the engine rotates the air foils of the blades through the air at high speeds, and the propeller transforms the rotary power of the engine into thrust.

2-4. Propeller Model and Blade Designation. Propellers are identified by stamping the propeller hub with the serial number, model number, production certificate number, and the number of times the propeller has been reconditioned. The complete model number of the propeller is a combination of the basic model number and suffix numbers to indicate the propeller diameter and pitch. An explanation of a complete model number, using the McCauley 1B90/CM propeller, is vided in table 2-1.

a. Hartzell Constant-Speed Propeller. The Hartzell constant-speed propeller uses a hydraulic piston-cylinder element, as shown in figure 2-1, to control the pitch of the blades. When the engine speed is below that selected by the pilot, the governor pilot valve directs governor oil pressure to the propeller. This pressure forces the cylinder forward, compressing the feathering spring, and reducing the propeller pitch. When the engine speed is above that selected by the pilot, the governor opens the oil passage to allow the oil in the propeller cylinder to return to the engine. The feathering spring and the counterweight force cause the blades to rotate to a higher pitch position. (See figure 2-2).

b. Turboprop Propeller. The turboprop propeller is operated by a gas turbine engine through a reduction gear assembly. The turboprop fuel control and the propeller governor are connected and operate in coordination with each other. The power lever directs a signal from the cockpit to the fuel control for a specific amount of power from the engine. The fuel control and the propeller governor together establish the correct combination of rpm, fuel flow, and propeller blade angle to create sufficient propeller thrust to provide the desired power.

Table 2-1. Propeller Model Number

Number	Explanation
1B90/ CM 71 44	Basic model number.
44	Inches pitch at 0.75 radius.
71	Propeller diameter, inches.
CM	CF Denotes installation on SAE No. 1 flanged shat; elliptical blade tips. CH Denotes assembly with Continental Motors Corp. hub; elliptical tips. CM Denotes installation on SAE No. 1 flanged shaft; square blade tips. LF Denotes installation on SAE No. 2 flanged shaft with McCauley C-1210 adapter; elliptical blade tips. LM Denotes installation on SAE No. 2 flanged shaft with McCauley C-1210 adapter; square blade tips.
1B90/	Basic design number (planform, etc.)

c. Feathering Propeller. A feathering propeller is a controllable propeller having a mechanism to change the pitch to an angle so that forward aircraft motion produces a minimum windmilling effect on a power-off propeller. Feathering propellers must be used on multiengine aircraft to reduce propeller drag to a minimum under engine failure conditions.

d. Reverse-Pitch Propeller. The reverse-pitch propeller is a controllable propeller in which the blade angles can be changed to a negative value during operation. The purpose of the reversible-pitch feature is to produce a high negative thrust at low speed by using engine power. Although reverse-pitch may be used in flight for steep descents, it is used principally as an aerodynamic brake to reduce ground roll after landing.

2-5. Propeller Efficiency. A propeller is used with an engine to provide thrust. The engine supplies brake horsepower through a rotating shaft. The propeller absorbs the brake horsepower and converts it into thrust horsepower. Propeller efficiency is the ratio of thrust horsepower. Thrust horsepower usually constitutes approximately 80 percent of the brake horsepower. The other 20 percent is lost in friction and slippage. Controlling the blade angle of the propeller is the best method of obtaining maximum propeller efficiency for all conditions encountered in flight.

2-6. Engine Efficiency. Mechanical, thermal, and volumetric efficiency are explained in the following paragraphs.

a. Mechanical Efficiency. The mechanical efficiency of an engine is measured by the ratio of the shaft output or brake horsepower to the indicated horsepower or power developed in the cylinders. It can be expressed by the following formula:

$$\text{Mechanical efficiency} = \frac{\text{Brake horsepower}}{\text{Indicated horsepower}}$$

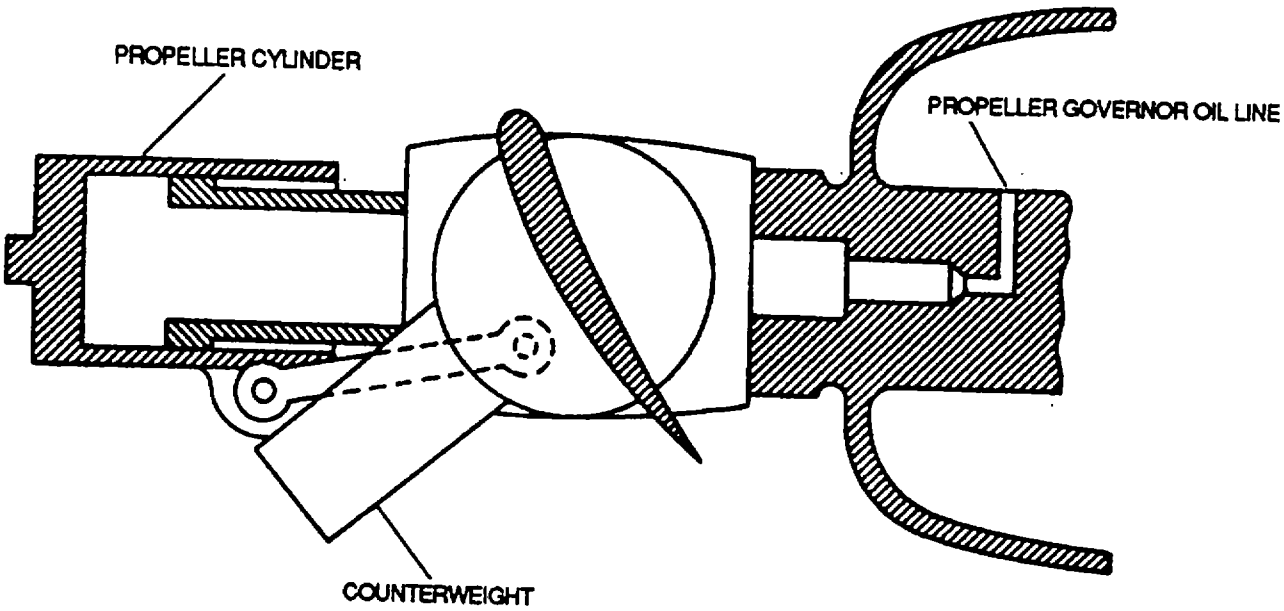

Figure 2-1. Hartzell Pitch Change Mechanism

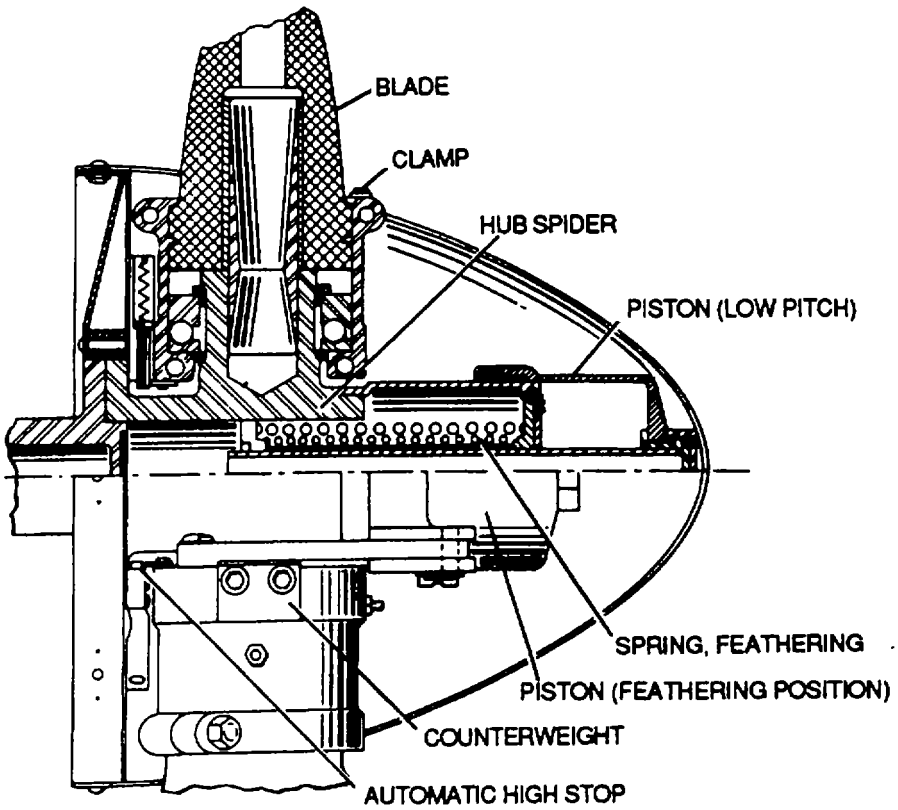

Figure 2-2. Hartzell Constant-Speed Propellor

b. Thermal Efficiency. The thermal efficiency of an engine is the ratio of the heat developed into the useful work to the heat energy of the fuel. It may be based on either brake horsepower or indicated horsepower. It can be expressed by the following formula:

$$\text{Thermal Efficiency} = \frac{\text{Indicated horsepower} \times 33{,}000}{\text{Weight of fuel burned per minute} \times \text{Heat value (Btu)} \times 778}$$

c. Volumetric Efficiency. Volumetric efficiency is the ratio of the volume of fuel-air charge, burned by the engine at atmospheric pressure and temperature, to the piston displacement. If the cylinder of an engine draws in a charge of fuel and air having a volume at standard atmospheric pressure and temperature which is exactly equal to the piston displacement of the cylinder, the cylinder has a volumetric efficiency of 100 percent. It can be expressed by the following formula:

$$\text{Volumetric efficiency} = \frac{\text{Volume of charge at atmospheric pressure}}{\text{Piston Displacement}}$$

2-7. Propeller Defects. Propeller defects are defined in table 2-2.

2-8. Troubleshooting Procedures. Troubleshooting procedures for isolating and correcting various troubles in the propeller system are found in applicable maintenance manual.

2-9. Propeller Removal, Cleaning, and Inspection. General procedures for propeller removal, cleaning, and inspection are described in the following paragraphs.

a. Propeller Removal. Propeller removal is explained in the applicable maintenance manual.

WARNING

Dry cleaning solvent is flammable and solvent vapors are toxic. Use P-D-680, Type II Solvent in a well-ventilated area. Keep away from open flames. Avoid prolonged solvent contact with skin.

Table 2-2. Propeller Defects

Defect	Definition
Battered	A damaged or worn area caused by hard usage or heavy blows.
Binding	An area of damage caused by parts sticking together.
Blistering	Raised areas of plate indicative of a lack of bond between plating and base metal or overheating above the melting temperature of the plating material.
Bowed	A bent blade usually caused by foreign objects.
Brinelled	Having one or more indentations on bearing races, usually caused by high static loads or application of force during installation or removal. Indentations are rounded or spherical due to the impression left by the contacting balls or rollers of the bearing.
Burr	A ragged or turned out edge usually resulting from machine processing.
Chafing	A condition caused by a rubbing action between two parts under light pressure which results in wear.
Checked	A condition in which there are numerous small cracks in the metal, usually caused by machine processing.
Chipping	The breaking away of pieces of material which is usually caused by excessive stress concentration or careless handling.
Circumferential Scratching	Damage from scratching on the external boundary or surface of an object.
Corrosion	Loss of metal by a chemical or electrochemical action. The corrosion products generally are easily removed by mechanical means. Iron rust is an example of corrosion.
Crack	A partial separation of material usually caused by vibration, over-loading, internal stresses, defective assembly, or fatigue. Depth may be a few thousandths to the full thickness of the piece.
Dent	A small, rounded depression in a surface usually caused by the part being struck with a rounded object.
Deposits	Material that has accumulated in recessed areas.
Discoloration	Discoloration is due to the effects of heat in the presence of oxygen. Surface colors may range from light straw to gray depending on the environment temperature and the thickness of the oxide film that is formed on the surface.

Table 2-2. Propeller Defects - CONT

Defect	Definition
	NOTE **Discoloration due to synthetic engine oils should not be confused with heat discoloration. Additives in Specification MIL-L-23699 oil react with steel surfaces to form a brownish color stain. This stain is not detrimental and should not be removed.**
Disintegrated	A part which breaks or decomposes into small objects.
Distortion	Distortion is caused by forces which twist the piece from its original shape.
Eccentric	Damage not having the same geometric center.
Erosion	Loss of metal from the surface by mechanical action of foreign objects, such as grit or fine sand. The eroded area will be rough and may be lined in the direction in which the foreign material moved relative to the surface.
Flaking	The breaking loose of small pieces of metal or coated surfaces, which is usually caused by defective plating or excessive loading.
Fracture	A break through the entire thickness of the material.
Frayed	An area worn by rubbing actions.
Fretting	A rapid oxidation of metal surfaces caused by cyclic back-and-forth movement of closely fitted parts in the presence of oxygen. It is characterized by rusty surfaces ranging from black (well bonded) to a fairly bright brick red color (often loosely bonded or even free particles).
Galling	A severe condition of chafing or fretting in which a transfer of metal from one part to another occurs. It is usually caused by a slight movement of mated parts having limited relative motion and under high loads.
Glazed	Damage which appears smooth and glossy.
Gouging	A furrowing condition in which a displacement of metal has occurred (a torn effect). It is usually caused by a piece of metal or foreign material between close moving parts.
Grooving	A recess or channel with rounded and smooth edges usually caused by faulty alignment of parts.
Indentation	Shallow depressions in the functional surfaces where metal has been displaced but not removed. They are usually rounded, having the shape of the foreign particle, and the original surface finish can still be seen in the depressions.

Table 2-2. Propeller Defects - CONT

Defect	Definition
Mismatched	Damage caused when two parts are improperly matched.
Nick	A sharp sided gouge or depression with a V-shaped bottom which is generally the result of careless handling of tools and parts.
Out-of-Round	A damaged hole which does not have the same concentric center.
Pickup	A buildup or rolling of metal from one area to another, which is usually caused by insufficient lubrication, clearances, or foreign matter.
Pitting	Small, irregularly shaped cavities from which material has been removed by corrosion. Corrosion can be caused by oxidation (rust), acid attack (etching, perspiration), electrolytic attack (non-distilled water). The bottom surfaces of the cavities are usually dark.
Scoring	A series of deep scratches caused by foreign particles between moving parts, or careless assembly or disassembly techniques.
Scratches	Shallow, thin lines or marks, varying in degree of depth and width, caused by presence of fine foreign particles during operation or contact with other parts during handling.
Sheared	Damage caused when a part is stressed in two different directions.
Spalling	The breakdown of a functional/active surface due to fatigue, usually in the form of irregularly shaped pits. The edges of the pits have indications of cracking and further progression.
Stripped	Damaged or unusable threads of a bolt or screw.
Surface Breakdown	Breakdown of surface material caused by corrosion.

CAUTION

Acid or caustic materials should not be used. Power buffers, steel wool, steel brushes, or any other tool or substance that may scratch or mar the blade should be avoided.

b. Propeller Cleaning. Propeller blades and hubs are cleaned with dry cleaning solvent, Federal Specification P-D-680 and in accordance with the applicable maintenance manual.

NOTE

If a high polish is desired, a number of good grades of commercial metal polish are available. After completing the polishing operation, all traces of polish should be immediately removed. When the blades are clean, they should be coated with a clean film of engine oil or suitable equivalent.

c. Propeller Inspection. Inspect propellers regularly in accordance with the applicable maintenance manual. The following paragraphs explain general inspection procedures.

(1) General inspection. Propellers must be inspected regularly. The exact time interval for particular propeller inspections is usually specified by the propeller manufacturer. The regular daily inspection of propellers varies little from one type to another. Typically it is a visual inspection of propeller blades, hubs, controls, and accessories for security, safety, and general condition. Visual inspection of the blades does not mean a careless or casual observation. The inspection should be meticulous enough to detect any flaw or defect that may exist.

(2) Checking hub for looseness. Check to make sure bolts are properly installed and tightened. If nuts can be turned, remove cotter keys and retorque to required setting.

(3) Checking blades for looseness. Check to see that blades are properly installed in accordance with the applicable maintenance manual.

(4) Checking external surfaces for metal propellers. Metal propellers and blades are generally susceptible to fatigue failure resulting from concentration of stresses at the bottom of sharp nicks, cuts, and scratches. It is especially necessary, therefore, to frequently and carefully inspect them for such injuries. Propeller manufacturers have published service bulletins and instructions which prescribe the manner in which these inspections are to be accomplished.

(5) Checking propeller governor. Check propeller governor for leakage, security of attachment, and general condition. Inspect governor oil for metal particles.

(6) Inspection of a disassembled propeller. During major overhaul, the propeller is disassembled, and all parts are inspected and checked for size, tolerances, and wear. A magnetic inspection or another type of nondestructive test is usually made at this time to determine whether any fatigue cracks have developed on the steel components and assemblies.

(7) Local etching. Local etching is used to detect cracks on propellers. Use the following procedures:

(a) Local etching shall be performed with a solution locally prepared by adding one pound of sodium hydroxide, technical, Federal Specification O-S-598, to one gallon of water. Amount of solution to be prepared will be determined by amount of etching to be performed.

(b) Clean and smooth area containing apparent crack by sanding area with No. 00 sandpaper or crocus cloth, Federal Specification P-C-458.

CAUTION

Do not allow sodium hydroxide or nitric acid solution to contact blade thrust washer. Damage to thrust washer may otherwise result.

(c) Apply a small quantity of sodium hydroxide solution mixed in accordance with para 2-9.c. (7)(a) to suspected area with a small brush or swab.

CAUTION

Upon completion of etching, all traces of sodium hydroxide shall be removed with a solution of one part concentrated technical grade propellant nitric acid, Federal Specification O-N-350, to five parts water. Wash blade thoroughly with clean, fresh water. The blade shall then be dried and anodized with chromic acid solution in accordance with MIL-A-8625 after completion of all reworking. Damage to propeller may otherwise result.

(d) After area is well darkened, thoroughly wipe with a dampened cloth. When a crack extending into metal exists, it will appear as a dark line or mark, and by using a magnifying glass, small bubbles may be seen forming in the line or mark

2-10. Propeller Repair. Repair propellers in accordance with the best accepted practices and the latest techniques. Manufacturer recommendations shall be followed. It is necessary to mark the name of the manufacturer and model designation on the repaired propeller in the event original markings were removed during the repair or refinishing operations.

a. Minor Defects. Dents, cuts, scars, scratches, nicks, etc., shall be removed or otherwise treated by means of fine sandpaper and fine-cut files provided that their removal or treatment does not materially weaken the blade, materially reduce its weight, or materially impair its performance or reduce the blade dimensions below the minimums established by the manufacturer. Minimums will usually be given in the manufacturer's service and overhaul manual. The metal around longitudinal surface cracks, narrow cuts, and shallow scratches shall be removed to form shallow saucer-shaped depressions, as shown in figure 2-3.

b. Tip Damage. When the removal or treatment of defects on the tip necessitates shortening a blade, shorten each blade used with it and keep such sets of blades together (see figure 2-4 and 2-5.). In making the repair, it is not permissible to reduce the propeller diameter below the minimum diameter limit shown on the airplane specification.

c. Bends and Twists. Repair methods for bends and twists are explained in the following paragraphs.

(1) Cold straightening. Repair bent blades in accordance with the instructions of the manufacturer. Carefully check the extent of a bend in face alignment by means of a protractor similar to the one shown in figure 2-6. Only bends not exceeding 20 degrees at 0.15-inch blade thickness to O degrees at 1.1-inch blade thickness may be cold straightened. Straighten blades with bends exceeding these values only based upon recommendation of the manufacturer, and only at the facilities having proper heat-treatment equipment. In all cases, inspect the blades for cracks and other injuries both before and after straightening.

(2) Annealing method. Repair by annealing consists of heating the alloys to an elevated temperature, holding or soaking them at this temperature for a length of time depending upon the mass of the metal, and the cooling in still air. This method leaves the metal in the best condition for cold-working.

(3) Hub damage. Repairs to steel hubs and parts shall be accomplished only in accordance with the recommendations of the manufacturer. Welding and remachining is permissible only when covered by manufacturers service bulletins.

(4) Spinner damage. Check for evidence of dents, cracks or other visible damage. Replace if damaged. Dents are permissible, provided they do not affect propeller appearance while it is turning.

(5) Marking repaired blades. Mark the blades to correspond with the manufacturer's system of model designation to indicate propeller diameter.

(6) Painting. Paint in accordance with instructions contained in TM 55-1500-345-23.

2-11. Propeller Balancing. Propellers must be balanced statically, dynamically, and aerodynamically.

a. Static Balancing. Propeller static unbalance occurs when the center of gravity of the propeller does not coincide with the axis of rotation. Two methods of static balancing are described in the following paragraphs.

NOTE

- **During a propeller static balance check, all blades must be at the same blade angle. Before conducting the balance check, inspect to see that each blade has been set at the same blade angle.**

- **Unless otherwise specified by the manufacturer, an acceptable balance check requires that the propeller assembly have no tendency to rotate in any of the positions previously described. If the propeller balances perfectly in all positions, it should also balance perfectly in all intermediate positions. When necessary, check for balance in intermediate positions to verify the check in the originally describe positions.**

(1) Knife-edge method. The knife-edge test stand, as shown in figure 2-7, has two hardened steel edges mounted to allow the free rotation of an assembled propeller between them. The knife-edge test stand shall be located in a room or area that is free from any air motion, and preferably removed from any source of heavy vibration. The standard method of checking propeller assembly balance involves the following procedures:

(a) Insert a bushing in the engine shaft hole of the propeller.

(b) Insert a mandrel or arbor through the bushing.

(c) Place a propeller assembly so that the ends of the arbor are supported upon the balance stand knife-edges. The propeller must be free to rotate.

(d) Check two-bladed propeller assemblies for balance, first with the blades in a vertical position and then with the blades in a horizontal position, as shown in figure 2-7. Repeat the vertical position check with the blade positions reversed; that is, with the blade which was checked in the downward position placed in the upward position.

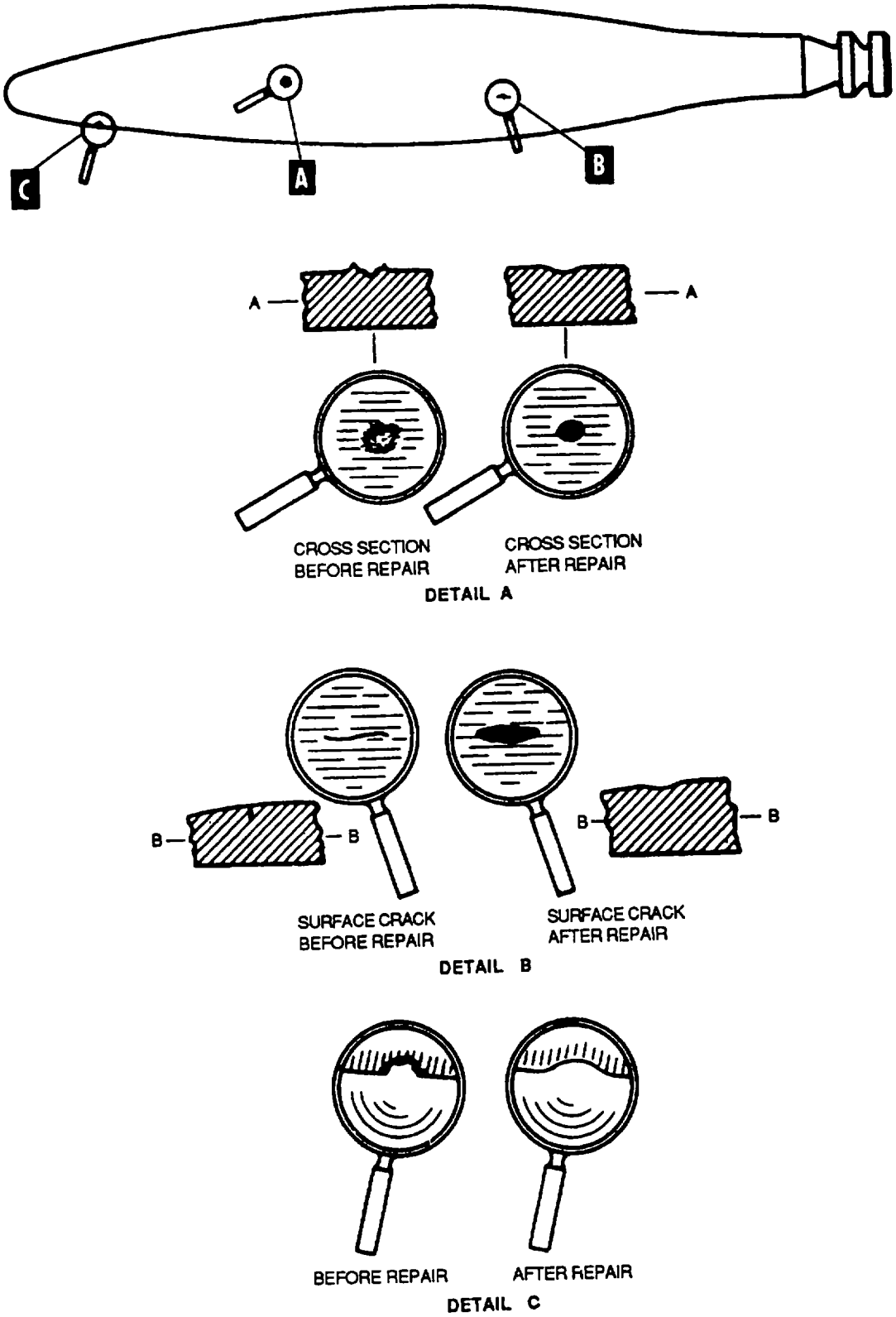

Figure 2-3. Repair Of Surface Defects

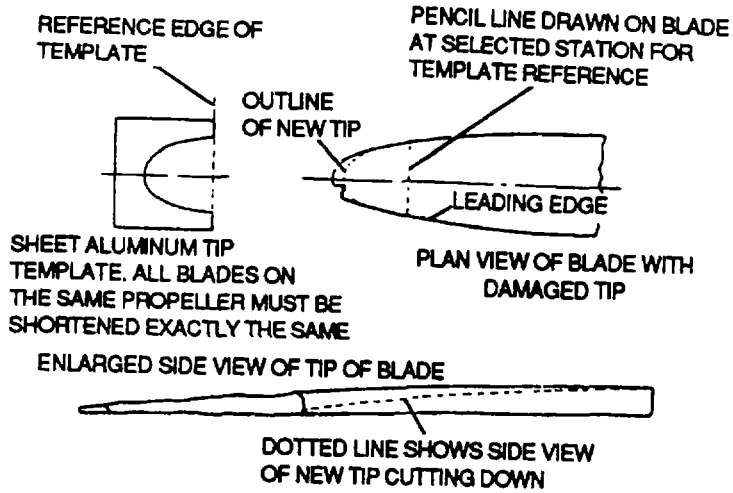

Figure 2-4. Damaged Tip Repair

(e) Check three-bladed propeller assembly with each blade placed in a downward vertical position, as shown in figure 2-8.

(2) *Suspension method.* In the suspension method, the propeller or part is hung by a cord, any unbalance is determined by noting the eccentricity between a disk firmly attached to the cord and a cylinder attached to the assembly or part being tested. The suspension method is used less frequently than the simpler and more accurate knife-edge method.

b. *Aerodynamic Balancing.* Aerodynamic unbalance results when the thrust (or pull) of the blades is unequal. This type of unbalance can be largely eliminated by checking blade contour and blade angle setting.

c. *Dynamic Balancing.* Dynamic unbalance results when the center of gravity of similar propeller elements, such as blades on counterweights, does not follow in the same plane of rotation. Since the length of the propeller assembly along the engine crankshaft is short in comparison to its diameter, and since the blades are secured to the hub so they lie in the same plane perpendicular to the running axis, the dynamic unbalance resulting from improper mass distribution is negligible, provided the track tolerance requirements are met.

d. *Blade Tracking.* Blade tracking is the process of determining the positions of the tips of the propeller blades relative to each other. The blades should all track one another as closely as possible. The difference in track at like points must not exceed the tolerance specified by the propeller manufacturer. Use the following procedures to check blade tracking:

(1) Mount indicator, which may be a slender point strip of wood or metal, on a stand, as shown in figure 2-9. Point of indicator should just touch nearest part of the blade.

(2) Rotate propeller until next blade is in same position as No. 1 blade was prior to rotation.

(3) When No. 2 blade does not touch point of indicator, measure distance from point to point nearest point of blade. When No. 2 blade is nearer the stand than No. 1 blade was, move indicator back until it just touches No. 2 blade.

(4) Rotate propeller again until No.1 blade is down and measure distance from pointer to blade. With pointer set to touch nearest blade, the distance to other blade or blades must not exceed maximum allowable in overhaul instructions manual for applicable propeller; otherwise, propeller must be removed for overhaul. When propeller track is within repairable limits, make correcting adjustments in accordance with applicable aircraft or propeller maintenance manual.

2-12. Propeller Installation. Propellers shall be installed using the applicable maintenance manual. Preparation for installation is explained by the following procedures:

a. Depreserve serviceable propellers received from stock following procedure outlined in applicable maintenance manual.

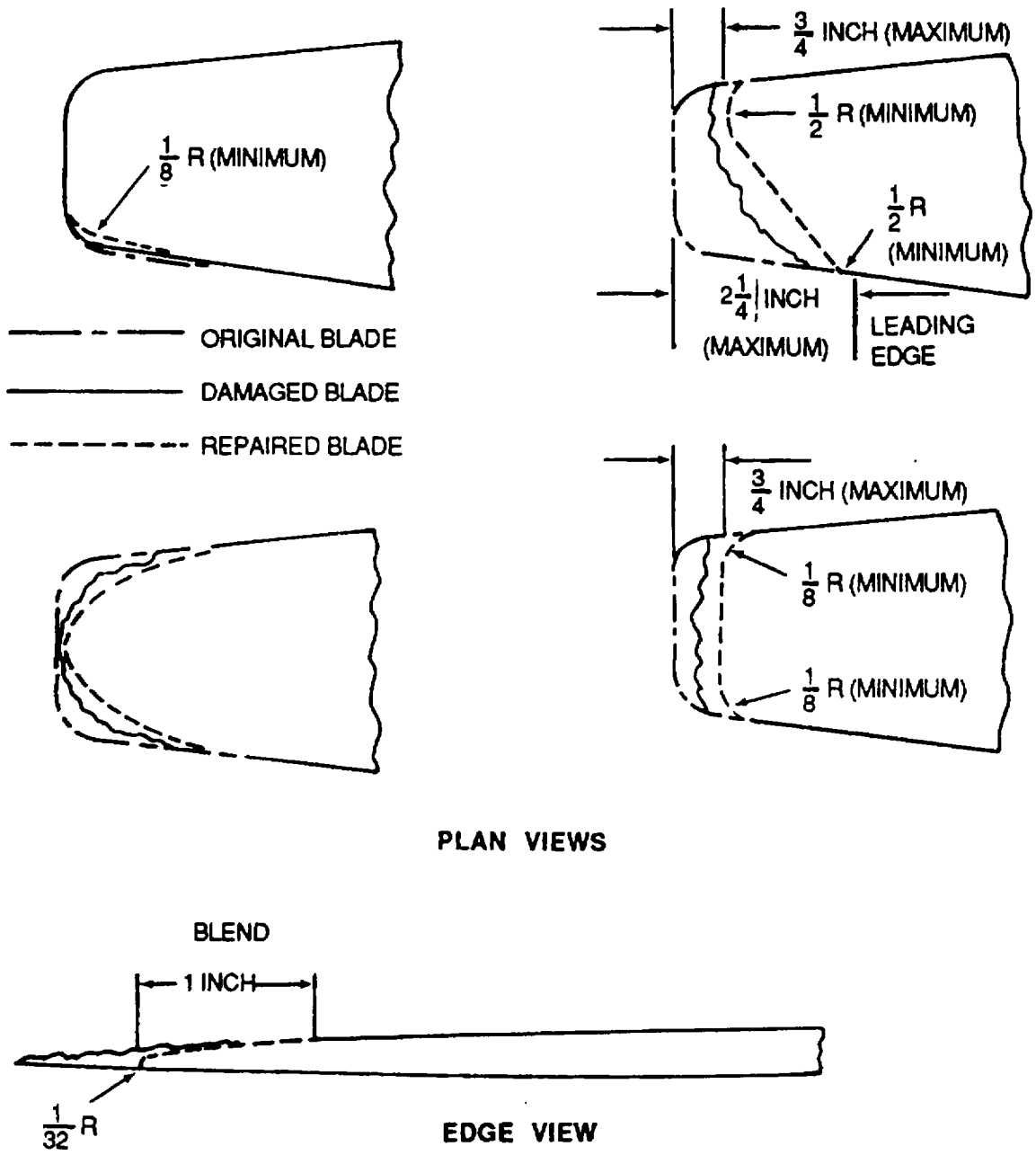

NOTE:
BLADE RADII AND TIP SHAPE SHOULD BE THE SAME FOR BOTH BLADES

Figure 2-5. Damaged Square Tip Repair

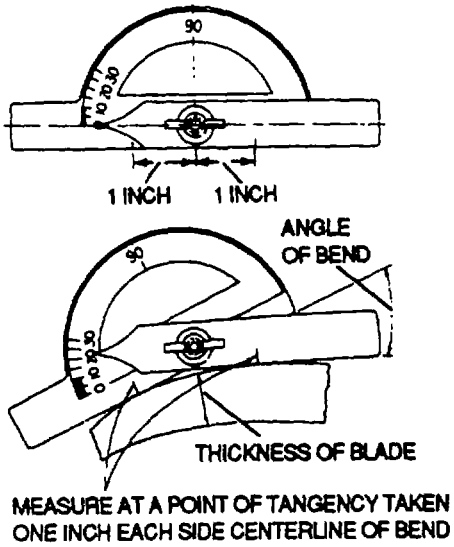

Figure 2-6. Measuring Angle of Bend

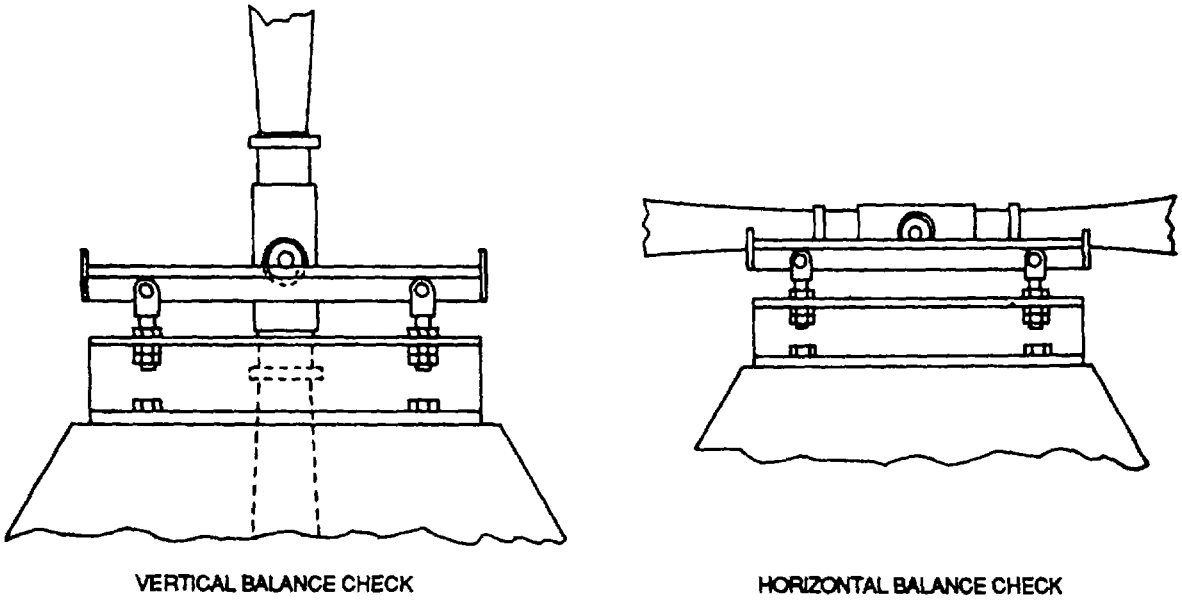

Figure 2-7. Two-Blade Balance Check

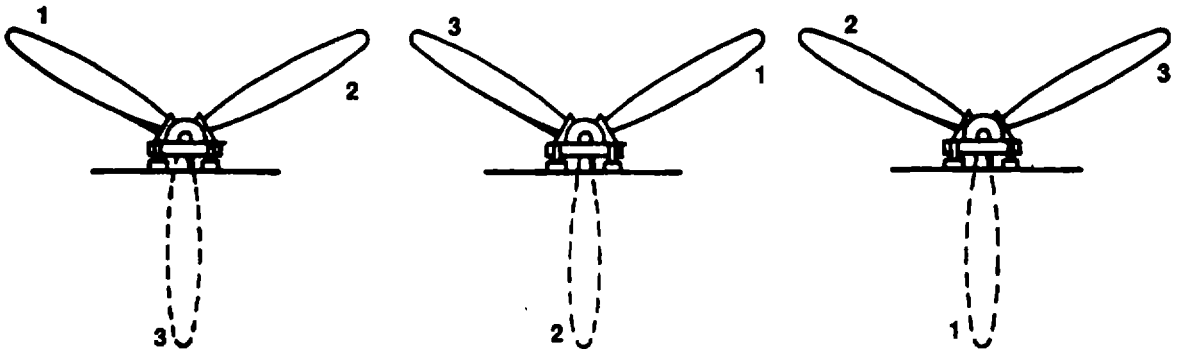

Figure 2-8. Three-Blade Balance Check

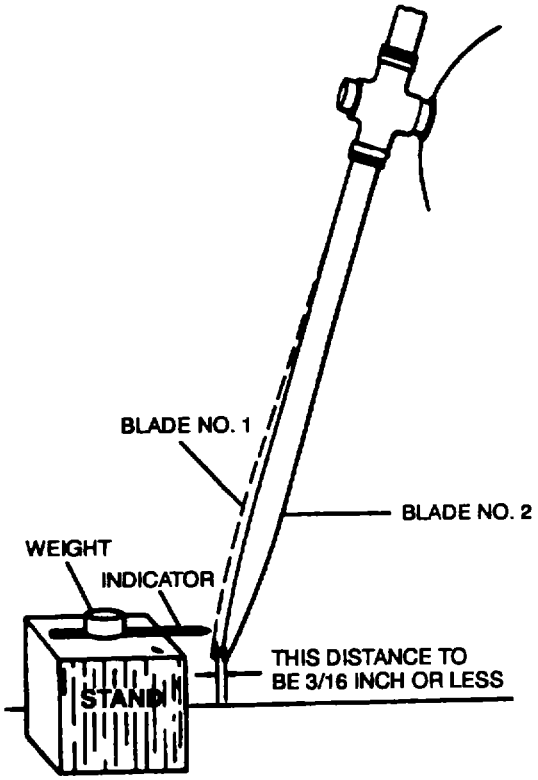

Figure 2-9. Propeller Tracking

b. Inspect propeller and parts visually for damage and, without disassembling units, ensure that all parts which are accessible fit properly.

WARNING

Drycleaning solvent is flammable and solvent vapors are toxic. Use P-D-680, Type II Solvent in a well-ventilated area. Keep away from open flames. Avoid prolonged solvent contact with skin.

c. Carefully stone down all galling or scoring on jointed surfaces or attaching parts, and all minor corrosion, raised edges, nicks, burrs, and cuts. After stoning or dressing propeller parts, remove any small metal particles with drycleaning solvent, Federal Specification P-D-680.

CAUTION

Do not clean propellers with aromatic fuels.

2-13. Propeller Governors. Principles of operation, model designation, single capacity governors, turbo prop governors, turbo prop overspeed governors, and integrated oil control units are described in the following paragraphs.

a. Principles of Operation. Constant-speed propellers are controlled by a speed governor which automatically adjusts propeller pitch to maintain a selected engine speed. If the rpm of the propeller tends to increase, the governor senses the increase and responds by causing the propeller blade angle to increase. Also, when the propeller rpm tends to decrease, the governor causes a decrease in propeller blade angle. An increased blade angle will cause a decrease of rpm, and a decreased blade angle will cause an increase of engine rpm.

b. Model Designation. There are two models of propeller governors. One type, the single-capacity governor, operates by applying oil pressure to or releasing oil pressure from a servo piston. The second model, called a double action governor, applies oil pressure to either side of a double action servo piston.

c. Single Capacity Governors. The single capacity governor is a single-acting, self-contained unit. It regulates engine speed by varying the pitch of the propeller. The single capacity governor only reduces blade pitch by producing an oil pressure increase against a servo piston. The governor works to counteract, as necessary, the increase in blade pitch which is accomplished by a combination of counterweights on the propeller blades and feathering springs in the servo piston.

d. Turbo Prop Overspeed Governors. The turbo prop governor and fuel control are connected and operate in coordination with each other. The power lever directs a signal from the cockpit to the fuel control for a specific amount of power from the engine. The fuel control and the propeller governor together establish the correct combination of rpm, fuel flow, and propeller blade angle to create sufficient propeller thrust to provide the desired power.

e. Turbo Prop Overspeed Governors. The speed governor acts as a safeguard against propeller overspeed in the event of constant speed governor failure. The unit in the governor which acts automatically to regulate engine speed is the speed-sensitive element. This unit is affected by centrifugal force and spring pressure. When engine speed is excessive, the centrifugal force on the speed-sensitive element overcomes spring pressure and the element moves the distributor valve to route hydraulic fluid under pressure to the pitch-change (torque) units at the base of the propeller blades.

f. Integrated Oil Control Assembly. The integral oil control assembly contains the oil supply for operating the propeller. This oil is independent of the engine oil system. The oil control assembly also contains a main pump which is driven by propeller rotation. The main pump delivers oil continuously to the propeller governor. For single-capacity governors, oil pressure is increased or decreased. For double-acting governors, the oil is directed to either the inboard or outboard side of the double-acting piston, to decrease or increase blade angle, respectively.

2-14. Rigging Governed Propellers. Oil control plugging, installation, rigging, and operational checks are described in the following paragraphs.

a. Oil Control Plugging. Many governors are designed so that they may be adapted for either single action or double-action operation. As a single-action governor, it directs oil pressure to the rear of the cylinder to decrease pitch and allows it to drain from the cylinder when centrifugal force increases pitch. Propellers having counterweights use single-action governors. The counterweights and centrifugal force act together to increase pitch. For those propellers which do not use counterweights to increase pitch, oil from the governor is used to increase pitch by overcoming the centrifugal

force of the blades. In this case, the plug B is removed and installed in passage C of the governor. This permits governor oil pressure to be directed to the rear of the cylinder, to decrease pitch. Oil pressure is directed to the forward side of the cylinder to increase pitch. See figure 2-10.

b. Installation. The following general procedures are for governor installation:

(1) Remove all portions of old gasket from mount base.

(2) Remove nicks and burrs on governor base and mounting pad with a fine stone, Federal Specification SS-S-736, prior to installation.

(3) Install a new gasket every time a governor is installed.

(4) Torque mount nuts in accordance with applicable aircraft maintenance manual.

(5) Retorque mount nuts after the first 15 minutes engine runup.

c. Rigging. The following general procedures are for rigging the propeller governor. Refer to the applicable maintenance manual for specific instructions.

NOTE

Engine operation shall be performed by authorized personnel only.

(1) Start engine.

(2) Perform engine run-up check With PROP lever in the full forward position, adjust power lever until propeller rpm stabilizes at high rpm.

(3) Next, retard PROP lever to the minimum rpm position.

NOTE

Adjust governor when rpm settings are not met as specified by the applicable maintenance manual.

d. Operation Checks. At the time of propeller governor, or engine installation, the following steps are normally taken to ensure that the power plant will obtain takeoff rpm:

(1) During ground runup, move the throttle to takeoff position and note the resultant rpm and manifold pressure.

(2) If the rpm obtained is higher or lower than the takeoff rpm prescribed in the instructions of the manufacturer, reset the adjustable stop, as shown in figure 2-11, on the governor until the prescribed rpm is obtained.

2-15. Propeller Icing. Ice formation on a propeller blade, in effect produces a distorted blade airfoil section which causes a loss in propeller efficiency. Generally, ice collects unsymmetrically on a propeller blade and produces propeller unbalance and destructive vibration. Icing types, anti-icing, and deicing are explained in the following paragraphs.

a. Icing Types. The types of icing are glaze or clear, rime, and glime or mixed. Each type is described in the following paragraphs.

(1) Glaze ice. Glaze (or clear) ice is hard, glossy, and heavy. This type of ice forms when, after initial impact, the remaining liquid portion of the raindrop flows out over the surface freezing as a smooth sheet of solid ice.

(2) Rime ice. Rime ice has an irregular shape and rough surface. It is brittle and frost-like and lighter than glaze ice. Rime ice forms when raindrops are small. The liquid portion remaining after initial impact freezes rapidly before the drop has time to spread. The small frozen droplets trap air between them giving the ice a white, frosty appearance.

(3) Glime ice. Glime (or mixed) ice is a mixture of glaze and rime ice. Glime ice is a hard, rough mixture which can form rapidly. Glime ice forms when raindrops vary in size or when liquid drops are mixed with snow or ice particles.

b. Anti-Icing. Propeller anti-icing is normally accomplished by spraying anti-icing fluid over the leading edge of the propeller. The fluid is pumped from the fluid tank through small tubes that open just outside the propeller hub as shown in figure 2-12. The centrifugal force of the spinning propeller spreads the fluid over the leading edge of the blades.

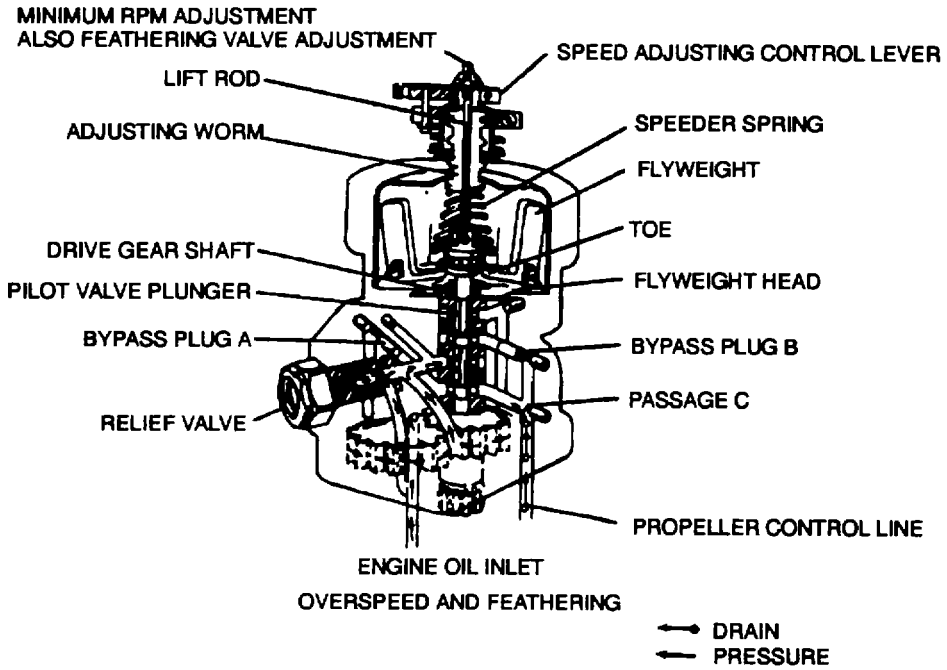

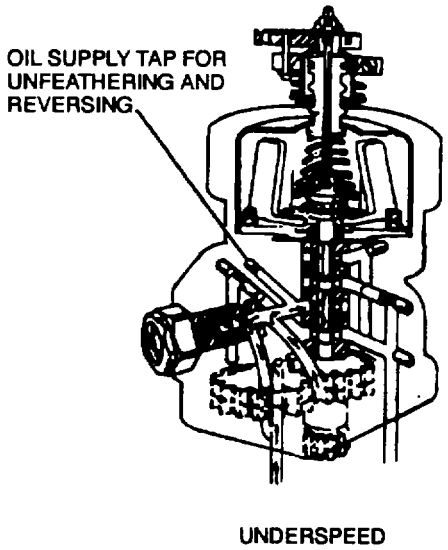

Figure 2-10. Woodward Governor

c. Deicing. An electrical propeller icing control system, as shown in figure 2-13, consists basically of an electrical energy source, a resistance heating element, system controls, and necessary wiring. The heating elements are mounted internally or externally on the propeller spinner and blades. Electrical power from the aircraft system is transferred to the propeller hub through electrical leads which terminate in slip rings and brushes. Flexible connectors are used to transfer power from the hub to the blade elements. Ice removal is accomplished by converting electrical energy to heat energy in the heating element.

2-16. Propeller Preservation and Storage. Metal Propellers. Preservation and storage of propeller hub and dome assembly and blades is described in the following paragraphs.

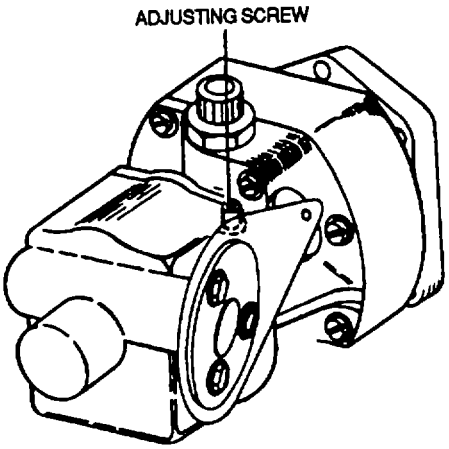

Figure 2-11. Propeller RPM Adjusting Screw

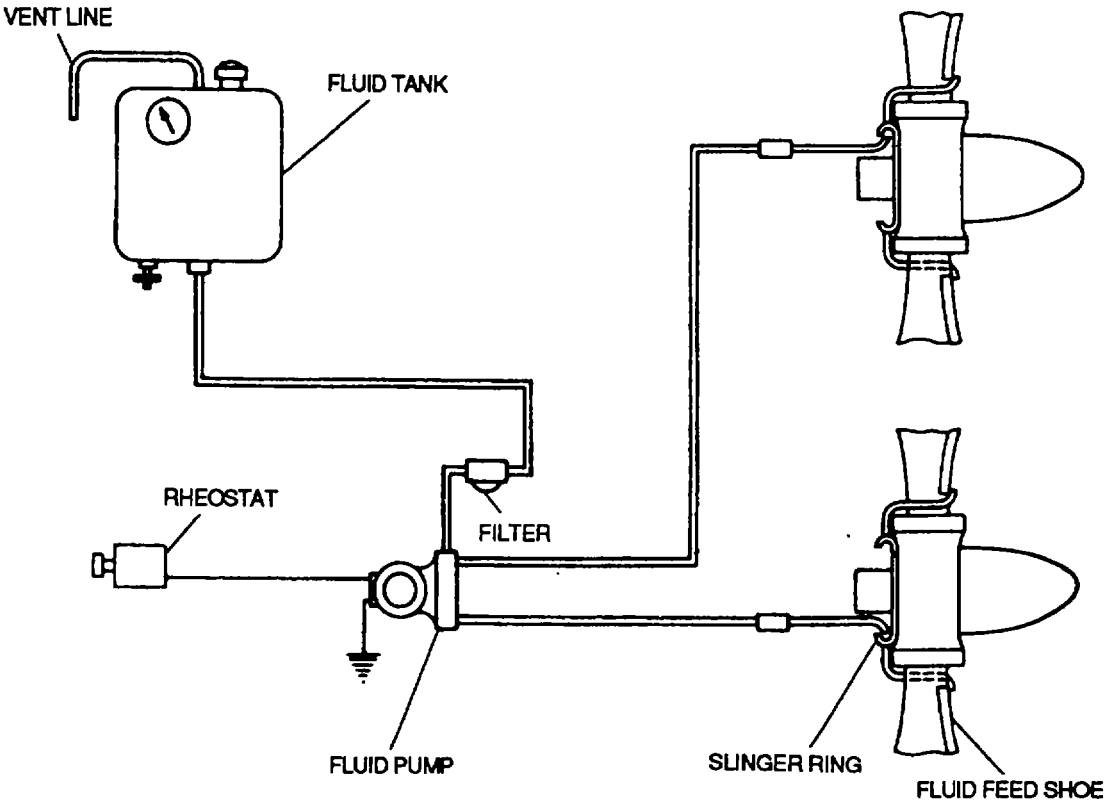

Figure 2-12. Typical Anti-Icing System

a. Propeller hub and dome assembly. The propeller hub and dome assembly of propellers provided with internal oil controls requires no preservation other than that received during engine run when engine is being preserved. When removing a propeller at a time other than engine preservation, internal portions of hub and dome will be coated with a mixture consisting of 25 percent corrosion preventive, MIL-C6529, type II, and 75 percent engine lubricating oil, MIL-L-6082, grade 1100. Excess oil will be drained from hub and dome, and all openings sealed with greaseproof barrier material, MIL-B-121.

b. Propeller blades. Prepare metal propeller blades for storage by coating all surfaces except rubber parts with a soft film compound such as MIL-C-16173, grade II. Blades shall then be wrapped in waterproof barrier material, MIL-B-131, Class 2. A suitable wooden container that provides sufficient protection from handling and for securing blades in a fixed position shall be used to contain blades.

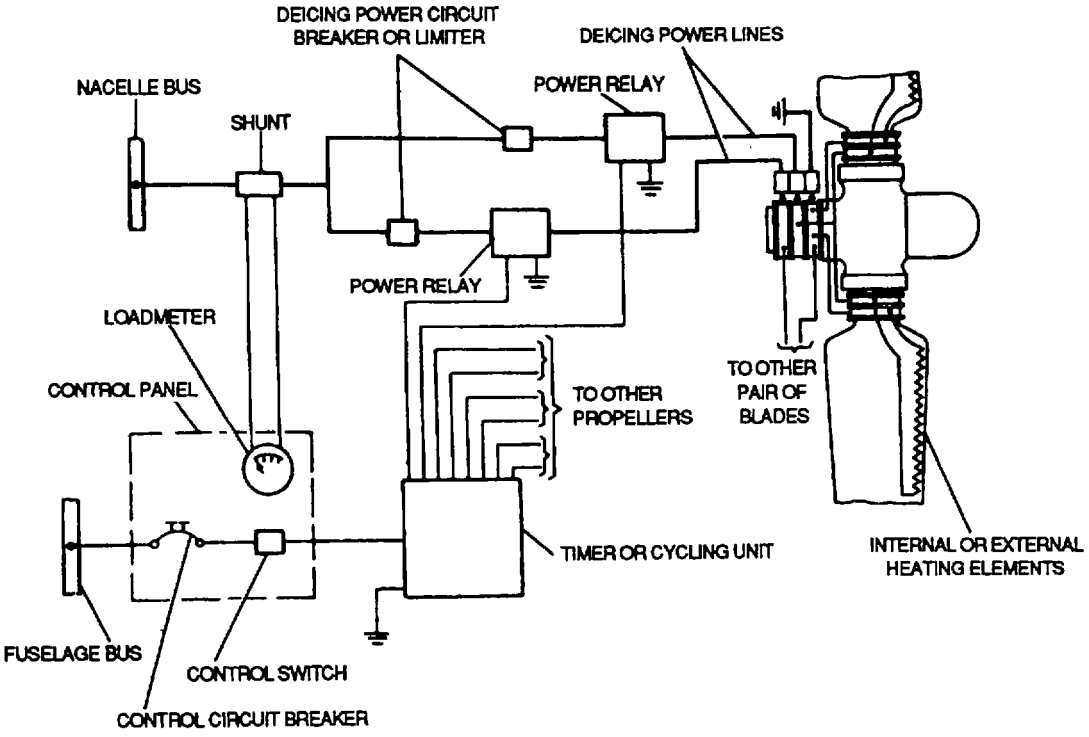

Figure 2-13. Typical Electrical Deicing System

CHAPTER 3

ROTOR MAINTENANCE PRACTICES AND PROCEDURES

3-1. General. The rotor maintenance practices and procedures discussed in this chapter are representative of those in widespread use. No attempt has been made to include detailed maintenance procedures for a specific helicopter rotor. Refer to the applicable maintenance manual for specific maintenance procedures.

3-2. General Shop Rules The practices and procedures described in this chapter pertain to the repair functions of aviation activities and are applicable to all levels of maintenance. Because of the many types of Army aircraft, each shop within the manufacturing and repair section must, of necessity, have personnel trained in general practices and procedures to the extent that different type and model aircraft do not upset a smooth running shop.

a. Responsibility. All supervisory personnel in the manufacturing section are responsible for a continuing and effective shop safety program. To implement and maintain this program, shop supervisors shall utilize bulletin boards, signs, and any other effective method. Shop personnel shall cooperate in the shop safety program by making helpful recommendations, and continually exercising care and caution in the operation of all shop equipment. All shop personnel shall strive to improve the safety program and be especially alert to observe and correct hazardous conditions and unsafe shop practices. All accidents, no matter how minor, shall be reported to the shop supervisor, and all published instructions regarding safety shall be strictly adhered to. Also, safety engineers and safety officers shall ensure that proper safety procedures are adhered to in accordance with AR 385-10, Army Safety Program; AR 385-30, Safety Color Code Markings and Signs; AR 385-32, Protective Clothing and Equipment; The Occupational Safety and Health Act of 1971, OSHA 1910.251; all applicable fire codes, NFPA 410; and other accepted civilian and military safety practices.

b. Shop Housekeeping. Housekeeping is the yardstick by which the shops in the manufacturing section are judged. A clean, well arranged shop is a safe shop and reflects credit on all personnel concerned with its operation. The following shop practices shall be observed:

(1) Oil pans or drip pans shall be used where leaking oil, grease, and similar materials may cause hazardous accumulations on equipment or floors. All spills shall be cleaned up immediately. Approved sweeping compound may be used to remove these materials from the floor.

CAUTION

Floors shall not be cleaned with volatile or flammable liquids. A flammable film may remain and cause a fire hazard.

(2) Floors shall be maintained smooth and clean, free of all obstructions and slippery substances. Holes and irregularities in floors shall be repaired to maintain a level surface free from tripping hazards.

(3) All unnecessary materials on walls shall be removed and projections shall be kept to a minimum.

(4) Aisles shall be clearly defined and kept free of hazardous obstructions. Where possible, aisles shall be suitably marked by painting.

(5) All machines, work benches, aisles, etc., shall be adequately illuminated.

c. Shop Safety. Unsafe equipment and fire hazards are the main factors to be observed while planning safety procedures.

(1) Equipment safety. Unsafe equipment shall be reported immediately. The following equipment safety practices shall be observed:

(a) Machines shall be located to provide operators with sufficient space to handle materials and perform job operations without interference.

(b) Bolt down all machinery that can move or walk due to vibration (drill press, bench grinder, etc.).

(c) Substantial low resistance conductors shall be used to ground all stationary and portable machines, equipment, or other devices in which static charges may be generated, or which require electrical circuits of a hazardous nature.

(d) Shop machinery shall be operated only by qualified personnel observing safe practices.

(e) Safety devices, such as guards, interlocks, automatic releases, and stops, shall always be kept in operating condition.

(f) Ensure that all unauthorized personnel are clear of area before opening valves or energizing electrical circuits for starting machinery.

(g) Suitable mechanical guards, such as enclosures or barricades, shall be permanently installed on all machinery not already equipped with such to eliminate danger of injury from moving parts.

(h) Machinery shall not be adjusted, repaired, oiled, or cleaned while machine is in operation or power is on.

(i) Personnel operating machinery shall wear protective clothing as prescribed. A protective face shield or goggles shall be worn when operating a grinder regardless of whether grinder is equipped with attached shields.

(j) Jewelry shall not be worn while performing any maintenance.

(2) Fire safety. A constant vigilance shall be maintained to seek out fire hazards. Fire hazards are constantly present in the shop where sparks, friction, or careless handling can cause an explosion that may destroy equipment or buildings, and injure or kill personnel. Refer to AR 385-10, The Army Safety Program and the Occupational Safety and Health Act of 1971. The following fire safety practices shall be observed:

(a) NO SMOKING signs shall be placed in areas where smoking could create a fire hazard.

(b) Personnel shall be trained in the use, knowledge, and location of shop fire fighting equipment.

(c) Each shop shall be equipped with fire extinguishers suited for type of fire most likely to occur.

(d) Use correct fire extinguisher for class of fire as follows:

- Class A fire (wood, paper, trash, etc) Use water or soda-acid fire extinquisher
- Class B fire (oil, paint, fuel, grease, etc.). Use bromotrifluoromethane or carbon dioxide fire extinguisher.
- Class C fire (electrical equipment). Use bromotrifluoromethane or carbon dioxide fire extinguisher.
- Class D fire (combustible metals-magnesium, titanium, zirconium, sodium, lithium, and potassium). Use dry powder type fire extinguisher.

(e) Oily waste, rags, and similar combustible materials shall be discarded in self-closing metal containers which shall be emptied daily.

(f) Flammable materials shall not be stored in the shop.

(g) Use only approved cleaning solvents.

d. Shop Tools and Materials. Handling tools and materials require observance of the following common safety practices:

(1) Do not leave tools or objects in elevated positions from which they can fall or be knocked off.

(2) Do not point a compressed airstream toward any part of the body.

(3) All unserviceable tools shall be plainly marked and removed from service.

(4) Electrical cables and air hoses to portable units shall be laid out so there is no danger of tripping.

(5) Electrical tools shall be connected to a low resistance ground.

(6) Keep bench tops covered with material hard enough to prevent chips and other foreign material from becoming imbedded. Keep bench tops clean and free from chips and filings.

(7) Keep vise jaws covered with soft metal jaw caps.

3-3 Principles of Operation and Design Features of Rotor Systems. The amount of lift available to a rotor system is determined by many factors. The pilot has control of the pitch angle of the rotor blades and the power delivered to the rotor, represented by the rpm. By controlling the pitch angle of the rotor blades the pilot can establish the vertical flight of the helicopter. By manipulating the engine rpm control, a constant engine speed can be maintained regardless of the increase or decrease in blade pitch. The engine rpm control is synchronized with the main–rotor pitch control in such a manner that an increase of pitch increases power and a decrease of pitch decreases power. A complete control system of a conventional helicopter is shown in figure 3-1.

3-4 Helicopter Configurations. There are various helicopter configurations. The single rotor and tandem rotor configurations are explained in the following paragraphs.

a. *Single Rotor.* The single rotor configuration, as shown in figure 3-2, uses one main rotor and a tail rotor for torque control. The single rotor configuration is the most common configuration used by Army helicopters.

b. *Tandem Rotor.* The tandem rotor configuration, as shown in figure 3-3, uses two main rotors which rotate in opposite directions to counteract torque effects. This configuration is common for large helicopters with special mission capability.

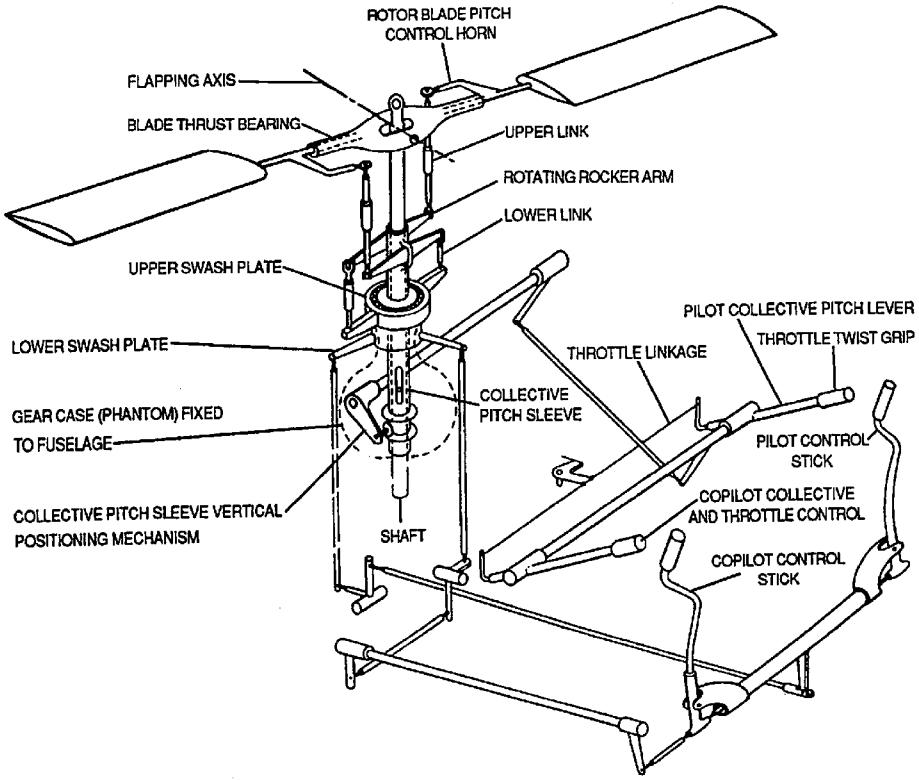

Figure 3-1. Helicopter Control System.

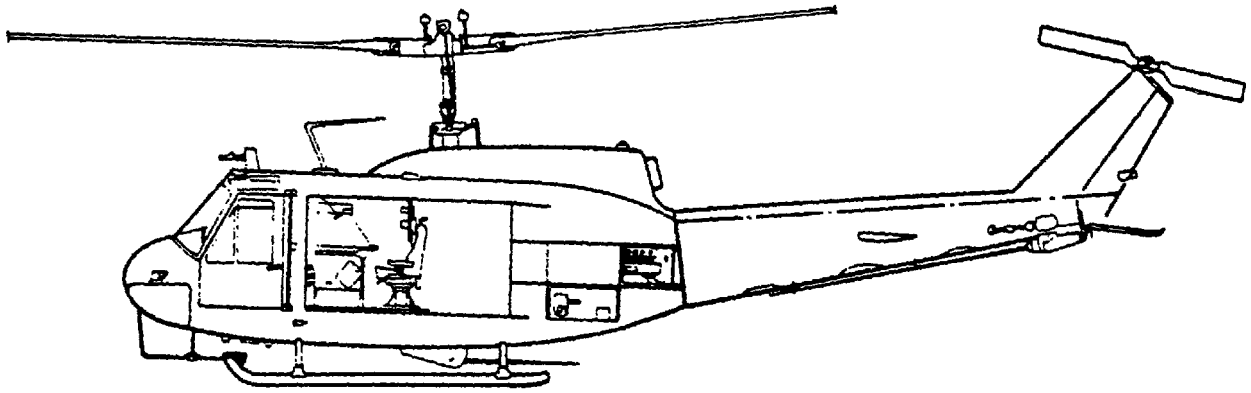

Figure 3-2. Single Rotor Configuration.

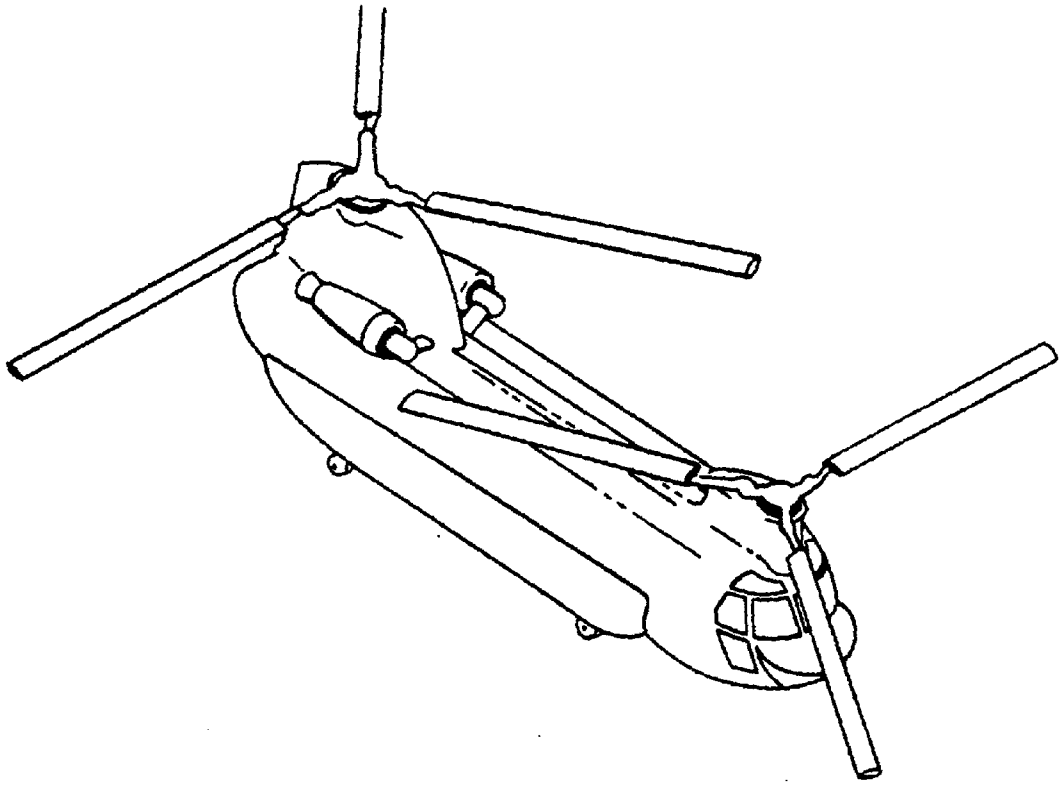

Figure 3-3. Tandem Rotor Configuration.

3-4.1 Power Train System. A typical single–rotor power train system (Figure 3-3.A) consists of a main transmission (main gearbox), a main drive shaft, and a series of tailrotor drive shafts with two gearboxes. The main transmission includes input drive with freewheeling provisions if no clutch assembly is required, output drive, and main rotor mast. The main drive shaft between the engine and main transmission drives the main transmission. A series of tail rotor drive shafts with two gearboxes (transmissions) – intermediate and tail rotor – between the main transmission and tail rotor drive the tail rotor.

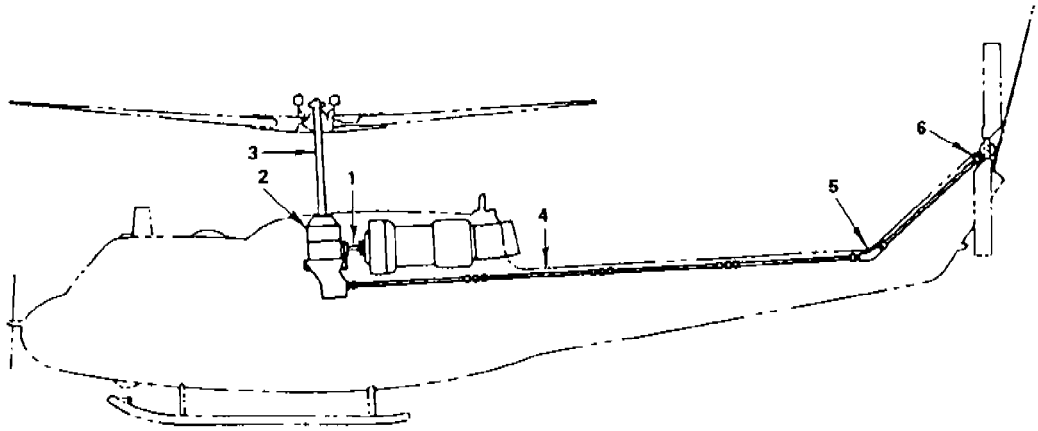

1. Main Drive Transmission
2. Main Transmission
3. Mast
4. Tail Rotor Drive Shafts
5. Intermediate Gearbox
6. Tail Rotor Gearbox

Figure 3-3.A. Typical Single–Rotor Power Train System.

a. *Main Drive Shaft.* The main drive shaft (Figure 3-3.B) transmits torque from the engine to the main transmission. The shaft is a hollow, statically balanced tube. In addition to required fittings, bolts, nuts, and washers are provided with flexible splined or rubber couplings for installation between the engine and transmission. On systems using a clutch assembly, the main shaft is attached to the clutch on one end and to the transmission input drive on the other end. The clutch assembly provides freewheeling (Figure 3-3.C). On systems not requiring a clutch assembly, the shaft is attached to an adapter on the engine output shaft on one end and to the freewheel coupling of the transmission input drive assembly on the other end.

(1) Clutch Assembly. The clutch assembly allows for a smooth engagement of the engine to the power train system. The clutch is used to stop possible blade damage and shaft shearing due to sudden torque loading. Some clutches are designed to let the engine start and run without the rotor turning. This is very useful for warm–up and maintenance procedures. Due to the free power system in all gas turbine engines used by the Army, a clutch assembly is not needed on aircraft with gas turbine engines.

The centrifugal clutch assembly is used only with engines of low horsepower output. When the engine speed is increased, centrifugal force throws the clutch shoe against the inner surface of a drum, completing the drive to the rotor. This type of clutch, because of its slippage at low and medium speeds, generates heat, which is harmful to the life of clutch parts.

(2) Freewheeling Unit. All rotary–wing aircraft have a freewheel unit located between the engine and the main rotor or rotors. Three basic types of freewheel units are roller, sprag clutch, and overrunning clutch. The purpose of the freewheel unit is to free the power train drive system from the drag made by the dead or idling engine. By doing this the freewheel unit makes autorotation possible. This allows an aircraft to land safely without engine power. All types of freewheel units generally work

in the same manner. They provide a positive lock of the power train drive system to the engine at any time engine speed equals rotor speed. When rotor speed is faster than engine speed, the freewheel unit unlocks the power train drive system from the engine.

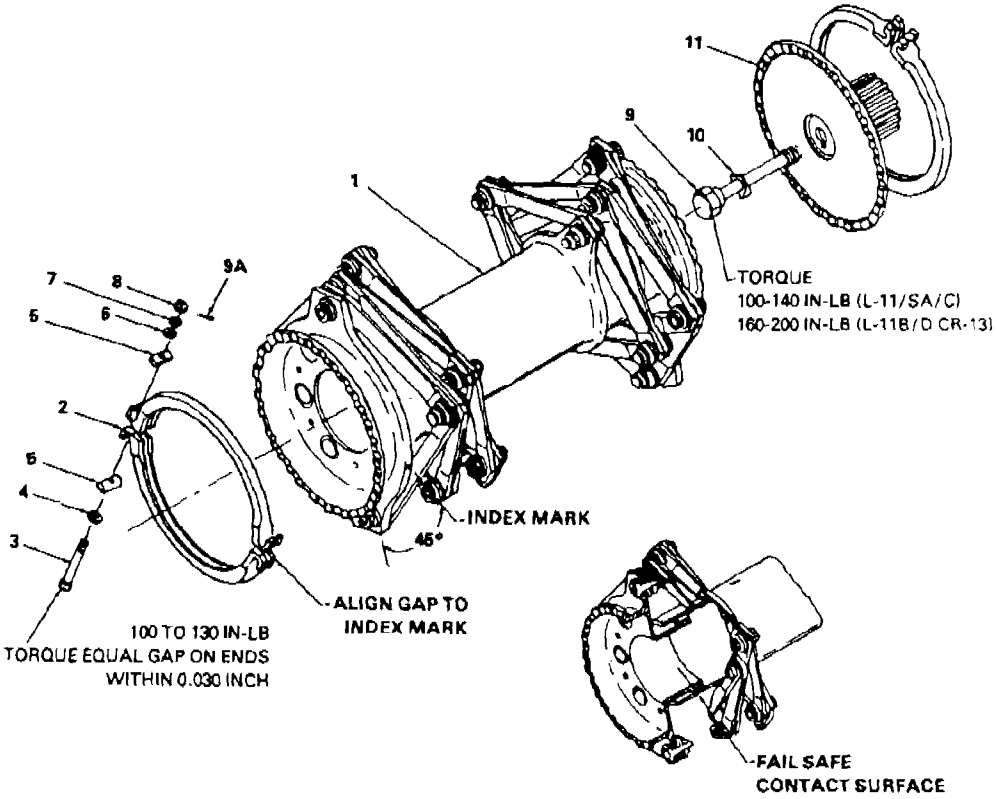

1. Main Drive Shaft Assembly
2. Coupling Clampset
3. Clamp Bolt
4. Chamfer Washer
5. Pivots
6. Steel Washer
7. Steel Washer (if required)
8. Nut
9. Retaining Bolt
9A. Cotter Pin
10. Key Washer
11. Adapter

Figure 3-3.B. UH–1 Main Drive Shaft, SKCP2281.

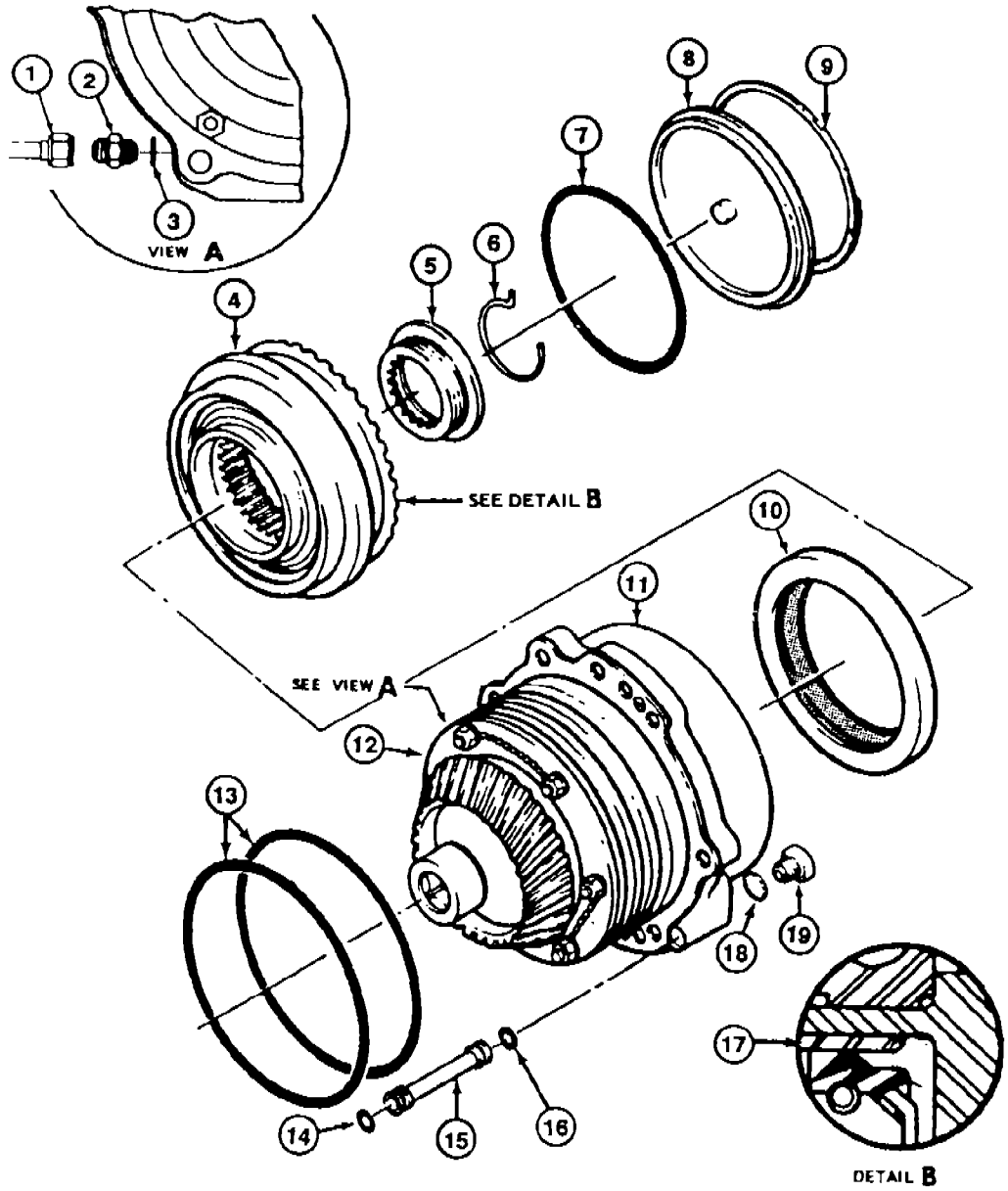

1. Tube Assembly
2. Union
3. Packing
4. Clutch Assembly
5. Nut
6. Locking Spring
7. Packing
8. Grease Retainer
9. Retaining Ring
10. Seal
11. Sleeve Assembly
12. Pinion Gear
13. Packing
14. Packing
15. Drain Tube
16. Packing
17. Wear Sleeve
18. Packing
19. Plug

Figure 3-3.C. Centrifugal Clutch Assembly.

b. Main Transmission. A typical main transmission performs a number of functions (Figure 3-3.D). It

- Drives the main rotor mast assembly.
- Changes the angle of drive from the engine to the main motor assembly.
- Provides RPM reduction through a train of spiral bevel gears and planetary gears.
- Provides a means of driving the tail rotor and the transmission accessories.
- Supports the main rotor assembly.

The main transmission is mounted in a variety of ways according to a particular manufacturer's design. Some transmissions contain a support case. The case is an integral part of the transmission mounted directly to the transmission deck. The transmission may be secured to the transmission deck by a system of tubular support assemblies. In one power train system, the transmission is secured to the main rotor mast support structure. In the power train system of a reciprocating–engine–powered, observation–type helicopter where neither shafting from engine to transmission nor drive angle change is necessary, the main transmission is mounted directly on the engine.

(1) Input Drive. Engine torque is transmitted through the main drive shaft to the input drive, which drives the main transmission gear trains. On systems not using a clutch assembly, a freewheel coupling is provided in the input drive assembly, which automatically engages to allow the engine to drive the rotor or disengages the idling engine during autorotational descent. On dual–engine, single–rotor power train systems, the transmission has two input drive assemblies.

(2) Tail Rotor Drive. The tail rotor is mounted on the end of the main transmission and is driven by the accessory gear train. A flexible splined coupling provides a means of attaching the tail rotor drive shaft.

(3) Generator Drive. The generator drive is driven by the main transmission accessory gear train. The generator is driven off the main transmission so that, when the helicopter goes into autorotation and the engine is idling or stopped, enough electrical power will be left to operate instruments, radio, and electrical fuel pumps.

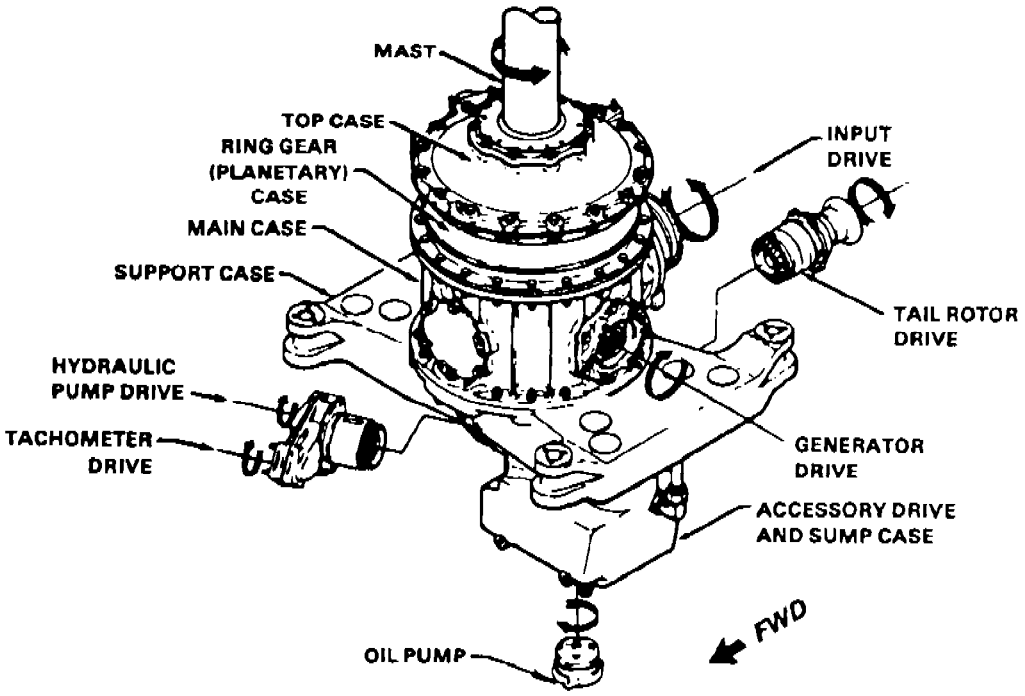

Figure 3-3.D. Typical Main Transmission.

(4) Main Transmission Oil System. Most main transmissions are lubricated by a wet sump oil system which is separate from the engine oil system (Figure 3-3.E). However, the engine oil cooler and transmission oil cooler may be mounted close together so that they can use the same blower system to cool the oil. Oil supply from the transmission sump is circulated under pressure from a gear–driven pump through internal passages and a filter to the sump outlet. From this outlet external lines are routed to an oil cooler with a separate thermal bypass valve, then to a manifold on the transmission main case. This manifold is equipped with a relief valve to regulate system pressure and distribute oil through jets and internal passages. This lubricates bearings and gears inside the transmission where the oil drains back to the sump.

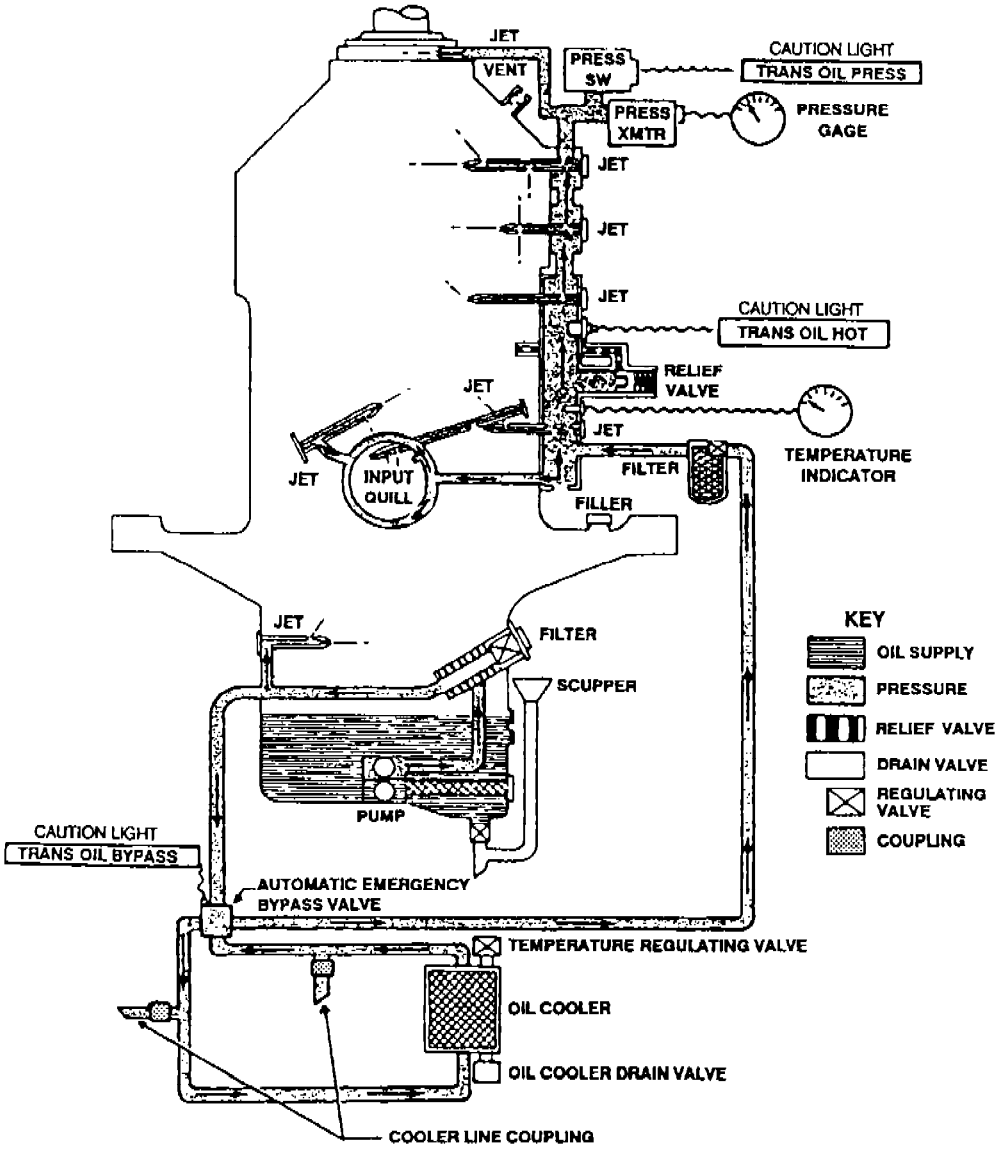

Figure 3-3.E. Typical Main Transmission Oil System.

Oil temperature and pressure gage readings are shown by a thermobulb and a pressure transmitter. Most transmission oil systems provide a heat switch and a pressure switch which will light caution lights on panels lettered XMSN OIL HOT and XMSN OIL PRESS (low pressure) if such conditions occur. Servicing and draining provisions are provided in the transmission oil system. Oil level sight gages are provided on most transmissions; others use the dipstick method. Chip detectors used in the transmission oil system are similar to those used on engines.

(5) Rotor Tachometer–Generator Drive. The rotor tachometer RPM indications are provided by the rotor tachometer–generator. The tachometer–generator drive is driven by the main transmission accessory gear train.

(6) Hydraulic Pump Drive. The hydraulic pump drive is driven by the main transmission accessory gear train. The hydraulic pump provides hydraulic pressure for the flight control servo system. Some helicopters use two separate flight control servo systems completely independent of each other. One system is the primary servo system; it gets hydraulic operating pressure from a hydraulic pump driven by the main transmission. A secondary servo system gets hydraulic operating pressure from a hydraulic pump driven by the engine.

c. *Main Rotor Mast Assembly.* The main rotor mast assembly is a tubular steel shaft fitted with two bearings which support it vertically in the transmission (Figure 3-3.F). Mast driving splines engage with transmission upper–stage planetary gear, providing counterclockwise rotation (viewed from above). The upper bearing retainer plate has an oil jet fed by an external oil hose. Splines on the upper portion of the mast provide mounting for main rotor and control assemblies.

d. *Tail Rotor Drive Shaft.* The purpose of the tail rotor drive shaft is to transmit torque from the main transmission to the tail rotor gearbox (Figure 3-3.G). The shaft is made up of a series of hollow tubes with provisions for statically balancing and coupling attachments on each end. Flexibility in the shaft is provided by splined or rubber couplings. The tail rotor drive shaft is supported by a series of support bearings and support hanger assemblies.

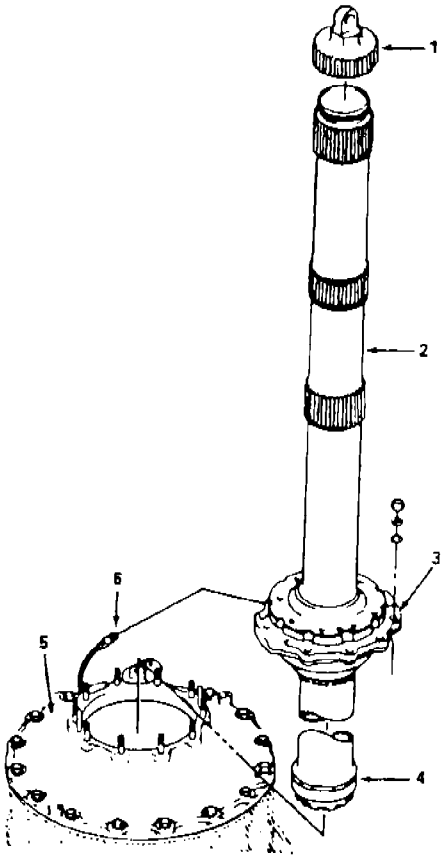

1. Mast Nut
2. Mast
3. Upper Bearing Assembly
4. Lower Bearing Race
5. Transmission
6. Oil Hose for Oil Jet

Figure 3-3.F. Typical Main Rotor Mast Assembly.

e. *Intermediate Gearbox.* An intermediate gearbox is located on the tail boom of the helicopter (Figure 3-3.H). This gearbox provides a specific degree change in direction of the tail rotor drive shaft with no speed change. The gearbox assembly consists of a case with flexible coupling provisions for attaching onto the tail rotor shaft fore and aft. The gearbox is splash–lubricated, and the case is fitted with an oil filter cap, a vent breather, an oil level sight gage, and a drain plug equipped with a magnetic insert. The magnetic insert collects metal particles coming from inside the gearbox. When there is a requirement, the metal particles can be collected and analyzed to determine the condition of the gears and bearings in the gearbox.

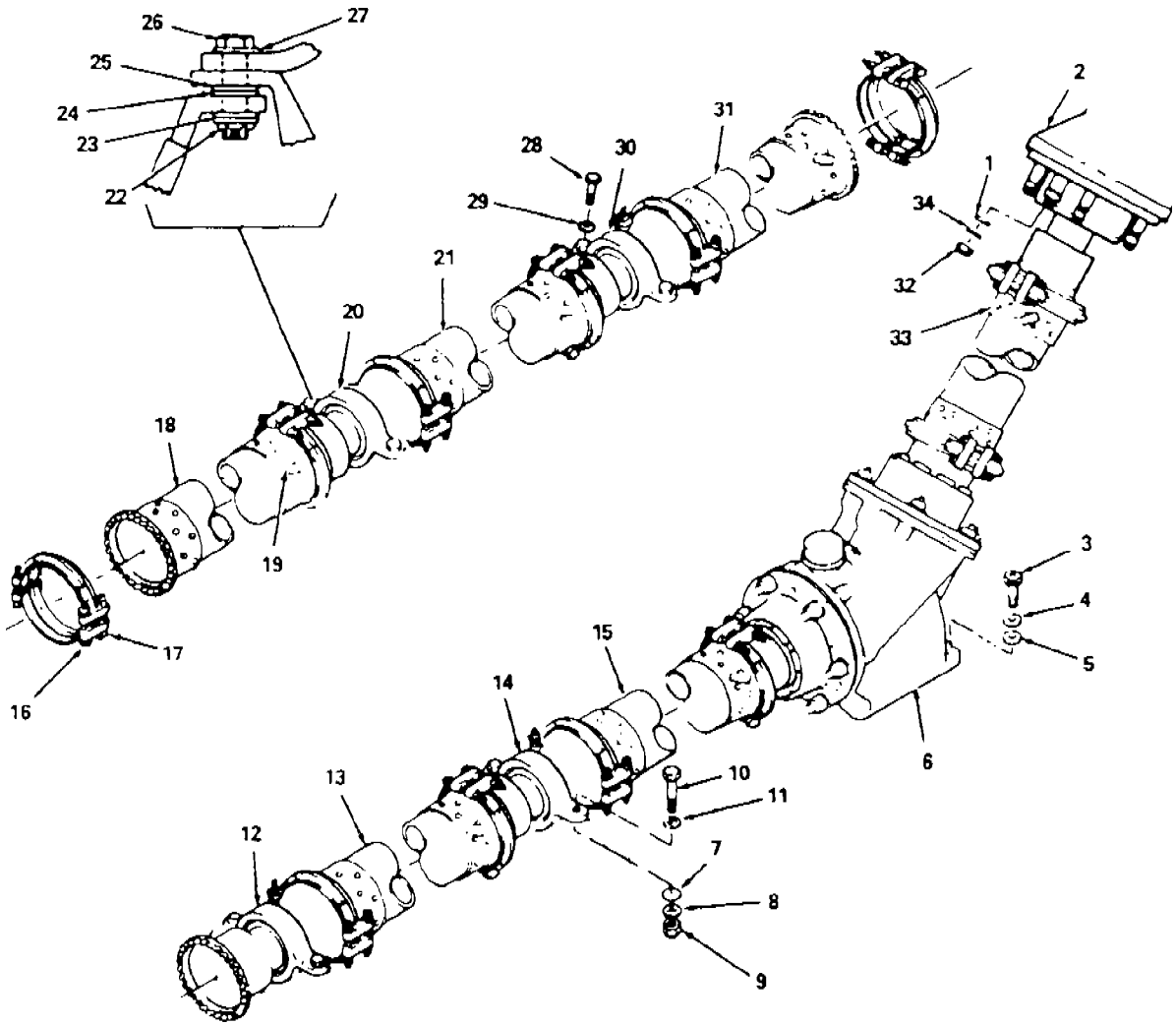

1.	Washer	13.	Shaft	25.	Flat Washer
2.	Tail Rotor Gearbox	14.	Hanger	26.	Bolt
3.	Bolt	15.	Shaft	27.	Flat Washer
4.	Flat Washer	16.	Nut and Bolt	28.	Bolt
5.	Flat Washer	17.	Clamp (12)	29.	Flat Washer
6.	Intermediate Gearbox	18.	Shaft	30.	Hanger
7.	Flat Washer	19.	ID Plate (6)	31.	Shaft
8.	Flat Washer	20.	Forward Hanger	32.	Nut
9.	Nut	21.	Shaft	33.	Shaft
10.	Bolt	22.	Nut	34.	Flat Washer
11.	Flat Washer	23.	Flat Washer		
12.	Hanger	24.	Flat Washer		

Figure 3-3.G. UH–1 Tail Rotor Drive Shaft.

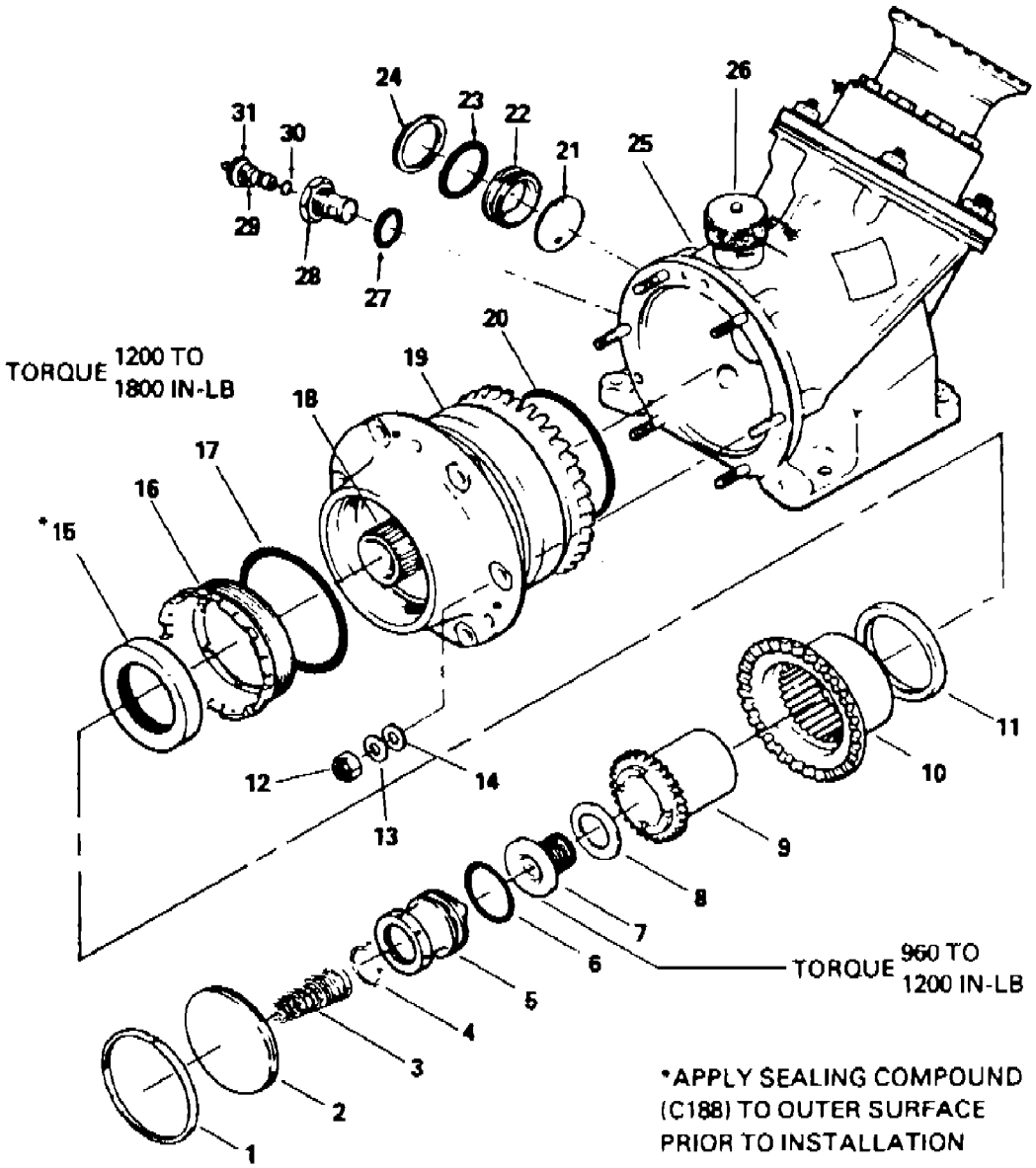

1.	Retaining Ring	12.	Nut	23.	Preformed Packing
2.	Plate	13.	Washer, Steel	24.	Retaining Ring
3.	Centering Spring	14.	Washer, Aluminum	25.	Case Assembly
4.	Lock Spring	15.	Seal	26.	Cap Assembly
5.	Retainer	16.	Retainer Nut	27.	Vent Cap
6.	Packing	17.	Packing	28.	Gasket
7.	Retainer Bolt	18.	Pinion Shaft	29.	Self–closing Value
8.	Washer	19.	Sleeve	30.	Packings
9.	Inner Coupling	20.	Packing	31.	Magnetic Chip Detector
10.	Outer Coupling	21.	Sight Indicator		
11.	Seal	22.	Glass		

Figure 3-3.H. Intermediate Gearbox (42)(UH–1).

f. *Tail Rotor Gearbox.* The tail rotor gearbox is located on the extreme aft end of the tail boom–in some cases on top of the tailboom vertical fin (Figure(3-3.I). The gearbox is splashlubricated. It consists of mating input and output gear assemblies set into a case provided with a vented oil filler cap, oil level sight gage, and a drain plug with a magnetic insert plug for collecting metal particles. By analyzing these metal particles, the condition of the gearbox gears and bearings can be determined. Flexible couplings are provided for attaching the tail rotor drive shaft onto the input end of the gearbox. The tail rotor gearbox provides a specific degree change in tail rotor drive shaft direction and a specific speed reduction between input shaft and output shaft on which the tail rotor assembly is mounted.

CAUTION

When troubleshooting or working on a specific single–rotor power train system or component, always refer to the applicable maintenance manual.

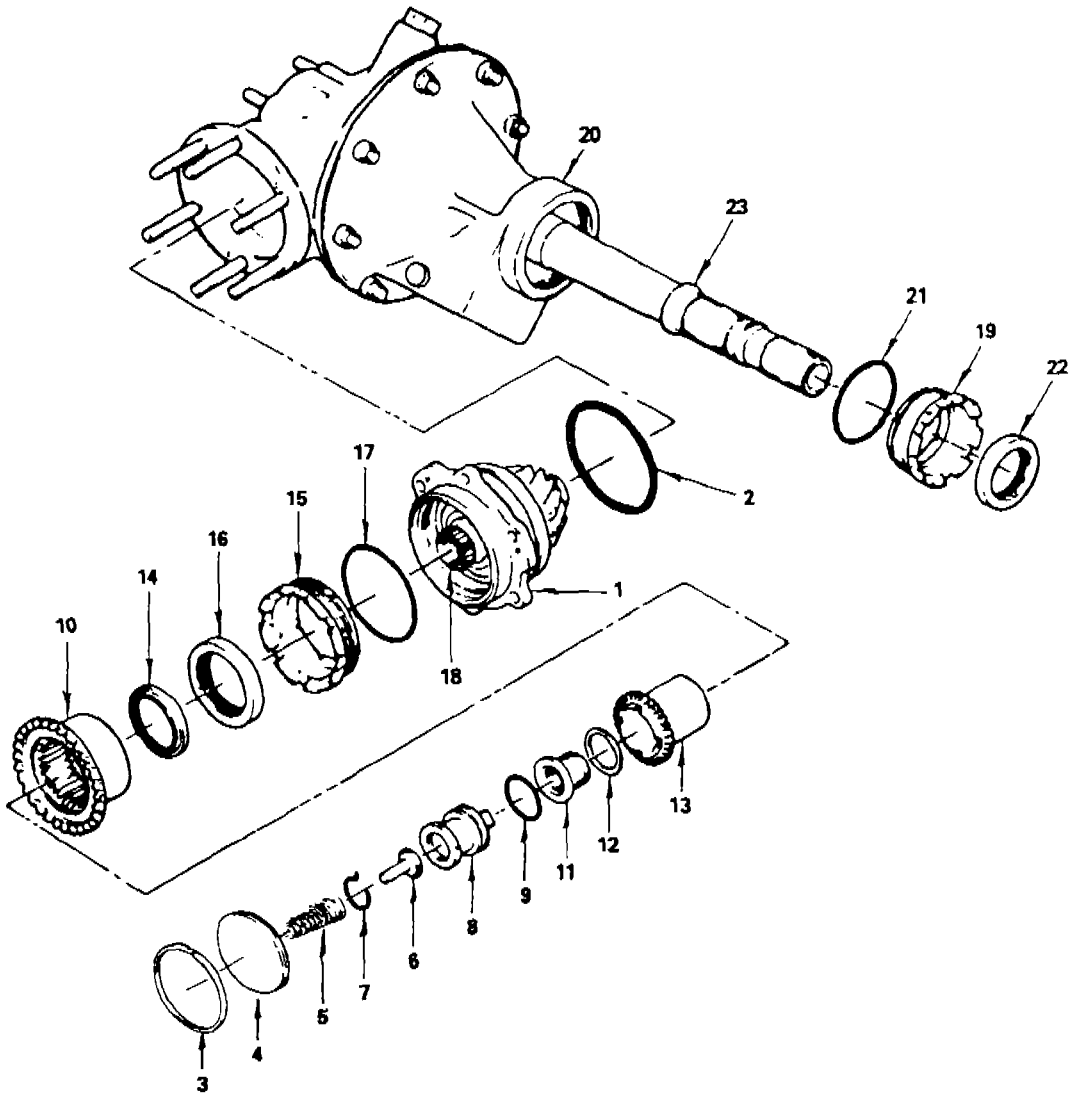

1.	Sleeve	9.	O–Ring	17.	O–Ring
2.	O–Ring	10.	Outer Coupling	18.	Shaft
3.	Retainer Ring	11.	Retainig Bolt	19.	Retaining Nut
4.	Seal Plate	12.	Washer	20.	Sleeve
5.	Centering Spring	13.	Inner Coupling	21.	O–Ring
6.	Spacer	14.	Seal	22.	Seat Seal
7.	Lock Spring	15.	Retaining Nut	23.	Shaft
8.	Retainer Plug	16.	Seal		

Figure 3-3.I. Tail Rotor Gearbox (90)(UH–1).

g. *Engine Transmission.* The two engine transmissions are identical assemblies. Minor rearrangement of transmission external parts provides interchangeability between right– and left–hand engine transmission installations. The transmissions are mounted directly on the engine being driven by the engine output shaft. The transmissions provide angle of drive and RPM reduction in torque. Torque from the engine is transmitted by the engine transmission and engine drive shaft assembly to the engine–combining transmission. Freewheeling is provided in the output shaft of the engine transmissions. This permits the drive system to overrun the engine during failure, a sudden reduction of RPM, or autorotation. (See Figure 3-3.J).

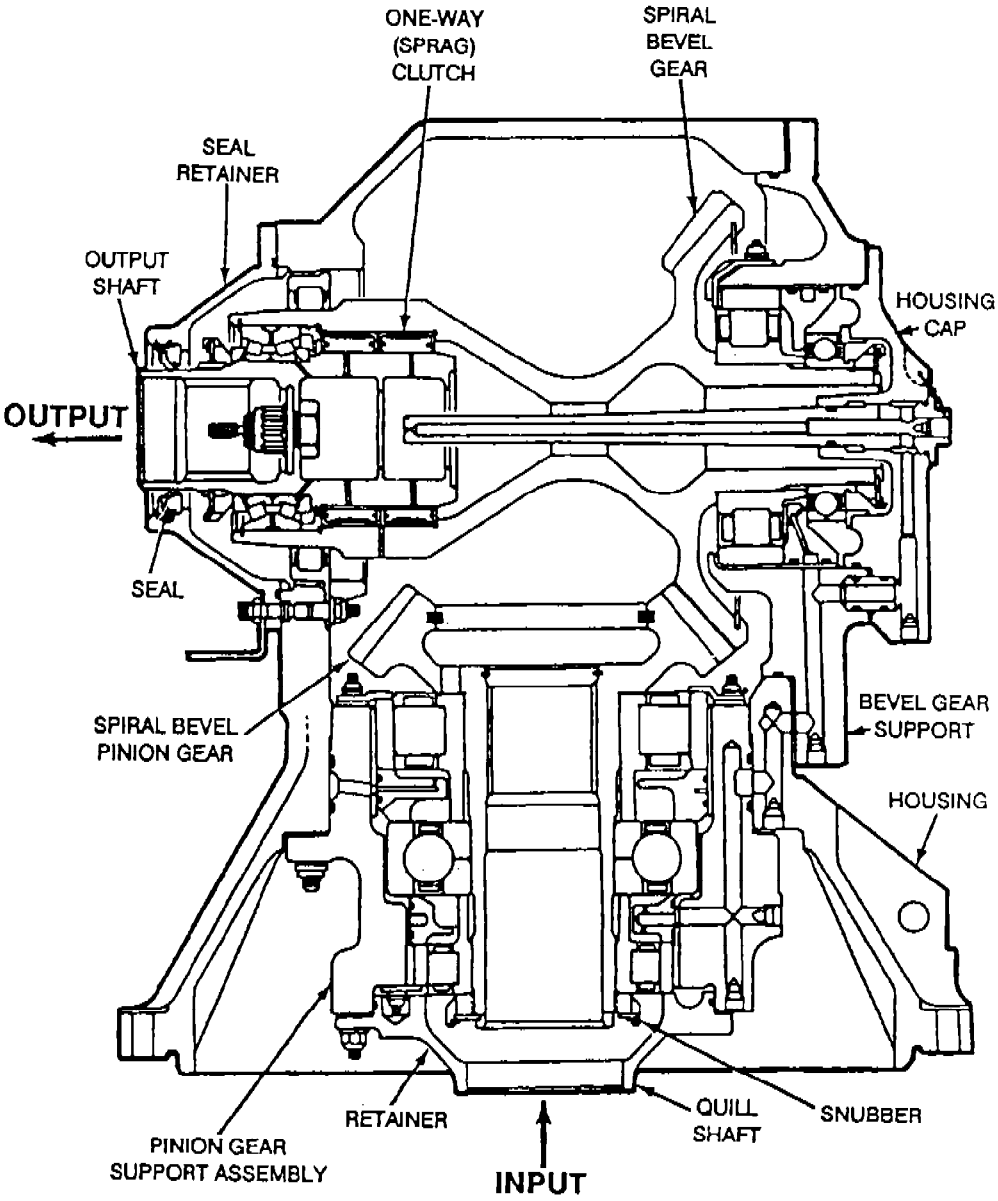

Figure 3-3.J. Sectional View of Engine Transmission.

h. Oil System Components. For each engine transmission there is a complete and separate oil system (Figure 3-3.K). The oil system is made up of the transmission sump, transmission lubrication jets, check valve, electrical chip detector, oil temperature transmitter (bulb), oil pump, oil pressure transmitter (transducer), filter and relief valve assembly, oil tank, and oil cooler. Although the oil systems of the engine transmission and engine–combining transmission are not interconnected, oil pressure and circulation for both types of transmissions are provided from a six–element oil pump mounted onto and driven by the engine–combining transmission.

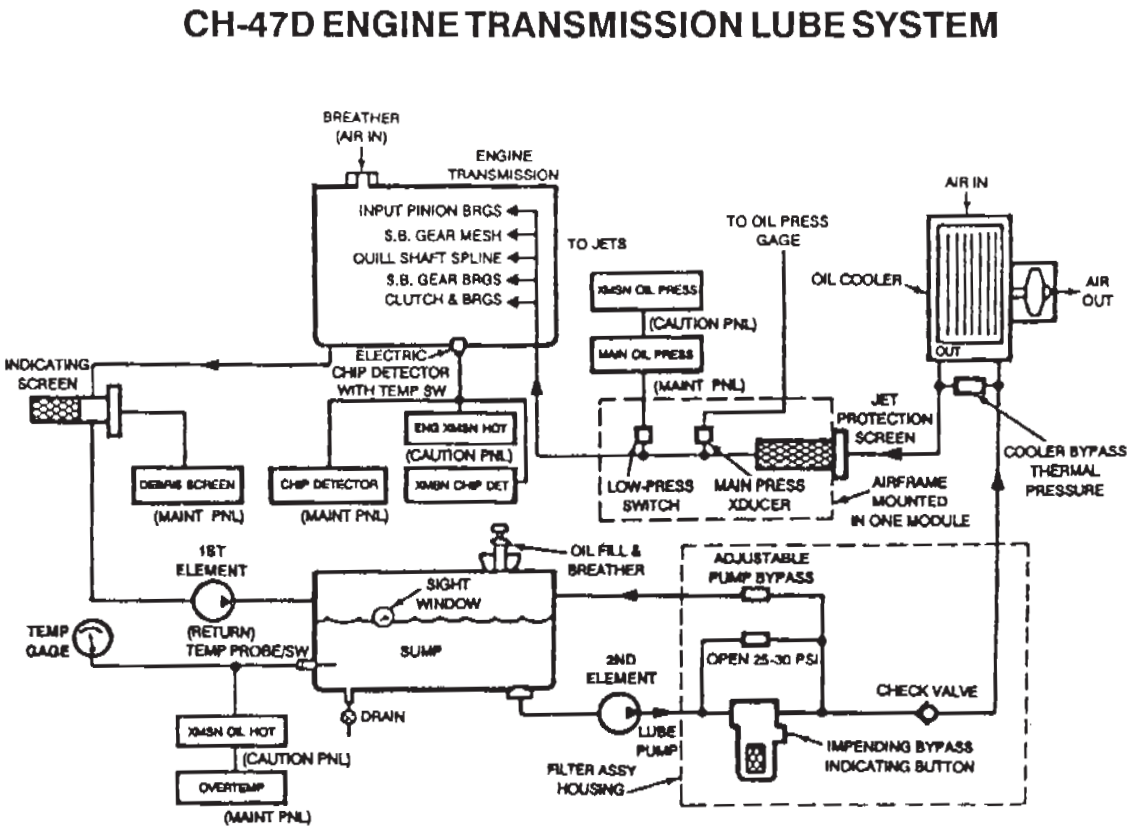

Figure 3-3.K. Engine Transmission Oil System.

The engine–combining transmission is a three–section tank that is mounted onto and above the engine–combining transmission: one section for the right–hand engine transmission, one section for the left–hand engine transmission, and one section for the engine–combining transmission. The oil filter and relief valve assembly for each of the engine transmissions and engine–combining transmission are mounted on the aft side of the oil tank. The oil cooler for the engine transmissions is mounted on top of the combining transmission. It receives cooling air from the fan assembly mounted on top of the combining transmission.

i. Oil Circulation. Oil is circulated in each transmission lubrication system by two separate elements of the six–element lubrication pump in the combining transmission. Oil flows from the oil tank through the pressure pump, through the filter and relief valve assembly, through the oil cooler, and through the check valve. Then the oil flows into the transmission where it is sprayed on the gears and bearings by various jets. Oil is scavenged from the sump by the scavenge section of the oil pump and returned to the oil tank.

j. Engine–Combining Transmission. The combining transmission is a central collection and distribution point for the drive system. The combining transmission is mounted in the lower forward section of the pylon. Torque from the engine transmission is transmitted by the combi£ng transmission and the forward and aft synchronizing drive shafts to the forward and aft rotary–wing drive transmission. Speed reduction is also attained within the combining transmission. The output shaft drives the lubricated pump. The three–section oil tank (one section each for the combining transmission and each engine transmission) forms the uppermost portion of the combining transmission.

(1) Oil System Components. The combining transmission oil system is a complete and separate oil system. The system includes the oil sump, oil temperature transmitter (bulb), oil pump, oil pressure transmitter (transducer), filter and relief valve, bypass valve, transmission lubricating jets, check valve, magnetic chip detector, oil tank, and oil coolers.

NOTE

The reservoir for the oil system is the center section of the three–section oil tank on the combining transmission. The three–section oil cooler and fan assembly is mounted on the top section of the transmission.

(2) Oil Circulation. Oil is circulated by two separate elements: one pressure element and one scavenge element of the six–element oil pump in the combining transmission (Figure 3-3.L and 3-3.M). Oil is routed from the oil tank through the filter and bypass valve and through an external line to the oil cooler. The oil is then routed by an external line through a check valve to the transmission. In the transmission oil is distributed through internal passages and jets and is sprayed on bearings and gears. Oil is scavenged from the sump through internal passages by the scavenge element of the oil pump. The pump then pumps the oil to the tank. A sight level gage is installed on the forward end of the oil tank.

k. Forward Rotary–Wing Drive Transmission. Torque is delivered to the forward rotary–wing drive transmission by the forward synchronizing drive shaft from the combining transmission (Figure 3-3.N). The forward rotary–wing transmission then changes the direction of torque from a horizontal plane to a vertical plane. This reduces the input shaft speed. The forward rotary–wing transmission transmits the torque through the rotary–wing drive shaft (mast) to the rotor bead.

(1) Oil System Component. The oil system serving the forward rotary–wing drive transmission is a complete, separate system. It is a wet–sump system, which includes the oil temperature transmitter (bulb), screens, oil pressure pump, oil pressure transmitter (transducer), relief valve, pressure filter, magnetic chip detector, oil cooler, and No.1 flight control pump.

(2) Oil Circulation. Oil from the sump flows through the screen to the inlet of the pressure pump. The pump pressurizes the system and pumps oil through the filter and cooler and then back to the transmission. Drilled and cored passages in the transmission distribute the oil to lubricators and oil jets The lubricators and jets spray the oil into the transmission bearings and onto the rotating gears.

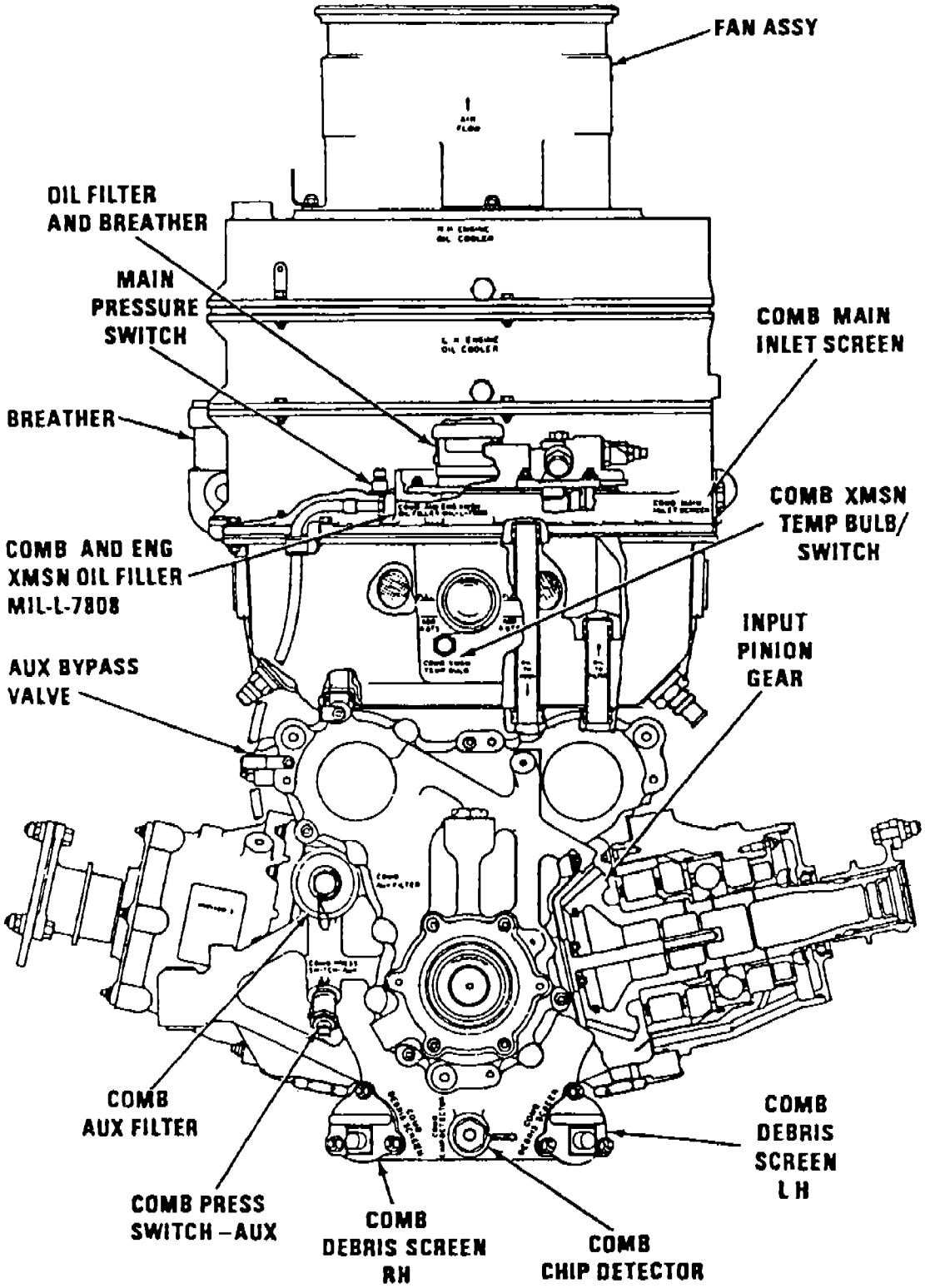

Figure 3-3.L. Combining Transmission – Sectional View.

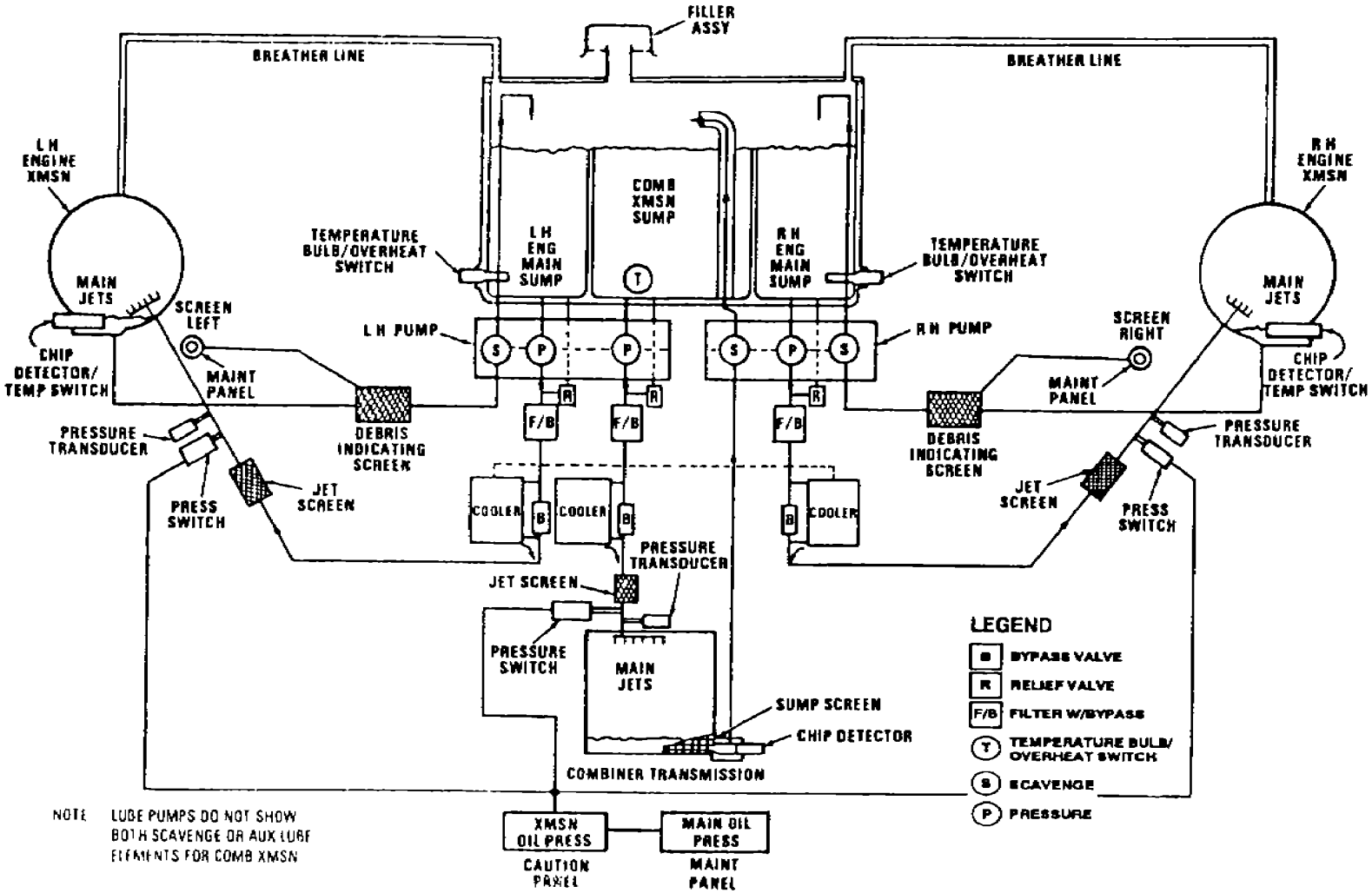

Figure 3-3.M. Combining Transmission Oil System – Schematic Diagram.

l. *Aft Rotary–Wing Drive Transmission.* Torque is delivered to the aft rotary–wing drive transmission by the aft synchronizmg drive shaft from the combimng transmission. The direction of torque changes from a horizontal plane to a vertical plane, and the aft rotary–wing transmission reduces input shaft speed (Figure 3-3.O). The aft rotary–wing transmission transmits the torque through the rotary–wing drive shaft (mast) to the rotor head. In addition to the reduction gearing, there are two accessory drive gears. One, driven by the input shaft, drives the transmission oil–cooling fan shaft and an oil scavenge pump. A second accessory gear drives the accessory gear section. The accessory gear section consists of gearing for driving the lubrication pump, one flightcontrol hydraulic pump, two AC generators, and a utility hydraulic pump. A one–way–drive clutch is united into one body in the accessory gear drive shaft for the accessory gear section. This type of clutch permits the accessory gears to overrun the transmission gears when the accessory gears are being driven by the hydraulic motor. In normal operation the accessory gears are driven by the bevel gear in the transmission through the clutch.

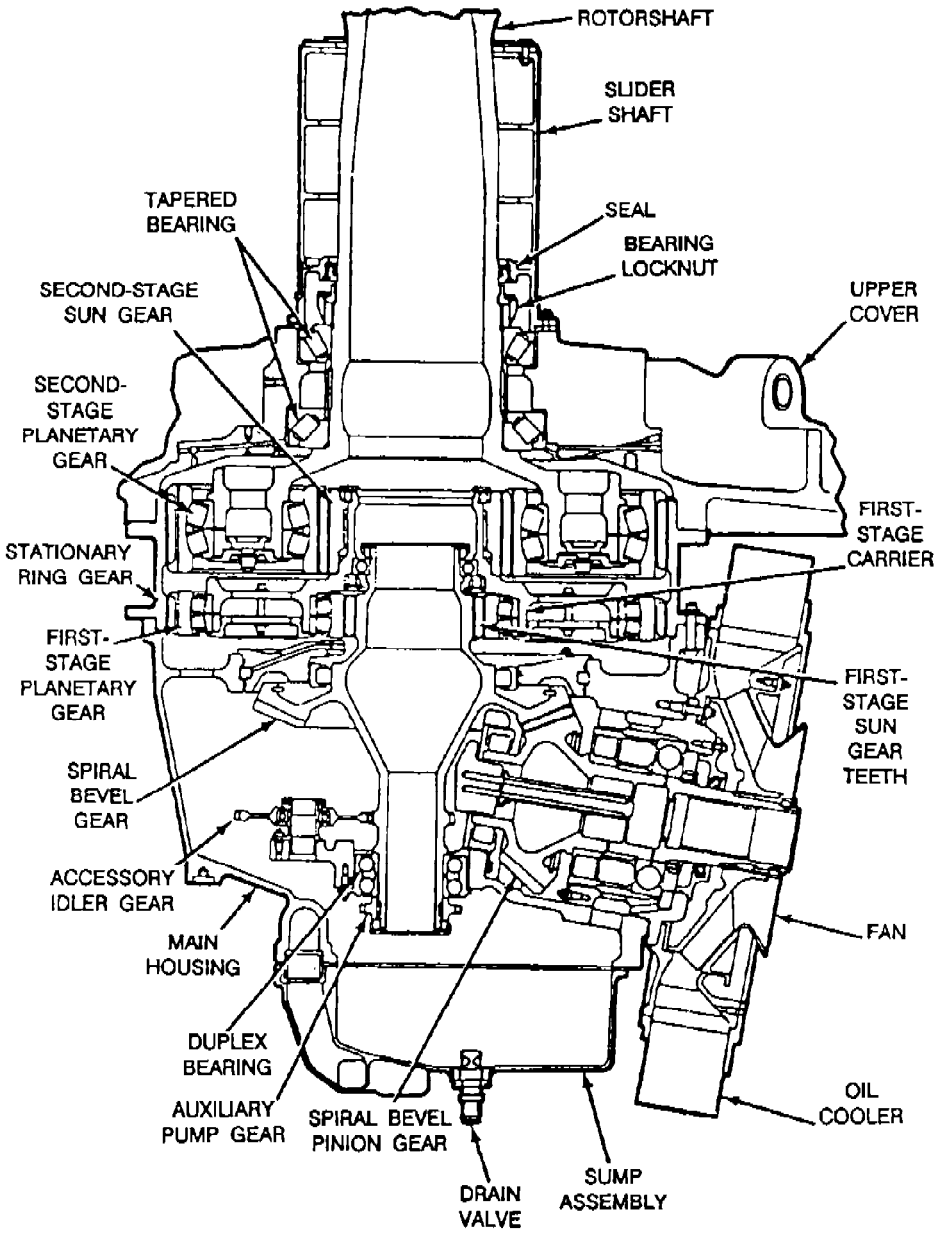

Figure 3-3.N. Sectional View of Forward Transmission.

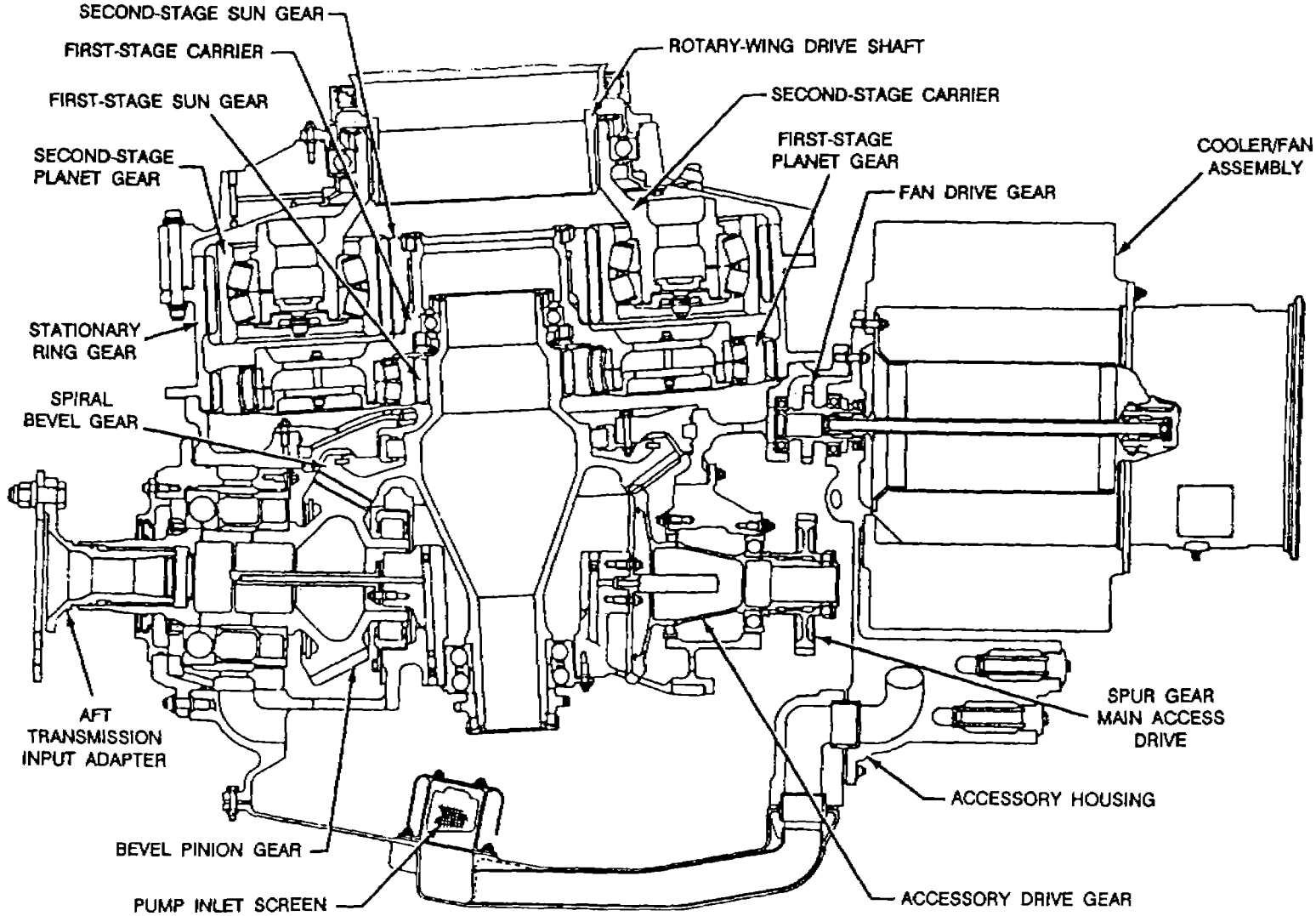

Figure 3-3.O. Sectional View of Aft Transmission.

(1) Oil System Components. The oil system serving the aft rotary–wing drive transmission is a complete, separate system (Figure 3-3.P). It is a wet–sump system which includes the temperature transmitter (bulb), magnetic chip detector, screens, drain valve, oil level sight gage, oil pressure pump, oil pressure transmitter (transducer), relief valve, pressure Filter, and oil cooler.

NOTE

The sump is the lower circular casting of the transmission. The fan drive shaft drives an oil scavenger pump in the fan drive housing. The pump returns scavenge oil which collects in the forward part of the transmission when the aircraft is in a nosedown attitude.

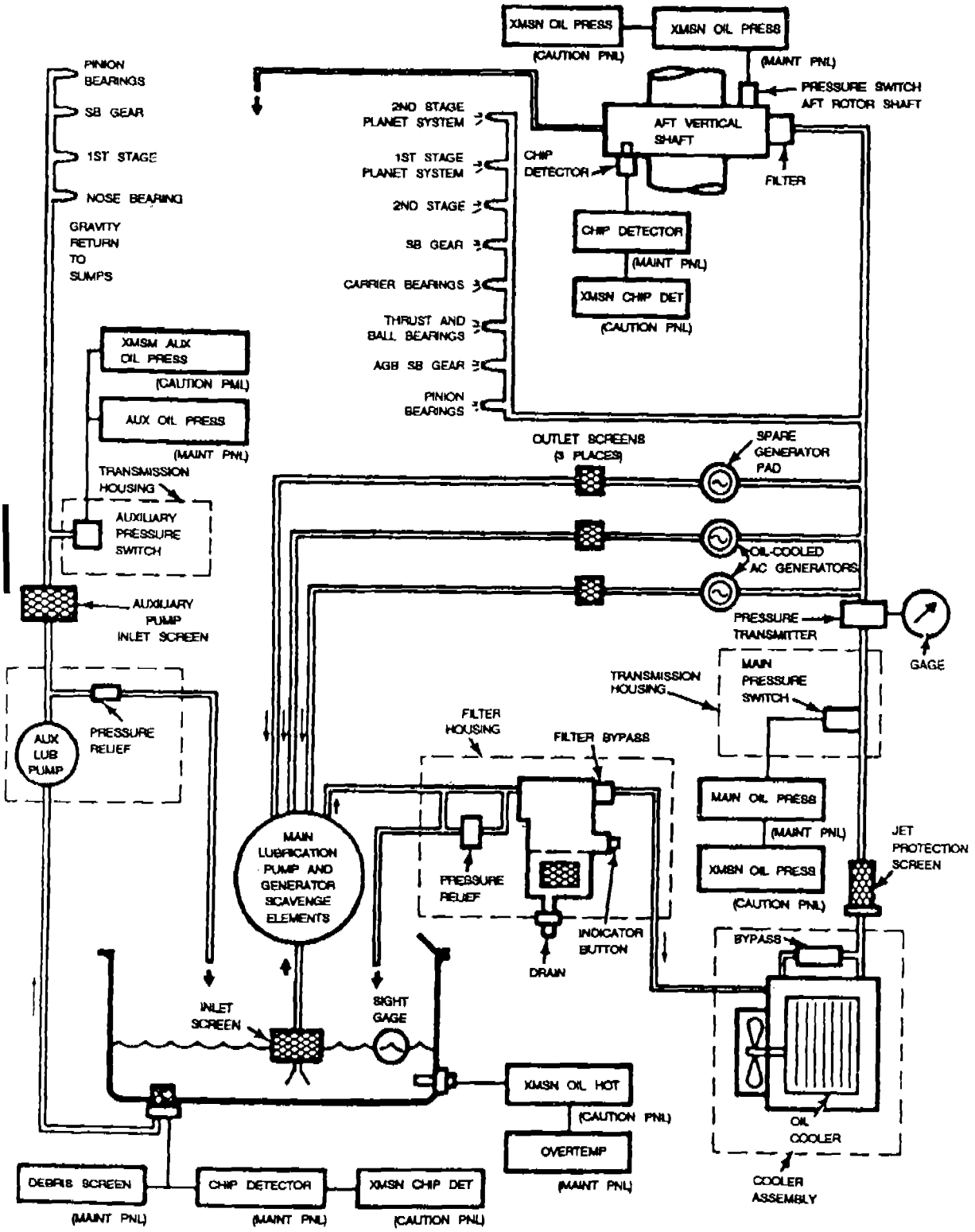

Figure 3-3.P. Aft Transmission Oil System – Schematic Diagram.

(2) Oil Circulation. Oil is drawn from the sump, through the screen to the inlet of the pressure pump. The pump pressurizes the system and pumps the oil through the filter and cooler and back to the transmission. Oil is supplied through external piping to the aft rotary–wing drive shaft (mast) thrust bearing. Drilled and cored passages in the transmission unit distribute oil to lubricators and jets. The lubricators and jets spray oil into the transmission bearings and onto the rotating gears. A scavenge pump in the fan drive housing is driven by the fan drive shaft. The pump returns scavenged oil which collects in the forward part of the transmission when the aircraft is in a nose–down attitude.

m. Drive Shafts. The purpose of drive shafting is to transmit torque from the engines to the transmissions and rotors. It also transmits torque to the fan assembly.

(1) Engine Drive Shaft. There are two engine drive shaft assemblies each tandem–rotor power train system (Figure 3-3.Q). The purpose of the engine drive shaft assembly is to transmit torque from each of the engine transmissions to the combining transmission. The shaft is a hollow, dynamically balanced tube. Each shaft is connected to the combining transmission and engine transmission by an adapter and plate assemblies, one on each end of the shaft. The adapter and plate assemblies provide flexibility in the shaft assembly.

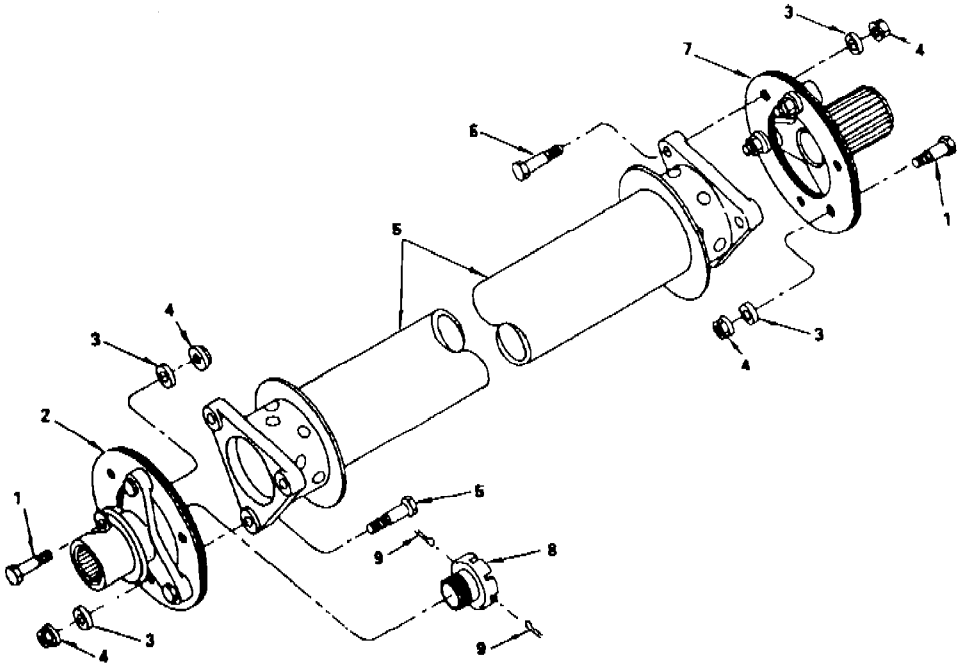

1. Bolt
2. Adapter and Plate Assembly
3. Special Washer
4. Nut
5. Shaft Assembly
6. Bolt
7. Adapter and Plate Assembly
8. Retainer Nut
9. Cotter Pin

Figure 3-3.Q. Engine Drive shaft Assembly.

(2) Forward Synchronizing Drive Shaft. The purpose of the forward synchronizing drive shaft is to transmit torque from the engine–combining transmission. It also keeps the forward and aft rotors mechanically connected and in phase with each other. The shafting assembly consists of a series of shafts, each of which is a hollow, dynamically balanced tube. Each shaft is interconnected to the other, to the combining transmission on the aft end, and to the forward rotary–wing drive transmission on the forward end by an adapter and plate asscmbly. The shaft is mounted and supported by bearings and support assemblies which contain shock mounts.

(3) Synchronizing Drive Shaft. The purpose of the aft synchronizing drive shaft is to transmit torque from the engine–combining transmission to the aft rotary–wing drive transmission (Figure 3-3.R). The aft synchronizing drive shaft is similar to and supported in the same manner as the forward synchronizing drive shaft assembly. The only difference is that the aft synchronizing shaft assembly contains fewer shaft units and fewer supports.

AFT SYNCHRONIZING SHAFTS

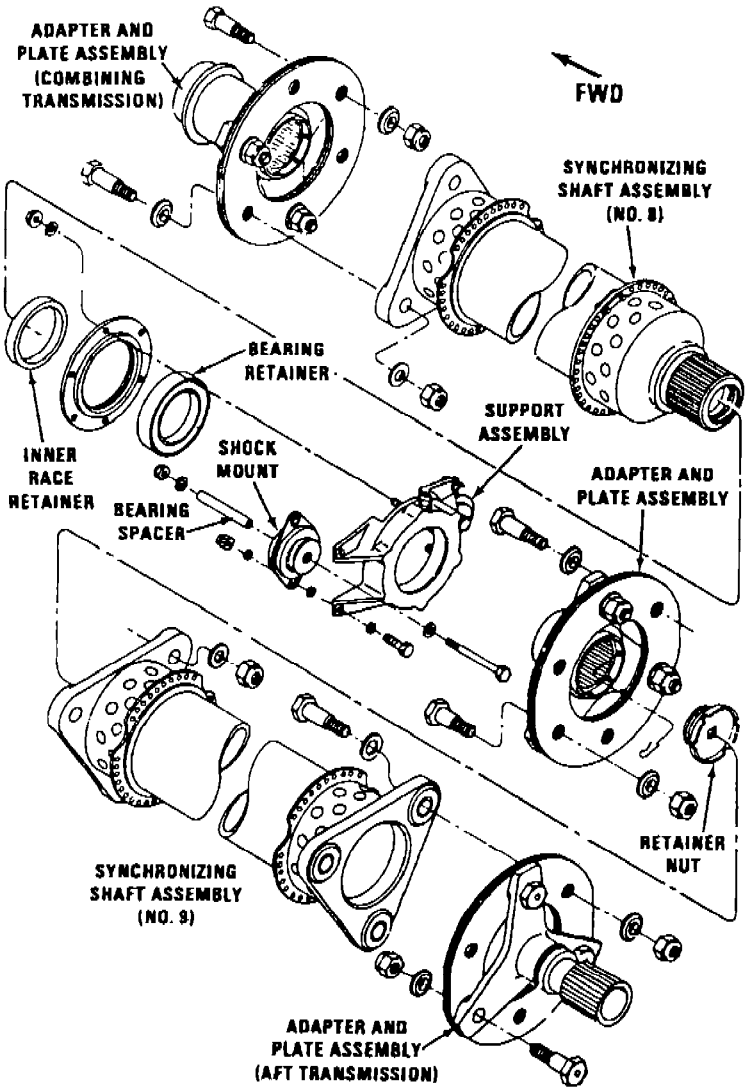

Figure 3-3.R. Synchronizing Drive Shaft.

3-5 Helicopter Flight Controls. The various helicopter controls are explained in the following paragraphs.

a. *Cyclic Pitch Control.* The cyclic pitch control changes the tilt of the main rotor for control about the longitudinal axis (roll) and lateral axis (pitch). It acts through a mechanical linkage, as shown in figure 3-4, to increase the pitch of the retreating blade and decrease the pitch of the advancing blade on each cycle of rotation.

b. *Collective Pitch Control.* The collective pitch control, as shown in figure3-5, varies the lift of the main rotor by increasing or decreasing the pitch of all blades at the same time. Raising the collective pitch control increases the pitch of the blades, thereby increasing the lift. Lowering the control decreases the pitch of the blades, causing a loss of lift. Collective pitch control is also used in coordination with cyclic pitch control to regulate the airspeed of the helicopter.

c. *Swashplate.* The swashplate assembly transmits movement of the flight controls to the main rotor blades. Refer to the applicable maintenance manual for unique features of a swashplate on a specific aircraft.

d. *Throttle Control.* The throttle control is mounted on the collective pitch grip, as shown in figure 3-5, and is operated by rotating the motorcycle–type grip. Rotating the grip outboard increases rpm, and rotating it inboard decreases rpm.

e. *Torque Control.* Torque control provides for movement about the vertical axis (yaw). This movement is controlled by the directional–control pedals in the cockpit.

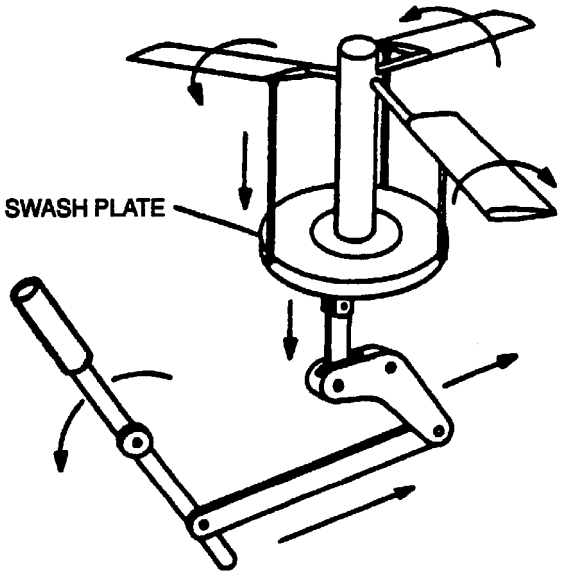

Figure 3-4. Cyclic Pitch Control.

3-6 Main Rotor Assemblies. Rigid, semi–rigid, and fully articulated rotor assemblies are described in the following paragraphs.

a. *Semi–Rigid Rotor.* In a semi–rigid rotor system, the rotor blades are rigidly interconnected to the hub, but the hub is free to tilt and rock with respect to the rotor shaft. In this system, only two–bladed rotors are used. The rotor flaps as a unit, that is, as one blade flaps up, the other blade flaps down an equal amount.

b. *Fully Articulated Rotor.* Fully articulated rotor systems permit individual movement of the blades from the hub in both a vertical and horizontal plane. The hinge points and direction of motion around each hinge are shown in figure 3-6.

(1) Blade flapping. The rotor blades are attached to the rotor hub by a horizontal hinge which permits the blades to move in a vertical plane, and flap up or down, as they rotate, as shown in figure 3-8. In forward flight and assuming that the blade–pitch angle remains constant, the increased lift on the advancing blade will cause the blade to flap up, decreasing the angle of attack because the relative wind will change from a horizontal direction to a more downward direction. The decreased lift on the retreating blade will cause the blade to flap down, increasing the angle of attack

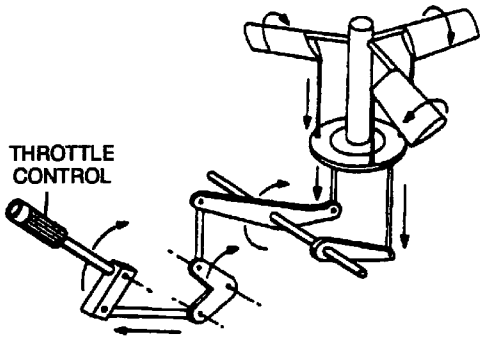

Figure 3-5. Collective Pitch Control.

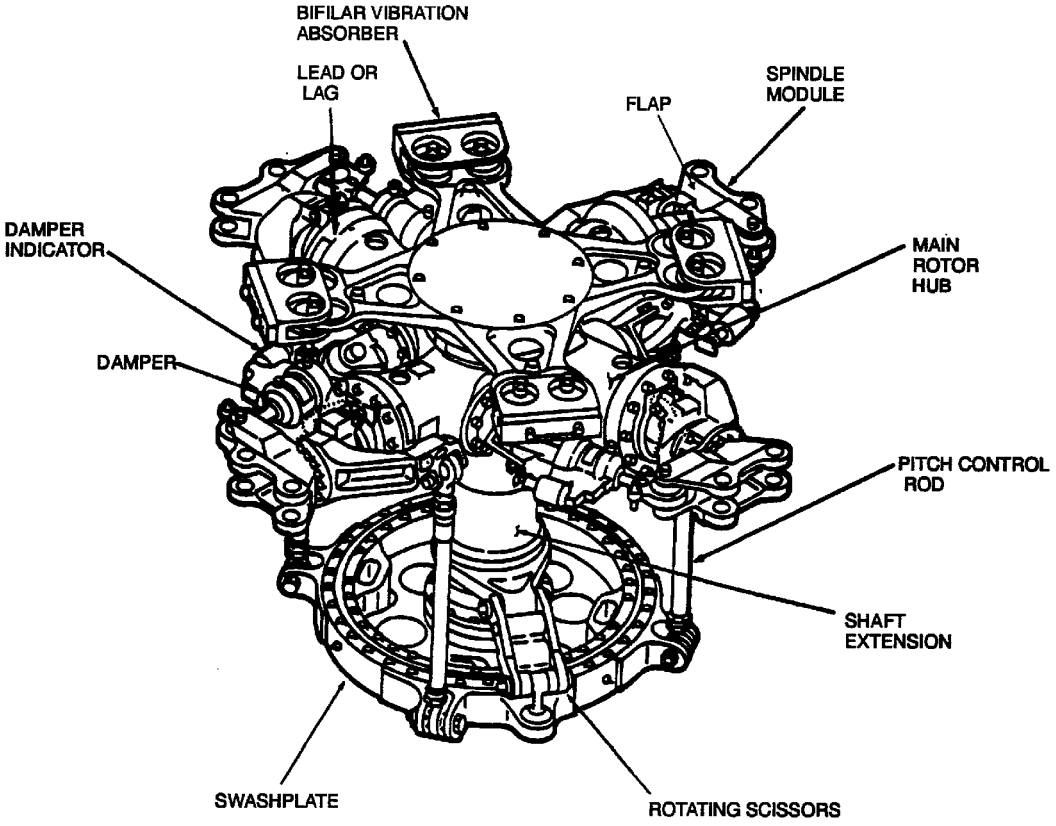

Figure 3-6. Fully Articulated Rotor Head.

because the relative wind changes from a horizontal direction to a more upward direction. The combination of decreased angle of attack on the advancing blade and increased angle of attack on the retreating blade through blade flapping action tends to equalize the lift over the two halves of the rotor disk

(2) Blade feathering. The blades of a fully articulated rotor can be rotated about their spanwise axis or feathered. Feathering is accomplished by cyclic stick movements which are transmitted by mechanical linkage through the swashplate to change the pitch angle of each rotor blade.

(3) Blade leading and lagging. The blade flap ping action creates an unbalanced condition with resulting vibration. To prevent this vibration, a drag hinge, as shown in figure 3-8, is incorporated which permits the blade to move back and forth in a horizontal plane. This movement is called leading when the blade moves forward and lagging when moving aft.

3-7. Main Rotor Blades Types, construction, and classification of rotor blades, along with terms common to them, will be discussed in the following paragraphs.

a. Types. There are two general types of main rotor blades in use today. These types are metal and fiberglass. They are described in the following paragraphs.

(1) Metal. Aluminum is the most frequently used metal in rotor blades due to its light weight and strength characteristics. It is found in the honeycomb core, spars, ribs, and doublers, and is also used as the skin covering. Titanium is used for spars and abrasion strips on some rotor blades.

(2) Fiberglass. Main rotor blades that contain fiberglass may have straight fiberglass or may have a composite mixture consisting of ingredients such as fiberglass, titanium, Nomex, glass fiber epoxy resin, and an elastomeric. Fiberglass is used for skin and spars.

NOTE

Metal and fiberglass rotor blades should not be intermixed. See applicable maintenance manual for uses and restrictions.

b. Nomenclature. Table 3-1 contains terms and definitions commonly associated with rotor blades.

c. Blade Construction. The various ways that main rotor blades are constructed are described in the following paragraphs.

(1) Single pocket fairing. A fairing consists of formed and slotted ribs made of clad aluminum alloy to which are bonded the upper and lower skins. The skins are usually made of laminated, plastic-impregnated glass cloth.

(2) Multiple pockets or fairings. These fairings, also called basic fairing, contain formed and slotted aluminum alloy ribs. The skins covering the fairings are made of laminated scotchply. The fairings are found between the root end fairing and the tip end fairing.

(3) Internal structural components. Typical internal structural components are the spar or spars, ribs, doublers, wedges, and a honeycomb core.

Figure 3-7. Blade Rapping Action (Vertical Plane)

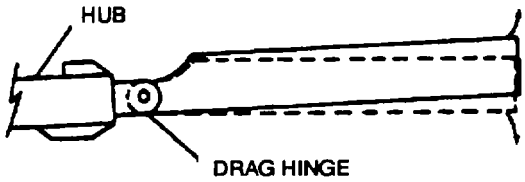

Figure 3-8. Blade Leading and LaggIng (Horizontal Plane)

(4) Bonds and bonding. Bonded blades have components which are lapped or covered by metallic or fibrous substances to increase strength and solidity. Bonded assemblies typically consist of the spar, fairing assemblies, nose and transition cap, trailing edge, and trim tabs.

d Blade Classification Data. The data plate on a main rotor blade usually contains the manufacturers name and blocks in which the following information is contained.

(1) Part number. This is the number assigned to the particular type of blade. It is used for ordering new blades.

(2) Revision. This is normally an alpha character that is added when the blade is modified.

(3) Serial number. This is the number assigned to each blade so it can be tracked by flying hours, length of time installed, repairs made, and similar information.

3-8. Tall Rotor Hubs The function and types of tail rotor hubs are discussed herein.

a. General. The tail rotor hub and blade assembly counteracts the torque of the main rotor and also provides directional control.

Table 3-1. Main Rotor Blade Terms

TERM	DEFINITION
Blade planform	The contour of a blade as viewed from above.
Blade twist	The amount of offset that the chord line at the blade tip has from the chord line at the blade root.
Blade skin	The outer surface of the blade that provides the airfoil shape.
Tip	That portion of the rotor blade that is furthermost from the rotor hub.
Root	That portion of the rotor blade that attaches the rotor blade to the rotor hub.
Leading edge	The frontmost portion of the rotor blade.
Trailing edge	The rearmost portion of the rotor blade.
Span and span line	The straight line joining the tip and root ends of the rotor blade.
Chord and chord line	The straight line joining the leading and trailing edges of the rotor blade.
Spar	The main longitudinal member or members of the rotor blade that the ribs or spar tubes are connected to, normally D-shaped.
Doublers	Reinforcing structures which are attached to the spar to give additional strength to the rotor blade.
Top of blade	The uppermost surface of the rotor blade.
Bottom of blade	The lowermost surface of the rotor blade.
Rotor blade stations	Reference points on the rotor blade which are measured, usually in inches, from the center of the rotor hub.

b. Types. Common types of tail rotor hubs are described in the following paragraphs.

(1) Delta hinge type. This type of tail rotor hub assembly has a preconed or split cone arrangement with a flex-beamed-type or grooved yoke and a delta hinge mounted on a trunnion which is splined to the tail rotor gearbox shaft. Rotor blade pitch change occurs at the attach points to the spherical bearings.

(2) Flapping action tail rotor. On this type of tail rotor hub, the blade assemblies telescope over the hub and are bolted to an interconnecting tension-torsion strap assembly within the hub. Blade angle is controlled by the pitch control assembly.

(3) Articulated tail rotor. The articulated tail rotor head has two forks. Each fork has a hub with two blades. The resilient mounts allow each hub and blade to move in and out in a seesaw motion. Blade twist is controlled by a stainless steel strap pack that passes through each hub.

39. Tall Rotor Blades. The following paragraphs describe the types and construction of tail rotor blades. Balancing and trammeling are also discussed.

a. Types. Tail rotor blades are the same basic types as main rotor blades.

(1) Metal. Aluminum is the most common metal used in tail rotor blades. It is found in the skin and spars. Stainless steel is used in spars and on leading edges.

(2) Fiberglass. Fiberglass tail rotor blades can be crossply fiberglass or graphite composite types. Fiberglass is used for spars and skin.

b. Construction. Use of metal and fiberglass components in the construction of tail rotor blades is contained herein.

(1) Metal. Metal tail rotor blades typically are all-metal bonded assemblies with a stainless steel spar and honeycomb core or an all-metal shell bonded to a honeycomb core.

(2) Fiberglass. Fiberglass tail rotor blades typically have graphite composite spars running from tip to tip. In some uses, the spars are covered with crossply fiberglass to form the airfoil shape.

c. Balance. Balance is critical to tail rotor blades because of their high rotational speed, compared to the main rotor blades. Tail rotor blades can be balanced in both the span and chord directions.

(1) Spanwise. Spanwise balancing of the tail rotor blades involves adding or removing weight at the blade tip. A balancing kit should be used with adapters for the specific type blades.

(2) Chordwise. Chordwise balancing of the tail rotor blades involves adding of removing balance washers to the pitch arm. A balancing kit with adapters should be used for the specific blades being balanced.

NOTE

- **Always try to balance the blades by deleting weights or washers. Keep over-all weight at a minimum.**

- **Consult the applicable maintenance manual for the particular model of helicopter.**

d. Trammeling. Trammeling is the method of using a trammel bar to adjust or set the adjustable control rod or tail rotor pitch change link A trammel bar is a precision tool with adjustable trammel heads. The shaft pins on the trammel heads are put in the clevis holes of the control rods or change links to get the exact dimension of the part being replaced.

3-10. Blade Balance. Blade balance is very important to safe operation of a helicopter. Methods used to balance blades are discussed in the following paragraphs.

a. General. Out of balance blades can cause a flutter which affects helicopter operation. Even though rotor blades are balanced against a master blade during manufacture or overhaul, they occasionally need to be rebalanced because of wear or damage.

b. Mass Balance Weights (Bars). Certain fiberglass and composite structure rotor blades contain weights which are incorporated into or right behind the spar. These blades are balanced during manufacture.

c. Spanwise Balance Weights. Spanwise balance is accomplished by changing (preferably reducing) the weight in one of two areas. Some model helicopters have cylindrical tubes behind the spar to use as a container for weights. On other helicopters, one-inch tape is used to determine how much lead weight should be added to the hollow shank of the blade attach bolt. Consult the applicable maintenance manual.

d. Tracking Weights. Tracking weight adjustments are made to compensate for the added weight of repairs. The location of the repair is cross-referenced to a chart in the maintenance manual. The chart will indicate weight removal or shifting necessary to maintain balance. Tracking weight adjustments are recorded on the DA Form 2408-16, Component Historical Record. Consult the applicable maintenance manual.

e. Trim Tabs. Trim tabs are adjusted by using a blade bending tool which is calibrated in degrees. The blades are raised by bending the tab up and lowered by bending the tab down. Consult the applicable maintenance manual for procedures and bending limits for the trim tabs.

3-11. Rotor Removal, Cleaning, and Inspection. Rotor removal, cleaning, and inspection procedures are explained in the applicable Maintenance Manuals.

3-12. Rotor Blade Repair. General procedures for metal and fiberglass rotor blade repair are described in the following paragraphs. Refer to the applicable maintenance manual for specific procedures.

a. Metal Blade Repair. General procedures for metal blade repair are described in the following paragraphs.

(1) Negligible damage. Negligible damage can be defined as a nick a scratch, a dent, or a gouge, depending on the type of helicopter and the construction of the rotor blade. The location of the damage on the blade, i.e. top, trailing edge, root area, by the tip, also has a bearing on being called negligible damage. Consult the applicable maintenance manual for specific definitions and corrective actions, if any.

(2) Damage repairable by patching. Typical patching procedures for damaged rotors are explained in the following steps. Refer to applicable maintenance manual for specific procedures.

(a) Remove paint from area to be patched. Protect core if exposed, so as not to contaminate while cleaning.

(b) Draw a circle around damaged area large enough to encompass damage.

(c) Cut out skin around damaged area. This may be accomplished by using a hole saw or scribing through skin with a sharp instrument

(d) Remove skin in cutout area, disturbing core as little as possible.

(e) Deburr edges of hole, ensuring skin is free of scratches and nicks.

(f) Prepare a patch of the same type of metal. Patch shall be large enough to overlap hole at least 0.75 inch all around perimeter. Deburr edges of patch.

WARNING

Cleaning materials are flammable and toxic. Avoid skin contact and breathing of solvent vapors.

(g) Sand mating surfaces of blade and patch, using No. 400 grit paper. All paint and primer shall be removed from bond surface of blade. Wipe both surfaces clean with a rag soaked in methylethylketone, Federal Specification TT-M-261. Dry with clean cloth.

CAUTION

Area to be bonded shall be clean, dry, and free of grease, oil, wax, etc. Bonding will not hold properly on a dirty surface.

(h) Apply adhesive to bond areas of patch and blade.

(i) Apply patch to blade, moving patch slightly back and forth under pressure, to seat properly and expel air pockets in adhesive. Blend out excess adhesive around edges.

(j) Patch may be held in place while curing with rubber bands made from inner tube or other mechanical means.

(k) Refinish patch and adjacent area.

(3) Repairing blade pockets. Holes in blade pocket skin shall be repaired, as applicable, with aluminum tape, a bonded aluminum patch, or with urethane foam and aluminum tape. Refer to the applicable maintenance manual for specific repair procedures.

(4) Tip cap damage. Inspect the tip cap for nicks, cracks, and corrosion. Check the balance weights for security of attachment. Refer to the applicable maintenance manual for specific repair procedures.

(5) Corrosion removal. Remove corrosion from skin using abrasive cloth. Refer to the applicable maintenance manual for specific removal procedures.

(6) Trailing edge voids. Any voids not in excess of the allowable limits as shown by the applicable maintenance manual are to be sealed with adhesive. Blades with voids which exceed allowable limits shall be forwarded to depot for evaluation and repair.

b. Fiberglass Blade Repair. For fiberglass repairs, refer to the applicable maintenance manual.

3-13. Rotor Blade Painting. Main and tail rotor painting is explained in the following paragraphs. After complete repainting or extensive touch-up, rotor blades shall be rebalanced in an intermediate or overhaul maintenance facility. Refer to TM 55-1500-345-23 for detailed painting practices and procedures.

CAUTION

Painting of main rotor and tail rotor blades may create out-of-balance and unacceptable vibration conditions. Strict adherence to instructions is required to reduce the probability of creating these out-of-balance conditions. Care must be exercised to apply proportionate amounts of paint to each blade to maintain proper balance.

NOTE

Complete repainting of main and tail rotor blades on UH-60, UH-1, OH-58, AH-1, AH-64, OH-6, and CH-47 aircraft is normally accomplished during blade overhaul only. Main and tail rotor blades are individually balanced (spanwise and chordwise) to master blades during overhaul after painting to insure interchangeability between blades of the same configuration. Painting of blades in the field may cause subsequent interchangeability problems.

a. Main Rotor Painting. Tactical and nontactical aircraft rotor blade painting is described in TM 55-1500-345-23.

b. Spot Painting. Spot painting procedures are described in TM 55-1500-345-23.

c. Refinishing. Refer to the applicable maintenance manual for refinishing of rotor blades during maintenance.

3-14. Rotor Blade Alignment. Methods used to align rotor blades are described in the following paragraphs.

a. Telescopic Method. The telescopic method of blade alignment is done with the rotor hub and blade assembly removed from the helicopter. The main rotor hub and blade assembly is placed on stands which will allow a blade to move horizontally if it needs to be adjusted. An alignment scope is positioned on the hub and is used to sight on the alignment screw on the blade tip. Alignment adjustments are made by adjusting the drag brace. Consult the applicable maintenance manual for detailed instructions.

b. String Method. This method has been used for about 25 years and is considered good and accurate. A string is stretched between the alignment screws at the blade tips. The string should cross the rotor hub at the center of rotation. Consult the applicable maintenance manual for detailed guidance.

3-15. Troubleshooting Procedures (Rotor Systems). Reference applicable maintenance manual.

3-16. Helicopter Vibrations The following paragraphs describe the various types of vibrations. Table 3-2 shows the general frequencies into which frequencies are divided.

a. Extreme Low Frequency Vibration. Extreme low frequency vibration is pretty well limited to pylon rock Pylon rocking two to three cycles per second is inherent with the rotor, mast, and transmission system. To keep the vibration from reaching noticeable levels, transmission mount dampening is incorporated to absorb the rocking.

b. Low Frequency Vibration. Low frequency vibrations, 1/rev and 2/rev, are caused by the rotor itself. 1 /rev vibrations are of two basic types, vertical or lateral. A 1/rev is caused simply by one blade developing more lift at a given point than the other blade develops at the same point.

c. Medium Frequency Vibration. Medium frequency vibrations at frequencies of 4/rev and 6/rev are another inherent vibration associated with most rotors. An increase in the level of these vibrations is caused by a change in the capability of the fuselage to absorb vibration, or a loose airframe component, such as the skids, vibrating at that frequency.

d. High Frequency Vibration. High frequency vibrations can be caused by anything in the ship that rotates or vibrates at extremely high speeds. The most common and obvious causes; loose elevator linkage at swashplate horn, loose elevator, or tail rotor balance and track

3-17. Rotor Blade Tracking. Blade tracking is the process of determining the positions of the tips of the rotor blade relative to each other while the rotor head is turning, and of determining the corrections necessary to hold these positions within certain tolerances. The blades should all track one another as closely as possible. The purpose of blade tracking is to bring the tips of all blades into the same tip path throughout their entire cycle of rotation. Various methods of blade tracking are explained in the following paragraphs.

a. Flag and Pole. The flag and pole method, as shown in figure 3-9, shows the relative positions of the rotor blades. The blade tips are marked with chalk or grease pencil. Each blade tip should be marked with a different color so that it will be easy to determine the relationship of the other tips of the rotor blades to each other. This method can be used on all types of helicopters that do not have jet propulsion at the blade tips. Refer to the applicable maintenance manual for specific procedures.

b. Electronic Blade Tracker. The most common electronic blade tracker consists of a Balancer/Phazor, Strobex Tracker, and VIBREX Tester (see figure 3-10). The Strobex blade tracker permits blade tracking from inside or outside the helicopter while on the ground or inside the helicopter in flight. The system uses a highly concentrated light beam flashing in sequence with the rotation of the main rotor blades so that a fixed target at the blade tips will appear to be stopped. Each blade is identified by an elongated retro-reflective number taped or attached to the underside of the blade in a uniform location. When viewed at an angle from inside the helicopter, the taped numbers will appear normal. Tracking can be accomplished with tracking tip cap reflectors and a strobe light The tip caps are temporarily attached to the tip of each blade. The high-intensity strobe light flashes in-time with the rotating blades. The strobe light operates from the aircraft electrical power supply. By observing the reflected tip cap image, it is possible to view the track of the rotating blades. Tracking is accomplished in a sequence of four separate steps: ground tracking, hover verification, forward flight tracking, and auto rotation rpm adjustment (see figure 3-11).

c. Tail Rotor Tracking. The marking and electronic methods of tail rotor tracking are explained in the following paragraphs.

(1) Marking Method. Procedures for tail rotor tracking using the marking method, as shown in figure 3-12, are as follows:

NOTE

- **After replacement or installation of tail rotor hub, blades, or pitch change system, check tail rotor rigging and track tail rotor blades. Tail rotor tip clearance shall be set before tracking and checked again after tracking.**

- **The strobe-type tracking device may be used if available. Instructions for use are provided with the device.**

(a) Attach a piece of soft rubber hose six inches long on the end of a 1/2 x 1/2 inch pine stick or other flexible device. Cover rubber hose with prussian blue or similar type of coloring thinned with oil.

NOTE

Ground runup shall be performed by authorized personnel only.

(b) Start engine in accordance with applicable maintenance manual. Run engine with pedals in neutral position. Reset marking device on underside of tailboom assembly. Slowly move marking device into disk of tail rotor approximately one inch from tip.

(c) When near blade is marked, stop engine and allow rotor to stop. Repeat this procedure until tracking mark crosses over to the other blade, then extend pitch control link of unmarked blade one half turn.

(2) Electronic method. The electronic VIBREX balancing and tracking kit is housed in a carrying case and consists of a Model 177M-6A Balancer, a Model 135M-11 Strobex, track and balance charts, an accelerometer, cables, and attaching brackets. The VIBREX balancing kit is used to measure and indicate the level of vibration induced by the main rotor and tail rotor of a helicopter. The VIBREX analyzes the vibration induced by out-of-track or out-of-balance rotors, and then by plotting vibration amplitude and clock angle on a chart the amount and location of rotor track or weight change is determined. In addition, the VIBREX is used in troubleshooting by measuring the vibration levels and frequencies or revolutions per minute (RPM) of unknown disturbances. The main units of the VIBREX are the Balancer/Phazor 177M6A, Strobex Tracker 135M11, and VIBREX Tester II. The primary airframe mounted components are three Accelerometers 4177B and two Magnetic Pickups 3030AN. Refer to TM 55-4920-402-13 for detailed operating instructions.

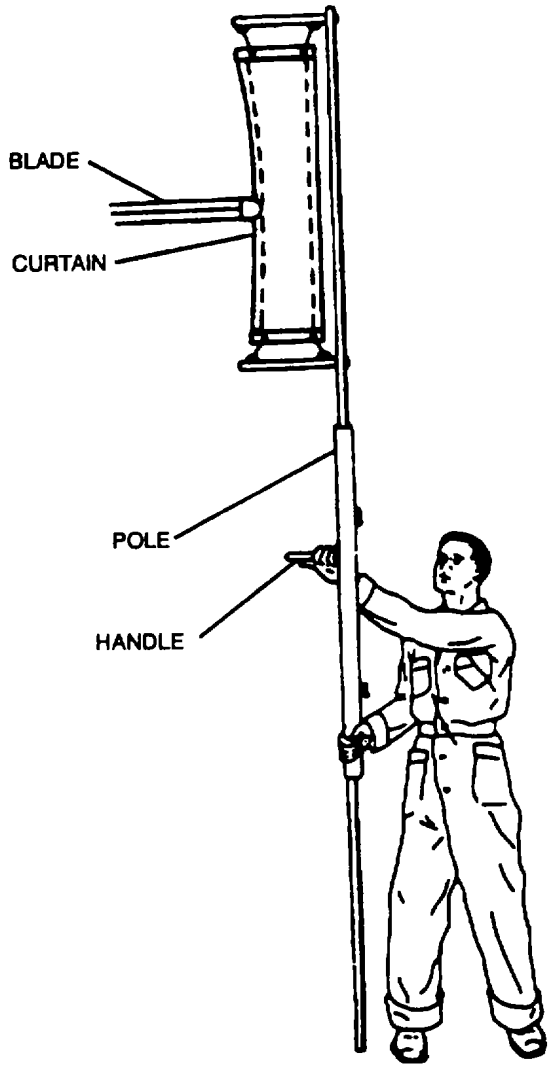

Figure 3-9. Rotor Blade Tracking

Table 3-2. Helicopter Vibration Types

Frequency level	Vibration
Extreme low frequency	Less than 1/rev PYLON ROCK
Low frequency	1/rev or 2/rev type vibration
Medium frequency	Generally 4, 5, or 6/rev
High frequency	Tail rotor speed or faster

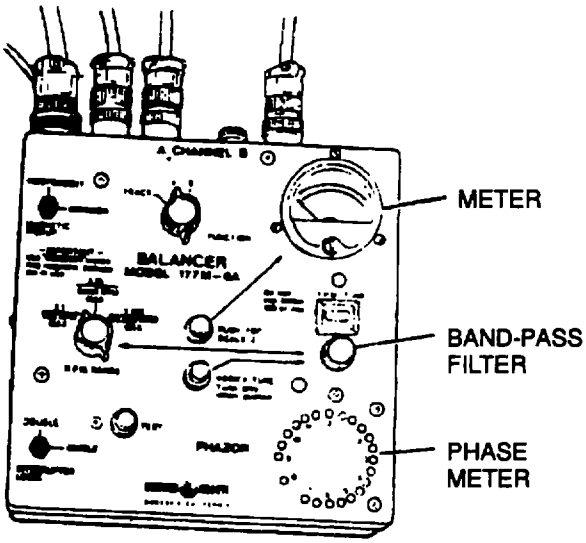

BALANCER/PHAZOR 177M6A

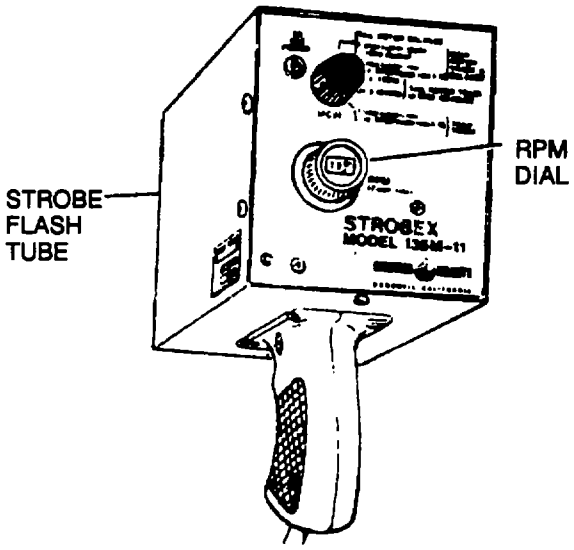

STROBEX TRACKER 135M11

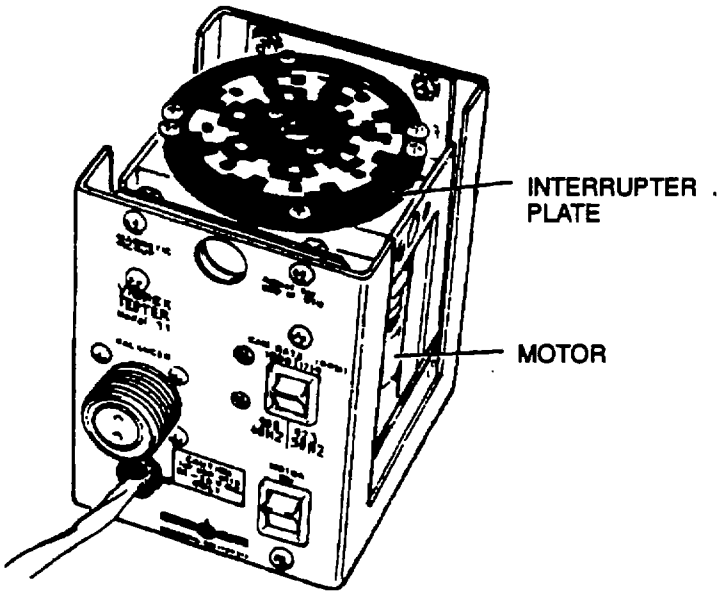

VIBREX TESTER 11

Figure 3-10. Electronic Blade Tracking Equipment

3-18. Rotor Blade Preservation and Storage. Accomplish the following requirements for rotor blade preservation and storage:

- Condemn, demilitarize, and dispose of locally any blade which has incurred nonrepairable damage.
- Tape all holes in the blade such as bullet damage, tree damage, or foreign object damage to protect the interior of the blade from moisture and corrosion.
- Thoroughly remove foreign matter from the entire exterior surface of blade with mild soap and water.
- Protect blade outboard eroded surfaces with a light coating of corrosion preventive or primer coating.
- Protect blade main bolt hole bushing, drag brace retention bolt hole bushing, and any exposed bare metal (i.e., grip and drag pads) with a light coating of corrosion preventive.
- Place barrier material (MIL-B-121, Grade A) shiny side next to blade at all locations where the blade will contact the hogs-hair container supports.
- Secure blade to shock-mounted support and secure container lid.
- Place properly completed DA Form 2410, Material condition tag DA Form 1577-2, and any other blade records in a waterproof bag and insert into container record tube.
- Obliterate old markings from the container which pertained to the original shipment or to the original item which it contained. Stencil blade NSN and serial number on container.

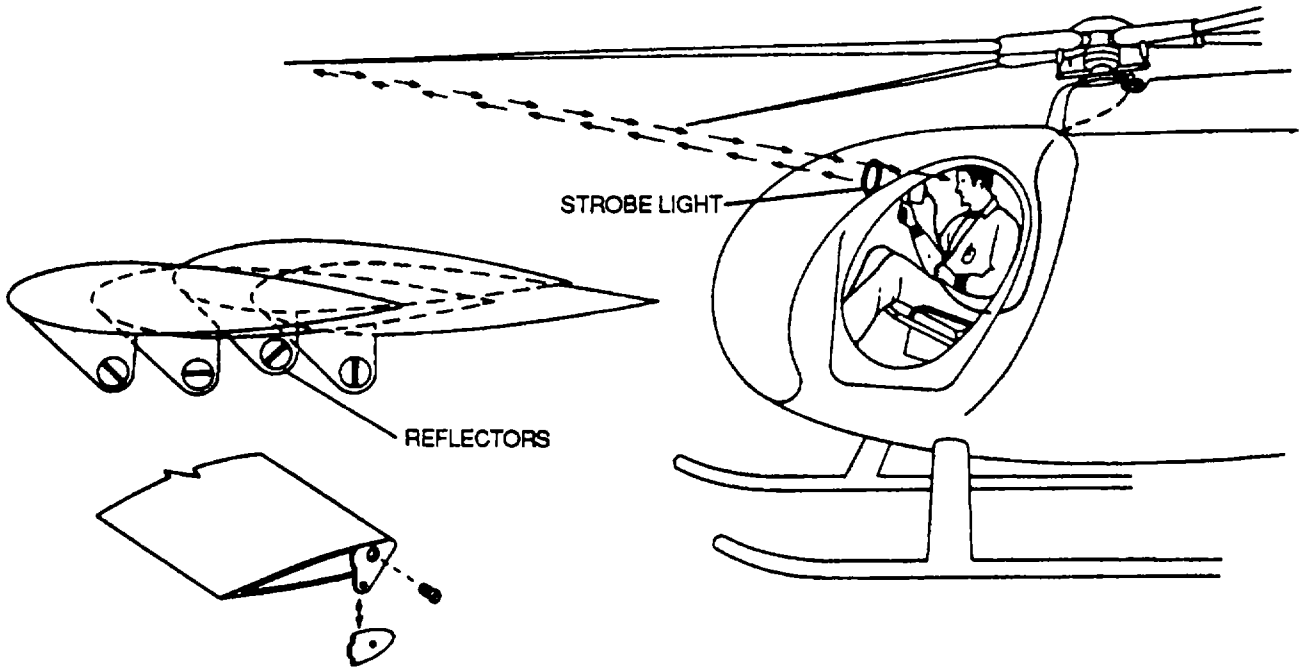

Figure 3-11. Reflector Blade Tracking

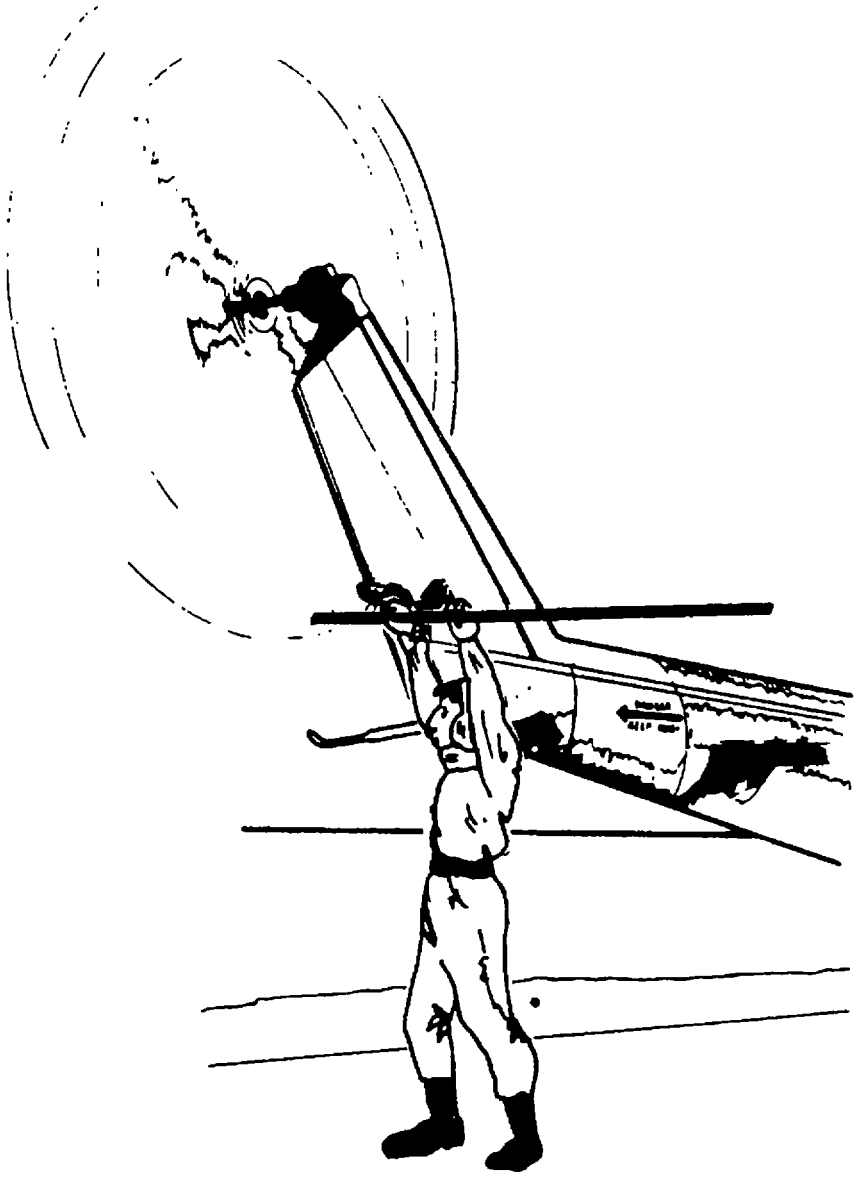

Figure 3-12. Tail Rotor Tracking

CHAPTER 4

POWERTRAIN MAINTENANCE PRACTICES AND PROCEDURES

4-1. General. The powertrain maintenance practices and procedures discussed in this chapter are representative of those in widespread use. No attempt has been made to include detailed maintenance procedures for a specific powertrain. Refer to the applicable maintenance manual for specific maintenance procedures.

4-2. General Shop Rules The practices and procedures described in this chapter pertain to the repair functions of aviation activities and are applicable to all levels of maintenance. Because of the many types of Army aircraft, each shop within the manufacturing and repair section must, of necessity, have personnel trained in general practices and procedures to the extent that different type and model aircraft do not upset a smooth running shop.

a Responsibility. All supervisory personnel in the manufacturing section are responsible for a continuing and effective shop safety program. To implement and maintain this program, shop supervisors shall utilize bulletin boards, signs, and any other effective method. Shop personnel shall cooperate in the shop safety program by making helpful recommendations, and continually exercising care and caution in the operation of all shop equipment. All shop personnel shall strive to improve the safety program and be especially alert to observe and correct hazardous conditions and unsafe shop practices. All accidents, no matter how minor, shall be reported to the shop supervisor, and all published instructions regarding safety shall be strictly adhered to. Also, safety engineers and safety officers shall ensure that proper safety procedures are adhered to in accordance with AR 385-10, The Army Safety Program; AR 385-30, Safety Color Code Markings and Signs; AR 385-32, Protective Clothing and Equipment; The Occupational Safety and Health Act of 1971, OSHA 1910. 251; all applicable fire codes, NFPA 410; and other accepted civilian and military safety practices.

b. Shop Housekeeping. Housekeeping is the yardstick by which the shops in the manufacturing section are judged. A clean, well-arranged shop is a safe shop and reflects credit on all personnel concerned with its operation. The following shop practices shall be observed:

(1) Oil pans or drip pans shall be used where leaking oil, grease, and similar materials may cause hazardous accumulations on equipment or floors. All spills shall be cleaned up immediately. Approved sweeping compound may be used to remove these materials from the floor.

CAUTION

Floors shall not be cleaned with volatile or flammable liquids. A flammable film may remain and cause a fire hazard.

(2) Floors shall be maintained smooth and clean, free of all obstructions and slippery substances. Holes and irregularities in floors shall be repaired to maintain a level surface free from tripping hazards.

(3) All unnecessary materials on walls shall be removed and projections shall be kept to a minimum.

(4) Aisles shall be dearly defined and kept free of hazardous obstructions. Where possible, aisles shall be suitably marked by painting.

(5) All machines, work benches, aisles, etc, shall be adequately illuminated.

c. Shop Safety. Unsafe equipment and fire hazards are the main factors to be observed while planning safety procedures.

(1) Equipment safety. Unsafe equipment shall be reported immediately. The following equipment safety practices shall be observed:

(a) Machines shall be located to provide operators with sufficient space to handle materials and perform job operations without interference.

(b) Bolt down all machinery that can move or walk due to vibration (drill press, bench grinder, etc.).

(c) Substantial low resistance conductors shall be used to ground all stationary and portable machines, equipment, or other devices in which static charges may be generated, or which, require electrical circuits of a hazardous nature.

(d) Shop machinery shall be operated only by qualified personnel observing safe practices.

(e) Safety devices, such as guards, interlocks, automatic releases, and stops, shall always be kept in operating condition.

(f) Ensure that all unauthorized personnel are clear of area before opening valves or energizing electrical circuits for starting machinery.

(g) Suitable mechanical guards, such as enclosures or barricades, shall be permanently installed on all machinery not already equipped with such to eliminate danger of injury from moving parts.

(h) Machinery shall not be adjusted, repaired, oiled, or cleaned while machine is in operation or power is on.

(i) Personnel operating machinery shall wear protective clothing as prescribed. A protective face shield or goggles shall be worn when operating a grinder regardless of whether grinder is equipped with attached shields.

(j) Jewelry shall not be worn while performing any maintenance.

(2) Fire safety. A constant vigilance shall be maintained to seek out fire hazards. Fire hazards are constantly present in the shop where sparks, friction, or careless handling can cause an explosion that may destroy equipment or buildings, and injure or kill personnel. Refer to AR 385-10, The Army Safety Program and the Occupational Safety and Health Act of 1971. The following fire safety practices shall be observed:

(a) NO SMOKING signs shall be placed in areas where smoking could create a fire hazard.

(b) Personnel shall be trained in the use, knowledge, and location of shop fire fighting equipment.

(c) Each shop shall be equipped with fire extinguishers suited for type of fire most likely to occur.

(d) Use correct fire extinguisher for class of fire as follows:

- Class A fire (wood, paper, trash, etc). Use water or soda-acid fire extinguisher.
- Class B fire (oil, paint, fuel, grease, etc). Use bromotrifluoromethane or carbon dioxide fire extinguisher.
- Class C fire (electrical equipment). Use bromotrifluoromethane or carbon dioxide fire extinguisher.
- Class D fire (combustible metals) magnesium, titanium, zirconium, sodium, lithium, and potassium. Use dry powder type fire extinguisher.

(e) Oily waste, rags, and similar combustible materials shall be discarded in self-closing metal containers which shall be emptied daily.

(f) Flammable materials shall not be stored in the shop.

(g) Use only approved cleaning solvents.

d. Shop Tools and Materials. Handling tools and materials require observance of the following common safety practices:

(1) Do not leave tools or objects in elevated positions from which they can fall or be knocked off.

(2) Do not point a compressed airstream toward any part of the body.

(3) All unserviceable tools shall be plainly marked and removed from service.

(4) Electrical cables and air hoses to portable units shall be laid out so there is no danger of tripping.

(5) Electrical tools shall be connected to a low resistance ground.

(6) Keep bench tops covered with material hard enough to prevent chips and other foreign material from becoming imbedded. Keep bench tops clean and free from chips and filings.

(7) Keep vise jaws covered with soft metal jaw caps.

e. Preservation of Aircraft Undergoing Maintenance. Aircraft undergoing AVUM/AVIM maintenance in a hangered environment shall not be considered to be in storage. Tasks applicable to short term storage shall be performed as necessary to prevent deterioration of the aircraft. Selection of the required tasks is at the discretion of the maintenance officer based on local conditions. Aircraft stored in an outside environment awaiting parts shall be preserved for the appropriate storage category as described above.

4-3. Powertrain. Powertrain systems for single rotor and tandem rotor helicopters are explained in the following paragraphs.

a. Single Rotor Powertrain. The single rotor powertrain consists of gearboxes, drive-shafts, and clutches. The system carries torque from the engines to the main and tail rotors. A typical single rotor powertrain system is shown in figure 4-1.

b. Tandem Rotor Powertrain. The tandem rotor powertrain delivers torque from the engines to both rotors. A typical tandem rotor powertrain is shown in figure 4-2.

4-4. Drive Components. The components that make up the power drive system are gearboxes, clutches, free-wheel units, engine cooling fans, rotor brakes, and drive shafting. Power drive components shall be serviced at normal operating oil temperature with the oil specified in the applicable aircraft maintenance manual.

a. Gearboxes. The gearbox is coupled to the engine by the main driveshaft and provides drive angle change and speed reduction to drive the main rotor mast, through a train of spiral bevel gears and two-stage planetary gears.

(1) Inspection. Refer to the applicable maintenance manual for specific inspection procedures. The following paragraphs contain general instructions for gearbox inspection.

(a) Oil contamination. When metal particles are found in oil or gearbox and are readily identified as fragments of gearbox parts, such as gears, nuts, bearings, slingers, thrust washers, snap rings, and lockwire, the gearbox shall be replaced in accordance with the applicable aircraft maintenance manual. If the gearbox has an external oil cooler, the oil cooler shall be replaced and the lines flushed.

(b) Identification of metal particles. When foreign substances are found and not readily identified, perform the serviceability check described in the following procedures:

1 Drain and flush gearbox with specified operating oil.

WARNING

Drycleaning solvent is flammable and solvent vapors are toxic. Use P-D-680, Type II Solvent in a well-ventilated area. Keep away from open flames. Avoid prolonged solvent contact with skin.

2 Remove, clean, and reinstall filter, finger screen, and magnetic plug. Clean with drycleaning solvent, Federal Specification P-D-680.

NOTE

When removing screen or filter, catch oil which comes from around screen and filter in a clean white cloth. Dip cloth and its contents into dry cleaning solvent, Federal Specification P-D-680. Examine foreign material found in cloth, as well as that adhering to screen, as a means of determining condition of gearbox.

3 Service gearbox, with grade and specification of oil specified in applicable aircraft maintenance manual.

4 Inspect gearbox after 5, 10, and 15 hours operation. If amount of particles has increased, remove gearbox for overhaul. If amount of particles has decreased, gearbox will be continued in service.

(c) Overspeed inspection. When a gear box has been subjected to overspeeding, it shall be inspected in accordance with the applicable aircraft inspection requirements manual.

(d) Sudden speed reduction inspection. When a sudden reduction in speed or sudden stoppage is encountered, gearbox shall be inspected or replaced as specified in the inspection requirements of applicable maintenance manual.

(e) Leaking seals. Inspect gearbox for leaking seals. Leaking seals can be replaced in some gearboxes. These seals shall be replaced as outlined in applicable maintenance manual. Damaged or leaking fittings will be replaced.

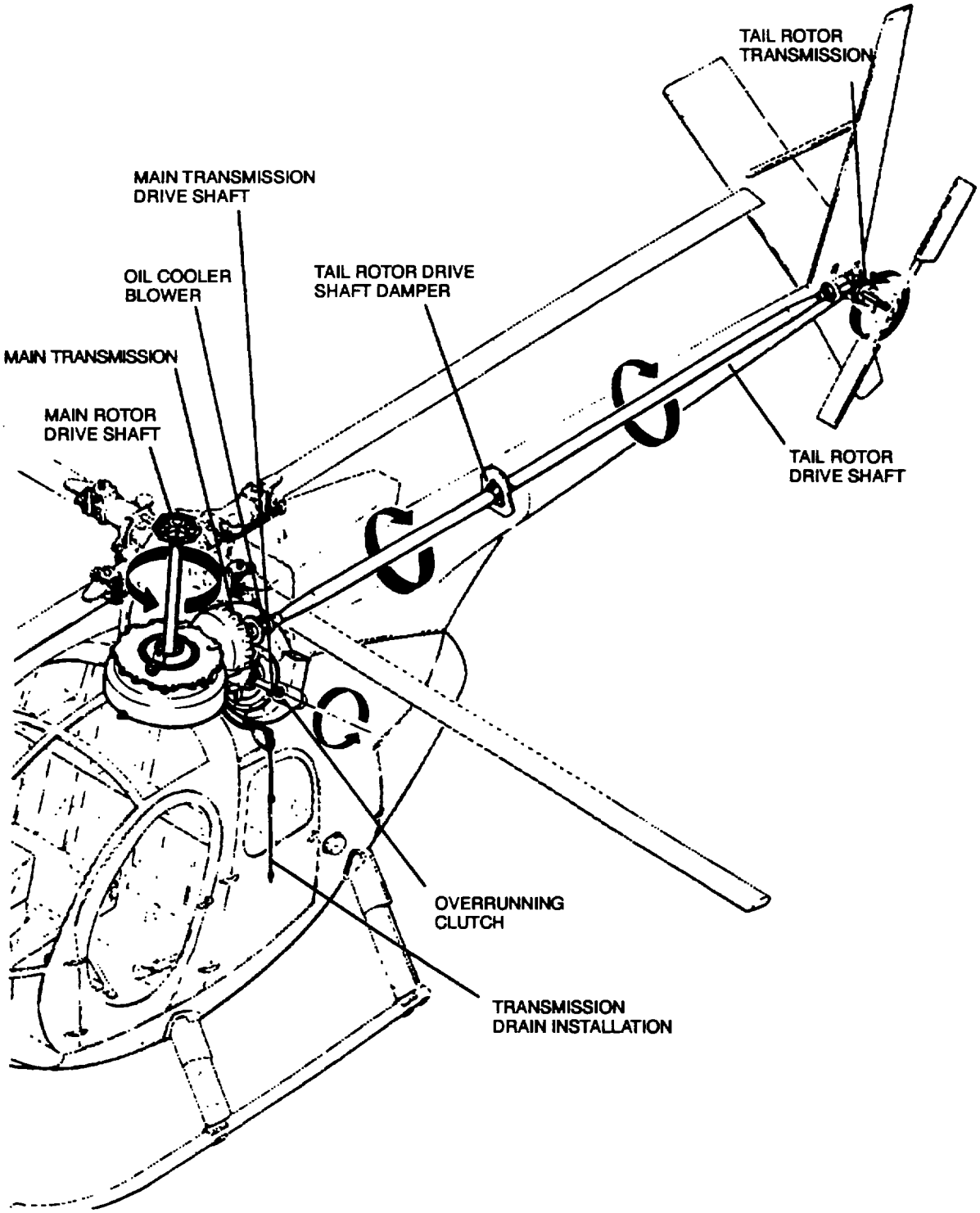

Figure 4-1. Single Rotor Powertrain

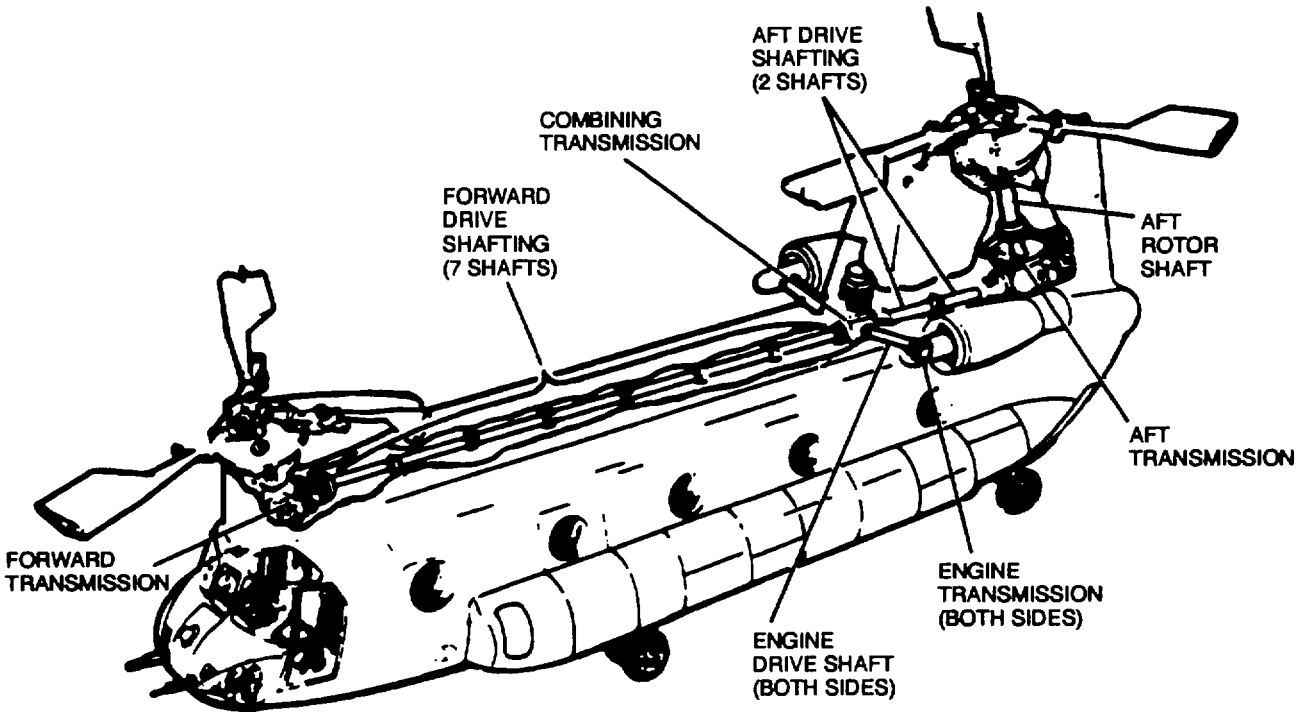

Figure 4-2. Tandem Rotor Powertrain

(f) Oil cooler inspection. Inspect gear box oil cooler in accordance with the applicable aircraft inspection requirements manual. Replace oil cooler assembly after gearbox failure and attach metal tag to cooler marked: REMOVED AFTER GEARBOX FAILURE, DECONTAMINATE AT SPECIFIED DEPOT.

(g) Accessory inspection. Gearbox accessories shall be inspected in accordance with the applicable aircraft inspection requirements manual. Damaged or worn gearbox accessories shall be replaced in accordance with instructions contained in applicable maintenance manual.

(2) Preservation for shipment. Use the following procedures to preserve gearboxes for shipment:

(a) Drain oil from gearbox.

(b) Plug all openings and fill gearbox with corrosion preventive, MIL-C-6529, Type II. Do not mix corrosion preventives and lubricating oils unless they are compatible.

(c) Rotate gears to accomplish internal sloshing required for preservation.

(d) Drain corrosion preventive mixture from gearbox.

(e) Coat all unprotected surfaces such as shafts with hard-film corrosion preventive compound, MIL-C-11796, and cover coated area with grease proof barrier material, MIL-B-121.

(f) Attach warning tag with following notation: GEARBOX PRESERVED. REFILL WITH PROPER LUBRICANT, FLUSH, DRAIN, AND REFILL WITH PROPER LUBRICANT BEFORE OPERATING.

(g) Pack gearbox securely in suitable shipping container.

(3) Depreservation. Depreserve gearboxes using the following procedures:

(a) Remove gearbox from shipping container, and remove grease proof paper and tape.

WARNING

Drycleaning solvent is flammable and solvent vapors are toxic. Use P-D-680, Type II Solvent in a well-ventilated area. Keep away from open flames. Avoid prolonged solvent contact with skin.

(b) Remove all external corrosion preventive compound from gearbox with drycleaning solvent, Federal Specification P-D-680.

(c) Flush gear box by filling with proper lubricant and draining. After flushing, refill with proper lubricant as specified in applicable maintenance manual.

b. Freewheeling Units. The freewheeling coupling provides for autorotative capabilities by automatically disconnecting the rotor system from the engine when the engine stops or slows below the equivalent of rotor rpm. When the engine is disconnected from the rotor system through the automatic action of the freewheeling coupling, the transmission continues to rotate with the main rotor thereby enabling the tail rotor to continue turning at its normal rate. This permits the pilot to maintain directional control during autorotation. Replace any parts that show evidence of failure or excessive wear. Check for proper operation prior to each flight as specified in the inspection requirements of the applicable maintenance manual.

c. Deleted.

d Rotor Brakes. Replace and repair rotor brakes in accordance with the applicable maintenance manual.

e. Drive Shafting. Maintenance for drive shaft components is explained in the following paragraphs.

(1) Drive shafts. Replace bent, cracked, broken, or excessively scored or scratched drive shafts as outlined in the applicable maintenance manual.

(2) Bearings. Replace bearings as outlined in the applicable maintenance manual.

(3) Couplings. Replace deteriorated or damaged couplings as outlined in the applicable maintenance manual.

(4) Overspeed, sudden reduction in speed, or sudden stoppage. Replace or inspect parts as specified in the inspection requirements of the applicable maintenance manual.

(5) Lubrication. Lubricate universal joints, slip joints, and drive shaft bearings according to requirements given in the lubrication chart of applicable maintenance manual.

(6) Alignment. Align all drive shafting as outlined in the applicable maintenance manual.

45. Cleaning of Powertrain Components. Powertrain component cleaning is described in the following paragraphs.

WARNING

Drycleaning solvent is flammable and solvent vapors are toxic. Use P-D-680, Type II Solvent in a well-ventilated area. Keep away from open flames. Avoid prolonged solvent contact with skin.

a Gearboxes. The oil system shall be drained and flushed with clean oil as specified in the applicable maintenance manual.

b. Oil Lines. Lines that cannot be cleaned while installed shall be removed for cleaning. Flush oil lines with specified operating oil.

c. Oil Filters. Oil filters shall be removed and cleaned with drycleaning solvent, Federal Specification P-D-680.

d. Oil Screens. Oil screens will be immersed in drycleaning solvent, Federal Specification P-D-680, Type II, and washed with a soft bristled brush. Blow out residual dirt and fluid with light air blast directed into inside of screen. When heavy carbon deposits adhere to screen, immerse screen in stabilized degreasing fluid, trichlorethylene, Federal Specification O-T-634, at room temperature. Dry with light air blast.

CAUTION

Do not use a hard edged or pointed tool to scrape or pick at screen. Compressed air shall not be used for cleaning purposes except if reduced to less than 30 psi and then only with effective chip-guarding and personal protective equipment.

e. Valves. Replace oil cooler regulator valves when system is contaminated with metal particles. All other oil system valves will be removed, cleaned with drycleaning solvent, Federal Specification P-D-680, and reinstalled.

f. Oil Pumps. Clean oil pumps with specified operating oil.

g. Oil Coolers. Flush oil coolers with specified operating oil.

h. Clutches. Wipe with a clean cloth.

i. Freewheeling Units. Clean with drycleaning solvent, Federal Specification P-D-680, and apply a light coat of specified operating oil.

j. Engine Cooling Fans. Clean fans with a cloth dampened in drycleaning solvent, Federal Specification P-D-680.

k. Rotor Brakes. Wipe with a clean cloth.

l. Drive Shafting. Wipe with a clean cloth dampened in drycleaning solvent, Federal Specification P-D-680.

APPENDIX A

REFERENCES

A-1. ARMY REGULATIONS (AR):

AR 385-10	Army Safety Program
AR 385-30	Safety Color Code Markings and Signs
AR 385-32	Protective Clothing and Equipment

A-2 TECHNICAL MANUALS (TM):

TM 1-1500-204-23-6	Aviation Unit Maintenance (AVUM) and Aviation Intermediate Maintenance (AVIM) Manual for General Aircraft Maintenance (Hardware and Consumable Materials) Volume 6
TM 55-1500-345-23	Painting and Marking of Army Aircraft
TM 55-4920-402-13&P	Operator's Aviation Unit and Intermediate Maintenance Manual (Including Repair Parts and Special Tools Lists) for Vibrex Balancing Kit, Part No. B4591 (NSN 4920-01-040-7816)

A-3 LEGAL AND CONSENSUS STANDARDS:

NFPA 410	Standard on Aircraft Maintenance
OSHA 1910.251	The Occupational Safety and Health Act of 1971

A-4 MILITARY SPECIFICATIONS:

MIL-A-8625	Anodic Coatings for Aluminum and Aluminum Alloys

A-5 DEPARTMENT OF DEFENSE(DD) FORM:

DD 1577-2	Unserviceable (Repairable) Tag-Materiel

A-6 DEPARTMENT OF THE ARMY (DA) FORM:

DA Form 2410	Component Removal and Repair/Overhaul Record

GLOSSARY

BRAKE HORSEPOWER -	The actual horsepower delivered by an engine to a propeller or other driven device.
COLD-WORKING -	A mechanical working of metal performed at temperatures below the critical range.
FEATHERING -	Rotating the blades of a propeller to an edge-to-the-wind position for the purpose of stopping the rotating of the propeller and reducing drag.
PITCH -	Motion around the lateral axis.
ROLL -	Motion around the longitudinal axis.
THRUST HORSEPOWER -	The actual amount of horsepower that is transformed into thrust.
TORQUE-	A force or combination of forces that tend to produce a rotating or turning motion.
YAW	Motion around the vertical axis.

INDEX

Subject	Paragraph Figure, Table Number
A	
Aerodynamic Balancing	2-11 b
Alignment, Rotor Blade	3-14
Angle of Bend, Measuring	F2-6
Anti-Icing	2-15b
Anti-Icing System, Typical	F2-12
B	
Balance (of Tail Rotor Blades)	3-9c
Balance Check Three-Blade	F2-8
Balance Check, Two-Blade	F2-7
Balance, Blade	3-10
Balancing, Propeller	2-11
Bends and Twists	2-10c
Blade Balance	3-10
General	3-10a
Mass Balance Weights (Bars)	3-10b
Spanwise Balance Weights	3-10c
Tracking Weights	3-10d
Trim Tabs	3-10e
Blade Classification Data (Main Rotor Blades)	3 -7d
Blade Construction (Main Rotor Blades)	3-7c
Blade Designation, Propeller Model and	2-4
Blade Flapping Action (Vertical Plane)	F3-7
Blade Leading and Lagging (Horizontal Plane)	F3-8
Blade Tracking	2-11d
Blade Tracking, Electronic, Equipment	F3-10
Blade Tracking, Reflector	F3-11
Blade, Rotor, Repair	3-12
Blade, Rotor, Tracking	3-17, F3-9
C	
Cleaning, Powertrain Components of	4-5
Clutches	4-51
Collective Pitch Control	3-5b, F3-5
Components, Drive	4-4
Configurations, Helicopter	3-4
Construction (of Tail Rotor Blades)	3-9b
Consumable Materials	1-3
Control System, Helicopter	F3-1
Cyclic Pitch Control	3-5a, F3-4

INDEX - CONT

Subject	Paragraph Figure, Table Number
D	
Damaged Square Tip Repair	F2-5
Damaged Tip Repair	F2-4
Defects, Propeller	2-7 T2-2
Deicing	2-15c
Drive Components	4-4
Drive Shafting	4-4e
Freewheeling Units	4-4b
Gearboxes	4-4a
Rotor Brakes	4-4d
Drive Shafting	4-4e, 4-5l
Dynamic Balancing	2-11c
E	
Efficiency, Engine	2-6
Efficiency, Propeller	2-5
Electrical Deicing System, Typical	F2-13
Electronic Blade Tracker	3-17b
Electronic Blade Tracking Equipment	F3-10
Engine Cooling Fans	4-5j
Engine Efficiency	2-6
Mechanical Efficiency	2-6a
Thermal Efficiency	2-6b
Volumetric Efficiency	2-6c
Extremely Low Frequency Vibration	3-16a
F	
Fiberglass Blade Repair	3-12b
Flight Controls, Helicopter	3-5
Flag and Pole	3-17a
Flapping Action, Blade (Vertical Plane)	F3-7
Freewheeling Units	4-5i
Fully Articulated Rotor	3-6b
Fully Articulated Rotor Head	F3-6

INDEX - CONT

Subject	Paragraph Figure, Table Number
G	
Gearboxes	4-4a, 4-5a
General (Blade Balance)	3-10a
General (Tail Rotor Hubs)	3-8a
General Shop Rules	2-2,3-2, 4-2
Responsibility	2-2a, 3-2a 4-2a
Shop Housekeeping	2-2b, 3-2b, 4-2b
Shop Safety	2-2c, 3-2c 4-2c
Shop Tools and Materials	2-2d, 3-2d, 4-2d
General, Powertrain Maintenance Practices and Procedures	4-1
General, Propeller Maintenance Practices and Procedures	2-1
General, Rotor Maintenance Practices and Procedures	3-1
Governed Propellers, Rigging	2-14
Governor, Woodward	F2-10
Governors, Propellers	2-13
H	
Hartzell Constant-Speed Propeller	F2-2, 2-4a
Hartzell Pitch Change Mechanism	F2-1
Helicopter Configurations	3-4
Single Rotor	3-4a
Tandem Rotor	3-4b
Helicopter Control System	F3-1
Helicopter Flight Controls	3-5
Collective Pitch Control	3-5b
Cyclic Pitch Control	3-5a
Swashplate	3-5c
Throttle Control	3-5d
Torque Control	3-5e
Helicopter Vibration Types	T3-2
Helicopter Vibrations	3-16
Extreme Low Frequency Vibration	3-16a
High Frequency Vibration	3-16d
Low Frequency Vibration	3-16b
Medium Frequency Vibration	3-16c
I	
Icing, Propeller	2-15
Icing Types	2-15a

INDEX - CONT

Subject	Paragraph Figure, Table Number
I - Continued	
Installation (of Governors)	2-14b
Installation, Propeller	2-12
Integrated Oil Control Assembly	2-13f
L	
Low Frequency Vibration	3-16b
M	
Main Rotor Assemblies	3-6
Fully Articulated Rotor	3-6b
Semi-Rigid Rotor	3-6a
Main Rotor Blade Terms	T3-1
Main Rotor Blades	3-7
Blade Classification Data	3-7d
Blade Construction	3-7c
Nomenclature	3-7b
Types	3-7a
Main Rotor Painting	3-13a
Mass Balance Weights (Bars)	3-10b
Materials, Consumable	1-3
Measuring Angle of Bend	F2-6
Mechanical Efficiency	2-6a
Medium Frequency Vibration	3-16c
Metal Blade Repair	3-12a
Minor Defects (in Propellers)	2-10a
Model Designation (Propeller Governors)	2-13b
Model Number, Propeller	T2-1
N	
Nomenclature (for Main Rotor Blades)	3-7b
O	
Oil Control Plugging	2-14a
Oil Coolers	4-5g

INDEX - CONT

Subject	Paragraph Figure, Table Number
O - Continued	
Oil Filters	4-5c
Oil Lines	4-5b
Oil Pumps	4-5f
Oil Screens	4-5d
Operation Checks (of Governors)	2-14d
P	
Painting, Rotor Blade	3-13
Pitch Change Mechanism, Hartzell	F2-1
Pitch Control, Collective	F3-5
Pitch Control, Cyclic	F3-4
Powertrain	4-3
Single Rotor Powertrain	4-3a
Tandem Rotor Powertrain	4-3b
Powertrain Maintenance Practices and Procedures (General)	4-1
Powertrain, Single Rotor	4-3a, F4-1
Powertrain, Tandem Rotor	4-3b, F4-2
Preservation and Storage, Propeller	2-16
Preservation and Storage, Rotor Blade	3-18
Principles of Operation and Design Features of Rotor Systems	3-3
Procedures, Troubleshooting (Propeller System)	2-8
Procedures, Troubleshooting (Rotor Systems)	3-15
Propeller Balancing	2-11
Aerodynamic Balancing	2-11 b
Blade Tracking	2-11d
Dynamic Balancing	2-11c
Static Balancing	2-11 a
Propeller Blades	2-16b
Propeller Cleaning	2-9b
Propeller Defects	2-7, T2-2
Propeller Efficiency	2-5
Propeller Governors	2-13
Integrated Oil Control Assembly	2-13f
Model Description	2-13b
Principles of Operation	2-13a
Single Capacity Governors	2-13c

INDEX - CONT

Subject	Paragraph Figure, Table Number
P - Continued	
Turbo Prop Overspeed Governors	2-13e
Turbo Prop Governors	2-13f
Propeller Hub and Dome Assembly	2-16a
Propeller Icing	2-15
Anti-icing	2-15b
Deicing	2-15c
Icing Types	2-15a
Propeller Inspection	2-9c
Propeller Installation	2-12
Propeller Maintenance Practices and Procedures	2-1
Propeller Model and Blade Designation	2-4
Propeller Model Number	T2-1
Propeller Preservation and Storage	2-16
Propeller Removal	2-9a
Propeller Removal, Cleaning and Inspection	2-9
Propeller Cleaning	2-9b
Propeller Inspection	2-9c
Propeller Removal	2-9a
Propeller Repair	2-10
Bends and Twists	2-10c
Minor Defects	2-10a
Tip Damage	2-10b
Propeller RPM Adjusting Screw	F2-11
Propeller Theory	2-3
Propeller Tracking	F2-9
Purpose (of Manual)	1-1
R	
Refinishing (Rotor Blades)	3-13c
Reflector Blade Tracking	F3-11
Repair of Surface Defects (Propeller)	F2-3
Repair, Propeller	2-10
Responsibility (for General Shop Rules)	2-2a, 3-2a, 4-2a
Rigging (of Governors)	2-14c
Rigging Governed Propellers	2-14
Installation	2-14b
Oil Control Plugging	2-14a
Operation Checks	2-14d
Rigging	2-14c

INDEX - CONT

Subject	Paragraph Figure, Table Number
R - Continued	
Rigid Rotor	3-6a
Rotor Assemblies, Main	3-6
Rotor Blade Alignment	3-14
String Method	3-14b
Telescopic Method	3-14a
Rotor Blade Painting	3-13
Main Rotor Painting	3-13a
Refinishing	3-13c
Spot Painting	3-13b
Rotor Blade Preservation and Storage	3-18
Rotor Blade Repair	3-12
Fiberglass Blade Repair	3-12b
Metal Blade Repair	3-12a
Rotor Blade Tracking	3-17, F3-9
Electronic Blade Tracker	3-17b
Flag and Pole	3-17a
Tail Rotor Tracking	3-17c
Rotor Brakes	4-4d, 4-5k
Rotor Maintenance Practices and Procedures, General	3-1
Rotor Removal, Cleaning, and Inspection	3-11
Rotor Systems, Principles of Operation and Design Features of	3-3
Rotor, Fully Articulated, Head	F3-6
Rotor, Main, Blades	3-7
Rotor, Single, Configuration	F3-2
Rotor, Tail, Blades	3-9
Rotor, Tail, Hubs	3-8
Rotor, Tandem, Configuration	F3-3
RPM Adjusting Screw Propeller	F2-11
S	
Scope (of Manual)	1-2
Semi-Rigid Rotor	3-6b
Shop Housekeeping	2-2b, 3-2b, 4-2b
Shop Rules, General	2-2, 3-2, 4-2

INDEX- CONT

Subject	Paragraph Figure, Table Number
S - Continued	
Shop Safety	2-2c, 3-2c, 4-2c
Shop Tools and Materials	2-2d, 3-2d, 4-2d
Single Capacity Governors	2-13c
Single Rotor	3-4a
Single Rotor Configuration	F3-2
Spanwise Balance Weights	3-10c
Spot Painting (Rotors)	3-13b
Square Tip, Damaged, Repair	F2-5
Static Balancing	2-11 a
String Method	3-14b
Surface Defects (Propeller), Repair of	F2-3
Swashplate	3-5c
T	
Tail Rotor Blades	3-9
Balance	3-9b
Construction	3-9b
Trammeling	3-9d
Types	3-9a
Tail Rotor Hubs	3-8
General	3-8a
Types	3-8b
Tail Rotor Tracking	3-17c, F3-12
Tandem Rotor	3-4b
Tandem Rotor Configuration	F3-3
Telescopic Method	3-14a
Terms, Main Rotor Blade	T3-1
Theory, Propeller	2-3
Thermal Efficiency	2-6b
Three-Blade Balance Check	F2-8
Throttle Control	3-5d
Tip Damage	2-10b
Tip, Damaged, Repair	F2-4
Torque Control	3-5e
Tracking Weights	3-10d
Tracking, Propeller	F2-9
Tracking, Tail Rotor	F3-12

INDEX- CONT

Subject	Paragraph Figure, Table Number
T - Continued	
Trammeling (of Tail Rotor Blades)	3-9d
Trim Tabs	3-10e
Troubleshooting Procedures (Propeller System)	2-8
Troubleshooting Procedures (Rotor Systems)	3-15
Turbo Prop Overspeed Governors	2-13e
Turbo Prop Governors	2-13d
Two-Blade Balance Check	F2-7
Types (of Main Rotor Blades)	3-7a
Types (of Tail Rotor Blades)	3-9a
Types (of Tail Rotor Hubs)	3-8b
Typical Anti-Icing System	F2-12
Typical Electrical Deicing System	F2-13
V	
Valves	4-5e
Vibrations, Helicopter	3-16
Volumetric Efficiency	2-6c
W	
Woodward Governor	F2-10

*US GOVERNMENT PRINTING OFFICE: 1996-755-625/46667

By Order of the Secretary of the Army:

GORDON R. SULLIVAN
General, United States Army
Chief of Staff

Official:

MILTON H. HAMILTON
Administrative Assistant to the
Secretary of the Army
06311

Distribution:

To be distributed in accordance with DA Form 12-31-E, block no. 3226, AVUM and AVIM maintenance requirements for TM 1-1500-204-23-5.

☆ U.S. GOVERNMENT PRINTING OFFICE: 1995 - 395-240

RECOMMENDED CHANGES TO EQUIPMENT TECHNICAL PUBLICATIONS

THEN . .JOT DOWN THE DOPE ABOUT IT ON THIS FORM, CAREFULLY TEAR IT OUT, FOLD IT AND DROP IT IN THE MAIL!

SOMETHING WRONG WITH THIS PUBLICATION?

FROM: (PRINT YOUR UNIT'S COMPLETE ADDRESS)
PFC John DOE
CO A 3rd Engineer Bn
Ft. Leonardwood, MO 63108

DATE SENT 22 August 1992

PUBLICATION NUMBER	PUBLICATION DATE	PUBLICATION TITLE
TM 1-1520-250-10	15 June 1992	Operator's manual MH60K Helicopter

BE EXACT PIN–POINT WHERE IT IS

PAGE NO	PARA-GRAPH	FIGURE NO	TABLE NO
6	2-1 a		
B1		4-3	

IN THIS SPACE, TELL WHAT IS WRONG AND WHAT SHOULD BE DONE ABOUT IT:

In line 6 of paragraph 2–1a the manual states the engine has 6 cylinders. The engine on my set only has 4 cylinders. Change the manual to show 4 cylinders.

Callout 16 on figure 4–3 is pointed at a bolt. In key to figure 4–3, item 16 is calle a shim. Please correct one or the other

EXAMPLE

PRINTED NAME, GRADE OR TITLE, AND TELEPHONE NUMBER

JOHN DOE, PFC (268) 317–7111

SIGN HERE

JOHN DOE John Doe

DA FORM 1 JUL 79 2028–2

PREVIOUS EDITIONS ARE OBSOLETE.

DRSTS-M verprint2, 1 Nov 80

P.S.- - IF YOUR OUTFIT WANTS TO KNOW ABOUT YOUR RECOMMENDATION, MAKE A CARBON COPY OF THIS AND GIVE TO YOUR HEADQUARTERS.

REVERSE OF DA FORM 2028–2 Reverse of DRSTS-M Overprint 2,
1 Nov 80

TEAR ALONG PERFORATED LINE

FILL IN YOUR
UNITS ADDRESS

FOLD BACK

DEPARTMENT OF THE ARMY

OFFICIAL BUSINESS

COMMANDER
U.S. ARMY AVIATION AND MISSILE COMMAND
ATTN: AMSAM-MMC-LS-LP
REDSTONE ARSENAL, AL 35898-5230

RECOMMENDED CHANGES TO EQUIPMENT TECHNICAL PUBLICATIONS

THEN . .JOT DOWN THE DOPE ABOUT IT ON THIS FORM, CAREFULLY TEAR IT OUT, FOLD IT AND DROP IT IN THE MAIL!

SOMETHING WRONG WITH THIS PUBLICATION?

FROM: (PRINT YOUR UNIT'S COMPLETE ADDRESS)

DATE SENT

PUBLICATION NUMBER	PUBLICATION DATE	PUBLICATION TITLE

BE EXACT PIN–POINT WHERE IT IS

PAGE NO	PARA-GRAPH	FIGURE NO	TABLE NO

IN THIS SPACE, TELL WHAT IS WRONG AND WHAT SHOULD BE DONE ABOUT IT:

PRINTED NAME, GRADE OR TITLE, AND TELEPHONE NUMBER	SIGN HERE

DA FORM 1 JUL 79 2028–2

PREVIOUS EDITIONS ARE OBSOLETE.

DRSTS-M verprint2, 1 Nov 80

P.S.- - IF YOUR OUTFIT WANTS TO KNOW ABOUT YOUR RECOMMENDATION, MAKE A CARBON COPY OF THIS AND GIVE TO YOUR HEADQUARTERS.

REVERSE OF DA FORM 2028–2 Reverse of DRSTS-M Overprint 2,
1 Nov 80

TEAR ALONG PERFORATED LINE

FILL IN YOUR
UNITS ADDRESS

FOLD BACK

DEPARTMENT OF THE ARMY

OFFICIAL BUSINESS

COMMANDER
U.S. ARMY AVIATION AND MISSILE COMMAND
ATTN: AMSAM-MMC-LS-LP
REDSTONE ARSENAL, AL 35898-5230

THE METRIC SYSTEM AND EQUIVALENTS

Linear Measure

1 centimeter = 10 millimeters = .39 inch
1 decimeter = 10 centimeters = 3.94 inches
1 meter = 10 decimeters = 39.37 inches
1 dekameter = 10 meters = 32.8 feet
1 hectometer = 10 dekameters = 328.08 feet
1 kilometer = 10 hectometers = 3.2808.8 feet

Weights

1 centigram = 10 milligrams = .15 grain
1 decigram = 10 centigrams = 1.54 grains
1 gram = 10 decigram = .035 ounce
1 dekagram = 10 grams = .35 ounce
1 hectogram = 10 dekagrams = 3.52 ounces
1 kilogram = 10 hectograms = 2.2 pounds
1 quintal = 100 kilograms = 220.46 pounds
1 metric ton = 10 quintals = 1.1 short tons

Cubic Measure

1 cu. centimeter = 1000 cu. millimeters = .06 cu. inch
1 cu. decimeter = 1000 cu. centimeters = 61.02 cu in.
1 cu. meter = 1000 cu. decimeters = 35.31 cu. feet

Square measure

1 sq. centimeter = 100 sq. millimeters =.155 sq. in.
1 sq. decimeter = 100 sq. centimeters = 15.5 inches
1 sq. meter (centare) = 100 sq. decimeters = 10.76 feet
1 sq. dekameter (are) = 100 sq. meters = 1.076.4 sq. ft.
1 sq. hectometer (hectare) = 100 sq. dekameters = 2.47 acres
1 sq. kilometer = 100 hectometers = .386 sq. miles

Liquid Measure

1 dekaliter = 10 liters = 2.64 gallons
1 hectoliter = 10 dekaliters = 26.42 gallons
1 kiloliter = 10 hectoliters = 264.18 gallons
1 liter = 10 deciliters = 33.81 fl. ounces
1 centiliter = 10 milliliters = .34 fl. ounce
1 deciliter = 10 centiliters = 3 38 fl. ounces
1 metric ton = 10 quintals = 1.1 short tons

Approximate Conversion Factors

To change	To	Multiply by
inches	centimeters	2.540
feet	meters	.305
yards	meters	.914
miles	kilometers	1.609
sq. inches	sq. centimeters	6.451
sq. feet	sq. meters	.093
sq. yards	sq. meters	.836
sq. miles	sq. kilometers	2.590
acres	sq. hectometers	.405
cubic feet	cubic meters	.028
cubic yards	cubic meters	.765
fluid ounces	milliliters	29.573
pints	liters	.472
quarts	liters	.946
gallons	liters	3.785
ounces	grams	28.349
pounds	kilograms	.454
short tons	metric tons	.907
pound inches	newton-meters	.11296

To change	To	Multiply by
ounce inches	newton-meters	.0070062
centimeters	inches	.394
meters	feet	3.280
meters	yards	1.094
kilometers	miles	.621
sq. centimeters	sq. inches	.155
sq. meters	sq. yards	10.764
sq. kilometers	sq. miles	1.196
sq. hectometers	acres	2.471
cubic meters	cubic feet	35.315
milliliters	fluid ounces	.034
liters	pints	2.113
liters	quarts	1.057
grams	ounces	.035
kilograms	pounds	2.205
metric tons	short tons	1.102
pound-feet	newton-meters	1.356

Temperature (Exact)

°F Fahrenheit temperature — 5/9 (after subtracting 32) — Celsius Temperature °C

PIN: 070441-000