TECHNICAL MANUAL

AVIATION UNIT MAINTENANCE (AVUM)

AND

AVIATION INTERMEDIATE MAINTENANCE (AVIM)

MANUAL

for

GENERAL AIRCRAFT MAINTENANCE

(ELECTRICAL AND INSTRUMENT MAINTENANCE

PROCEDURES AND PRACTICES)

VOLUME 4

*This manual together with TM 1-1500-204-23-l through TM1-1500-204-23-3 and TM l-l 500-204-23-5 through TM 1-1500-204-23-10, dated 31 July 1992, supersedes TM 55-1500-204-25/1, dated 6 April 1970, including all changes.

DISTRIBUTION STATEMENT A: **Approved for public release; distribution is unlimited.**

HEADQUARTERS, DEPARTMENT OF THE ARMY

31 JULY 1992

CHANGE

NO. 4

HEADQUARTERS
DEPARTMENT OF THE ARMY
WASHINGTON, DC 30 July 1999

AVIATION UNIT MAINTENANCE (AVUM)

AND

AVIATION INTERMEDIATE MAINTENANCE (AVIM) MANUAL

for

GENERAL AIRCRAFT MAINTENANCE

(ELECTRICAL AND INSTRUMENT MAINTENANCE

PROCEDURES AND PRACTICES)

VOLUME 4

DISTRIBUTION STATEMENT A: Approved for public release; distribution is unlimited.

TM 1-1500-204-23-4, dated 31 July 1992, is changed as follows:

1. Remove and insert pages as indicated below. New or changed text material is indicated by a vertical bar in the margin. An illustration change is indicated by a miniature pointing hand.

Remove pages	Insert pages
---	A / (B blank)
i / (ii blank)	i / (ii blank)
4-21 and 4-22	4-21 and 4-22
Index 3 thru Index 6	Index 3 thru Index 6
Cover	Cover

2. Retain this sheet in front of manual for reference purposes.

By Order of the Secretary of the Army:

ERIC K. SHINSEKI
General, United States Army
Chief of Staff

Official:

JOEL B. HUDSON
Administrative Assistant to the
Secretary *of the Army*
9916617

DISTRIBUTION:

To be distributed in accordance with Initial Distribution Number (IDN) 313302, requirements for TM1-1500-204-23-4.

CHANGE

NO. 3

HEADQUARTERS
DEPARTMENT OF THE ARMY
WASHINGTON, D.C., 30 April 1996

AVIATION UNIT MAINTENANCE (AVUM)
AND
AVIATION INTERMEDIATE MAINTENANCE (AVIM) MANUAL
FOR
GENERAL AIRCRAFT MAINTENANCE
(ELECTRICAL AND INSTRUMENT MAINTENANCE
PROCEDURES AND PRACTICES)

DISTRIBUTION STATEMENT A: Approved for public release; distribution is unlimited

TM 1-1500-204-23-4, dated 31 July 1992, is changed as follows:

1. Remove and insert pages as indicated below. New or changed text material is indicated by a vertical bar in the margin. An illustration change is indicated by a miniature pointing hand.

Remove pages	Insert pages
i/(ii blank)	i/(ii blank)
2-1 and 2-2	2-1 and 2-2
3-3 through 3-6	3-3 through 3-6
3-9 and 3-10	3-9 and 3-10
3-13 through 3-18	3-13 through 3-18
4-3 and 4-4	4-3 and 4-4
4-7 and 4-8	4-7 and 4-8
4-15 through 4-18	4-15 through 4-18
4-21 through 4-24	4-21 through 4-24
A-1/(A-2 blank)	A-1/(A-2 blank)
Index 1 through Index 9/(Index 10 blank)	Index 1 through Index 9/(Index 10 blank)

2. Retain this sheet in front of manual for reference purposes.

By Order of the Secretary of the Army:

DENNIS J. REIMER
General United States Army
Chief of Staff

Official:

JOEL B. HUDSON
Acting Administrative Assistant to the
Secretary of the Army
01628

To be distributed in accordance with DA Form 12-31-E, block no. 3302, requirements for TM 1-1500-204

☆U.S. GOVERNMENT PRINTING OFFICE: 1996 - 710-115/40131

URGENT

CHANGE

NO. 2

HEADQUARTERS
DEPARTMENT OF THE ARMY
WASHINGTON, D.C., 29 JULY 1993

AVIATION UNIT MAINTENANCE (AVUM)
AND
AVIATION INTERMEDIATE MAINTENANCE (AVIM) MANUAL
FOR
GENERAL AIRCRAFT MAINTENANCE

(ELECTRICAL AND INSTRUMENT MAINTENANCE PROCEDURES AND PRACTICES)

VOLUME 4

DISTRIBUTION STATEMENT A: Approved for public release; distribution is unlimited.

TM 1-1500-204-23-4, 31 July 1992, is changed as follows:

1. Remove and insert pages as indicated below. New or changed text material is indicated by a vertical bar in the margin. An illustration change is indicated by a miniature pointing hand.

Remove pages	Insert pages
3-13 and 3-14	3-13 and 3-14
4-21 and 4-22	4-21 and 4-22
Index 3 through Index 8	Index 3 through Index 8

2. Retain this sheet in front of manual for reference purposes.

By Order of the Secretary of the Army:

GORDON R. SULLIVAN
General, United States Army
Chief of Staff

Official:

MILTON H. HAMILTON
Administrative Assistant to the
Secretary of the Army
04900

DISTRIBUTION:

To be distributed in accordance with DA Form 12-31-E, block no. 3302, requirements for TM 1-1500-204-23-4.

CHANGE

NO. 1

HEADQUARTERS
DEPARTMENT OF THE ARMY
WASHINGTON, D.C., 28 MAY 1993

AVIATION UNIT MAINTENANCE (AVUM)
AND
AVIATION INTERMEDIATE MAINTENANCE (AVIM) MANUAL
FOR
GENERAL AIRCRAFT MAINTENANCE

(ELECTRICAL AND INSTRUMENT MAINTENANCE PROCEDURES AND PRACTICES)

VOLUME 4

DISTRIBUTION STATEMENT A: Approved for public release; distribution is unlimited.

TM 1-1500-204-23-4, 31 July 1992, is changed as follows:

1. Remove and insert pages as indicated below. New or changed text material is indicated by a vertical bar in the margin. An illustration change is indicated by a miniature pointing hand.

Remove pages	Insert pages
i/(ii blank)	i/(ii blank)
4-19 and 4-20	4-19 and 4-20

2. Retain this sheet in front of manual for reference purposes.

By Order of the Secretary of the Army:

GORDON R. SULLIVAN
General, United States Army
Chief of Staff

Official:

MILTON H. HAMILTON
Administrative Assistant to the
Secretary of the Army
04409

DISTRIBUTION:

To be distributed in accordance with DA Form 12-31-E, block no. 3226, requirements for TM 1-1500-204-23-4.

PRECAUTIONARY DATA

Personnel performing instructions involving operations, procedures, and practices which are included or implied in this technical manual shall observe the following instructions. Disregard of these warnings and precautionary information can cause serious injury, death, or an aborted mission.

WARNING, CAUTIONS, and NOTES are means of attracting attention to essential or critical information in a manual. Definitions are outlined as follows.

WARNING: An operating or maintenance procedure, practice, condition, statement, etc. , which if not strictly observed, could result in injury to or death of personnel.

CAUTION: An operating or maintenance procedure, practice, condition, statement, etc. , which if not strictly observed, could result in damage to, or destruction of, equipment or loss of mission effectiveness or long term health hazards to personnel.

NOTE: An essential operating or maintenance procedure, condition, or statement, which must be highlighted.

WARNING

ELECTRICAL TESTS

Electrical power up to 500 volts is used in testing the equipment. Exercise extreme caution during these tests.

ELECTRICAL EQUIPMENT

All switches and electrical equipment shall be of the enclosed explosion-proof type. All metal apparatus shall be grounded to avoid the danger of igniting test fluid fumes or creating electrical shock.

USING SOLVENTS/PAINTS

Standard precautions such as fire prevention and adequate ventilation shall be exercised when using solvents or applying primer and coating.

Wear gloves or gauntlets when handling solvents as solvents may cause skin disorders.

Cements and solvents used to repair liferafts are flammable and shall be treated as such. Never smoke or permit any type of open flame near when using cements or solvents.

Dichloromethane (methylene chloride) vapor is heavier than air; adequate ventilation shall be provided for working personnel. Dichloromethane (methyene chloride) is toxic when vapors are inhaled over an extended period of time.

Acrylic monomer and polymer base adhesive, MIL-A-8576, contains a volatile liquid which may prove toxic when vapors are inhaled over extended periods. Use only with adequate ventilation.

Observe fire precautions when using aliphatic naphtha, Federal Specification TT-N-95.

HANDLING PLASTICS

Wear gloves to protect hands when handling hot plastic. Boiling water shall not be used for heating acrylate base plastics.

Provide adequate ventilation when working with Furane Plastics, Epocast H-991-A, Furane hardener 941, or equivalents, as these materials are toxic.

LUBRICATING OIL

Lubricating oil, MIL-L-7808 or MIL-L-23699, contains an additive which is poisonous and absorbed readily through the skin. Do not allow oil to remain on skin any longer than necessary.

FUEL

When servicing aircraft or support equipment, clean up spilled fuel with cotton mops or cotton rags. Wash off any fuel on hands, body, or clothing.

HANDLING ACID

Wear protective clothing when mixing acid with water. Always pour acid into water, never water into acid.

HANDLING PYROTECHNIC FLARES

Handle pyrotechnic flares with the same care as high explosives.

MAGNESIUM ALLOY FIRE

Do not use water or any standard liquid or foam-type fire extinguishers on a magnesium alloy fire, as they may cause an explosion. Use dry sand or talcum powder, Federal Specification U-T-30.

REMOVING CORROSION

Take precautions to prevent possible dust explosions when removing corrosion from steel alloys. Use goggles or face shield when removing paint or corrosion with a wire brush or by the grinding method.

OXYGEN SYSTEM

Do not allow petroleum base products to come in contact with oxygen system components, as an explosion or fire may result.

Do not use masking tape to seal openings in oxygen regulators. Masking tape constitutes a safety hazard when used on either serviceable or repairable oxygen equipment.

Do not use drycleaning solvent, Federal Specification P-D-680, near oxygen storage or transfer systems; the combination of these two will form a highly explosive mixture.

GROUND SUPPORT EQUIPMENT

Do not attempt to lift any load when the hydraulic axle jack is tilted.

To prevent accidental falls, appropriate maintenance platforms/safety stands illustrated in appropriate workstand manuals or any other approved locally procured/manufactured safety stands/restraint equipment will be used when working (above 10 feet) on aircraft in a nontactical environment.

Install safety lock when an adjustable-height maintenance platform is in use.

Ensure the air hose used with compressed air is safe for the pressure being handled.

Release air pressure in air compressor tank before performing maintenance on air compressors.

Disconnect power before changing belts on electrically-driven compressors.

Disconnect electrical power before opening or disassembling any part of electrical equipment.

RADIOGRAPHIC EQUIPMENT

Exercise extreme caution when performing radiographic inspections to prevent personnel from coming in contact with radiation. Radiation from X-ray units and radioisotope sources is extremely destructive to living tissue.

FIRE EXTINGUISHERS

Monobromotrifluoromethane (CF3Br) is highly volatile, but not easily detected by odor. Although nontoxic, CF3Br shall be considered in the same class as other freons and carbon dioxide, i. e. , capable of causing danger to personnel primarily by reduction of oxygen available for proper breathing. The liquid may cause frostbite or low temperature burns if allowed to come in contact with the skin.

Bromochloromethane (CB) is a narcotic agent of moderate intensity, but of prolonged duration. It is considered less toxic than carbon tetrachloride, methylbromide, or the usual products of combustion. Normal precautions should be taken while using bromochloromethane, including the use supplied breathing air in enclosed spaces.

HYDRAULIC FLUID

To avoid contamination, do not use previously opened cans of hydraulic fluid. A new, sealed can of fluid must be opened and used. When opening can, clean top and use a clean, sharp, unplated instrument to prevent contamination.

COMPRESSED AIR

Compressed air shall not be used for cleaning purposes except if reduced to less than 30 psi and then only with effective chip-guarding and personal protective equipment.

TURBINE ENGINE OIL

To avoid contamination, do not use previously opened cans of engine oil. A new sealed can of fluid must be opened and used. When opening can, clean top and use a clean sharp, unplated instrument to prevent contamination.

MERCURY

Mercury is extremely hazardous by inhalation or skin absorption. Be thoroughly trained and knowledgeable about your Hazard Communication program for Mercury prior to use. Refer to TM-385-4, Safety Precautions for Maintenance of Electrical/Electronic Equipment, for safety precautions to use when handling mercury and for methods that are used to clean up mercury spillage.

PROPER USE OF PLATED TOOLS

Use only chrome-plated steel or unplated steel tools for disassembly or reassembly procedures described in this manual. Use of cadmium-plated or zinc-plated tools is not permitted since these platings are prone to chipping and flaking. Should these chips or flakes become imbedded in aircraft parts galvanic corrosion will result. Should these chips or flakes enter fuel wetted or oil wetted components they may eventually clog the filter or produce intergranular attack of nickel or titanium base alloys at elevated temperature. All tools regardless of type plating should be serviceable and free of chipping.

LIST OF EFFECTIVE PAGES

Insert latest changed pages; dispose of superseded pages in accordance with regulations.

NOTE: On a changed page, the portion of the text affected by the latest change is indicated by a vertical line, or other change symbol, in the outer margin of the page. Changes to illustrations are indicated by miniature pointing hands. Changes to wiring diagrams are indicated by shaded areas.

Dates of issue for original and changed pages are:

Original	31 July 1992	Change 3	30 April 1996
Change 1	28 May 1993	Change 4	30 July 1999
Change 2	29 July 1993		

Page No.	*Change No.
Cover	4
a thru d	0
A	4
B blank	0
i	4
1-1	0
1-2 blank	0
2-1 and 2-2	3
2-3 thru 2-9	0
2-10 blank	0
3-1 and 3-2	0
3-3	3
3-4 and 3-5	0
3-6	3
3-7 thru 3-9	0
3-10	3
3-11 thru 3-13	0
3-14	3
3-15	0
3-16 thru 3-18	3
3-19and3-20	0
4-1 and 4-2	0
4-3 and 4-4	3
4-5 and 4-6	0
4-7	3
4-8 thru 4-15	0
4-16 thru 4-18	3
4-19	1
4-20	0
4-21	4
4-22	3
4-23	0
4-24	3
4-25 thru 4-31	0
4-32 blank	0
A-1	3
A-2 blank	0
Glossary 1	0
Glossary 2 blank	0
Index 1 and Index 2	3
Index 3	4
Index 4	3
Index 5	4
Index 6	
Index 7	0
Index 8 and Index 9	3
Index 10 blank	0

*Zero in this column indicates an original page.

TECHNICAL MANUAL

TM 1-1500-204-23-4

HEADQUARTERS
DEPARTMENT OF THE ARMY
WASHINGTON, D.C., 31 July 1992

TECHNICAL MANUAL
AVIATION UNIT MAINTENANCE (AVUM)
AND
AVIATION INTERMEDIATE MAINTENANCE (AVIM) MANUAL
for
GENERAL AIRCRAFT MAINTENANCE
(ELECTRICAL AND INSTRUMENT MAINTENANCE
PROCEDURES AND PRACTICES)

REPORTING ERRORS AND RECOMMENDING IMPROVEMENTS

You can help improve this manual. If you find any mistakes or if you know of a way to improve the procedures, please let us know. Mail your letter or DA Form 2028 (Recommended Changes to Publications and Blank Forms) or DA Form 2028-2 located in the back of this manual directly to: Commander, US Army Aviation and Missile Command, ATTN: AMSAM-MMC-LS-LP, Redstone Arsenal, AL 35898-5230. You may also submit your recommended changes by E-Mail directly to ls-lp@redstone.army.mil or by fax (256) 842-6546/DSN 788-6546. A reply will be furnished directly to you. Instruction for sending an electronic 2028 may be found at the back of this manual immediately preceding the hard copy 2028.

Distribution Statement A. Approved for public release; distribution is unlimited.

TABLE OF CONTENTS

		Page
CHAPTER 1	INTRODUCTION	1-1
CHAPTER 2	ELECTRIC SHOP OPERATIONS	2-1
CHAPTER 3	ELECTRICAL MAINTENANCE PRACTICES	3-1
CHAPTER 4	INSTRUMENT SHOP PRACTICES	4-1
APPENDIX A	REFERENCES	A-1
GLOSSARY		GLOSSARY 1
INDEX		INDEX 1

*This manual together with TM 1-1500-204-23-1 through TM 1-1500-204-23-3 and TM 1-1500-204-23-5 through TM 1-1500-204-23-10, dated 31 July 1992, supersedes TM 55-1500-204-25/1, dated 6 April 1970, including all changes.

CHAPTER 1

INTRODUCTION

1-1. Purpose. This volume provides general information pertaining to the electrical and instrument maintenance procedures and practices. Specific maintenance practices are found in the individual aircraft maintenance manuals. This volume is of maximum benefit to the mechanic who desires information about electric shop operations, electrical maintenance practices, and instrument shop operations. This volume furnishes the mechanic a source of information about how to perform various mechanical functions which are used on all aircraft. This volume is not a requisitioning authority, and applicable repair parts and special tools list should be consulted to obtain the unit of issue and National Stock Number of the items required for maintenance.

1-2. Scope. General information to guide aircraft maintenance personnel is covered within this volume; however, no attempt has been made to include special parts or equipment which are applicable only to individual or special aircraft.

1-3. Consumable Materials. Refer to TM 1-1500204-23-6 for consumable materials in this volume.

CHAPTER 2

ELECTRIC SHOP OPERATIONS

2-1. General Shop Rules. The practices and procedures described in this chapter pertain to the repair functions of aviation activities and are applicable to all levels of maintenance. Because of the many types of Army aircraft, each shop within the manufacturing and repair section must, of necessity, have personnel trained in general practices and procedures to the extent that different type and model aircraft do not upset a smooth running shop.

a. Responsibility. All supervisory personnel in the manufacturing section are responsible for a continuing and effective shop safety program. To implement and maintain this program, shop supervisors will utilize bulletin boards, signs, and any other effective method. Shop personnel will cooperate in the shop safety program by making helpful recommendations, and continually exercising care and caution in the operation of all shop equipment. All shop personnel will strive to improve the safety program and be especially alert to observe and correct unsafe shop practices. All accidents, no matter how minor, shall be reported to the shop supervisor, and all published instructions regarding safety shall be strictly adhered to. Also, safety engineers and safety officers will ensure that proper safety procedures are adhered to in accordance with AR 385-10, Army Safety Program; AR 385-30, Safety Color Code Markings and Signs; AR 385-32, Protective Clothing and Equipment; TB 385-4, Safety Precautions for Maintenance of Electrical/Electronic Equipment; The Occupational Safety and Health Act of 1971, OSHA 1910. 251; all applicable fire codes, NFPA 410; and other accepted civilian and military safety practices.

b. Shop Housekeeping. Housekeeping is the yardstick by which the shops in the manufacturing section are judged. A dean, well-arranged shop is a safe shop and reflects credit on all personnel concerned with its operation. The following shop practices shall be observed:

(1) Oil pans or drip pans shall be used where leaking oil, grease, and similar materials may cause hazardous accumulations on equipment or floors. All spills shall be cleaned up immediately. Approved sweeping compound may be used to remove these materials from the floor.

CAUTION

Floors shall not be cleaned with volatile or flammable liquids. A flammable film may remain and cause a fire hazard.

(2) Floors shall be maintained smooth and clean, free of all obstructions and slippery substances. Holes and irregularities in floors shall be repaired to maintain a level surface free from tripping hazards.

(3) All unnecessary materials on walls shall be removed and projections shall be kept to a minimum.

(4) Aisles shall be dearly defined and kept free of hazardous obstructions. Where possible, aisles shall be suitably marked by painting.

(5) All machines, work benches, aisles, etc. , shall be adequately illuminated.

c. Equipment Safety Unsafe equipment shall be reported immediately. The following equipment safety practices shall be observed:

(1) Machines shall be located to provide operators with sufficient space to handle materials and perform job operations without interference.

(2) Substantial low resistance conductors shall be used to ground all stationary and portable machines, equipment, or other devices where static charges may be generated, or which require electrical circuits of a hazardous nature.

(3) Shop machinery shall be operated only by qualified personnel observing safe practices.

(4) Safety devices, such as guards, interlocks, automatic releases, and stops, shall always be kept in operating condition.

(5) Ensure that all unauthorized personnel are clear of area before opening valves or energizing electrical circuits for starting machinery.

(6) Suitable mechanical guards, such as enclosures or barricades, shall be permanently installed on all machinery not already equipped with such to eliminate danger of injury from moving parts.

(7) Machinery shall not be adjusted, repaired, oiled, or cleaned while machine is in operation or power is on.

(8) Personnel operating machinery shall wear protective clothing as prescribed. A protective face shield or goggles shall be worn when operating a grinder regardless of whether grinder is equipped with attached shields.

(9) Jewelry shall not be worn while performing any maintenance.

d. Fire Safety. A constant vigilance must be maintained to seek out fire hazards. Fire hazards are constantly present in the shop where sparks, friction, or careless handling can cause an explosion that may destroy equipment or buildings, and injure or kill personnel. Refer to AR 385-10, The Army Safety Program and The Occupational Safety and Health Act of 1971.

(1) NO SMOKING signs shall be placed in areas where smoking could create a fire hazard.

(2) Personnel shall be trained in the use, knowledge, and location of shop fire fighting equipment.

(3) Each shop shall be equipped with fire extinguishers suited for type fire most likely to occur.

(4) Use correct fire extinguisher for class of fire as follows:

- Class A fire (wood, paper, trash, etc). Use water or bromotrifluoromethane fire extinguisher.
- Class B fire (oil, paint, fuel, grease, etc). Use bromotrifluoromethane or carbon dioxide fire extinguisher, or dry chemical extinguisher with class B rating.
- Class C fire (electrical equipment). Use bromotrifluoromethane or carbon dioxide fire extinguisher, or dry chemical extinguisher with class C rating.
- Class D fire (combustible metals) magnesium, titanium, zirconium, sodium, lithium, and potassium). Use dry powder type fire extinguisher.

(5) Oily waste, rags, and similar combustible materials shall be discarded in self-closing metal containers which shall be emptied daily.

(6) Use only approved cleaning solvents.

(7) Flammable materials shall not be stored in the shop.

e. Maintenance of Shop Equipment. Maintenance of shop equipment consists of cleaning, preventive maintenance, and replacement of defective parts. Preventive maintenance includes before-operation, during-operation, after-operation, services performed by operator, and scheduled services to be performed at designated intervals. Consult the operation and service instructions manual for specific maintenance instructions on particular types of equipment.

2-2. Basic Principles and Theory for Direct Current. Direct Current (dc) flows constantly in only one direction with a constant polarity. It changes magnitude only when the circuit is opened or dosed, as shown in the dc wave form in figure 2-1.

2-3. Basic Principles and Theory for Alternating Current. Alternating current (ac) flows periodically first in one direction and then in the opposite direction, as shown in figure 2-2. The time necessary for the current to go from 0 to a maximum positive, to 0, to maximum negative, and return again to 0 is the time for one cycle. That portion of the cycle during which the current flows in one direction only is called an alternation. Frequency is the number of I cycles occurring per second, and an alternating current may be any frequency.

2-4. Wiring Diagram Symbols, Charts, and Schematics. See figures 2-3 and 2-4 for wiring diagram symbols and schematics.

2-5. Basic Circuits. The basic electrical circuits of series, parallel, and compound are explained in the following paragraphs.

a. Series. The series circuit, as shown in figure 2-5, is the most basic type of electrical circuit. It provides a complete path for current to flow from the negative to

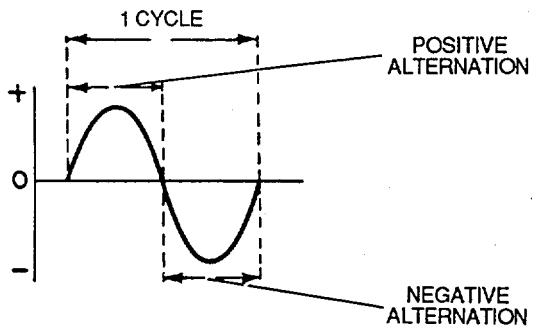

Figure 2-1. Direct Current Wave Form

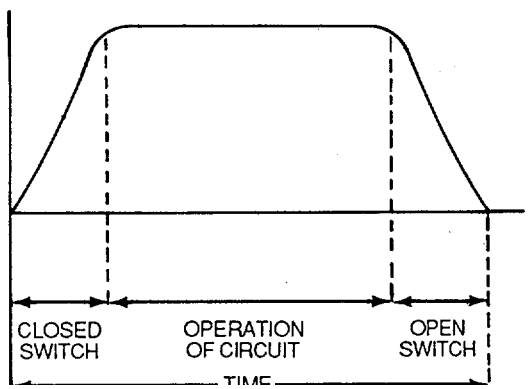

Figure 2-2. Alternating Current Cycle

the positive terminal of the battery. It provides only one possible path for current to flow. Current flow passes through circuit components, battery, and resistor, one after the other, or in series.

b. Parallel. A circuit in which two or more electrical resistances, or loads, are connected across the same voltage source, as shown in figure 2-6, is a parallel circuit. The parallel circuit differs from the series circuit in that more than one path is provided for current flow. The minimum requirements for a parallel circuit are the following:

- A power source.
- Conductors.
- A resistance or load for each current path.
- Two or more paths for current flow.

c. Compound. A compound circuit is a combination of series and parallel circuits. A series-parallel circuit consists of groups of parallel resistors. An example of a series-parallel circuit is shown in figure 2-7. The requirements for a series-parallel circuit are as follows:

- Power source (battery).
- Conductors (wires).
- Load (resistances).
- More than one path for current flow.
- A control (switch).
- Safety device (fuse).

2-6. Measuring Equipment. Various lights, testers, and meters used to measure electrical values are explained in the following paragraphs.

a. Test Lights. Test lights consist of ordinary low voltage incandescent lamps, neon lamps or headsets, and a pair of leads for connecting the indicator to the circuit to be tested. These testers are simple pieces of test equipment used to. check the continuity of fuses and line circuits. These testers do not give accurate qualitative measurements such as can be obtained with a meter. However, their simplicity is of considerable advantage when open and closed circuit tests are made. The neon and lamp testers also can be used to distinguish between ac and dc supplies and to test capacitors. In some testers a switching arrangement allows a source of voltage to be inserted in series with the test lamp, so that circuits with no voltage applied to them can be checked.

b. Continuity Tester. A continuity tester uses the constant-current circuitry of a multimeter for measurements of resistance. It can be used to check for opens, shorts, or grounds, as shown in figure 2-8.

c. D'Arsonval Meter. The D'Arsonval meter, as shown in figure 2-9, is a dc galvanometer consisting of a narrow rectangular coil suspended between the poles of a permanent magnet. The D'Arsonval meter movement is a current measuring device which is used in ammeters, voltmeters, and ohmmeters. The D'Arsonval meter is being phased out by digital measuring equipment.

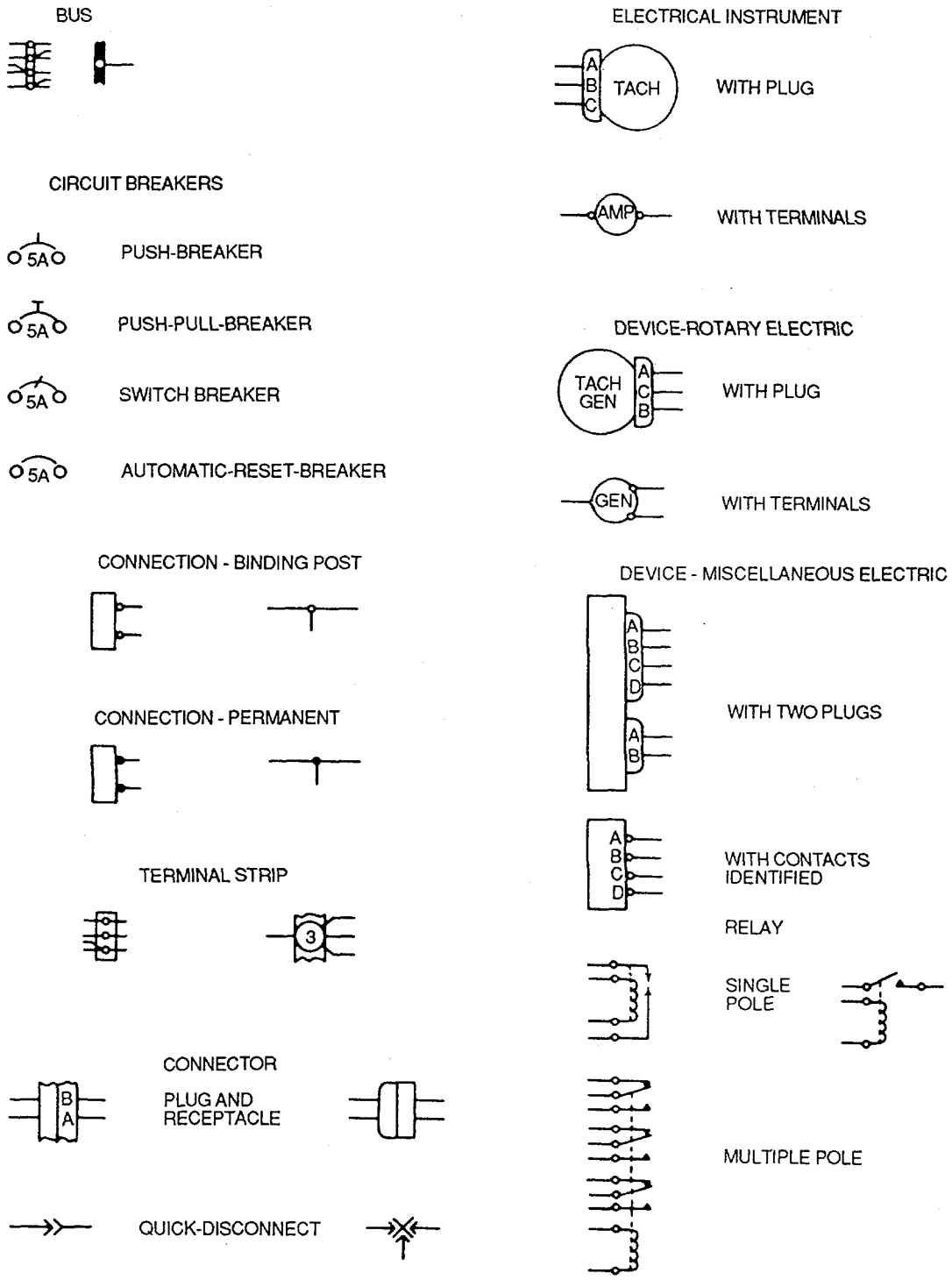

Figure 2-3. Wiring Diagram Symbols (Sheet 1 of 2)

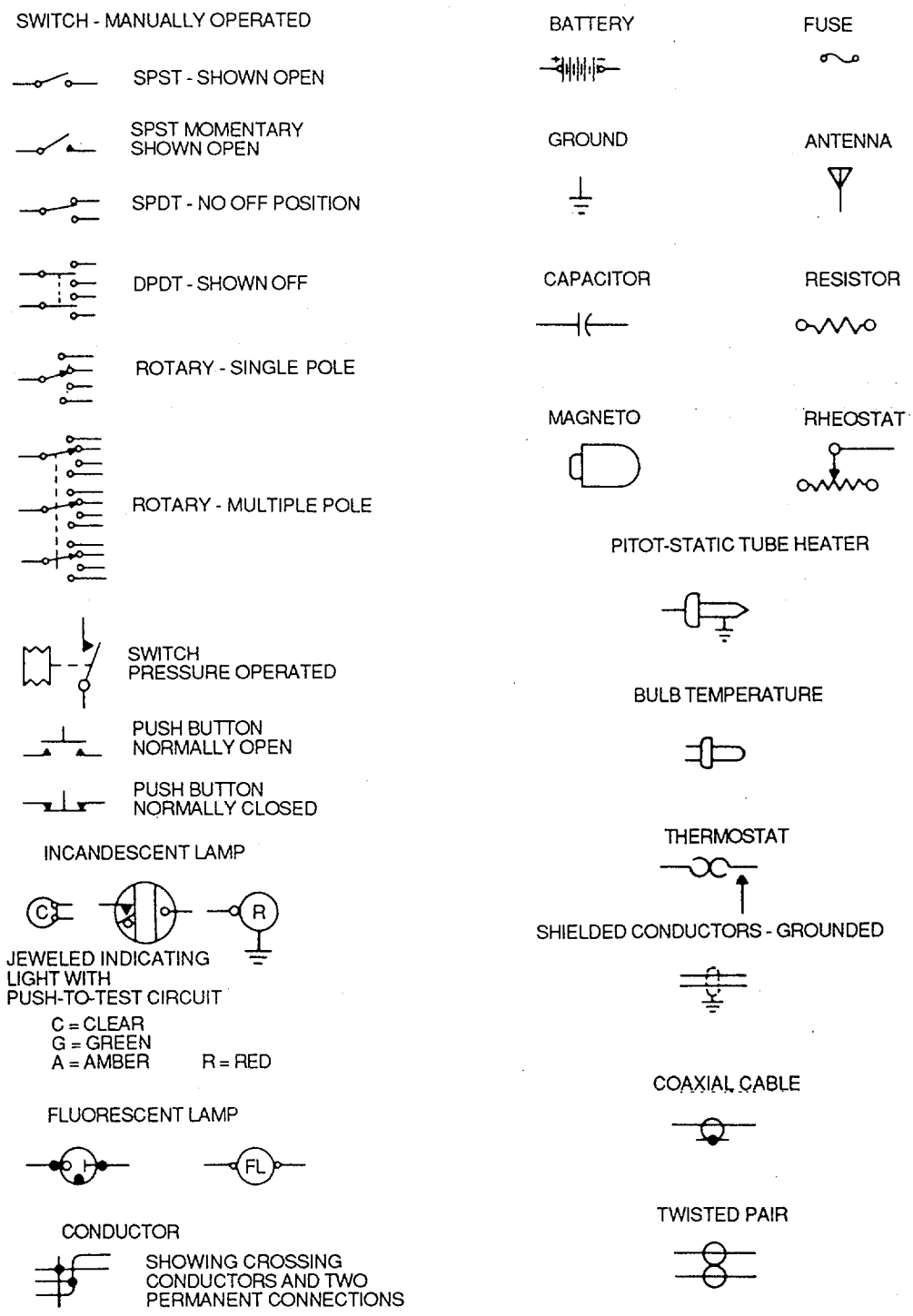

Figure 2-3. Wiring Diagram Symbols (Sheet 2 of 2)

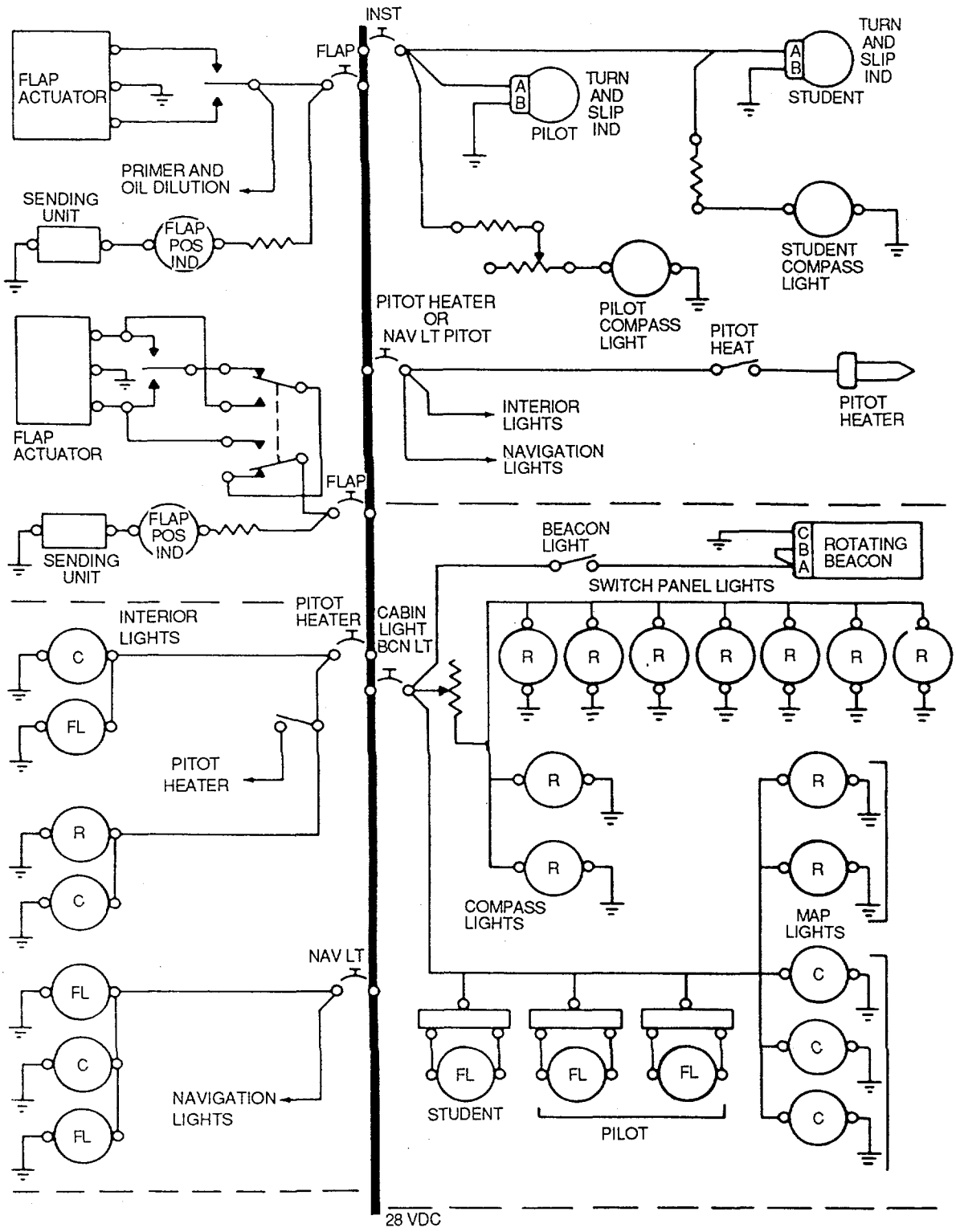

Figure 2-4. Typical Electrical System Schematic

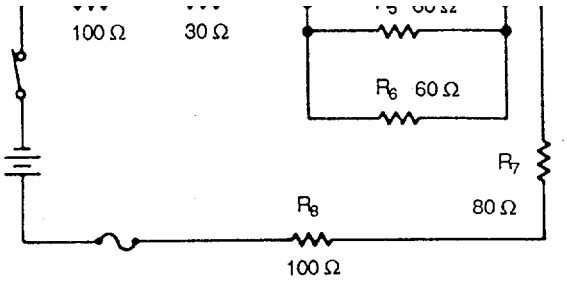

Figure 2-5. Series Circuit

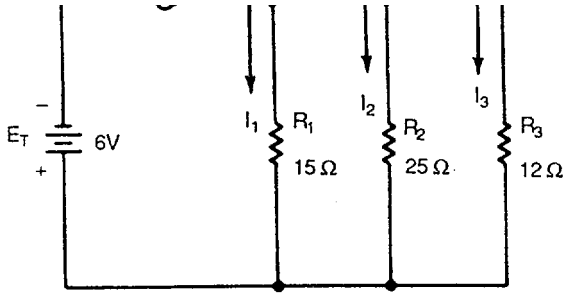

Figure 2-6. Parallel Circuit

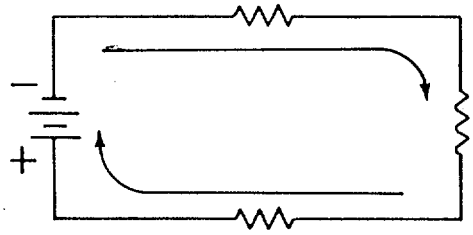

Figure 2-5. Series Circuit

Figure 2-7. Compound Circuit

d. *Ammeter*. An ammeter measures either dc or ac current. To measure current, the circuit under test is broken, and an ammeter is inserted into the break. Its scale is usually graduated in kiloamperes, amperes, milliamperes, or microamperes.

e. *Voltmeter*. A voltmeter is a current measuring instrument designed to indicate voltage by measuring the current flow through a resistance of known value. Its scale is usually graduated in volts. D'Arsonval voltmeters are being phased out by digital voltmeters.

f. *Ohmmeter*. An ohmmeter measures electrical resistance and is used to check circuit continuity. Its scale is usually graduated in ohms, megaohms, or both.

g. *Multimeter*. A multimeter is an instrument incorporating two or more meter circuits and a meter movement in a single case. A typical multimeter contains voltmeter, ammeter, and ohmmeter circuits using a single meter movement. The function switch,. as shown in figure 2-10, must be placed in the proper position for the type of measurement to be made. The range switch must be set to the range desired.

h. *Electrodynamometer*. The electrodynamometer or wattmeter generally is used to measure power taken from the line for operation of any piece of electrical equipment.

i. *Rectifier Meter*. Low-frequency ac measurements are made with a rectifier meter. The rectifier meter is more sensitive and more accurate than the moving vane D'Arsonval-type meters. The function of a rectifier meter is to change ac to a form of dc. The ac is rectified, and the pulsating dc is measured by the meter.

j. *Wattmeter*. The wattmeter (electrodynamometer) is used to measure power in an electrical circuit. Its scale is usually graduated in watts. The wattmeter consists of two stationary coils and one moving coil. The stationary coils have many turns of small wire with high resistance. The movable coil has a few turns of large wire with low resistance and is pivoted in jewelled bearings. The meter needle is attached to one end of the movable-coil shaft, and the damping arrangement, similar to that of the moving-vane meter, is attached to the other end. Springs are provided to control the needle swing.

k. *Frequency Meters*. Frequency or wavelength, however, may be determined also by frequency measuring devices known as wavemeters or beat frequency meters. These meters indicate the fundamental or harmonic frequencies of oscillators or harmonic generators on a calibrated dial. The wavemeter is calibrated in terms of wavelength, and contains a variable tuned circuit whose resonant frequency is determined by the unknown frequency. The beat, or heterodyne frequency, meter uses an oscillator to generate signals of known frequencies and-compares these with the unknown frequency.

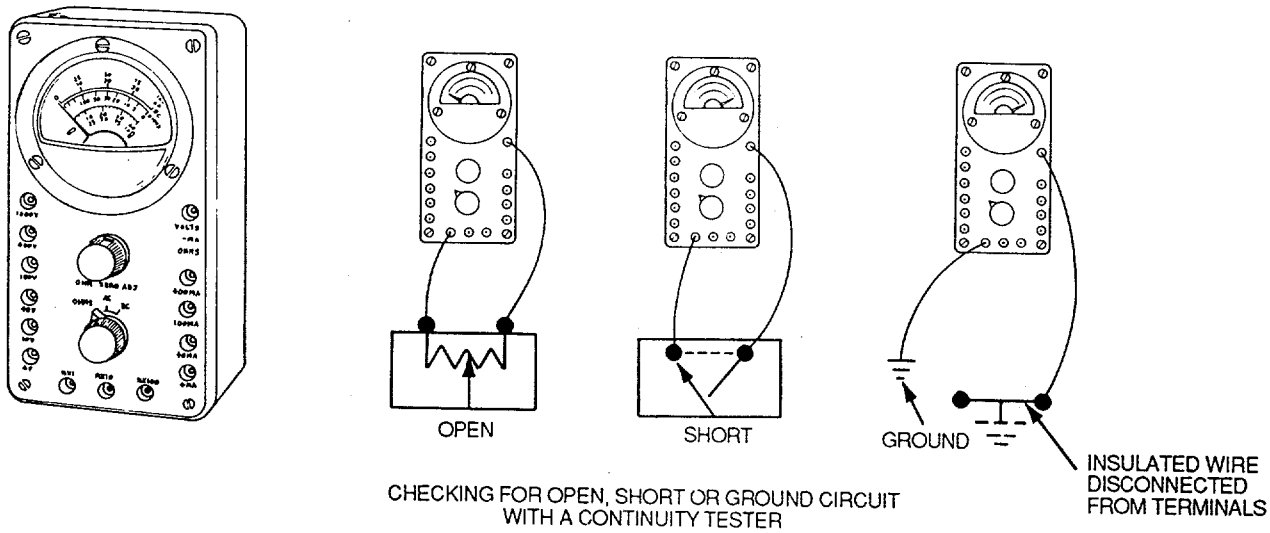

Figure 2-8. Continuity Tester

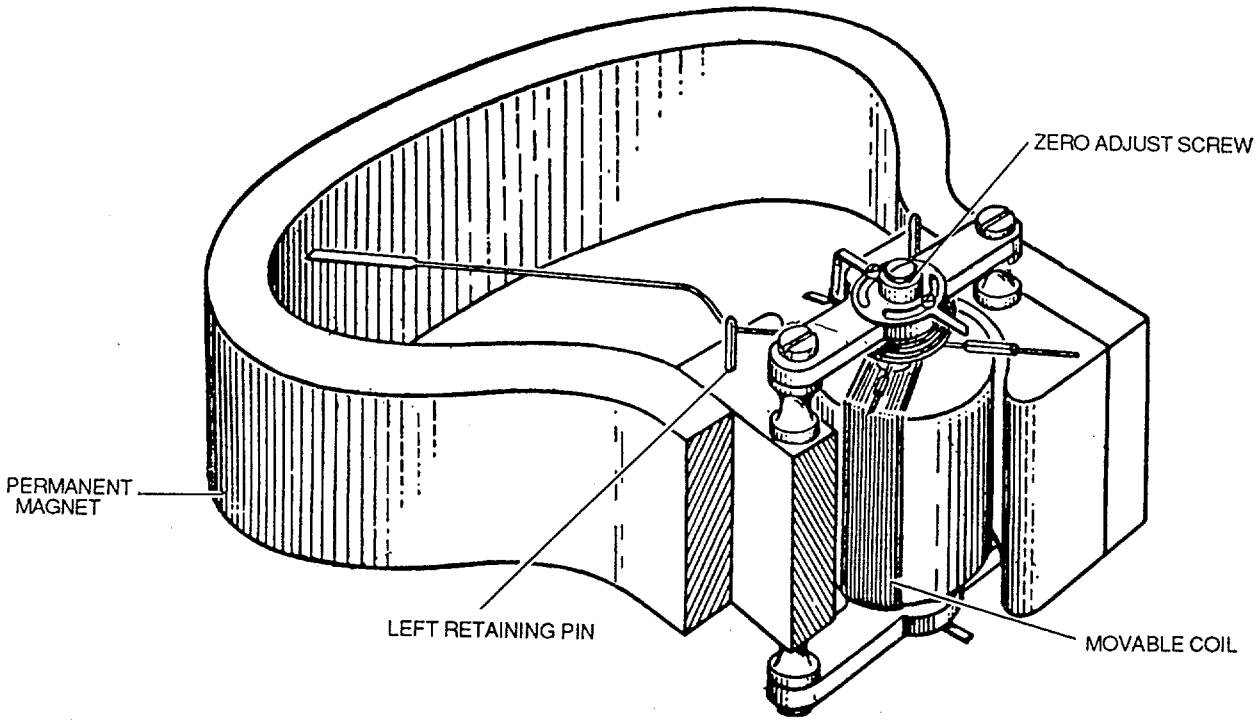

Figure 2-9. D'Arsonval Meter

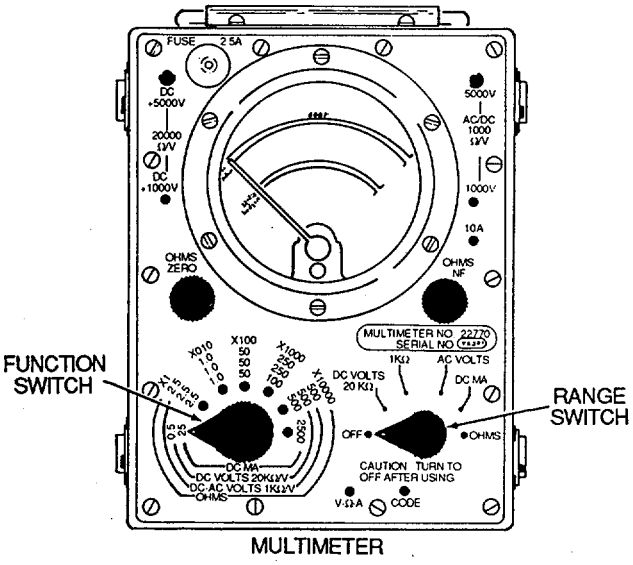

Figure 2-10. Multimeter

CAUTION
If following procedures are not complied with, meters may be damaged.

l. *Meter Safety Precautions*. Before using any meter, carefully read and observe all of the instructions covering its use in the instruction book furnished with it. When using any instrument, the front panel, particularly the area around the jacks and terminals, should be clean and dry. This prevents surface leakage which acts as a shunt and may cause an appreciable error in readings on the more sensitive ranges of the instrument.

(1) Ammeter precautions. Since an ammeter has a low resistance, it is important to be especially careful in using it. If mistakenly put across a voltage source, the meter can be damaged. Never connect an ammeter or milliammeter across a battery or resistor. Always break the circuit and connect the meter in series, one meter lead going to each point of the circuit break.

(a) Range. Always start at the highest meter range when measuring an unknown quantity, then drop down to a lower range if necessary. This practice protects the meter from damage which may result if an attempt is made to read a high value in a low range.

(b) Polarity. Observe polarity. Test leads are usually color-coded black for negative and red for positive. Place them in their proper pin jacks.

(2) Voltmeter precautions. Connect voltmeters in parallel or across the circuit component being measured.

(a) Range. Always start at the highest meter range when measuring an unknown quantity, then drop down to a lower range if necessary. This practice protects the meter from damage which may result if an attempt is made to read a high value in a low range.

(b) Polarity. Observe polarity. Test leads usually are color-coded black for negative and red for positive. Place them in their proper pin jacks.

(3) Ohmmeter precautions. Before making resistance measurements, be sure that no voltage exists in the circuit under test. Discharge all capacitors. The presence of any voltage through the external resistance, in addition to the voltage of the battery in the ohmmeter circuit, can damage the meter.

CHAPTER 3

ELECTRICAL MAINTENANCE PRACTICES

3-1. Installation Inspection of Wires and Cables. Installation inspection of wires, cables, and their components is explained in the following paragraphs. Refer to TM 55-1500-323-24 for wire maintenance practices.

a. Inspection Requirements. Wires and cables shall be inspected for adequacy of support, protection, and general condition throughout. The desirable and undesirable features in aircraft wiring are outlined below and indicated as conditions that should or should not exist. Inspect aircraft wiring as follows:

(1) Ensure wires and cables are supported by cushion clamps, grommets, or other approved devices, at intervals of not more than 24 inches, except when contained in troughs, ducts, or conduits. The supporting devices must be of a suitable size and type, and the wires and cables must be held securely in place without damage to the insulation.

(2) Provide adequate stand-off support where wires are routed over any structural member in such a manner that chafing is likely to occur. Ensure that the use of proper insulating material, is wrapped over wire or cable to protect against chafing, is not being used in applications where stand-off supports could be installed.

(3) Ensure phenolic blocks, plastic liners, or rubber grommets are installed in holes in bulkheads, floors, or structural members through which wiring must pass and it is impossible to install off-angle clamps to maintain wiring in a fixed position away from edges of holes. In such cases, additional protection, in the form of plastic tubing or insulating tape is optional.

(4) Ensure wires and cables in junction boxes, panels, and bundles are properly supported and laced to provide proper grouping and routing.

WARNING

Make sure any retaining screw or bolt protruding through bulkheads, panels, etc. , does not interfere with flight controls fluid/fuel lines or any other component.

(5) Ensure clamps and retaining screws are properly mounted and secured so that any movement of wires and cables is restricted to the span between points of support. Movement of wires and cables should not be transmitted to soldered or mechanical connections such as terminal posts or connectors.

(6) Check that wires and cables are supported and bound so that interference with other wires, cables and equipment does not exist.

(7) Check that wires and cables are adequately supported to prevent excessive movement in areas of high vibration.

(8) Ensure insulating tubing and tape is secured in place by tying or with clamps.

(9) Ensure continuous lacing is not used, except in panels and junction boxes where this practice is optional. Lacing installed in this manner outside junction boxes shall be removed and replaced with individual loops.

(10) Ensure that tapes (such as friction tape) which will dry out in service, produce chemical reactions with wire or cable insulation, or absorb moisture, are not used.

(11) Ensure minimum use of insulating tubing is made when used to protect wire and cable from abrasion, chafing, exposure to fluids, and other conditions which could affect cable insulation. Use of insulating tubing for support of wires and cables prohibited.

(12) Do not use moisture-absorbent material as fill for clamps or adapters.

(13) Check that wires and cables are not tied or fastened together in conduit or insulating tubing.

(14) Check that cable supports do not restrict the wires or cables in such a manner as to interfere with operation of equipment shock mounts.

(15) Ensure tape or cord are not used for primary support.

(16) Ensure drain holes are present in drip loops or lowest portion of tubing placed over wiring.

(17) Check that wires and cables are routed in such a manner that chafing will not occur.

(18) Ensure wires and cables are positioned in such a manner that they are not likely to be used as handholds, or as support for personal belongings and equipment.

(19) Check that wires and cables are routed so that they are not exposed to damage by personnel moving in the aircraft.

(20) Check that wires and cables are located so as not to be susceptible to damage by the storage or shifting of cargo.

(21) Check that wires and cables are routed so that there is no possibility of damage from battery leakage or any other fluids.

(22) Ensure wires and cables are adequately protected in wheel wells or other areas where they may be exposed to damage from impact of rocks, ice, mud, etc. If re-routing of wires or cables is not practical, it is permissible to install metal shielding or insulating tubing. This should be held to an essential minimum.

(23) Ensure wires and cables routed within 6 inches of any flammable liquid or fuel line are closely and rigidly supported, and are not attached to fuel lines. Ensure wires and cables are routed above fluid/fuel lines.

(24) Ensure a trap or drip loop is provided to prevent fluids or condensed moisture from running into wires and cables dressed downward to a connector, terminal block, panel, or junction box.

(25) Ensure wires and cables, installed in locations where fluids may be trapped, are routed as high as possible, and protected with insulating tubing when this is not possible.

(26) Check that wires and cables are kept separate from high temperature equipment, such as resistors, tailpipes, heating ducts, and deicers.

(27) Ensure the minimum radius of bend for wire or cable is 10 times the outside diameter of the wire or cable, except that at the terminal strips where the wire is suitably supported, the radius may be 3 times the diameter of the wire or cable. Where it is impractical to install wiring or cable within the radius requirements, the bend shall be enclosed in insulating tubing.

(28) Ensure coaxial cables are not bent at a radius of less then 6 times the outside diameter of the cable.

(29) Check that wires and cables attached to assemblies where relative movement occurs (such as at hinges and rotating pieces, particularly control sticks, control wheels, columns and flight control surfaces) are installed or protected in such manner as to prevent deterioration of the wires and cables caused by the relative movement of the assembly parts.

(30) Ensure wires and cables are provided with enough slack to meet the following requirements:

- Permit ease of maintenance.
- Allow replacement of terminals at least two times, except for sizes AN-2 and AL-4 and larger where only one replacement should be made.
- Prevent mechanical strain on the wires, cables, junctions and supports.
- Permit free movement of shock-and-vibration mounted equipment.
- Allow shifting of equipment as necessary to perform alignment, servicing, tuning, removal of dust covers, and changing of tubes, while installed in aircraft.

(31) Check that unused wires are individually dead-ended, tied into a bundle, and secured to a permanent structure. Each wire is to have strands cut even with insulation and a pre-insulated closed end connector, or a 1-inch piece of insulating tubing placed over wire with its end folded back and tied.

(32) Check that shielding is in place and properly fastened.

b. Replacement Criteria. Wiring shall be replaced when found to have any of the following defects:

- It becomes unmanageable due to splice or number of splices.
- The primary insulation has been broken.
- The outer insulation is weather-cracked.
- It is known to have been exposed to battery acid or the insulation is beginning to deteriorate due to suspected exposure to battery acid.
- It shows evidence of overheating.
- The insulation has been saturated with engine oil, landing gear lubricant, hydraulic fluid, or solvent.
- It shows evidence of having been crushed or severely kinked.

CAUTION

Cleaning agents or preservatives shall not be used to minimize the effects of corrosion on or deterioration of wire shields. Further damage may occur.

- The metallic shield on shielded wire is frayed or corroded.
- The insulation sleeves placed over wire splices or terminal lugs show evidence of breaks, cracks, dirt, or moisture.

c. Wire Sizes. Wire is manufactured in sizes according to a standard known as the American Wire Gauge (AWG). Wire size may be determined by using a wire gauge as shown in figure 3-1. This type of gauge will measure wires ranging in size from number 0 to number 36. The wire to be measured is inserted in the smallest slot that will just accommodate the bare wire. The gauge number corresponding to that slot indicates the wire size. The slot has parallel sides and should not be confused with the semicircular opening at the end of the slot. The opening simply permits the free movement of the wire all the way through the slot.

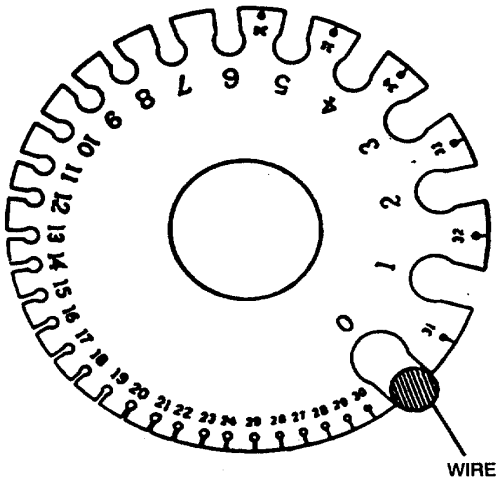

Figure 3-1. Wire Gauge

NOTE

Gauge numbers are useful in comparing the diameter of wires, but not all types of wire or cable can be accurately measured with a gauge. Large wires are usually stranded to increase their flexibility. In such cases, the total area can be determined by multiplying the area of one strand (usually computed in circular mils when diameter or gauge number is known) by the number of strands in the wire or cable.

d. Wire Identification. To make maintenance easier, each interconnecting wire and cable installed in aircraft is marked with a combination of letters and numbers which identify the wire, the circuit it belongs to, its gauge size, and other information necessary to relate the wire to a wiring diagram. This marking is called the cable identification code. Details of the code are given in MIL-W-5088. Wire received from the manufacturer is printed with the manufacturer's code designation is a light green color at intervals of one to five feet, the MS number and dash number of the wire, and a one-, two-, or three-digit number indicating the color of the basic wire insulation and the color of the stripes (if present). The color code is as follows:

Black	0	Blue	6
Brown	1	Violet	7
Red	2	Gray	8
Orange	3	White	9
Yellow	4	(includes also	
Green	5	uncolored insulations)	

e. *Wire Stripping*. Insulation must be be stripped from connecting ends to expose the bare conductor before wire can be assembled to connectors, terminals, or splices. The following general precautions are recommended when stripping any type of wire:

- When using any type of wire stripper, hold the wire so that it is perpendicular to cutting blades.
- Adjust automatic stripping tools carefully; follow the manufacturer's instructions to avoid nicking, cutting, or otherwise damaging strands. This is especially important for aluminum wires and for copper wires smaller than No. 10. Examine stripped wires for damage. Cut off and restrip (if length is sufficient), or reject and replace any wires having more than the allowable number of nicked or broken strands listed in the manufacturer's instructions.
- Make sure insulation is clean-cut with no frayed or ragged edges. Trim if necessary.
- Make sure all insulation is removed from stripped area. Some types of wires are supplied with a transparent layer of insulation between the conductor and the primary insulation. If this is present, remove it.
- When using hand-plier strippers to remove lengths of insulation longer than 3/4 in. , it is easier to accomplish in two or more operations.
- Re-twist copper strands by hand or with pliers, if necessary, to restore natural lay and tightness of strands.

(1) Aluminum wire. Aluminum wire must be stripped with extreme care, since individual strands will break very easily after being nicked.

(2) Copper wire. Copper wire can be stripped in a number of ways, depending on the size and insulation. Table 3-1 lists some types of stripping tools recommended for various wire sizes and types of insulation.

f. *Marking of Wires with Marking Machine*. Marking machines, as shown in figures 3-2 and 3-3, are used to stamp the identification code. For stamping a large number of long wires, use an automatic-wire marking machine. In machines of this type as shown in figure 3-2, wire sizes No. 26 through No. 14 are fed through and stamped automatically. Wires larger than No. 14 are fed through by hand, but stamped automatically. For short wires, on repair or maintenance work, a hand operated wire marking machine is more convenient and economical as shown in figure 3-3. In this type of machine, the desired amount of wire is fed through by hand, and stamped by operating the handle for each marking. Wire guide holders in sizes to fit wires, and slot holders to hold appropriate size type, are furnished to fit the machines. Type is supplied in three sizes to mark wire No. 26 through No. 0000, as shown in table 3-2. Marking foil is available in black or white (and other colors if needed for special applications).

NOTE
Store foils at approximately 70°F and 60 percent relative humidity.

g. *Terminals and Terminal Blocks*. When installing terminals and terminal blocks, inspect using the following procedures:

(1) Check that insulating tubing is placed over terminals (except pre-insulated types) to provide electrical protection and mechanical support, and is secured to prevent slippage of the tubing from the terminal.

Table 3-1. Copper Wire Strippers

Stripper	Wire size	Insulations
Hot-blade	No. 26 - No. 4	All except asbestos
Rotary, Electric	No. 26 - No. 4	All
Bench	No. 20 - No. 6	All
Hand Pliers	No. 26 - No. 8	All
Knife	No. 2 - No. 0000	All

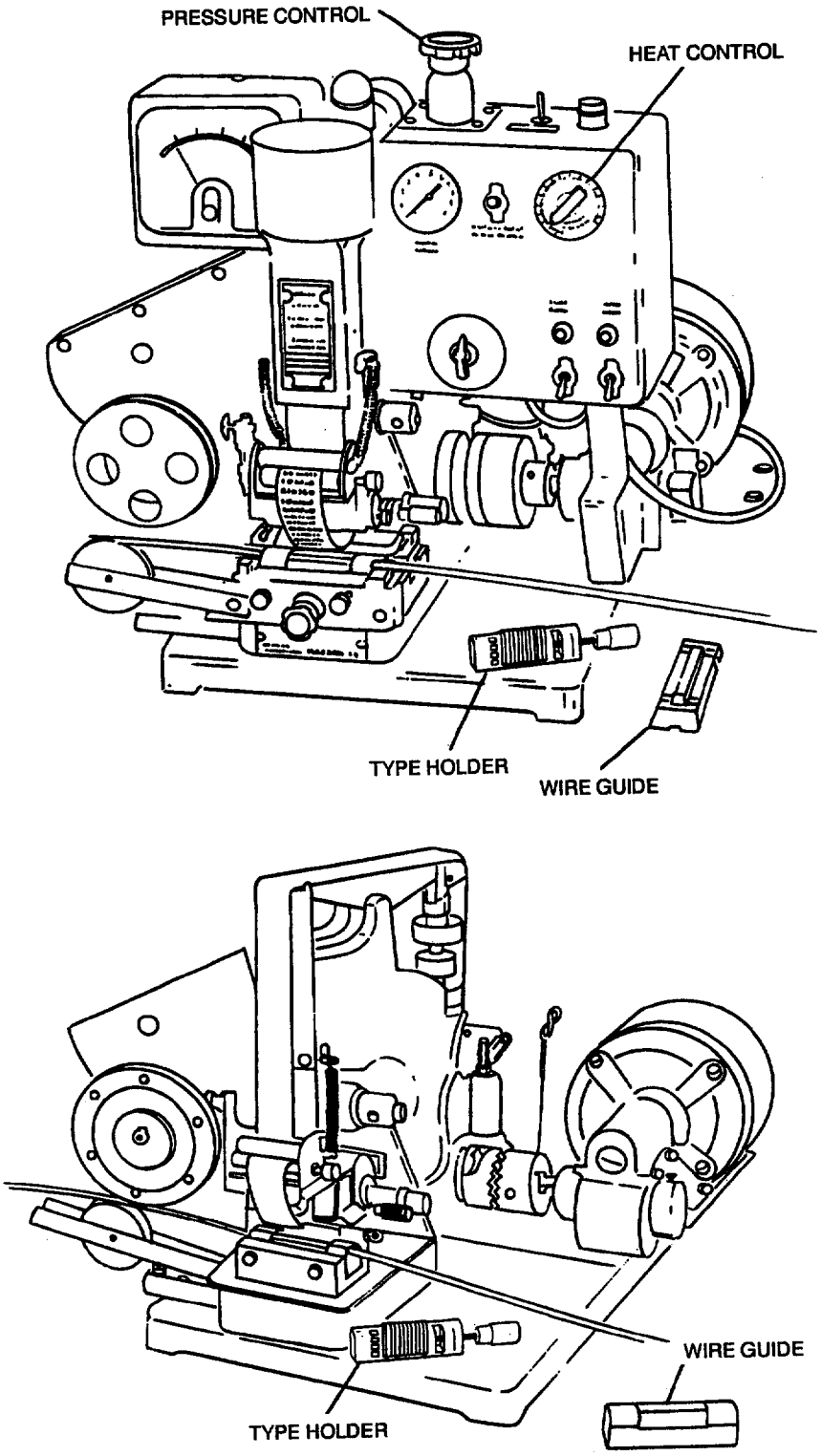

Figure 3-2. Automatic Wire Marking Machines

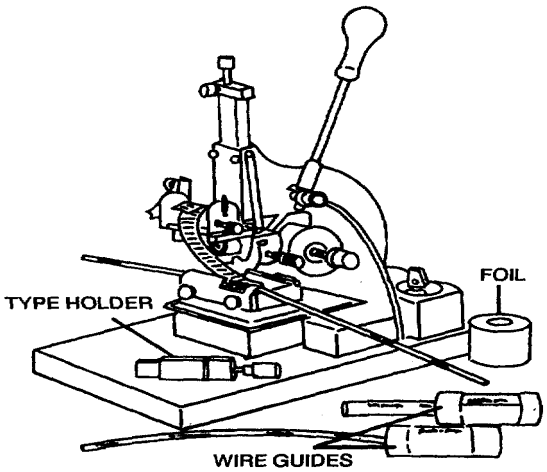

Figure 3-3. Hand Wire Marking Machine

Table 3-2. Recommended Sizes of Marking Type

Wire size	Height of letters (Inches)
No. 26 and No. 22	1/16
No. 20 thru No. 14	5/64
No. 12 thru No. 0000 and Coaxial Cable	7/64

(2) Ensure terminal blocks are securely mounted.

(3) Ensure terminal connections to terminal block studs, and nuts on unused studs, are tight.

(4) Ensure evidence of overheating and corrosion is not present on connections to terminal block studs.

(5) Ensure the number of terminal connections to a terminal block stud does not exceed four.

(6) Inspect for physical damage to studs, stud threads, and terminal blocks. Replace cracked terminal strips and those studs with stripped threads.

h. Fuses and Fuse Holders. When installing fuses and fuse holders, inspect using the following procedures:

(1) Inspect for security of connections to fuse holders.

(2) Inspect for the presence of corrosion and evidence of overheating on fuses and fuse holders. Replace corroded fuses and clean fuse holders. If evidence of overheating is found, check for correct rating of fuse.

(3) Inspect for security of mounting of fuse holder.

(4) Inspect for replenishment of spare fuses used in flight. Replace with fuses of appropriate current rating only.

(5) Inspect for exposed fuses susceptible to shorting. Install cover of non-conducting material if required.

i. Splices. When installing crimp type connectors, inspect splices using the following procedures:

(1) Check for the presence of snug-fitting transparent insulating tubing extending at least 1/2 inch over each end and tied in place with waxed cord unless the connector is of the pre-insulated type. Use of transparent tape is approved, but only as a temporary means, to be replaced as soon as possible.

(2) Check for the spacing of splices at staggered intervals to prevent excessive enlargement of the bundle. Groups of non-staggered splices need not be replaced; however, it may be necessary to use extra damps to support the added localized weight.

NOTE

- **Splices may be used within 12 inches of a termination device when attached to the pigtail spare lead of a potted termination device, or to splice multiple wires to a single wire, or to adjust the wire sizes so that they are compatible with the contact crimp barrel sizes.**
- **The application of splices shall be design control and be authorized by the applicable technical manual or ATCOM engineering.**

j. *Conduits*. When installing conduits, inspect using the following procedures:

(1) Ensure the conduit is installed so that strain and flexing of ferrules is relieved.

(2) Ensure the conduit is not collapsed or flattened from excessive bending.

(3) Ensure that conduits are installed so that fluids or condensed moisture will not be trapped. Suitable drain holes shall be provided at the low points, except for magneto ground-cable conduit and metallic flexible conduit.

(4) Ensure that bonding clamps are installed in such a manner that damage to the conduit cannot result.

k. *Bonds*. A bond is any fixed union existing between two metallic objects that results in electrical conductivity between them. Such union results from either physical contact between conductive surfaces of the objects or from the addition of a firm electrical connection between them. Inspect for the following desirable features:

NOTE

Intermittent electrical contact between conducting surfaces, which may become part of a ground plane or a current path, shall be prevented either by bonding, or by insulation, if bonding is not necessary.

- Metallic conduits shall be bonded to the aircraft structure at each terminating and break point. The bonding path may be through the equipment at which the conduit terminates.
- Bond connections shall be secure and free from corrosion.
- Bonding jumpers shall be installed in such a manner as not to interfere in any way with the operation of movable components of the aircraft.
- Self-tapping screws shall not be used for bonding purposes. Only standard threaded screws or bolts of appropriate size shall be used.
- Exposed conducting frames or parts of electrical or electronic equipment shall have a low resistance bond of less than 0.1 ohm to structure. If the equipment design includes a ground terminal or pin which is internally connected to such exposed parts, a ground wire connection to such a terminal will satisfy this requirement.
- Bonding jumpers shall be kept as short and direct as possible, and when practicable, shall not exceed 3 inches in length.
- Bonds shall be attached directly to the basic aircraft structure rather than through other bonded parts insofar as practical.
- Bonds shall be installed to ensure that the structures of military aircraft are electrically stable and free from the hazards of lightning, static discharge, electrical shock, etc., and to provide for the suppression of radio interference resulting from these hazards.

l. *Junctions*. Ensure that only approved devices, such as solderless type terminals, terminal blocks, connectors, disconnect splices, permanent splices, and feed-through bushings are used for cable junctions. Inspect for the provisions outlined below:

- Electrical junctions shall be protected from short circuits resulting from movement of personnel, cargo, shell cases, clips, and other loose or stored materials. Protection shall be provided by covering, installing them in junction boxes, or by locating them in such a manner that additional protection is not required.
- Exposed junctions and busses shall be protected with insulating materials. Junctions and busses located within enclosed areas containing only electrical and electronic equipment are not considered exposed.
- Electrical junctions shall be mechanically and electrically secure. They shall not be subject to mechanical strain or used as a support for insulating materials, except for insulation on terminals.

m. *Toggle Switches*. Inspect toggle switches using the following procedures:

NOTE

In the event the following inspections reveal that the switches are unserviceable, replace defective switches with switches of the same type and current rating.

(1) Conduct a visual examination for physical damage, and check to see that switches are securely attached to the mounting panel.

(2) Check for loose or deformed electrical connections or evidence of corrosion of the terminals, terminal lugs or screws.

(3) Check for manual operation by actuating toggle lever several times. This also serves to remove any superficial contamination or foreign deposits on the internal electrical contacts. Return toggle lever to proper position.

(4) Test for electrical continuity as measured across the external terminals by means of an ohmmeter. Electrical resistance across any set of closed contacts should not exceed 1 ohm. Intermittent or excessive resistance normally indicates that the internal contacts are corroded. In the event a few additional actuations of the switch does not clear up this condition, replace the switch with like item. Continuity tests of installed switches require that the switch be electrically isolated from other circuitry to preclude measurement of low resistance parallel systems. This can usually be accomplished by opening the circuit breaker or fuse on the line side of the switches.

(5) Check switches that are frequently exposed to direct water spray, rain or heavy dust concentration. These switches require timely checks for manual operation, corrosion and continuity.

n. Circuit Breakers. Inspect circuit breakers using the following procedures:

NOTE

Replace breakers with breakers of the same type and current rating unless otherwise specified, providing the following inspections reveal that the breaker is unserviceable.

(1) Determine that the breaker case and mounting means are secure to the mounting panel and there is no evidence of physical damage.

(2) Inspect for loose electrical termination or evidence of corrosion of the terminals, terminal lugs or screws.

(3) Ensure positive manual operation by actuating push-pull button or toggle several times. This operation also serves to remove any superficial contaminants or foreign deposits present on the surface, of the internal electrical contacts. Return actuator to proper position.

(4) Check for evidence that breaker had been subjected to burning or overheating in the area adjacent to the manual actuator. The burned area is usually caused by electrical arcing as a result of a combination of the presence of excessive moisture and poor dielectric characteristics of the breaker.

CAUTION

Do not connect ohmmeter to a live circuit.

(5) Test for electrical continuity, as measured across the external breaker terminals. Use a reliable ohmmeter capable of indicating an appropriate dc resistance value for the purpose of determining that the maximum overall electrical resistance does not exceed 1 ohm. Intermittent or excessive resistance readings normally indicate that the internal breaker contacts are corroded. In the event a few additional actuations of the breaker do not clear up this condition, the breaker should be replaced. Continuity tests of installed breakers require that the breaker be electrically isolated from other circuitry to preclude measurement of low resistance parallel systems. This can usually be accomplished by opening the switch or switches on the load side of the breaker. Circuit breakers in live circuits can be checked by performing a voltage check.

(6) Test and physically inspect associated wiring for short circuit condition to the aircraft structure. Tripped circuit breakers indicate that an abnormal electrical overload occurred and require immediate investigation to determine the cause for the fault. Repetitive tripping in the same circuit will require an engineering investigation if the operating equipment or electrical load otherwise functions properly and the breaker replacement does not correct the fault.

(7) Check circuit breakers that are frequently exposed to direct water spray, rain, snow or heavy dust concentrations. These breakers require timely checks for manual operation, corrosion, continuity, evidence of burning or electrical arcing.

o. Kapton Wiring. Kapton wire MIL-W-81381 is general purpose wire for use in high voltage applications. The insulation is tape of polyimide or polyimide-fluorocarbon films. The conductors are silver or nickel plated copper, or a high-strength copper alloy. At present Kapton wiring is being phased out on new aircraft and is restricted to ballistically hardened areas. The preferred wire is MIL-W-22759 which cannot be mixed in the same wire bundle as Kapton wire. Refer to TM 55-1500-323-24 for inspection, stripping, and installation of connectors on Kapton wiring. Kapton insulated wire should be inspected whenever maintenance is performed. Slight flaking of top coat is acceptable, however this is considered as a first stage of deterioration. When flaking is observed, dose inspection shall be performed at regular intervals to determine if further deterioration occurs. Excessive flaking or other damage (cuts, chaffing, etc) to insulation requires that the wire be replaced.

3-2. Troubleshooting . Troubleshoot electrical circuits and components when malfunctions cannot be readily located. Use procedures outlined below.

CAUTION

Omit operational check in cases where it is evident that an operational check could result in damage to the aircraft.

a. Operational Check. Perform an operational check of the system involved to determine when it is functioning in accordance with the applicable aircraft maintenance manual. When a malfunction exists, perform the following procedures:

(1) Obtain a wiring diagram of system involved. Be sure wiring diagram is current and applicable to particular model aircraft.

(2) Review operating principles and performance requirements of the system.

(3) Recall similar situations and check Equipment Improvement Recommendation (EIR) file.

(4) Examine aircraft maintenance forms to see what maintenance has been performed on system or general area of system or components.

(5) Decide on all possible component and wiring malfunctions which could cause system to perform as it does. A typical electrical system schematic is shown in figure 2-4.

(6) Of all possible faults or troubles found in step (5), decide which troubles are most probable cause of malfunctions and proceed to test circuits or components with test equipment.

NOTE

The applicable aircraft maintenance manual contains troubleshooting electrical circuits and components.

(7) Upon location of defective component or wiring, accomplish repairs or replacements as necessary.

b. Precautions. Use of test equipment designed primarily for high potential voltage testing on aircraft electrical cabling can be extremely hazardous in those areas where fuels, explosive vapors, or fumes are present in the aircraft. The term high potential voltage testing as used herein is described as that condition of applying a voltage of sufficient magnitude and approaching maximum insulation breakdown limits as specified to determine leakage resistance between wire insulation, conductors, conductor pairs, or groups of conductors individually insulated within an insulated cable jacket. High potential voltage or insulation breakdown testing of aircraft electrical wiring and cabling will be conducted as a last resort after all previous methods of detecting faulty cabling have been accomplished. These methods will consist of continuity, visual inspection, common voltmeter and ohmmeter checks, and other methods not involving high potential voltage tests. The following procedures will apply where tests, employing high potential testers, are made to check aircraft electrical cabling and wiring involving those areas where fuels, fumes, or explosive vapors may possibly be present:

(1) It will be the responsibility of all personnel using high potential voltage test apparatus to trace the physical location of the circuit being tested and determine if explosive vapors, fuels or fumes, are present in any areas of this circuit.

(2) When explosive vapors, fuels, or fumes are determined to be present and adequate ventilation or air circulation is not provided, the following two paragraphs will apply:

(a) If fumes or vapors can be removed by isolating fuel from the areas involved by means of shutoff or bypass valves, only that portion of the fuel system which is isolated must be drained and purged.

(b) If adequate isolation cannot be accomplished, the entire fuel system will be drained and purged.

3-3. Installation of Electrical Connectors and Common Plugs. Plugs and receptacles are provided throughout the aircraft to provide a means of connecting individual components to the electrical system and to facilitate their removal and installation. Electrical connectors also are provided at some firewalls, bulkheads, and decks to provide wire routing through the aircraft structure and to facilitate removal and replacement of wiring harness segments. Those connectors installed in areas of high vibration or in areas not accessible for periodic inspection are secured with wire or otherwise mechanically locked to prevent opening of the connector due to vibration.

a. Types of Connectors. Connectors are identified by AN or MS numbers and are divided into classes with the manufacturer's variations in each class. The manufacturer's variations are differences in appearance and in the method of meeting a specification. Some commonly used connectors are shown in figure 3-4. There are five basic classes of AN or MS connectors used in most aircraft. Each class of connector has slightly different construction characteristics. Classes A, B, C, and D are made of aluminum, and class K is made of steel.

- Class A-Solid, one-piece back shell, general-purpose connector.
- Class B-Connector back shell separates into two parts lengthwise. Used primarily where it is important that the soldered connectors be readily accessible. The back shell is held together by a threaded ring or by screws.
- Class C-A pressurized connector with inserts that are not removable. Similar to a class A connector in appearance, but the inside sealing arrangement is sometimes different. It is used on walls of bulkheads of pressurized equipment.
- Class D-Moisture-and vibration-resistant connector which has a sealing grommet in the back shell. Wires are threaded through tight-fitting holes in the grommet, thus sealing against moisture.
- Class K-A fireproof connector used in areas where it is vital that the electric current is not interrupted, even though the connector may be exposed to continuous open flame. Wires are crimped to the pin or socket contacts and the shells are made of steel. This class of connector is normally longer than other classes of connectors.

(1) MS connectors. MS connectors as shown in figure 3-4 are electric connectors with solder or removable crimp contacts (both front and rear release). These connectors are for use in electronic, electric power, and control circuits.

(2) Special-purpose connectors. In addition to the MS connectors, special purpose types are commonly found in military aircraft. These are described in the following paragraphs.

(a) Moisture-proof connectors (Cannon KE series). These connectors are similar to the MS-K series, with the additions of a moisture-resisting seal. They will mate with MS-K plugs or receptacles, but retain the moisture sealing feature only when mated with corresponding KE series plugs or receptacles.

(b) Subminiature connectors (Cannon US Series). These connectors, as shown in figure 3-5, are wire connecting types only; they have no mounting flanges, but can be mounted with nut and lockwasher. They are used on instruments, switches, relays, transformers, amplifiers, etc.

(c) Rectangular shell connectors (Bendix SR; Cannon DPD). These connectors, as shown in figure 3-6, are flanged for panel or equipment mounting. They consist of an aluminum alloy shell, rigid or resilient insert, and pin or socket contact. They are usually potted to protect connections against moisture at the back of the connector. The mating faces are not moisture sealed.

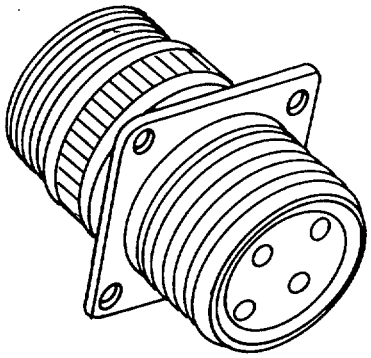

MS3100, MS3400, MS3450
WALL RECEPTACLE

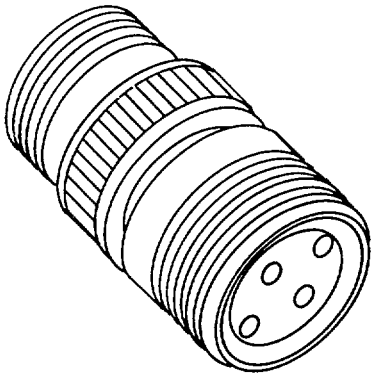

MS3101, MS3401, MS3451
CABLE PLUG

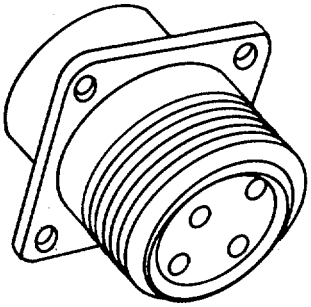

MS3102, MS3402, MS3452
BOX RECEPTACLE

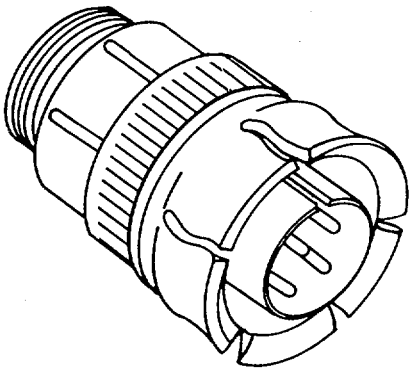

MS3107
QUICK-DISCONNECT PLUG

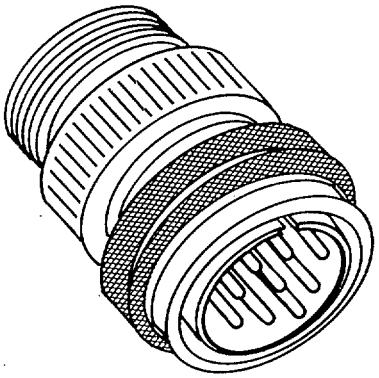

MS3106, MS3406, MS3456
STRAIGHT PLUG

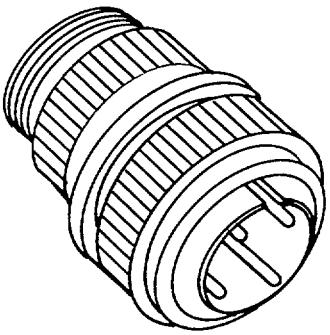

MS3106
STRAIGHT PLUG
(WITHOUT ADAPTER)

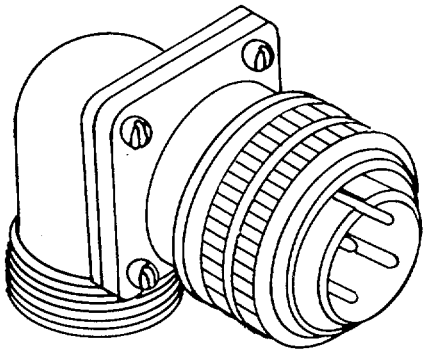

MS3108 (TYPE)
ANGLE PLUG

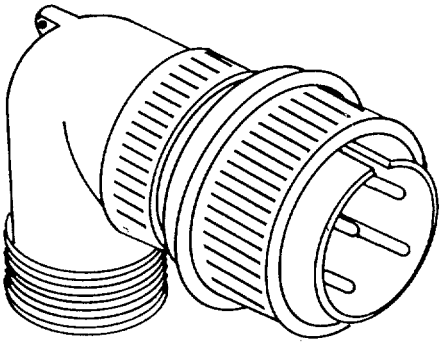

MS3108, MS3408
ANGLE PLUG

Figure 3-4. MS Connectors

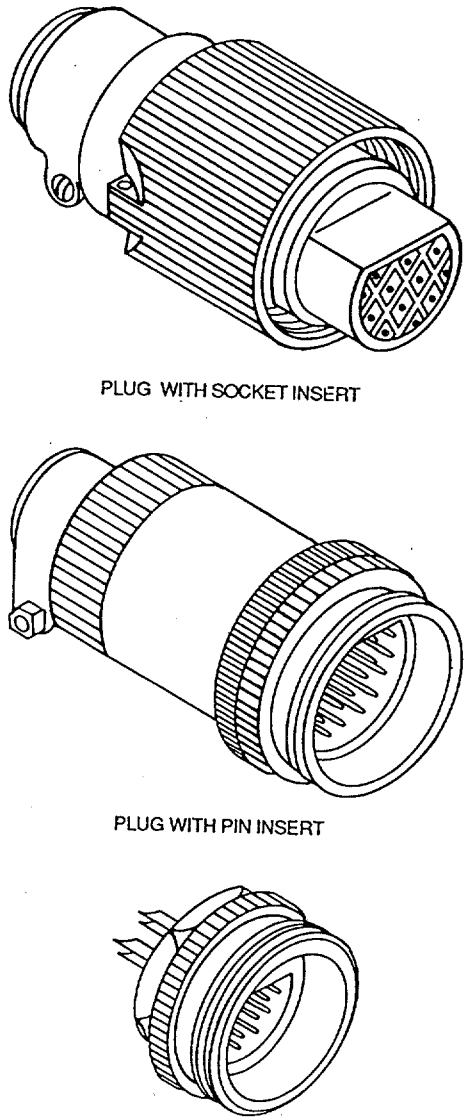

RECEPTACLE WITH PIN INSERT

Figure 3-5. Subminiature Connectors

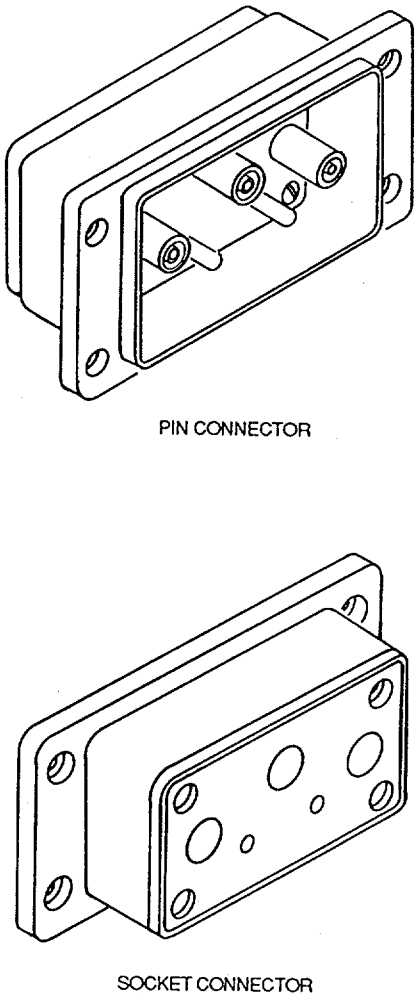

Figure 3-6. Rectangular Shell Connectors

(d) Potting connectors. These connectors, as shown in figure 3-7, are used only where potting is required. They are similar to other standard types except that they have a shorter body shell and include a potting boot. MS potting connectors are available in the following types:

- MS3103-a receptacle with flange for mounting to a firewall or bulkhead.
- MS25183-a straight plug used at the end of a wire or wire bundle.
- MS25183A-similarto MS25183, with the addition of a grounding screw.

b. Inspection of Connectors. Ensure reliability of connectors by seeing that the following conditions are met or that repairs are effected as required:

(1) Inspect connectors for security, evidence of overheating, and exteriors for corrosion and cracks.

(2) Replace overheated connectors. Wires leading to connectors must also be inspected for deterioration due to overheating.

(3) Replace corroded connectors. If corrosion is a recurring problem, install a potted connector.

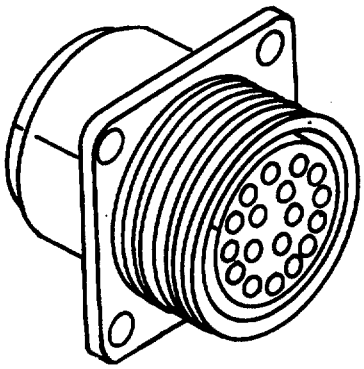

MS3103

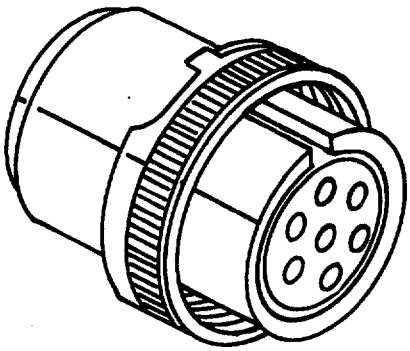

MS25183

Figure 3-7. Potting Connectors

(4) Check fuses in associated circuitry for correct current rating.

(5) Ensure installation of MS3057 cable damp adapters on all MS connectors except those that are moisture-proof.

(6) Ensure that vinyl tape is wrapped around wires in MS3057 cable damp adapters so that tightening of the cable damp adapter cap provides sufficient grip on the wires to keep tension from being applied to the connector pins.

(7) Ensure that unused plugs and receptacles are covered with moisture-proof paper, tied with waxed cord, and appropriately tagged to indicate the circuit or accessory with which associated. The units will then be secured with damps to the aircraft structure or to other wiring that is properly anchored.

(8) Ensure that the coupling nut of AN connectors is lockwired as required by the applicable aircraft maintenance handbook.

(9) Ensure that moisture-absorbent type material is not used as fill for MS3057 damps or adapters.

(10) Ensure that there is no evidence of deterioration of potting compound in potted connectors.

(11) Replace cracked dielectric inserts.

c. Installation of Connectors on Wires. The following paragraphs describe how solders and other fastening means are matched to the wire type and to the installation as follows.

(1) Soldering. Soldering is used for tin-coated copper wire, coaxial, cable, and silver-coated copper wire.

(a) Tin-lead solder. Soft solder-60/40 tin-lead (Federal Specification QQ-S-571, composition Sn 60) is used for fin-coated copper wire and for coaxial cable.

(b) Lead-silver solder. Soft solder-lead-silver (Federal Specification QQ-S-571, composition Ag 2.5 or Ag 5.5) is used for silver-coated copper wire.

NOTE

Solder cup contacts are silver or gold plated to provide low contact resistance. Silver plated contacts have pretinned solder cups. Gold plated contacts are not pretinned because the gold prevents oxidation and is therefore always easy to solder.

(2) Crimping. Crimp connections are used for nickel-dad copper wire, and tin, silver, or nickel coated copper wire.

3-4. Electrical System Components. Various electrical system components used in Army aircraft are explained in the applicable maintenance manual.

a. Storage Battery. The battery provides engine starting power, back-up emergency power, and gun drive power during firing of the turret weapons. The battery installation usually includes vent tubes, eyebolts for attaching tiedown rods, and a battery cable.

(1) Inspection. Inspect for corrosion, overheating, and overcharging. Every 120 days or every 100 flight hours, remove the battery and return to direct

support on direct exchange basis. TM 11-6140-203-23 provides instructions for the proper maintenance of aircraft nickel-cadmium batteries.

NOTE

If the battery being replaced exhibited any signs of overheating or overcharging (e. g., fumes or vapor coming from the vent tubing, free electrolyte is present inside the case, etc.) adjustment of the voltage regulator should be checked/adjusted in accordance with applicable maintenance manual.

(2) Cleaning. Clean battery in accordance with TM 11-6140-203-23. Clean battery compartment in accordance with TM 1-1500-344-23.

b. Relays. Army aircraft use generator field, reverse current, bus control, non-essential bus, and electronic/solid state relays. Relays are used for remote control of circuits carrying heavy currents. Two relay types are shown in figure 3-8.

(1) Inspection. Inspect contact points for corrosion.

(2) Replacement criteria. Replace when contact points are corroded beyond depth of pin plating.

c. Inverters. Inverters, as shown in figure 3-9, are sometimes used to convert aircraft dc power to ac power. The ac power is mainly used for instruments, radios, radar, lighting, weapons, and other accessories.

(1) Types. There are two basic types of inverters: the rotary and the static. Either type can be single phase or multiphase.

(2) Inspection. Use the applicable aircraft maintenance manual for inspection of inverters. General inspection procedures are as follows:

(a) Inspect case for cracks or damage.

(b) Inspect electrical connectors for broke pins or cracked connector inserts.

(c) Check for bonding and security mounting.

(d) Check for faulty operation.

(3) Adjustment. Usually, no adjustments can be made. (Refer to TM 11-6130-385-34).

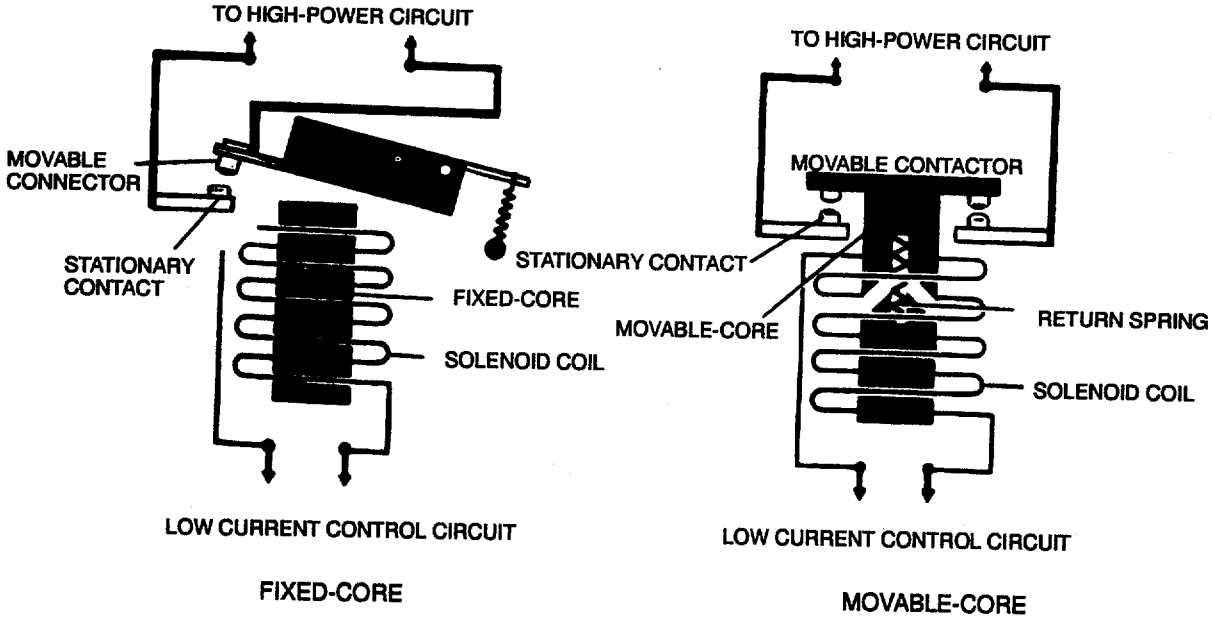

Figure 3-8. Typical Relays

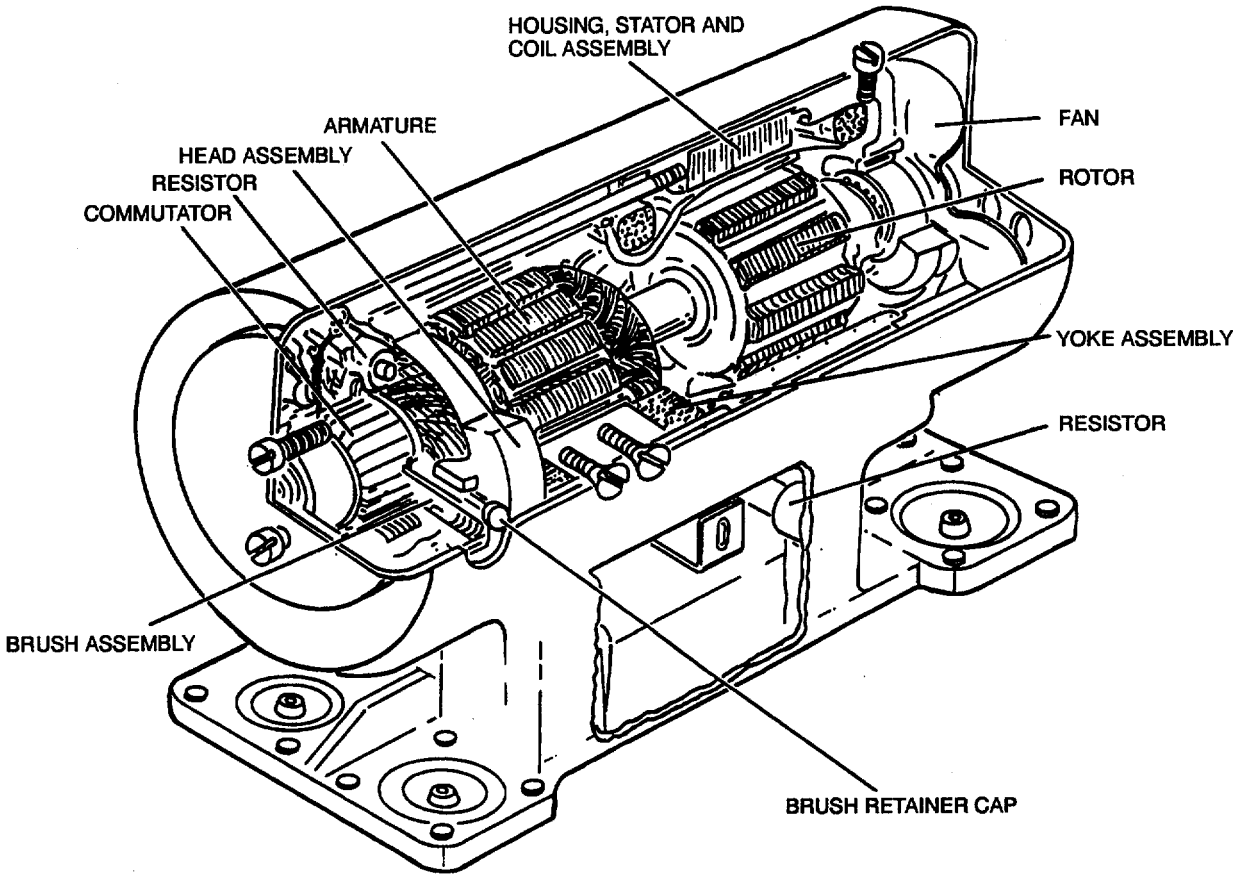

Figure 3-9. Inverter

(4) Replacement criteria. Inverter replacement criteria are as follows:

- Replace rotary inverters when any unusual bearing or gear noises are detected during operation.
- Replace rotary inverters when commutator bars are rough, scored, pitted, loose, high, or worn to the depth of insulating mica between bars.
- Replace rotary inverter brushes that are cracked, broken, chipped, unevenly worn, or worn beyond maximum wearing depth slot.
- Replace static inverters when electrical connectors have broken pins or cracked connector inserts.
- Replace static inverters that have cracked cases.
- Replace static inverters that fail to operate properly.

NOTE

Remove components from aircraft when replacing brushes.

d. Starters. Army aircraft are started by a device called a starter. The starter develops large amounts of mechanical energy, causing the engine to rotate.

(1) Types. The following paragraphs name various starters used with turbine engines. Turbine engine starters. Turbine engines use air-turbine (pneumatic) or electric starters. The air-turbine starter is becoming the most common type.

(2) Inspection. General inspection procedures for starters removed from the aircraft and starters installed on the aircraft are described in the following paragraphs.

(a) Starters removed from aircraft. Inspect the starter as follows:

1 Inspect starter for dents and cracks.

2 Inspect starter for stripped or damaged threads.

3 Inspect drive shaft spline for excessive wear.

4 Inspect for smooth rotation and axial/radial play of bearings.

5 Inspect electric starters for the following:

- Starter brushes for freedom of movement in brush holders.
- Brush leads for deterioration and chaffing.
- Brushes for wear.
- Commutator for evidence of arcing and presence of metal particles.

6 Inspect air-turbine starters for the following:

- Metal particles on drain plug.
- Nozzle vanes that are broken.
- Oil level.
- Extemal oil leakage.

7 Inspect hydraulic starters tor the following:

- Hydraulic fluid leakage.
- Proper operation of accumulator.

NOTE

Consult applicable maintenance manual for specific allowable limits for starter brushes.

(b) Starters installed on aircraft. Inspect the starter as follows:

1 Open engine cowling as required.

2 Inspect all parts for obvious signs of wear, cracks, distortion, corrosion, and other damage.

3 Inspect commutator for arcing and wear, using a mirror and bright light.

4 Inspect brush retainers for breaks and unseated condition, using a mirror and bright light.

5 Inspect brush heads for condition, using a mirror and bright light.

6 Inspect mounting location and torque.

7 Inspect for fluid leakage.

8 Close cowling.

(3) Replacement criteria. Starter replacement criteria are as follows:

- Replace when any unusual bearing or gear noises are detected during operation.
- Replace when commutator bars are rough, scored, pitted, loose, high, or worn to the depth of insulating mica between bars.
- Replace brushes that are cracked, broken, chipped, unevenly worn, or worn beyond maximum wearing depth slot.
- Replace when magnetic particles on drain plug are coarser than fuzzy, such as chips, slivers, etc.
- Replace when there are intemal starter malfunctions.
- Replace when seal assemblies are leaking.

NOTE

- **Remove components from aircraft when replacing brushes.**
- **If brushes are worn to or beyond allowable limits, brush leads are deteriorated, commutator shows evidence of excessive arcing, or if metal particles are present, replace the starter.**

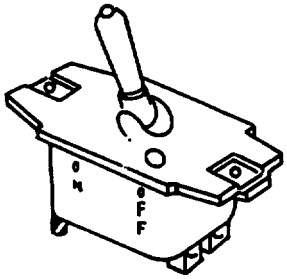

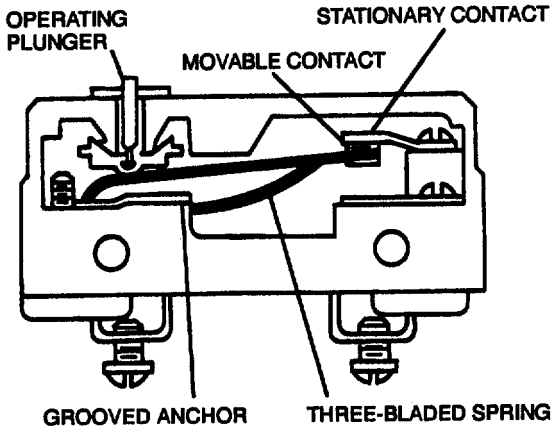

Figure 3-11. Microswitch

e. Switches. Switches control the current flow in most aircraft electrical circuits. A switch is used to start, stop, or change direction of current flow.

(1) Types. Toggle (see figure 3-10), push-button, micro switches (see figure 3-11), rotary-selector (see figure 3-12), and relay switches are used in Army aircraft. Toggle switches are used more than any other type of switch.

(2) Inspection. General inspection procedures for switches are as follows:

(a) Inspect terminals for distortion, malformed threads, and corrosion.

(b) Operate switch and observe for proper actuation.

(c) Inspect switch and mounting hardware for malformed threads and damage.

(3) Replacement criteria. Replace switches when moving parts are binding, scraping, or have dead spots as evidenced by erratic operation of their respective components. Replace switches that do not pass a continuity check.

NOTE

Replace toggle switches when dust boots are deteriorated.

f. Built-In Test Equipment. Built-in test equipment is used to test various systems while installed upon the aircraft. When button or switch is activated a light comes on to indicate system continuity or proper operation. Built-in test equipment is commonly used in communication systems, fire warning systems, and weapon systems.

g. Electronic Control Units. Electronic control units provide regulated power and contains the necessary information to control weapon systems and other electronic equipment on Army aircraft.

(1) Types. Various types are used to regulate APU, weapon systems, and other installed equipment.

(2) Inspection. General inspection procedures for electronic control units are as follows:

(a) Inspect case for cracks or dents.

(b) Inspect for secure mounting.

(c) Inspect electrical connectors for broken pins, cracked inserts, or corrosion in accordance with TM 1-1500-343-23.

(3) Replacement criteria. Electronic control units shall be replaced if case is damaged or unit is found to be defective. Perform functional check in accordance with the applicable technical manual.

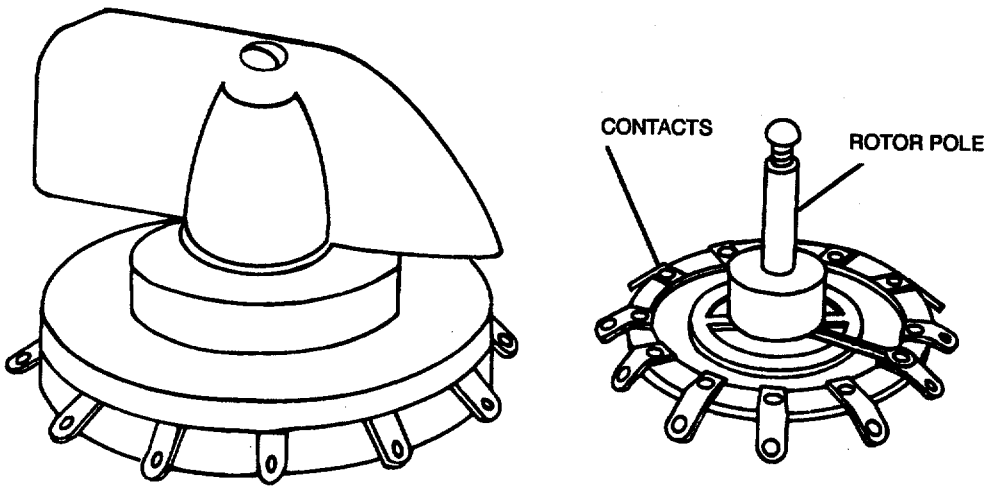

Figure 3-12. Rotary-Selector Switch

h. *Motors*. Motors transform electrical energy into mechanical energy. Many aircraft devices, from the starter to the automatic pilot, depend on motors for mechanical energy.

(1) Types. Series, shunt, and compound motors are the three basic types of dc motors. Induction and synchronous motors are the two general types of ac motors.

(2) Inspection. General inspection procedures for motors are as follows:

(a) Check the operation of the unit driven by the motor in accordance with the instructions covering the specific installation.

(b) Check all wiring, connections, terminals, fuses, and switches for general condition and security.

(c) Check brushes for condition, length, and spring tension. Minimum brush lengths, correct spring tension, and procedures for replacing brushes are given in the applicable maintenance manual.

(d) Inspect commutator for cleanness, pitting, scoring, roughness, corrosion or burning.

(e) Check for high mica (if the copper wears down below the mica, the mica will insulate the brushes from the commutator).

WARNING

Drycleaning solvent is flammable and solvent vapors are toxic. Use P-D-680, Type II Solvent in a well-ventilated area. Keep away from open flames. Avoid prolonged solvent contact with skin.

(f) Clean dirty commutators with a cloth moistened with the recommended cleaning solvent.

CAUTION

When polishing, never use emery paper since it contains metallic particles which may cause shorts. Damage to equipment may occur. When using compressed air reduce pressure to 30 psi or lower.

(g) Polish rough or corroded commutators with fine sandpaper (000 or finer) and blow out with compressed air.

(h) Inspect all exposed wiring for evidence of overheating.

(i) Adjust and lubricate the gearbox, or unit which the motor drives, in accordance with the applicable maintenance manual covering the unit.

NOTE

Lubricate only if called for by the manufacturer's instructions covering the motor. Most motors used in aircraft require no lubrication between overhauls.

(3) Replacement criteria. Motor replacement criteria are as follows:

- Replace if the insulation on leads or windings is burned, cracked, or brittle.
- Replace when any unusual bearing or gear noises are detected during operation.
- Replace when commutator bars are rough, scored, pitted, loose, high, or worn to the depth of insulating mica between bars.

NOTE

Remove motor from aircraft when replacing brushes.

- Replace brushes that are cracked, broken, chipped, unevenly worn, or worn beyond maximum wearing depth slot.

i. Thermocouples. Thermocouples are used throughout the aircraft to detect and measure temperature changes. A thermocouple, as shown in figure 3-13, is the junction of two dissimilar metals which generate a small electric current according to the rate of temperature rise. Thermocouples are commonly used in fire warning systems and temperature indicating instruments on Army aircraft.

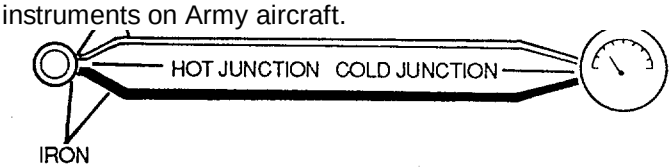

Figure 3-13. Thermocouple Circuit

j. Ignition Systems. Ignition systems on Army aircraft are used for engine starting and operation. Turbine engine ignition systems are usually operated only for a brief period during the starting cycle, during takeoff and landing, and during flight in bad weather (i.e., icing conditions). Turbine engines use capacitor or electronic ignition systems.

(1) Troubleshooting. Use applicable aircraft maintenance manuals to troubleshoot aircraft ignition systems. Table 3-3 is an example of a typical troubleshooting chart for an Army aircraft ignition system.

(2) Replacement criteria. Refer to applicable aircraft maintenance manual for replacement criteria.

k. Lighting Systems. Army aircraft lighting systems include cockpit lights, instrument panel and console lights, caution and warning light systems, position lights, anti-collision light, searchlight, and transmission oil level lights. Instrument panel and cockpit lighting is provided to enhance night vision of the flight crew.

(1) Inspection. Inspect lights for corroded lamp socket terminals, shorted or broken wires, cracked lens, or burned out lamp bulbs.

(2) Troubleshooting. Use applicable aircraft maintenance manuals to troubleshoot aircraft lighting systems. Table 3-4 is an example of a typical troubleshooting chart for an Army aircraft lighting system.

(3) Replacement criteria. Light assembly may be repaired by replacing damaged or defective component parts. If light case is damaged beyond repair, complete unit must be replaced. Replace missing or burned out fuses, lamps, and discolored lens.

Table 3-3. Typical Ignition System Troubleshooting Chart

Condition	Isolation procedure	Corrective action
1. Igniter fails to operate when starter switch is depressed.	a. Determine that starter switch contacts are not corroded or burned.	If starter switch contacts are corroded or burned, replace switch.
	b. Determine that key lock ignition switch is functional.	If key lock ignition switch is not functioning properly, replace switch.
	c. Determine that fuel switch is functional.	If fuel switch is not functioning properly, replace switch.
	d. Ensure igniter is functioning properly.	Replace igniter as required.

Table 3-4. Typical Lighting System Troubleshooting Chart

Condition	Isolation procedure	Corrective action
1. Switch fails to operate lights.	a. Determine that lighting switch/rheostat is functioning properly.	If lighting switch/rheostat is functioning properly, replace light.
2. One light dim or out intermittently.	a. Check that light is properly grounded.	If lighting is not properly grounded, remove light and clean ground.
	b. Check for corrosion in light socket.	Clean light socket terminals or replace light if required.

CHAPTER 4
INSTRUMENT SHOP

4-1. General Shop Rules. The maintenance instructions and procedures contained in this chapter are general in nature and apply to instruments installed in Department of the Army aircraft. Specific maintenance instructions that are peculiar to particular instruments are contained in applicable aircraft maintenance manuals and instrument overhaul manuals and will be used, when specified, in conjunction with instructions contained in this chapter. The practices and procedures described in this chapter pertain to the manufacturing and repair functions of aviation activities and are applicable to all levels of maintenance. Because of the many types of Army aircraft, each shop within the manufacturing and repair section must, of necessity, have personnel trained in general practices and procedures to the extent that different type and model aircraft do not upset a smooth running shop.

a. Responsibility. All supervisory personnel are responsible for a continuing and effective shop safety program. To implement and maintain this program, shop supervisors will utilize bulletin boards, signs, and any other effective method. Shop personnel will cooperate in the shop safety program by making helpful recommendations, and continually exercising care and caution in the operation of all shop equipment. All shop personnel will strive to improve the safety program and be especially alert to observe and correct hazardous conditions and unsafe shop practices. All accidents, no matter how minor, shall be reported to the shop supervisor, and all published instructions regarding safety shall be strictly adhered to. Also, safety engineers and safety officers will ensure that proper safety procedures are adhered to in accordance with AR 385-10, Army Safety Program; AR-385-30, Safety-Color Code Markings and Signs; The Occupational Safety and Health Act of 1971, OSHA 1910.251; all applicable fire codes, NFPA 410; and other accepted civilian and military safety practices.

b. Shop Housekeeping. Housekeeping is the yardstick by which the shops are judged. A clean, well-arranged shop is a safe shop and reflects credit on all personnel concerned with its operation. The following shop practices shall be observed:

(1) Oil pans or drip pans shall be used where leaking oil, grease, and similar materials may cause hazardous accumulations on equipment or floors. All spills shall be cleaned up immediately. Approved sweeping compound may be used to remove these materials from the floor.

CAUTION

Floors shall not be cleaned with volatile or flammable liquids. A flammable film may remain and cause a fire hazard.

(2) Floors shall be maintained smooth and clean, free of all obstructions and slippery substances. Holes and irregularities in floors shall be repaired to maintain a level surface free from tripping hazards.

(3) All unnecessary materials on walls shall be removed and projections shall be kept to a minimum.

(4) Aisles shall be clearly defined and kept free of hazardous obstructions. Where possible, aisles shall be suitably marked by painting.

(5) All machines, work benches, aisles, etc., shall be adequately illuminated.

c. Equipment Safety. Unsafe equipment shall be reported immediately. The following equipment safety practices shall be observed:

(1) Machines shall be located to provide operators with sufficient space to handle materials and perform job operations without interference.

(2) Bolt down all machinery that can move or walk due to vibration (drill press, bench grinder, etc.).

(3) Substantial low resistance conductors shall be used to ground all stationary and portable machines, equipment, or other devices in which static charges may be generated, or which require electrical circuits of a hazardous nature.

(4) Shop machinery shall be operated only by qualified personnel observing safe practices.

(5) Safety devices, such as guards, interlocks, automatic releases, and stops, shall always be kept in operating condition.

(6) Ensure that all unauthorized personnel are clear of area before opening valves or energizing electrical circuits for starting machinery.

(7) Suitable mechanical guards, such as enclosures or barricades, shall be permanently installed on all machinery not already equipped with such to eliminate danger of injury from moving parts.

(8) Machinery shall not be adjusted, repaired, oiled, or cleaned while machine is in operation or power is on.

(9) Personnel operating machinery shall wear protective clothing as prescribed. A protective face shield or goggles shall be worn when operating a grinder regardless of whether grinder is equipped with attached shields.

(10) Jewelry shall not be worn while performing any maintenance.

(11) All electrical binding posts shall be insulated, covered, and clearly marked with voltage and current values.

(12) Do not lay soldering irons down except on a holder. Always unplug soldering irons before leaving work stations. Soldering irons shall not be left on for extended periods.

(13) Shop humidity should not be higher than 50 percent, and temperature should be maintained at approximately 77 °F (25 °C).

(14) Shop must be kept as clean and dust-free as possible.

d. Fire Safety. A constant vigilance must be maintained to seek out fire hazards. Fire hazards are constantly present in the shop where sparks, friction, or careless handling can cause an explosion that may destroy equipment or buildings, and injure or kill personnel. The following fire safety practices shall be observed:

(1) NO SMOKING signs shall be placed in areas where smoking could create a fire hazard.

(2) Personnel shall be trained in the use, knowledge, and location of shop fire fighting equipment.

(3) Each shop shall be equipped with fire extinguishers suited for type fire most likely to occur.

(4) Use correct fire extinguisher for class of fire as follows:

- Class A fire (wood, paper, trash, etc). Use water or bromotrifluoromethane fire extinguisher.
- Class B fire (oil, paint, fuel, grease, etc.). bromotrifluoromethane or carbon dioxide fire extinguisher, or dry chemical extinguisher with Class B rating.
- Class C fire (electrical equipment). Use bromotrifluoromethane or carbon dioxide fire extinguisher, or dry chemical extinguisher with Class C rating.
- Class D fire (combustible metals) magnesium, titanium, zirconium, sodium, lithium, and potassium. Use dry powder-type fire extinguisher.

(5) Oily waste, rags, and similar combustible materials shall be discarded in self-closing metal containers which shall be emptied daily.

(6) Flammable materials shall not be stored in the shop.

(7) Use only approved cleaning solvents.

4-2. Maintenance of Shop Equipment. Maintenance of instrument shop equipment is covered in the following paragraphs. The instructions and procedures are general in nature. Specific maintenance instructions that apply to particular pieces of equipment are contained in applicable operation and service instructions manuals.

a. Manometers. A manometer, as shown in figure 4-1, measures pressures, and is used for testing and calibrating differential and absolute pressure instruments such as altimeter, airspeed indicators, rate-of-climb indicators, and suction gauges. Exercise care when reading a manometer, because curvature of the liquid level varies for mercury and water, as shown in figure 4-2.

(1) Inspection. Inspect manometers for damage using the following procedures:

(a) Inspect glass cover for breaks and chips.

(b) Inspect glass tube for scratches and dirt.

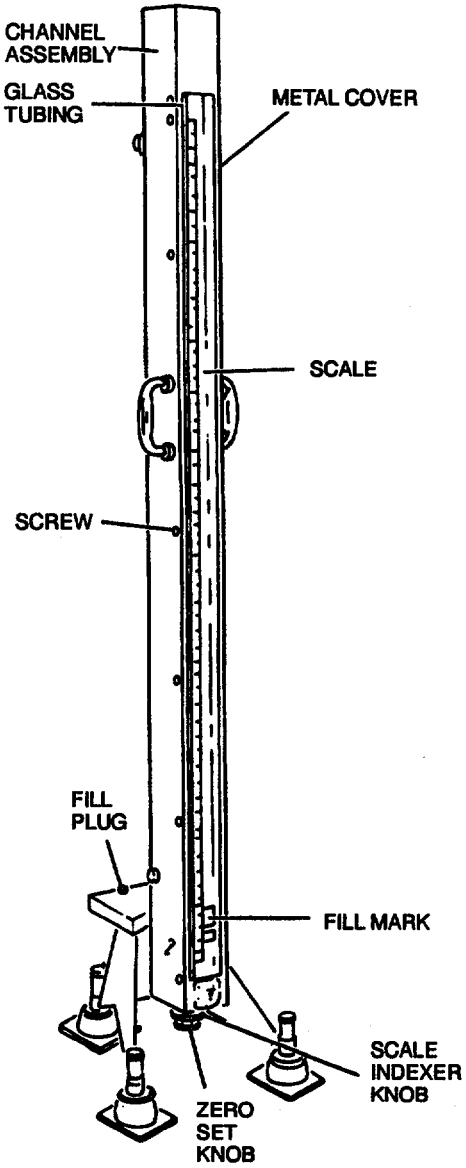

Figure 4-1. Manometer

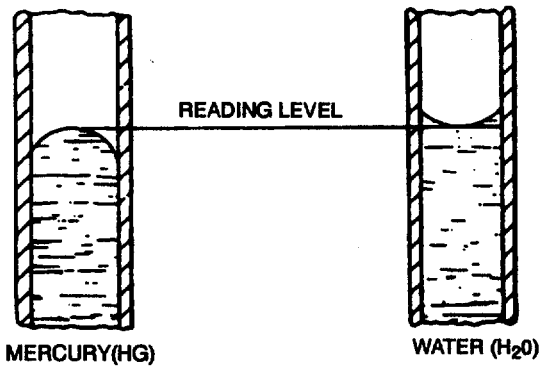

Figure 4-2. Manometer Reading Level

WARNING

A scratched tube may shatter under relatively low internal pressure.

(2) Cleaning. When visually determined as necessary, periodically clean manometer using the information provided in the following paragraphs.

(a) Mercury cleaning. Use the following procedures tor mercury cleaning:

WARNING

Be extremely careful when handling mercury. A very small amount of mercury may produce hazardous vapors. For methods that are used to dean up mercury spillage, see paragraph 4-2a (6).

1 Clean mercury by washing in a solution of nitric acid, Federal Specification O-N-350 (10 percent acid and 90 percent distilled water), or a solution of sulfuric acid, Federal Specification O-S-09 (80 percent acid and 20 percent distilled water).

2 Using apparatus shown in figure 4-3, pour mercury through funnel and filter paper and allow to pass through acid solution.

3 After mercury collects at bottom of glass tube, open pinch cock and let dean mercury pass into beaker. Control pinch cock carefully to prevent acid solution from entering beaker.

4 Next, pass clean mercury through distilled water. Place beaker of dean mercury on a sheet of asbestos and heat until dry over an open flame not to exceed 230°F (110°C).

(b) Manometer tube cleaning. Use the following procedures for manometer tube cleaning:

CAUTION

When manipulating swab inside the glass tubing, take care not to scratch the tube bore. A scratched glass tube may shatter under relatively low pressure.

1 Clean manometer tubes using a swab attached to a medium stiff piano wire. First swab out

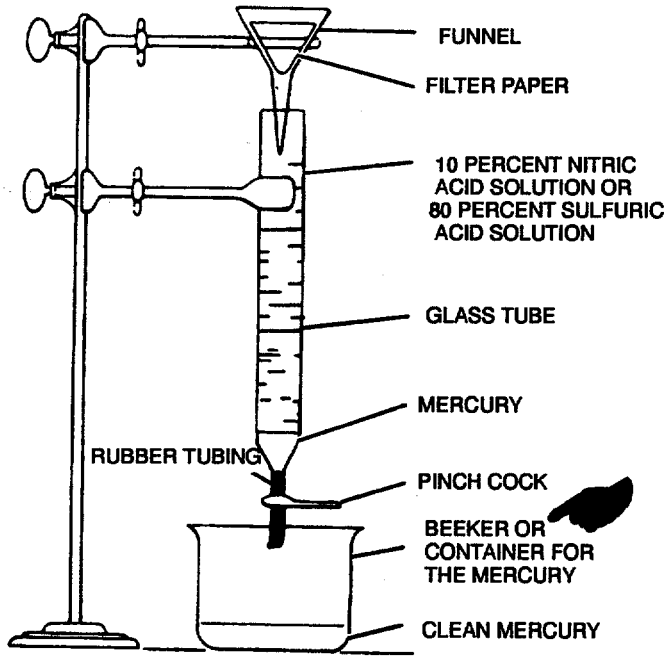

Figure 4-3. Mercury Cleaning Apparatus

tube with solution of strong soap and ammonia, Federal Specification O-A-445.

2 Next swab tube with a solution of nitric acid, (25 percent acid and 75 percent distilled water).

3 Rinse cleaned tube with distilled water and dry with ethyl alcohol, Federal Specification O-E-760, Type II.

(3) Reservoir servicing. Fill reservoir when required using the following procedures:

CAUTION

The fill mark is located on a plate, or plates, near the bottom of the manometer scale. Either a water fill or a mercury fill plate or both may be used. The presence of either or both plates indicates the materials of construction used for parts that come in contact with the indicating fluid and indicates what fluids may safely be used in the manometer. Improper fluid may cause damage to manometer.

(a) Remove fill plug from well and ensure drain plug is tight.

(b) Pour indicating fluid into the well to bring level up to the fill mark designated by the fill plate of the liquid being used.

NOTE

Keep manometer reservoirs filled to specified level (mercury or water). When water is used, add a small amount of aniline dye, MIL-A-10450 (usually red), to facilitate quick and accurate readings.

(4) Operating procedures. With suitable connections made and the manometer adjusted, apply pressure (or vacuum) to the manometer and the instrument being tested. Gradually apply the pressure covering the entire instrument range and record comparative readings. Refer to TM 55-6685-201-12.

(5) Safety practices. All of the cleaning agents except water are toxic and should be used with care.

WARNING

All except water and carbon tetrachloride are highly flammable. Use in well-ventilated area, avoid inhalation of fumes and skin contact. When mixing acid and water together, always pour the acid into the water. Never pour water into acid. Avoid skin contact with the acid and with the mixture. Avoid skin contact with the alcohol used for a rinse. Do not drink the alcohol: acute illness and death may result.

(6) Mercury spill procedures. Do the following whenever mercury is spilled:

(a) Deactivate equipment, give the alarm, and activate exhaust systems which exhaust room air to the outside.

(b) Deactivate air-conditioning systems. Close vents and doors that would allow mercury fumes and vapors to enter other work areas.

(c) Leave the area and take action to assure that personnel are kept out of the contaminated area.

(d) Contact safety specialist and medical personnel to determine the extent of contamination and corrective procedures to follow. A mercury vapor detector will be used to monitor the air in areas where mercury contamination is suspected. Operations will not be resumed until the concentration of mercury vapor drops below 0.05 milligram per cubic meter.

(e) Recover visible droplets of mercury with a mercury vacuum cleaner, mercury scoop, or a suction device equipped with a water trap. The contaminated areas should then be coated with a mercury suppressant, such as one percent calcium polysulphide, flours of sulfur, or equivalent; then carefully sweep and pick up contaminated suppressant materials, and wet-mop the area. The decontaminants do not remove mercury but coat the droplets and thus reduce volatilization of the mercury. Monitoring of the area with a mercury vapor detector should be performed to determine the thoroughness of the decontamination procedures.

(f) Air-conditioning systems of Sheffield Modulabs will be deactivated until contaminated areas have been decontaminated. Area will be monitored with a mercury vapor detector to determine thoroughness of decontamination.

(7) Maintenance. To ensure that the manometer is ready for operation at all times, it must be inspected systematically before, during, and after operation. Defects should be discovered and corrected before they result in serious damage or failure. Defects or unsatisfactory operating characteristics beyond the scope of the operator to correct must be reported at the earliest opportunity to organizational maintenance. Responsibility for performance of preventive maintenance services rests not only with the operator, but with the entire chain of command from section chief to commanding officer.

b. Vacuum Chambers. Vacuum chamber maintenance procedures are covered in the following paragraphs.

(1) Inspection. Inspect door seal for defects or damage. When seal is damaged to the extent that it will not seal properly, it shall be replaced. A thin coat glycerol, Federal Specification O-G-491, may provide a temporary seal when defects are slight.

WARNING

Drycleaning solvent is flammable and solvent vapors are toxic. Use P-D-680, Type 11 Solvent in a well-ventilated area. Keep away from open flames. Avoid prolonged solvent contact with skin.

(2) Cleaning. Periodically clean vacuum chamber with a cloth dampened in drycleaning solvent, Federal Specification P-D-680, and wipe dry with a clean cloth.

c. Turntable Instrument Tester. The turntable instrument tester, as shown in figure 4-4, is used for testing gyroscopic instruments that are not required to indicate aircraft attitude.

(1) Inspection. Periodic inspection of the unit is required after every 200 hours of operation. The only inspection required is for chipped, broken, or cracked gears and components.

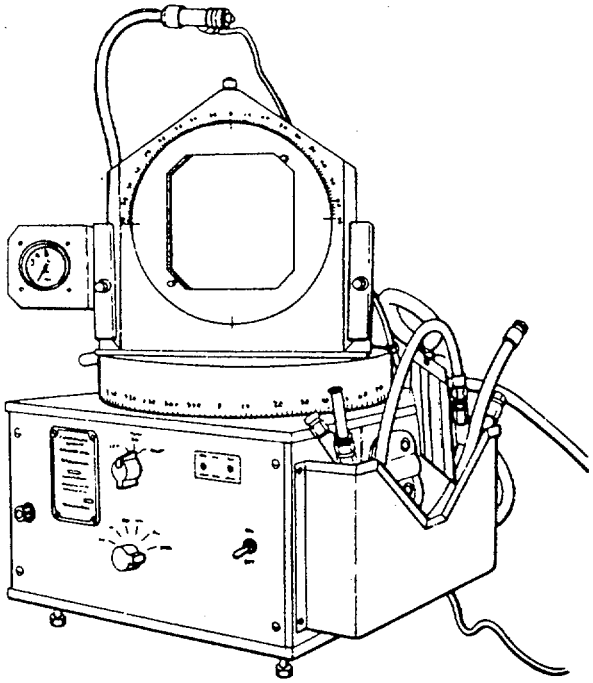

Figure 4-4. Turntable Instrument Tester

WARNING

Drycleaning solvent is flammable and solvent vapors are toxic. Use P-D-680, Type II Solvent in a well-ventilated area. Keep away from open flames. Avoid prolonged solvent contact with skin.

(2) Cleaning. Clean turntable assembly periodically with cloth dampened in drycleaning solvent, Federal Specification P-D-680, Type II, and wipe dry with a clean cloth.

(3) Operating procedures. Refer to TM 55-4920-377-1 3&P for tester operating procedures.

(4) Safety practices. The following general safety practices shall be observed:

- Do not use any other electrical power except 115 vac at 60 Hz. Other frequencies will alter the operation of the turntable.
- Do not over tighten gear clutch when making adjustments.

(5) Maintenance. The following maintenance procedures are for turntable instrument testers:

(a) Using 1 drop of lubricating oil, MIL-L-8383, periodically lubricate sleeve bearings.

(b) Lubricate worm and worm wheel gear teeth with grease, MIL-G-23827.

(c) Lubricate gear shaft collar with grease, MIL-G-23827.

d. Scorsby Base. The Scorsby base, as shown in figure 4-5, is used as a primary test apparatus for testing gyroscopic instruments.

(1) Inspection. Inspect the Scorsby base using the following procedures:

(a) Inspect fan belt once a month for wear and looseness. Replace fan belt if worn or loose.

(b) Inspect motor for smooth operation. Replace motors that do not operate smoothly.

WARNING

Drycleaning solvent is flammable and solvent vapors are toxic. Use P-D-680, Type II Solvent in a well-ventilated area. Keep away from open flames. Avoid prolonged solvent contact with skin.

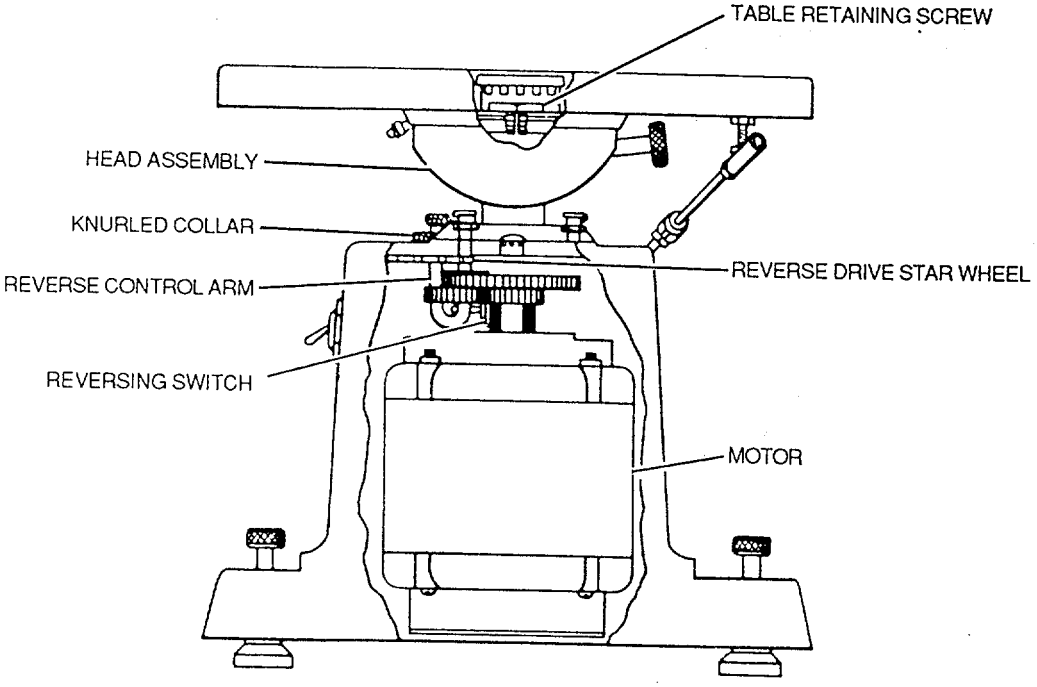

Figure 4-5. Scorsby Base

(2) Cleaning. Clean all exposed surfaces with a cloth moistened in drycleaning solvent, Federal Specification P-D-680, Type II, and wipe dry with a dry clean cloth.

(3) Operating procedures. Refer to TM 55-4920-229-12 for proper operating procedures.

(4) Maintenance. Maintenance of the Scorsby base is as follows:

NOTE

The oil in gear reducer should flow slightly when petcock is opened.

(a) When oil does not flow, add oil, Federal Specification VV-L-1071, until proper level is reached.

(b) Lubricate two ball joints which support head of Scorsby base with grease, MIL-G-23827.

e. Pitot Static System Tester. The tester is a portable, self contained vacuum and pressure tester whose purpose is the testing of aircraft altimeters, rate of climb indicators, and fuel pressure gauges.

(1) Inspection. Inspect for defects, damaged leads, broken connections, and evidence of leakage.

WARNING

Drycleaning solvent is flammable and solvent vapors are toxic. Use P-D-680, Type 11 Solvent in a well-ventilated area. Keep away from open flames. Avoid prolonged solvent contact with skin.

(2) Cleaning. Clean with a cloth moistened in drycleaning solvent, Federal Specification P-D-680, Type II, and wipe dry with a clean cloth.

(3) Operating procedures. Refer to TM 55-4920-231-14 for proper operating procedures.

(4) Safety practices. Secure all connections to prevent leakage or loosening due to vibration. Remove sleeve from pitot tube and secure all connections to prevent leakage or loosening due to vibration.

(5) Maintenance. To ensure that the equipment is ready for operation at all times it must be inspected systematically so that defects may be discovered and corrected before they can result in serious damage or failure. Defects discovered during operation of unit will be noted for future correction to be made as soon as operation has ceased, or operation will be stopped if defect will cause damage to equipment, should operation be continued. After operation, services will be performed at intervals based on normal operation of equipment, reducing interval to compensate for abnormal conditions. Defects or unsatisfactory operation beyond the scope of the operator to correct must be reported at earliest opportunity. Maintenance procedures are covered in applicable maintenance manuals.

f. Jetcal System Tester. A jetcal tester, as shown in figure 4-6, is a portable instrument made of aluminum, stainless steel, and plastic. The major components of the analyzer are the thermocouple, rpm, Exhaust Gas Temperature (EGT) indicator, resistance, and insulation check circuits, and the potentiometer, temperature regulators, meters, switches, and all the necessary cables, probes, and adapters for performing all tests. The jetcal tester is used to analyze turbine engines.

(1) Purpose and uses. The jetcal tester may be used to:

- Functionally check the aircraft EGT system for error without running the engine or disconnecting the wiring.
- Check individual thermocouples before placement in a parallel harness.
- Check each engine thermocouple in a parallel harness for continuity.
- Check the thermocouples and parallel harness for accuracy.
- Check the resistance of the EGT circuit.
- Check the insulation of the EGT circuit for shorts to ground, or for shorts between leads.
- Check EGT indicators (either in or out of the aircraft) for error.
- Determine engine rpm with an accuracy of (± 0.1) percent during engine runup. Added to this is the checking and troubleshooting of the aircraft tachometer system.

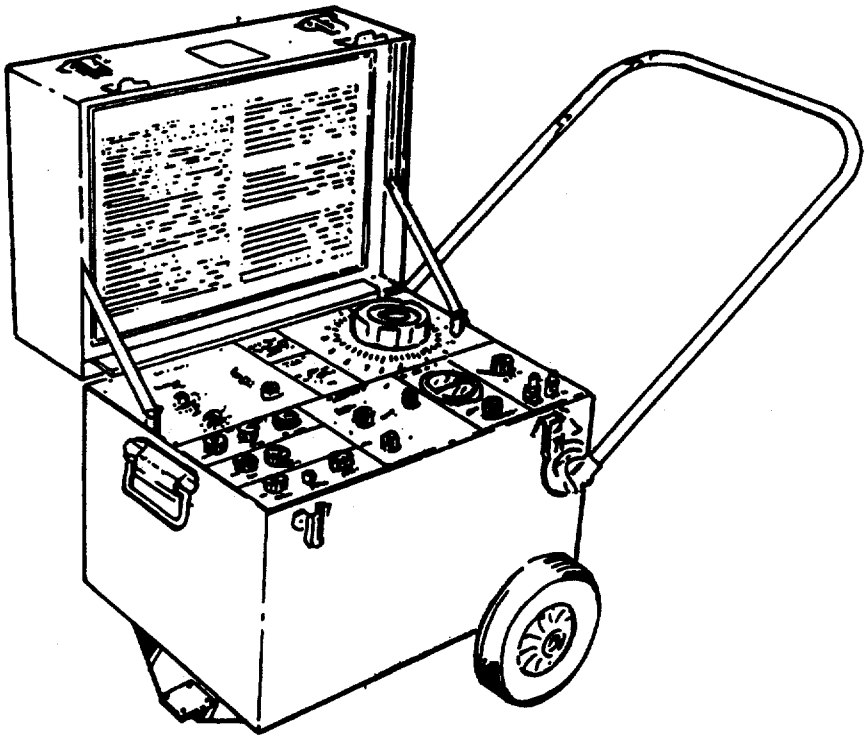

Figure 4-6. Jetcal Tester

- Establish the proper relationship between the EGT and engine rpm on engine runup during tabbing (micing) procedures by the rpm check (takcal) and potentiometer in the jetcal analyzer. (Tabbing procedures are those procedures followed when adjusting fixed exhaust nozzle exit areas.)
- Check aircraft fire detector, overheat detector, and wing anti-icing systems by using tempcal probes.

WARNING

Drycleaning solvent is flammable and solvent vapors are toxic. Use P-D-680, Type II Solvent in a well-ventilated area. Keep away from open flames. Avoid prolonged solvent contact with skin.

(2) Cleaning. Clean jetcal tester with a cloth moistened in drycleaning solvent, Federal Specification P-D-680, Type II, and wipe dry with a dean cloth.

(3) Operating procedures. Refer to step-by-step procedures on the instruction plate of the jetcal tester.

(4) Safety practices. Observe the following safety practices while operating the jetcal analyzer:

- Never use a volt-ohmmeter to check the potentiometer for continuity. If a volt-ohmmeter is used, damage to the galvanometer and standard battery cell will result.
- Check the thermocouple harness before engine runup. This must be done because the circuit must be correct before the thermocouples can be used for true EGT pick up.
- For safety, ground the jetcal analyzer when using an ac power supply. Any electrical equipment operated on ac power and utilizing wire-wound coils such as the probes with the jetcal analyzer, has an induced voltage on the case that can be discharged if the equipment is not grounded. This condition is not apparent during dry weather, but on damp days the operator can be shocked slightly. Therefore, for protection of the operator, the jetcal analyzer should be grounded using the pigtail lead in the power inlet cable.

- Use heater probes designed for use on the engine thermocouples to be tested. Temperature gradients are very critical in the design of heater probes. Each type of aircraft thermocouple has its own specially designed probe. Never attempt to modify heater probes to test other types of thermocouples.
- Do not leave heater probes assemblies in the tailpipe during engine runup.
- Never allow the heater probes to go over 1,652°F (900°C). Exceeding these temperatures will result in damage to the jetcal analyzer and heater probe assemblies.

(5) Maintenance. Apply a few drops of oil to hinges, then wipe off excess oil with clean cloth. With wheels removed, apply a light coating of grease to wheel mount axles.

4-3. Instruments and Instrument System Maintenance. General maintenance procedures for instruments and instrument systems are covered in the following paragraphs. General precautions are as follows:

- Instruments are delicate devices and will always be handled very carefully.
- Always replace instruments with another of like kind and type, or a suitable substitute as listed in applicable repair parts appendixes and special tool lists.
- Configuration of aircraft (location and positioning of instruments or components) will not be altered unless authorized by AVSCOM.
- Never exceed pressures or values specified in publications dealing with test procedures for that particular instrument.
- Thread compound will be used on all threaded coupling connectors (except electrical) of the instrument system. Thread compound shall be applied so that entrance into gauge is prohibited (i.e., apply a light coating to two threads of male end, starting at second thread). Pliers and adjustable wrenches will not be used on coupling connectors.

a. Inspection of Instrument Systems. Instrument systems will be inspected and functionally checked in the aircraft. However, indicators or transmitters may be removed from the aircraft and bench checked whenever facilities permit.

b. Inspection Requirements. Use the following paragraphs to inspect instruments.

(1) Range markings. Instruments must be range-marked in accordance with applicable operator manual and TM 55-1500-345-23.

(2) Mounting. Shock-mounted instrument panels will be free to move in all directions with a minimum clearance of 1/4 inch between panel and its supporting structures. When panel does not have specified clearance, inspect rubber shock mounts for looseness, cracks, or deterioration. Loose mountings will be tightened, and cracked or deteriorated mountings will be replaced.

(3) Connecting lines. Wiring or flexible tubing behind instrument panel will be sufficiently long to permit easy connection to indicators (a minimum of 4 inches in front of panel). All electrical wiring will be anchored to prevent swinging or sagging, but must not interfere with free movement of shock-mounted instrument panel.

NOTE

Examine all instrument connection threadings and all line connection threadings to be sure they are the same thread. Do not force under any circumstances.

(4) Operation of instruments. Instruments must operate satisfactorily as required by applicable operator manuals. Instruments that do not operate satisfactorily will be replaced.

(5) Physical defects. Instruments with physical defects or damage must be replaced.

(6) Corrosion. Replace instrument if corrosion damage is present.

(7) Color coding. The Army uses two types of identification systems to color code the plumbing lines and electrical conduits of aircraft. The two systems used are the printed-symbolized tape system, the preferred

method, and the solid color band, the alternate method. Identification tapes will be applied to plumbing lines and electrical conduits of all Army aircraft.

(a) Printed-symbolized tape system. This latest and preferred system utilizes printed colored tape (1 inch wide) with geometrical symbols. The main function of the line is printed on the tape.

(b) Solid color band system. This alternate system consists of the use of one, two, or three bands of 1/2-inch wide solid colored tape wrapped on various lines for identification. .

c. Pitot Static System. The pitot static system, as shown in figure 4-7, consists of pitot-static tubes or pitot tubes with static pressure ports or vents and their related heaters, if any, and includes lines, tubing, water drains and traps, and selector valves. Pressure actuated indicators such as the altimeter, airspeed, and rate-of-climb indicators, and control units such as air data transducers, and automatic pilots may be connected to the system.

(1) Principles of operation. Ram pressure enters the pressure line through an opening at the forward end of pitot tube and passes through the pressure line to the airspeed indicator. Static pressure is passed through the static pressure line to the vertical velocity indicator, altimeter, and airspeed indicator static pressure connections.

(2) Inspection of System. Inspect air passages in the systems for water, paint, dirt or other foreign matter. Remove obstructions in accordance with applicable maintenance manual.

(a) Required equipment. A pitot static system tester, as shown in figures 4-8 and 4-9, is needed to complete pitot static system tests.

(b) Pitot line leak test procedures. Pitot line leak test connections are shown in figure 4-8. Do tests using the procedures that follow:

1 Seal pitot tube drain holes air tight with pressure sensitive tape, Federal Specification A-A-883.

CAUTION

Do not apply suction to pitot lines or pressure to static lines. Damage to bellows, indicators, and computer equipment may occur.

(3) System Leak Testing. Pitot-static leak tests should be made with all instruments connected to assure that no leaks occur at instrument connections. Such tests should be made whenever a connection has been loosened or an instrument replaced. Pitot systems should be tested in accordance with the aircraft manufacturer's instructions. If the manufacturer has not issued instructions for testing pitot systems, the following may be used:

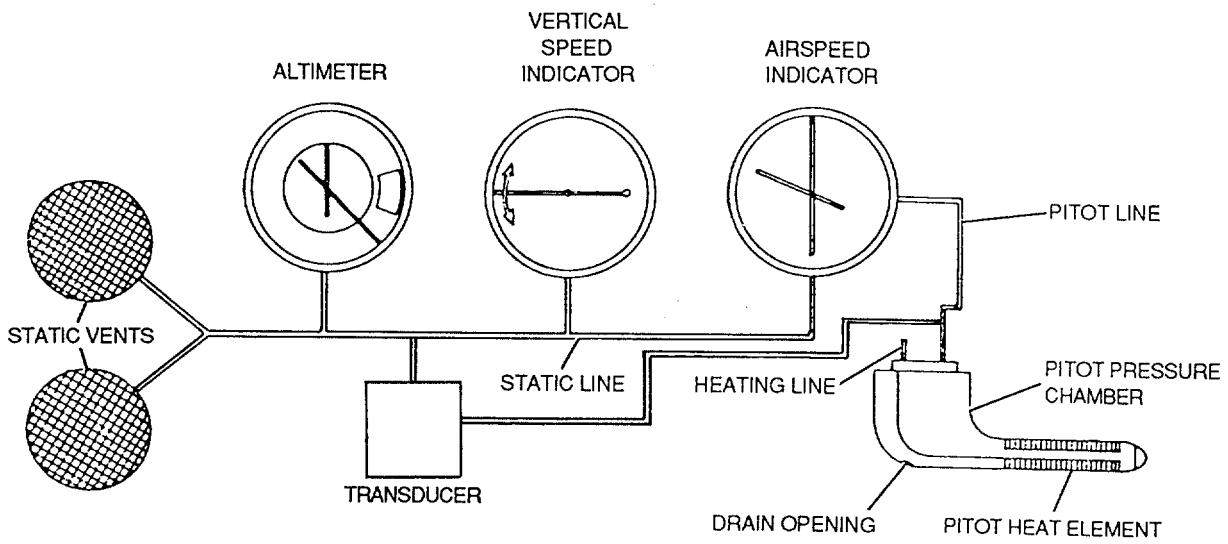

Figure 4-7. Pitot Static System

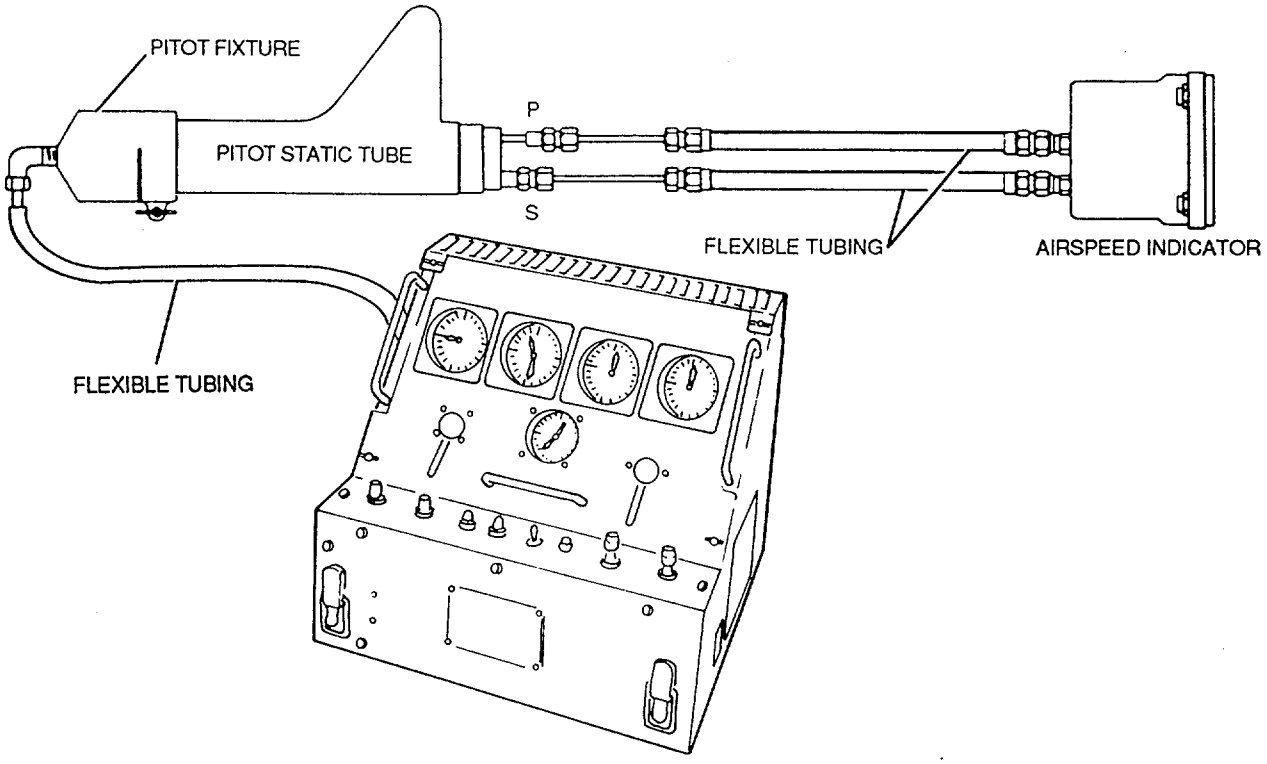

Figure 4-8. Pitot Leak Test Connections

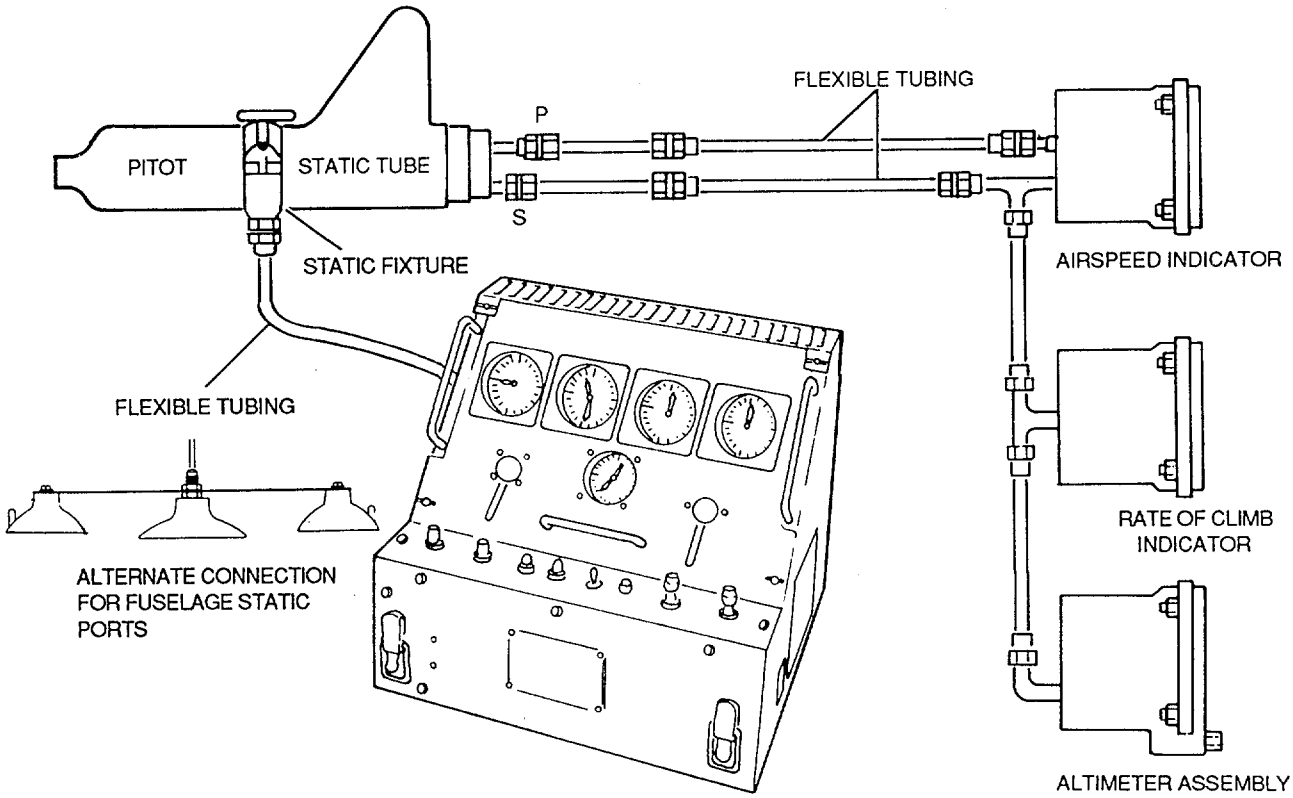

Figure 4-9. Static Leak Test Connections

2 Slowly apply pressure to pitot line until the airspeed indicator reads normal cruising speed. Use appropriate power supply in accordance with pilot-static system being tested. Pinch off pressure supply at flexible tube.

3 Tap indicator to remove friction effects. When indicator pointer drops more than 10 miles an hour (8.7 knots) in 1 minute, a leak is indicated. Repair faulty connections or cracks in pitot lines as necessary.

4 Remove test apparatus from pitot tube.

5 Remove tape from the pitot tube drain holes.

(c) Static line leak test procedures. Static line leak test connections are shown in figure 4-9. Do tests using the procedures that follow:

1 Set altimeter pointers to field elevation.

2 Tape unused static ports.

CAUTION

When applying suction to the static line, the airspeed indicator and computer equipment may be damaged.

3 Slowly apply suction to static line until airspeed indicator reaches full scale. Close vacuum source and tap altimeter at same time until rate of climb stabilizes at zero. After stabilization, the altimeter should not drop more than 100 ft. in the next minute.

4 Slowly remove suction from static lines until altimeter reads field elevation.

5 Remove test apparatus from static port.

6 Remove tape from static ports.

d. Pitot Static System Heater. Pitot static tubes, as shown in figure 4-10, are provided with heaters to prevent icing during flight. Principles of operation and testing procedures are described in the following paragraphs.

(1) Principles of operation. During ice-forming conditions, pilot heat is selected by a switch in the cockpit. Heating elements heat the pitot head to provide pitot anti-icing.

(2) Testing. Test pitot static system heater using the following paragraphs.

(a) Required equipment. No special required equipment is needed.

(b) Pitot static heater test procedures. Test using the procedures that follow:

WARNING

Exercise caution when touching pitot tube with fingers as serious burns may result.

1 Turn aircraft battery switch ON.

2 Turn pilot heater switch ON and check for heat rise by touching pitot head lightly with fingers.

3 When elements do not heat within 2 minutes, and wiring is correct, pitot head must be replaced.

e. Airspeed Indicators. Principles of operator and testing procedures are described in the following paragraphs.

(1) Principles of operation. The airspeed indicator, as shown in figure 4-11, shows the speed of the aircraft relative to the air mass through which it is flying. Each instrument is a pressure-sensitive unit actuated by the differential between impact and static air pressures. The impact (pitot) pressure is transmitted from the pitot head to the inside of the pressure-sensitive diaphragm in the instrument case, while static pressure is applied to the interior of the case.

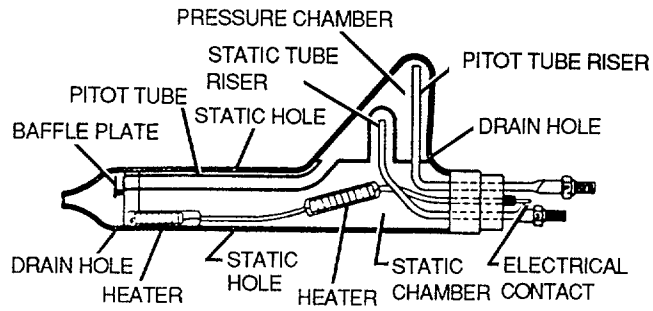

Figure 4-10. Pitot Tube

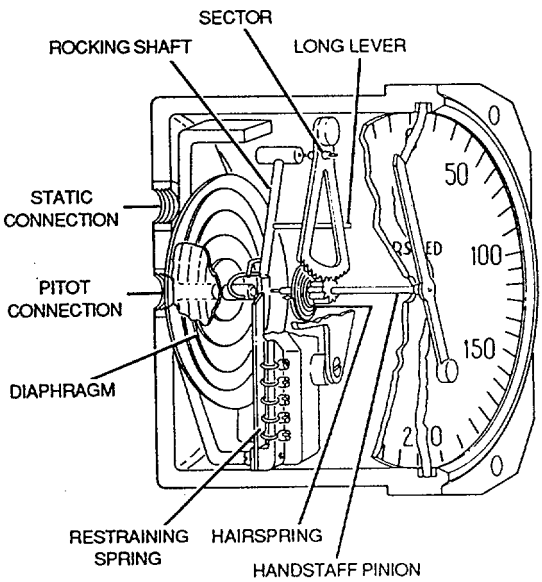

Figure 4-11. Airspeed Indicator

Movements of the capsule caused by the resulting pressure difference are converted by mechanical linkage to pointer movement over the calibrated dial. The airspeed indicator face is graduated in knots.

(2) Testing. The following paragraphs describe test procedures and replacement criteria for airspeed indicators while installed on aircraft.

(a) Required equipment. To test the airspeed indicator, use the following required equipment:

- Pitot static system tester (The tester must show evidence of current calibration)
- Adapters and fittings
- Plugs and caps

(b) Airspeed indicator test procedures. Test using the procedures that follow:

1 Disconnect pitot static lines on airspeed indicator.

2 Plug lines to prevent contamination.

3 Connect airspeed indicator to pitot static system tester.

4 Compare the reading of the installed indicator against the reading on the tester at the test points shown in table 4-1.

NOTE

- **Tests do not need to go higher than the rated speed of the aircraft.**
- **Gently tap indicator before reading.**

5 Perform pitot line leak test paragraph 4-3c(2)(b).

6 Perform static line leak test paragraph 4-3c(2)(c).

7 Disconnect pitot static system tester.

8 Connect pitot static lines to airspeed indicator.

(c) Replacement criteria. Replacement criteria are as follows:

- Replace airspeed indicator if it fails to meet the tolerances in table 4-1.

NOTE

The airspeed indicator does not always have graduations for each knot; therefore, interpret tolerances 3, 4, and 6 to retain rather than to replace indicator.

- Airspeed indicators which do not pass the performance requirements shall be turned in for overhaul.

f. Vertical Speed Indicators. Principles of operation and testing procedures are described in the following paragraphs.

(1) Principles of operation. The vertical velocity indicator, as shown in figure 4-12, located on the flight instrument panel, indicates the rate of ascent or descent in feet per minute. The pointer moves clockwise when indicating ascent and counterclockwise when indicating descent. The vertical velocity indicator incorporates two air-enclosing chambers: a pressure-sensitive diaphragm vented directly to the static line, and the air-tight case of the instrument vented to the static line through a thin-walled porcelain capillary tube.

Table 4-1. Airspeed Indicator Test Tolerances

Airspeed test (knots)	MS28045 10 to 150 (knots)	MS28021 20 to 250 (knots)	MS28046 40 to 400 points (= knots)
40	3	5	4
60	3	3	3
80	3	3	3
100	3	4	3
120	3	4	3
140	3	5	4
160		5	4
180		5	4
200		5	5
220		5	5
240		5	5
260			5
280			5
300			5
320			6
340			6
360			6
380			6
400			6

Changes in pressure resulting from changes in altitude are transmitted quickly to the inside of the diaphragm and slowly through the capillary tube to the inside of the case. This results in a pressure differential causing the diaphragm to expand or contract according to the rate of change of altitude. The motion of the diaphragm is transmitted to the pointer. When the aircraft assumes a fixed altitude, the pressure in the diaphragm and case rapidly equalize and the pointer returns to 0. An adjusting screw, located in the lower left corner, is provided for adjusting the zero indication.

(2) Testing. The following paragraphs describe test procedures and replacement criteria for vertical speed indicators while installed on aircraft.

(a) Required equipment. To test the vertical speed indicator, use the following required equipment:

- Pitot static system tester
- Adapters and fittings
- Plugs and caps

(b) Vertical speed indicator test procedures. Functionally test using a pitot and static tester.

(c) Vertical speed indicator adjustment. With all aircraft systems inoperative, set vertical velocity indicator pointer to 0 (nine o' clock position) by means of adjusting screw at lower left of instrument face.

(d) Replacement criteria. Replace indicators with dents or cracks in glass, stripped fittings, or illegible markings.

g. Altimeters. Principles of operation and testing procedures for three pointer and counter drum pointer altimeters are described in the following paragraphs.

(1) Principles of operation. Altimeters, as shown in figure 4-13, have pressure-responsive elements (aneroids) which expand or contract with the pressure change of different altitudes. The expansion or contraction of the aneroid with pressure changes actuates the linkage which is connected to the indicating hands that show altitude. A bi-metal yoke is incorporated around the aneroid to compensate for temperature effects on the metals of the aneroid mechanism.

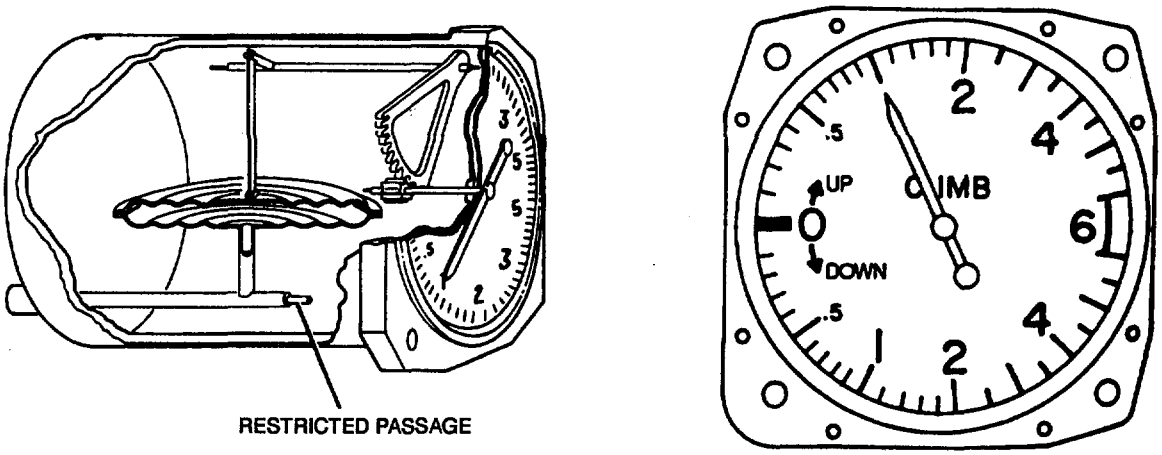

Figure 4-12. Vertical Sped Indicator

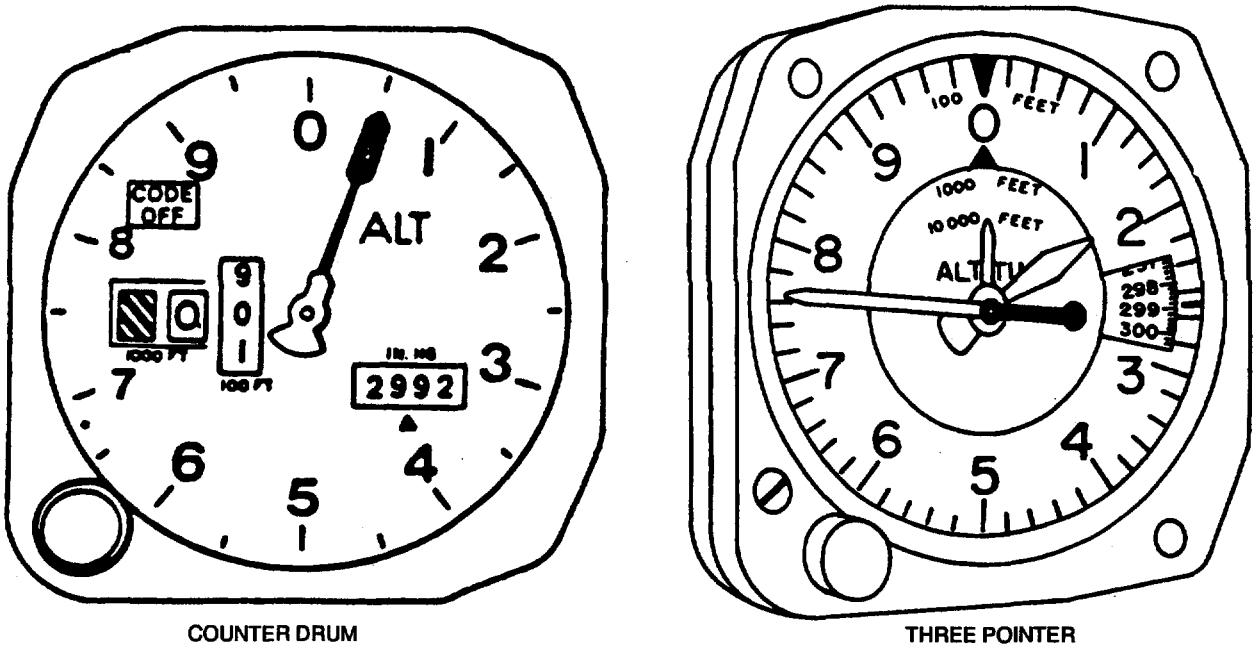

Figure 4-13. Altimeter

(2) Testing while altimeter is installed on aircraft. General test procedures are described in the following paragraphs.

(a) Leak test. Using the pitot-static system tester, test for leakage in accordance with paragraphs 4-3c (2) (b) and 4-3c (2) (c).

(b) Altimeter setting test. Altimeter accuracy can be checked by setting the altimeter at the correct barometric setting and noting field elevation by contacting control tower. Altimeter should read field elevation when correct barometric setting is used.

(3) Testing altimeter when removed from aircraft. Test procedures and replacement criteria for

three pointer and counter drum pointer altimeters are described in the following paragraphs.

(a) Three pointer altimeters. Perform the following tests in the instrument shop. Tests shall be performed at approximately 77 (±9)°F or 25 (±5)°C using a Hass Type A-1, or equivalent mercurial barometer. Unless otherwise specified, each test for performance may be conducted with the instrument subjected to vibration to remove friction effects, and with the barometric pressure scale of the altimeter set to 29.92 inches of mercury (Hg).

1 *Scale error test.* With the barometric pressure at 31.02 inches of mercury, the altimeter shall be subjected successively to pressures corresponding to the altitudes specified in table 4-2 up to the maximum altitude. The reduction in pressure shall be made at a rate not in excess of 20,000 feet per minute to within approximately 300 feet of the test point. The test point shall be approached at a rate compatible with the test equipment. The altimeter shall be kept at the pressure corresponding to each test point for at least 1 minute, but not more than 10 minutes, before a reading is taken. The error at all test points must not exceed the tolerances specified in table 4-2.

2 *Hysteresis test.* The hysteresis test shall begin not more than 15 minutes after the initial exposure of the altimeter to the pressure corresponding to the upper limit of the scale error test prescribed in paragraph 1; and while the altimeter is at this pressure, the hysteresis test shall commence. Pressure shall be increased at a rate simulating descent in altitude at the rate of 5,000 to 20,000 feet per minute until within 3,000 feet of the first test point (16,000 feet). The test point shall then be approached at a rate of approximately 3,000 feet per minute. The altimeter shall be kept at this pressure for at least 5 minutes, but not more than 15 minutes, before the test reading is taken. After the reading has been taken, the pressure shall be increased further, in the same manner as before, until the pressure corresponding to the second test point (12,000 feet) is reached. The altimeter shall be kept at this pressure for at least 1 minute, but not more than 10 minutes, before the test reading is taken. After the reading has been taken, the pressure shall be increased further, in the same manner as before, until atmospheric pressure is reached. The reading of the altimeter at either of the two test points shall not differ by more than the tolerance specified in table 4-3 from the reading of the altimeter for the corresponding altitude recorded during the scale error test prescribed in paragraph 1.

3 *After-effect test.* Not more than 5 minutes after completion of the hysteresis test prescribed in paragraph a the altimeter reading (corrected for any change in atmospheric pressure) shall not differ from the original atmospheric pressure reading by more than the tolerance specified in table 4-3.

4 *Friction test.* The altimeter shall be subjected to a steady rate of decrease of pressure approximating 750 feet per minute. At each altitude listed in table 4-4, the change in reading of the pointers before and after vibration shall not exceed the corresponding tolerance listed in table 4-4.

5 *Case leak test.* The leakage of the altimeter case, when the pressure within it corresponds to an altitude of 18,000 feet, shall not change the altimeter reading by more than the tolerance shown in table 4-3 during an interval of one minute.

6 *Barometric scale error test.* At constant atmospheric pressure, the barometric pressure scale shall be set at each of the pressures (falling within its range of adjustment) that are listed in table 4-2, and shall cause the pointer to indicate the equivalent altitude difference shown in table 4-5 within a tolerance of 25 feet.

(b) Counter drum pointer altimeters. Perform the following tests in the instrument shop. Tests shall be performed under the following conditions using a Hass Type A-1, or equivalent mercurial barometer or manometer:

- Room temperature 77 (±9)°F or 25 (±5)°C.
- Barometric pressure 29.92 inches of mercury (Hg).
- Lighting power 5.0 (±0.1) volts ac or dc or 4.0 watts maximum.
- Vibrator power 28 (±1.0) volts dc or 90.0 milliamps.

1 *Scale error test.* Connect barometer and vacuum pump to altimeter. Connect electric lines to altimeter. The scale error check (or diaphragm error check) is conducted as follows. For a period of at least 6 hours prior to testing, altimeter shall be held at atmospheric pressure. The barometric dial shall be set at 29.92 inches of mercury (Hg) and remain there throughout the test. The direction of approach in setting

Table 4-2. Scale Error (Three Pointer)

Altitude test pressure (feet)	Equivalent atmospheric pressure (mercury) (mm)	(inches)	Tolerance (± feet) at ± 25°C
0	760.00	29.921	30
500	746.37	29.385	35
1,000	732.93	28.856	35
1,500	719.70	28.335	40
2,000	706.65	27.821	40
2,500	693.80	27.315	45
3,000	681.14	26.817	45
4,000	656.38	25.842	50
5,000	632.36	24.896	55
6,000	609.05	23.978	60
8,000	564.51	22.224	70
10,000	522.65	20.577	80
12,000	483.34	19.029	90
14,000	446.46	17.577	100
15,000	428.90	16.886	105
16,000	411.90	16.216	110
18,000	379.53	14.942	120
20,000	349.25	13.750	130
22,000	320.96	12.636	140
25,000	282.03	11.103	155
30,000	225.69	8.885	180

Table 4-3. Test Tolerances (Three Pointer)

Test	Tolerance (feet)
Case leak test	±100
Hysteresis test:	
First test point (16,000)	75
Second test point (12,000)	75
After-effect test	30

Table 4-4. Friction Test Tolerances (Three Pointer)

Altitude (feet)	Tolerance (feet)
1,000	±70
2,000	70
3,000	70
5,000	70
10,000	80
15,000	90
20,000	100
25,000	120
30,000	140

the barometric dial is immaterial. The vibrator must be energized throughout this test. Beginning with the barometric pressure at 31.018 inches of mercury the altimeter shall be subjected to successively decreasing then increasing pressures corresponding to altitudes specified in table 4-6. The reduction m pressure shall be made at a rate not in excess of 10,000 feet per minute to within approximately 300 feet of the test point. The test point shall be approached at a rate compatible with

Table 4-5. Pressure Altitude Difference (Three Pointer)

Pressure (inches of mercury (Hg))	Altitude difference (feet)
28.10	-1727
28.50	-1340
29.00	-863
29.50	-392
29.92	0
30.50	+531
30.90	+893
30.99	+974

Table 4-6. Scale Error (Counter Drum Pointer)

Altitude (feet)	Equivalent pressure Inches of mercury-Hg)	Tolerance ±(feet)
-1000	31.018	±30
0	29.921	±30
500	29.385	±35
1000	28.856	±35
2000	27.821	±40
3000	26.817	±45
5000	24.896	±50
8000	22.224	±60
10000	20.577	±65
12000	19.029	±70
15000	16.886	±80
18000	14.942	±90
20000	13.750	±95
25000	11.103	±105
30000	8.885	±115
35000	7.041	±125
38000	6.097	±140
40000	5.538	±140
45000	4.355	+185
50000	3.425	±500

the test equipment. The altimeter shall be kept at the pressure corresponding each test point for at least one minute, but not more than five minutes before a reading is taken. The error at all test points must not exceed the tolerance specified in table 4-6.

2 *Hysteresis test.* The hysteresis test shall begin not more than 15 minutes after initial exposure of the altimeter to the pressure corresponding to the upper limit of the scale error test prescribed in paragraph 1. While the altimeter is at this pressure, the hysteresis test shall commence with vibrator operative. Pressure shall be increased at a rate simulating a descent in altitude at the rate of 5,000 to 20,000 feet per minute until within 3,000 feet of the first test point, table 4-7. The test point shall then be approached at a rate of approximately) 3,000 feet per minute. The altimeter shall be kept at this pressure for at least 1 minute, but not more than 15 minutes, before the test reading is taken. After the reading has been taken, the pressure shall be increased further, in the same manner as before, until the pressure corresponding to the second test point table 4-7, is reached. The altimeter shall be kept at this pressure for at least 1 minute, but not more that 10 minutes, before the test reading is taken. When the reading has been taken, the pressure shall be increased further, in the same manner as before, until third test point table 4-7 is reached. The reading of the altimeter at either of the three test points shall not differ by more than the tolerance specified in table 4-7 from the reading of the altimeter for the corresponding altitude recorded during the scale error test prescribed in paragraph 1.

3 *After-effect test.* With vibrator operative and not more than five minutes after completion of the hysteresis test prescribed in paragraph 2 the altimeter reading (corrected for any change in atmospheric pressure) shall not differ from the original atmospheric pressure reading by more than the tolerance specified in table 4-7.

Table 4-7. Test Tolerances (Counter Drum Pointer)

Test	Tolerance (feet)
Case LeakTest	100
Hysteresis Test:	
First Test Point (25,000)	60
Second Test Point (20,000)	60
Third Test Point (0)	30
After-Effect Test	30

4 *Friction stop and jump test.* The altimeter shall be tested for friction in both ascending and descending directions at the test points specified in table 4-8. With the internal vibrator energized, the pressure to the static port of the altimeter shall be applied at the rates indicated for the test points in table 4-8. The change in the indicating position of the pointer, due to apparent stopping and jumping as the counter is turning or at any other place around the dial, shall be recorded as friction and shall not exceed the tolerances specified in table 4-8, column C. This test shall be repeated with all electrical power off. The stop and jump friction for the test as specified shall not exceed the tolerances in specified table 4-8, column D.

5 *Static friction test.* At the completion of the friction stop and jump test paragraph 4, and with all electrical power off, the altimeter shall be subjected to a constant rate of decreasing pressure not exceeding 3,000 feet per minute until the pressure is within 100 feet of the tolerance listed in table 4-9 for each test point. At this time, the rate of pressure change shall be gradually decreased until the desired test point is obtained. The pressure shall then be held constant while two readings of the altimeter are taken, the first without the integral vibrator operating and the second with the vibrator operating. The difference between the two readings shall be recorded as static friction and shall not exceed the tolerances listed in table 4-9.

6 *Case leak test.* The leakage of the altimeter case, when the pressure within it corresponds to an altitude of 30,000 feet, shall not change the altimeter reading by more than the tolerance shown in table 4-7 during an interval of one minute.

7 *Barometric scale error test.* At constant atmospheric pressure, the barometric pressure scale shall be set at each of the pressures (falling within its range of adjustment) that are listed in table 4-10 and shall cause the pointer to indicate the equivalent altitude difference shown in table 4-10 within a tolerance of 25 feet.

8 *Internal lighting test.* Red and white internal lighting shall be functionally tested in accordance with applicable maintenance manual.

(c) Replacement criteria. After completion of tests, a tamper seal shall cover the baroset locking screw. An inspection sticker with date of completed bench test shall be placed on the outside of the case. Compute reinspection date from date on the inspection sticker.

h. Direct Reading Pressure Indicators. Principles of operation, types, and testing of direct reading pressure indicators are described in following paragraphs.

(1) Principles of operation and types indicators. Direct reading pressure indicators are connected directly to pressure source by tubing or flexible hose. Typical of the direct reading pressure indicators are the fuel pressure, oil pressure, hydraulic pressure, manifold pressure, and vacuum pressure.

(2) Testing. The following paragraphs describe tests and replacement criteria for direct reading pressure indicators.

(a) Pressure pointer oscillation test. When pressure indicator pointers oscillate excessively (more

Table 4-8. Friction Stop and Jump Error (Counter Drum Pointer)

Column A test point altitude (feet)	Column B rate of ascent or descent (feet per minute)	Column C tolerance vibrator operative (feet)	Column D tolerance vibrator inoperative (feet)
0	500	25	300
1,000	500	25	120
3,000	500	25	120
5,000	500	25	120
10,000	500	25	350
20,000	3,000	25	350
30,000	3,000	25	350
35,000	3,000	50	600
40,000	3,000	50	600

than one-half of the minimum scale division), examine lines and connections for security and anchorage. When lines are secure and anchored properly and pointer still oscillates, replace indicator.

(b) Zero check test. At zero indication, errors must not exceed tolerances specified in table 4-11. When tolerances listed in table 4-11 are exceeded, indicator shall be replaced.

i. Remote Reading Pressure Indicators. Principles of operation, types, and testing of remote reading pressure indicators are described in the following paragraphs.

(1) Principles of operation and types. Remote reading pressure indicators are connected indirectly to the pressure source by electrical transmitters and wiring. The transmitters are connected directly to the pressure source by tubing or hose. As the pressure increases or decreases, the mechanism in the transmitter is displaced. When the mechanism is displaced, a signal is sent to the indicator through the electrical wiring which causes the mechanism in the indicator to turn to a corresponding position as that of the transmitter, thus giving an indication of the pressure being measured. This type system is called self-synchronous (autosyn), and may be adapted to practically all pressure measuring needs. The autosyn system of transmitting pressure readings may be incorporated for use with oil pressure, fuel pressure, multi-purpose, hydraulic pressure, and manifold pressure indicators.

Table 4-9. Static Friction Error (Counter Drum Pointer) (Vibrator Inoperative)

Test point altitude (feet)	Tolerance (feet)
500	70
1,500	70
2,500	70
3,500	70
7,500	80
12,500	90
17,500	110
22,500	120
32,500	180
35,500	300
42,500	300

(2) Testing. The following paragraphs describe tests and replacement criteria for remote reading pressure indicators.

(a) Continuity check test. Test wiring for proper continuity as specified in applicable wiring diagram.

(b) Master transmitter test. Test indicators and transmitters with a synchro test set. When either indicator or transmitter is faulty, it will be replaced.

(c) Zero check test. With ac power on (26V, 400Hz), error at zero indication must not exceed tolerances specified in table 4-12. When errors exceed tolerances listed in table 4-12 and wiring and transmitter are in correct working order, the indicator will be replaced.

j. Tachometer Systems. Principles of operation, types, and testing of tachometer systems are described in the following paragraphs.

(1) Principles of operation and types. Tachometer systems are independent instrument systems which furnish their own operating power. A tachometer system consists of an indicator, a generator, and connecting wiring. Synchronous rotor three-wire, synchronous rotor two-wire, dual synchronous rotor three-wire, and dual synchronous rotor two-wire tachometer systems are the most common types.

(2) Testing. The following paragraphs describe tests and replacement criteria for tachometer systems.

Table 4-10. Pressure Altitude Difference (Counter Drum Pointer)

Pressure (inches of mercury (Hg))	Altitude difference (feet)
28.10	-1727
28.50	-1340
29.00	-863
29.50	-392
29.92	0
30.50	+531
30.90	+893
31.00	+983

Table 4-11. Indicator Tolerances (Direct)

Range	Types	Function	Tolerance
	NOTE		
	If aircraft has just completed a flight of one hour or longer at altitudes of 10,000 feet or over, allow two hours for stabilization before testing altimeters.		
0 to 25 and 0 to 35 psi	MS28061 and MS28064 C-32 and C-33	Fuel	(±0.5) psi
0 to 50 psi	O-1 and O-2	Multi-Purpose	(± 1.0) psi
0 to 200 psi	B-23	Oil	(25.5) psi
0 to 2000 psi	All	Hydraulic	(±50) psi
0 to 4000 psi	E-6 and ME-1	Hydraulic	(±75) psi
0 to 5000 psi	All	Hydraulic	(±100) psi
All	Altimeters All	Altitude Barometric Pressure	(±0-05) inch Hg barometric scale

Table 4-12. Indicator Tolerances (Remote)

Range	Types	Function	Tolerance
0 to 50 psi	MS28010-1 Indicator, MS28005-1 Transmitter	Multi-Purpose	(k2.0) psi
0 to 100 psi	MS28010-2 Indicator, MS28005-2, MH-2 Transmitter	Oil	(k3.5) psi
0 to 200 psi	MS28010-3 Indicator, MS28005-3 Transmitter	Oil	(25.5) psi
0 to 300 psi	MD-1 Indicator, MH-1 Transmitter	Oil	(k9.0) psi
0 to 600 psi	C-34, MS28010-7 indicator E-7 MS280057 Transmitter	Fuel	(k2.0) psi
0 to 4000 psi	MS28010-5 Indicator MS28005-8	Hydraulic	(±100) psi

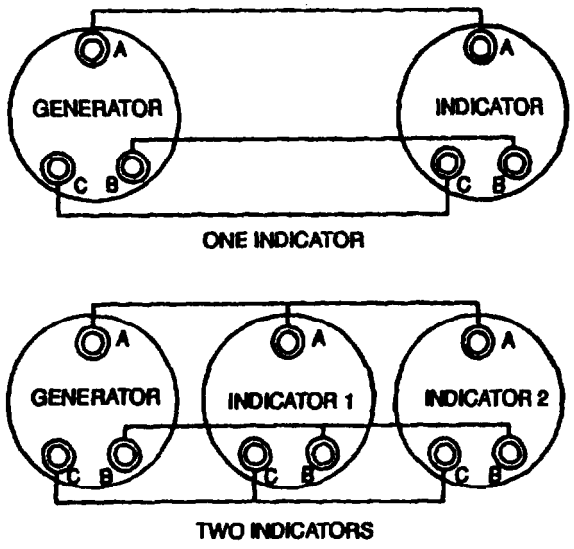

Figure 4-14. Synchronous Rotor Tachometer Wiring Diagram (Ungrounded Three-Wire System).

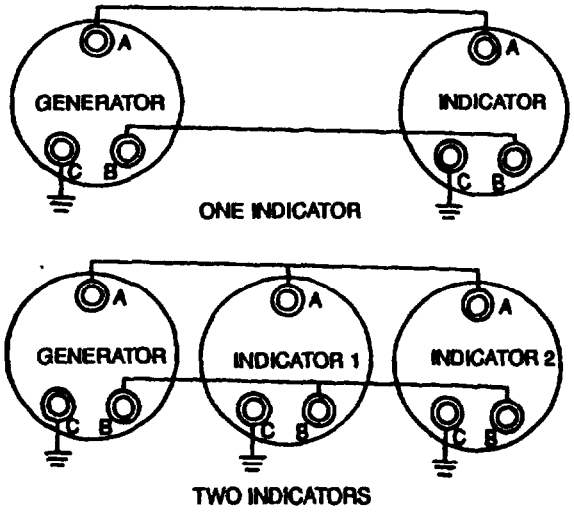

Figure 4-15. Synchronous Rotor Tachometer Wiring Diagram (Grounded Two-Wire System).

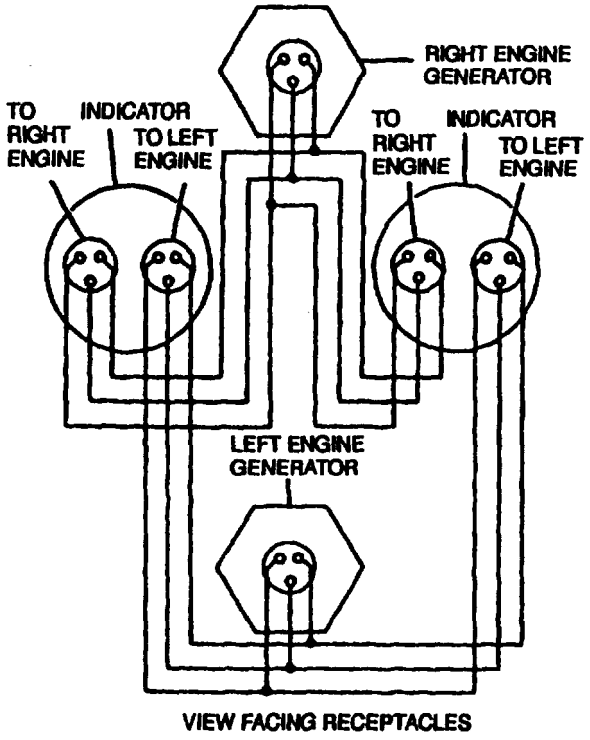

Figure 4-16. Dual Synchronous Rotor Tachometer Wiring Diagram (Ungrounded Three-Wire System).

(a) Continuity check test. Test wiring for proper continuity as specified in applicable wiring diagrams shown in figures 4-14 through 4-17.

(b) Master system test. Using a field portable tachometer tester, Type M-5, or equivalent, test generator and indicator for proper operation. Replace generator or indicator when test proves either to be unserviceable.

(c) Zero check test. With power off, engines not running, indicator needles should not revert to lowest reading.

k. *Electrical Resistance Temperature Indicators* Principles of operation and testing of electrical resistance temperature indicators are described in the following paragraphs.

(1) Principles of operation. The electrical resistance temperature indicator consists of an indicator, a bulb (located where temperature is to be measured), and connecting leads.

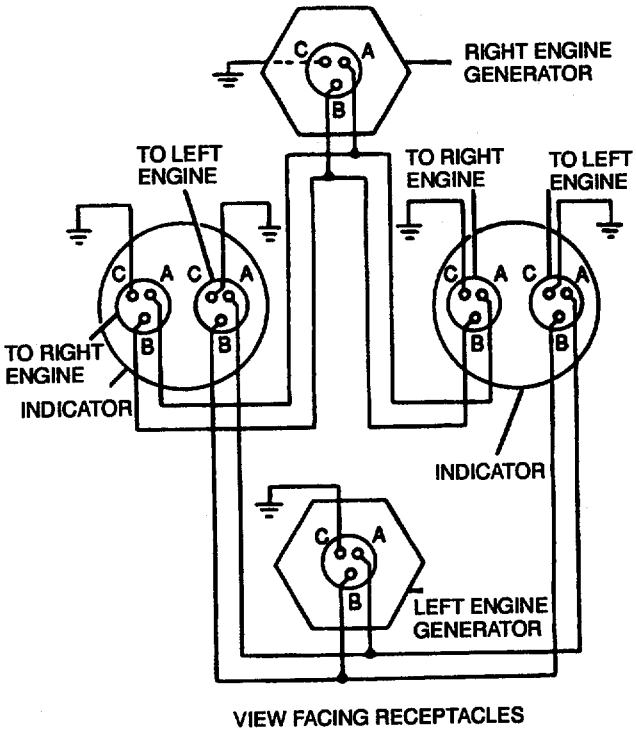

Figure 4-17. Dual Synchronous Rotor Tachometer Wiring Diagram (Grounded Two-Wire System)

(2) Testing. The following paragraphs describe tests and replacement criteria for electrical resistance temperature indicators.

(a) Continuity check test. Test wiring for proper continuity as specified in applicable wiring diagrams.

(b) Master thermometer test. Master thermometer test Using an electric thermometer tester, test indicator for proper operation.

(c) Bulb test. Using a precision ohmmeter or a Wheatstone bridge, test bulbs for proper resistance values.

(d) Replacement criteria. Replace indicators or bulbs when proven faulty. Repairs of damaged wiring shall be per Section VII of TM 55-1500-323-25.

l. Thermocouple Temperature Indicators. Principles of operation and testing of thermocouple temperature indicators are described in the following paragraphs.

(1) Principles of operation. The thermocouple temperature indicator consists of an indicator, bulb, and connecting leads.

(2) Testing. The following paragraphs describe tests and replacement criteria for thermocouple temperature indicators.

(a) Resistance test. Disconnect leads from indicator and test for proper lead resistance with a precision ohmmeter or a Wheatstone bridge. Resistance value must be as specified on back side of indicator. Repair or replace leads when resistance is other than specified.

(b) Master thermometer test. With on-lead disconnected, indicator must read within 18°F (10°C) of surrounding temperature when tested against a master mercury thermometer. Indicator may be adjusted to read tolerance with zero adjustment screw. When indicator cannot be adjusted, it must be replaced.

m. <u>*Outside Air Temperature Gauges*</u>. Principles of operation and testing of outside air temperature gauges, as shown figure 4-18, are described in the following paragraphs.

(1) Principles of operation. Outside air temperature gauges show outside air temperature. The system usually consists of an indicator, bulb, and circuit breaker.

(2) Testing. The following paragraphs describe the test procedures and replacement criteria for outside air temperature gauges.

(a) Master thermometer test. Test outside air temperature gauges using the following procedures:

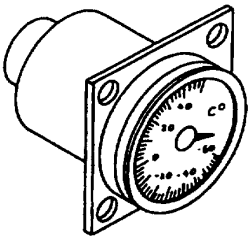

Figure 4-18 Outside Air Temperature Gauge

1 Remove gauge to be shop tested.

2 Obtain mercury centigrade thermometer NSN 6685-00-851-4577.

3 Fill container with fresh water and allow water to stabilize at room temperature. (Allow to sit overnight, if possible.

4 Remove sun shields and suspend gauge in such a way that the stems are vertical and are immersed two to two and a half inches into the water. Simultaneously, suspend the mercury thermometer in the water to an equal depth.

5 Record the mercury thermometer and gauge temperature after five minutes. Allow an additional five minutes to pass and record temperatures again. Repeat until temperatures stabilize.

6 Fill a container with ice cubes or crushed ice and water.

7 Place the gauge with stems vertical into the ice-water approximately two to two and a half inches. Simultaneously, immerse the mercury thermometer to the same depth.

8 Record the mercury thermometer and gauge temperature after five minutes. Allow an additional five minutes to pass and record temperatures again. Repeat until temperatures stabilize.

(b) Replacement criteria. Gauges must agree with the mercury thermometer within two degrees at both test points. Failure to meet either test point within two degrees is cause for rejection.

(3) Temperature Conversion. To convert Fahrenheit to centigrade or centigrade to Fahrenheit, use table 4-13 or the following conversion formulas.

C = (5/9) x (F-32)

Example: change 86 °F to Centigrade

C = (5/9) x (F-32)
C = .5556 x (86-32)
C = .5556 x (54)
C = 300

F = [(9/5) x C] + 32

Example: change 40°C to Fahrenheit

F = [(9/5 x C] + 32
F = (1. 8 x 40) + 32
F = 72 + 32
F = 104°

n. Deleted. ■

o. *Magnetic Compass*. The magnetic compass, as shown in figure 4-19, consists of liquid-filled bowl containing a pivoted float element to which one or more bar magnets, called needles, are fastened. The liquid dampens the oscillations of the float and decreases the friction of the pivot. A diaphragm and a vent provide for expansion and contraction of the liquid as altitude and temperature change. Principles of operation, compass errors, compass compensation, and replacement criteria are described by the following paragraphs.

Table 4-13. Fahrenheit-Centigrade Conversion Chart

°C	°F	°C	°F	°C	°F	°C	°F	°C	°F
-50	-58	-20	-4.0	10	50.0	40	104.0	70	158.0
-48	-54.4	-18	-0.4	12	53.6	42	107.6	72	161.6
-46	-50.8	-16	3.2	14	57.2	44	111.2	74	165.2
-44	-47.2	-14	6.8	16	60.8	46	114.8	76	168.8
-42	-43.6	-12	10.4	18	64.4	48	118.4	78	172.4
-40	-40.0	-10	14.0	20	68.0	50	122.0	80	176.0
-38	-36.4	-8	17.6	22	71.6	52	125.6	82	179.6
-36	-32.8	-6	21.2	24	75.2	54	129.2	84	183.2
-34	-29.2	-4	24.8	26	78.8	56	132.8	86	186.8
-32	-25.6	-2	28.4	28	82.4	58	136.4	88	190.4
-30	-22.0	0	32.0	30	86.0	60	140.0	90	194.0
-28	-18.4	2	35.6	32	89.6	62	143.6	92	197.6
-26	-14.8	4	39.2	34	93.2	64	147.2	94	201.2
-24	-11.2	6	42.8	36	96.8	66	150.8	96	204.8
-22	-7.6	8	46.4	38	100.4	68	154.4	98	208.4
								100	212.0

(1) Principles of operation. A magnetic compass operates on the principle of magnetic attraction. The magnets, which are free to pivot in a horizontal plane, will assume a position with the north-seeking ends pointing toward the earth's north magnetic pole. The magnetic heading is read by reading a compass card attached to the float.

(2) Compass errors. Magnetic variation and magnetic deviation are explained in the following paragraphs.

(a) Magnetic variation. Magnetic variation is the angular difference in degrees between the geographic north pole and the magnetic north pole. This variation is caused by the magnetic field, which is constantly changing. Since variation differs according to geographic location, its effect on the compass cannot be removed by any type of compensation. Variation is called west variation when the earth's magnetic field draws the compass needle to the left of the geographic north pole and east variation when the needle is drawn to the right of the geographic north pole.

(b) Magnetic deviation. Magnetic deviation is the magnetic disturbances within the aircraft that deflect the compass needle from alignment with magnetic north. Compasses must be checked and periodically compensated by adjustment. Deviations remaining after adjustment are recorded on a compass correction card, as shown in figure 4-20, mounted near the compass.

(3) Compass compensation. Compass compensation frequency requirements, pre-compensation instructions, compass rose method of compensating, and the B-16 master sighting compass method of compensating are explained in the following paragraphs.

(a) Compensation frequency requirements. Compass will be checked for accuracy, compensated when necessary, and readings recorded on DD Form 1613 (Pilot Compass Correction Card) at the following times:

- At least once during each 12 month period

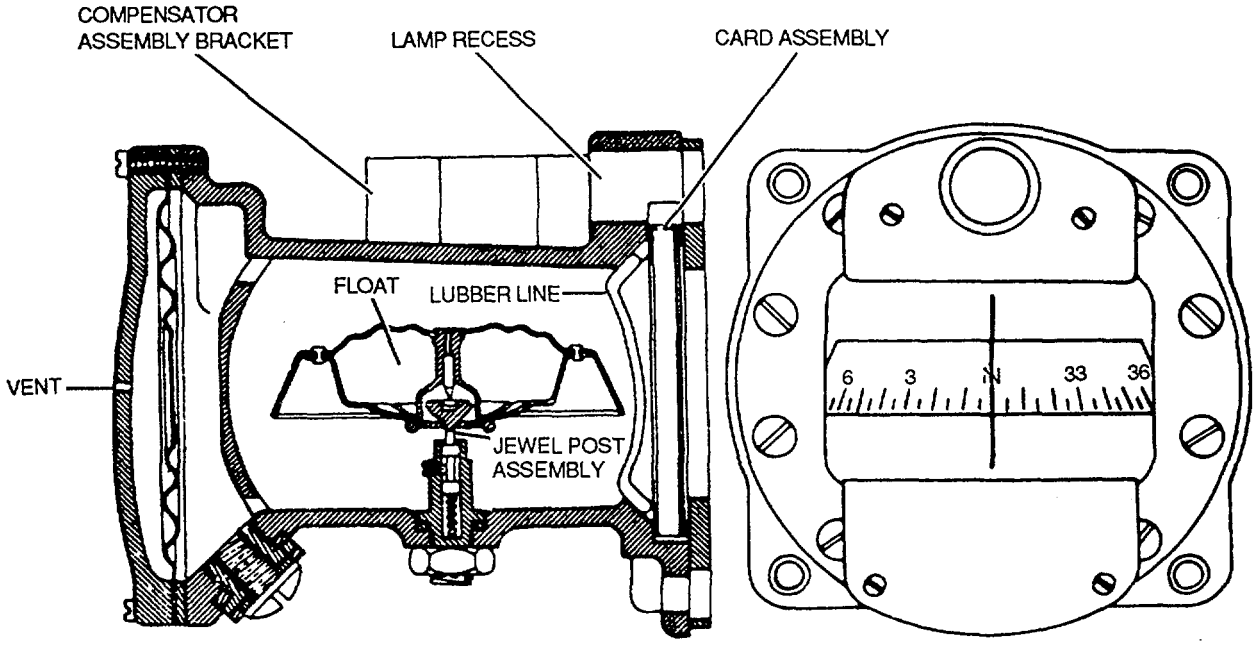

Figure 4-19. Magnetic Compass

AIRCRAFT COMPASS		
DATE		
	FOR	STEER
N	000°	000°
	030°	033°
	060°	060°
E	090°	095°
	120°	120°
	150°	149°
S	180°	175°
	210°	205°
	240°	234°
W	270°	265°
	300°	294°
	330°	326°
CALIBRATED BY:		

Figure 4-20. Compass Correction Card

- After each engine change

NOTE

Check applicable aircraft special inspection to determine if the compass check and/or calibration is required after engine change.

- After any modification/change to the existing electrical system of major structural change
- At any time compass is suspected of being in error
- Whenever the flux valve has loosened in its mounting, has been removed during troubleshooting, or has been replaced with a new unit
- At anytime the applicable aircraft technical manual specifies

(b) Pre-compensation instructions. Accomplish the following procedures before compensating:

1 Ensure that aircraft is at least 100 yards from any steel structure, underground cables, metal pipes, reinforced concrete or other aircraft.

2 Ensure that all items in aircraft containing ferrous materials are located in the positions they will occupy during flight.

3 Remove all magnetic articles from one's person. Use a nonmagnetic screwdriver.

4 Using a small permanent magnet, cause compass card to deflect through a small angle. Note whether the card rotates freely on its pivot, and that its path of rotation is in a horizontal plane. To avoid erroneous readings, read compass only directly in front of the lubber line.

5 Prior to compensation of magnetic compass, have aircraft headed successively toward magnetic North, East, South, and West with engines running and all systems operating. Compass readings must read within 20 of deviation noted on DD Form 1613 (Pilot Compass Correction Card). When reading is within specified tolerance, compass does not need compensating. Transcribe readings from old DD Form 1613 to new DD Form 1613; date and sign form. If magnetic compass is not within tolerance, proceed with next paragraph.

6 Remove one of the retaining screws and loosen the other from the compensator assembly cover plate, and rotate the plate to allow access to the compensator adjustment screws. Ensure that error compensator adjustment screws are set to neutral prior to realignment of compass transmitter.

7 Run the engines and turn on power to all electrical equipment which may have magnetic

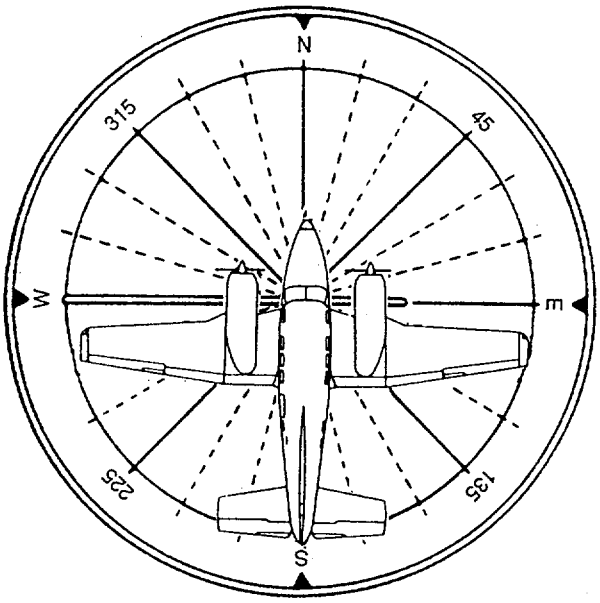

Figure 4-21. Compass Rose

influence on compass so that flight conditions are simulated as nearly as possible.

(c) Compass rose method of compensating. A compass rose is often used to obtain the magnetic headings when an aircraft compass is being compensated. This method of swinging the compass is desirable, provided that care is exercised in aligning the aircraft with various headings. All equipment used in the vicinity of the compass rose must be nonmagnetic materials. Use the following procedures to compensate compass.

1 Place aircraft on compass rose, as shown in figure 4-21, and head toward magnetic north. Record compass reading in column 2, line 1 of DD Form 1613 (Pilot Compass Correction Card) as shown in figure 4-22. Assume that the compass reading is 8 degrees.

2 Turn aircraft to the east magnetic heading and record compass reading in column 2, line 3, of DD Form 1613. Assume that the reading is 86 degrees.

3 Turn aircraft to the south magnet heading and record compass reading in column 2, line 5, of DD Form 1613. Assume that reading is 176 degrees.

4 Turn aircraft to the west magnetic heading and record compass reading in column 2, line 7, of DD Form 1613. Assume that compass reading is 278 degrees.

5 Fill in the column headed DEV; if aircraft COM P is greater than the actual heading, DEV number will be positive; if aircraft COMP is smaller than the actual heading, DEV number will be negative. All additions and subtractions are algebraic.

	Compensating Swing				Residual Swing		Computation Table		
	Comp Rose	Actual Head (M)	Aircraft Comp. (C)	Dev.	Actual Head (M)	Aircraft Comp. (C)	C to M	Actual Head (M)	M to C
N	000	000	008	+8	000	002	-2	000	+2
NE	045	045	046	-1	045	+1			
E	090	090	086	-4	090	092	-2	090	+2
SE	135	135	135	0	135	0			
S	180	180	176	-4	180	182	-2	180	+2
SW	225	225	224	+1	225	-1			
W	270	270	278	+8	270	272	-2	270	+2
NW	315	315	315	0	315	0			
COL NO.		(1)	(2)	(2)-(1)	(3)	(4)	(3)-(4)	(3)	(4)-(3)

Figure 4-22. DD Form 1613 (Compass Correction Card)

6 Return aircraft to the north magnetic heading. Add coefficient C, shown below, algebraically to compass reading on that heading to determine what compass should read when compensated. Adjust MS compensating screw (of polyplane compensator) or insert magnets in compensating drawer, which is at right value angles to needle, until compass indicates compensated value.

$$\text{Coefficient C} = \frac{N-S}{2} = \frac{(+8) - (-4)}{2} = \frac{12}{2} = +6$$

7 Head aircraft east. Add coefficient B, as shown below, algebraically to compass reading on that heading. Adjust EW compensating screw (or insert magnets in that chamber of compensating drawer at right angles to needle) until compass indicates compensated value.

$$\text{Coefficient B} = \frac{E-W}{2} = \frac{(-4) - (+8)}{2} = \frac{-12}{2} = -6$$

NOTE

- **The spread between maximum positive and maximum negative deviation after compensation shall not exceed 5 degrees.**
- **Coefficient A represents total deviation from the formula given on DD Form 1613. All additions and subtractions are algebraic.**

$$\text{Coefficient A} = \frac{N + E + S + W}{4} =$$

$$\frac{(+8) + (-4) + (-4) + (+8)}{4} = \frac{8}{4} = 2$$

8 After adjustment has been made, residual swing can begin on any heading. Record actual heading (M) Column 3, and aircraft compass reading (c) Column 4; repeat every 45 degrees around the circle. As indicated in the example in figure 4-22, C to M DEV is calculated by (3) - (4) or M to C by (4) - (3).

NOTE

The spread between maximum positive deviation and the maximum negative deviation after compensation shall not exceed 5 degrees.

9 Fill in back of the DD Form 1613. Detach heading correction card portion of the DD Form 1613 at the perforation and place in the cockpit. The location for the card may vary due to night vision goggle requirements. See applicable aircraft manual for location of Compass Correction Card.

10 Place the balance of the form with the aircraft historical record as a record of compass swing until completion of the next compass swing. Upon transfer of aircraft, this portion of the form will accompany the aircraft with other records.

(d) B16 master sighting compass method of compensating. The compensator assembly is removed from the compass and a special sighting device fitting is substituted. During compensating procedure with this instrument, aircraft is turned to desired heading as indicated by aircraft compass. A sight is then taken by the swinging compass 2 points on the fore-and-aft axis of aircraft being lined up with hairline in collimator lens, as shown in figure 4-23. The compass used for this purpose will be painted red, indicating that it has been remagnetized 180 degrees from normal. This permits observer to read magnetic heading of aircraft directly when sighting from in front of aircraft. When a compass drawn from stock is used as a swinging sight, 180 degrees must be added to compass reading to obtain magnetic heading of aircraft. Corrections, as indicated by master compass, are made on each of the cardinal headings in the conventional manner. In every other respect, compensation is exactly the same as in the use of the compass rose.

NOTE

When using a sight compass on helicopters, line up with any two objects that are parallel with the centerline of the aircraft.

(e) Using AHRS and INS to compensate compasses. If the aircraft is equipped with a functional Attitude and Heading References System (AHRS) or an Inertial Navigation System (INS) and the variation is known to within 0. 2 degree, the standby compass system may be swung using either of these systems as a heading reference in place of a compass rose. The standby compass system is then compensated by using the procedures in paragraph (c). Special care must be exercised in the alignment of aircraft and the use of nonmagnetic materials.

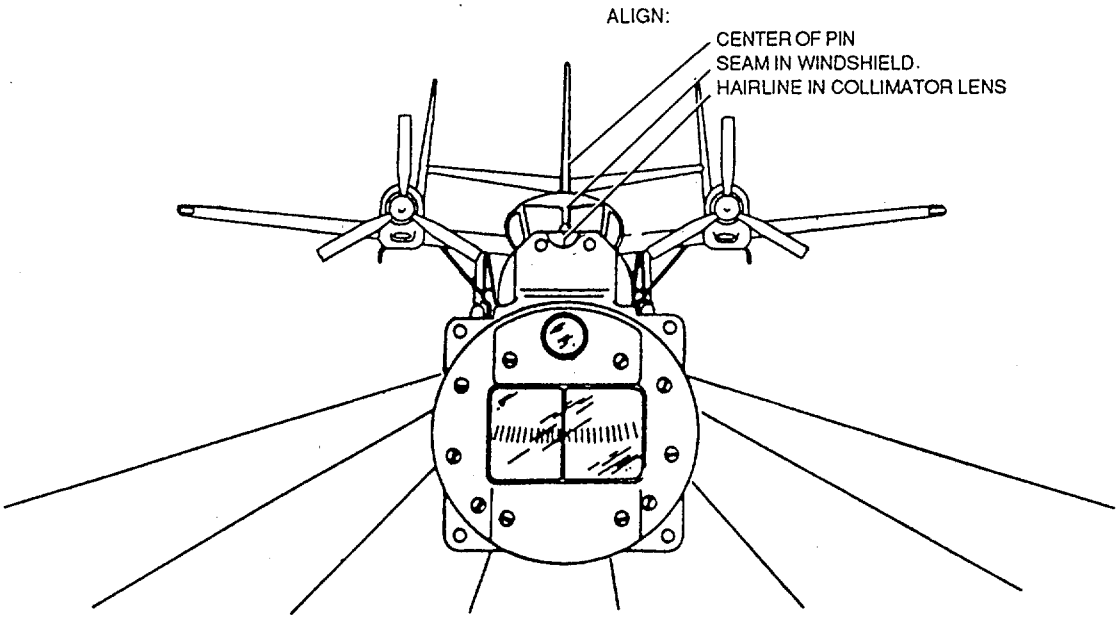

Figure 4-23. B-16 Master Sighting Compass Alignment Method.

NOTE

When using the Attitude and Heading Reference System (AHRS) or the Inertial Navigation System, locate the aircraft away from magnetic buildings, materials and other structures.

(f) Checking compass while flying. The compass may be checked for deviation while flying by comparing the compass heading with a known heading.

NOTE

Do not compensate compass while in flight.

(g) Calibrator set method of compensating. A more precise method for checking the compass is reflected in TM 11-4920-292-15. It may be used if desired and necessary test equipment is available.

(4) Replacement criteria. Line maintenance on magnetic compasses consists primarily of compass swinging, replacing burned out light bulbs, and replacement of defective compasses. Compasses will be replaced for any of the following:

- Clouded or discolored liquid
- Illegible card markings, fading, or loss of luminous paint
- Failure of card to rotate freely in a horizontal plane when aircraft is in a normal flying position
- Cracked bowl, broken mounting frame, or broken lugs
- Erratic action, or failure of compass to respond after proper efforts to compensate
- Lubber line loose or misaligned
- Air visible in bowl of compass
- If the total deviation of the eight headings exceeds 8 degrees

p. Remote Indicating Compass. Remote indicating compass compensation, testing, and replacement criteria are explained in the following paragraphs.

(1) Compass compensation. Remote indicating compass compensation procedures are the same as the magnetic compass, except that when compensating, the power supply to the compass must be turned on.

(2) Testing and replacement criteria. Do not replace components of remote indicating compass without first testing wiring for proper continuity (see figure 4-24), and the indicator for correct operation. Test indicator by using the following procedures:

(a) Using P-1, ANASM61, or ANASM339V1 tester, test indicator and transmitter for proper operation. Refer to applicable tester technical manual for operation and connection of tester, and applicable wiring diagram for location of transmitter.

(b) When the remote magnetic compass does not read within specified tolerances, check applied voltage. If power supply is functioning properly, troubleshoot system in accordance with applicable TM 11 series maintenance manual.

(c) Replace either indicator or transmitter when faulty.

q. Electrical Liquid Indicating Systems and Indicators. Electrical liquid indicating systems are used for fuel quantity and anti-icing fluid quantity. A transmitter in the liquid tanks transmits an electrical signal to position the pointer of a gauge in the cockpit. Refer to applicable aircraft maintenance manual for testing and troubleshooting procedures.

r. Position Indicating Systems and Indicators. Position indicating systems are used to indicate position of landing gear and flaps. A cockpit indicator shows relative position of landing gear and flaps. Refer to applicable aircraft maintenance manual for testing and troubleshooting procedures.

s. Repair and Replacements. The following paragraphs describe repair and replacement of instruments and instrument system components that can be accomplished on the flight line.

(1) Repair. Line repair is limited primarily to the following:

- Resoldering broken leads
- Replacing tubing, hose, and fittings
- Removing obstructions from rigid or flexible tubing
- Recompensating compass systems
- Removal and replacement of components

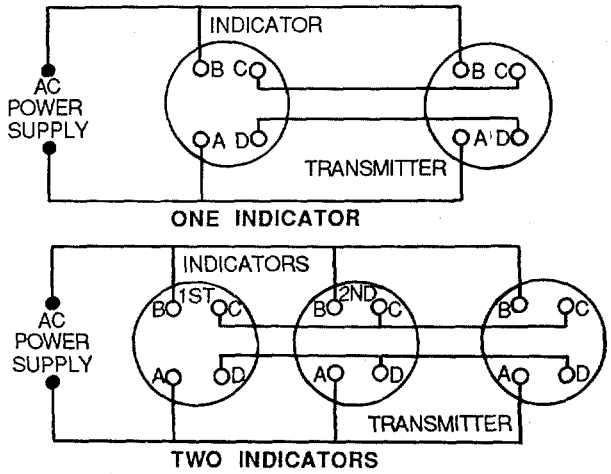

Figure 4-24. Remote Indicating Compass Wiring Diagram

(2) Replacement. Instruments (indicators or transmitters) will be removed and replaced for any of the following reasons:

- Failure to indicate (excluding system failures)
- Inaccurate indicators (excluding system failure)
- Damage case
- Loose or distorted pointers
- Cracked or loose cover glass
- Cracked or broken mounting lugs
- Damaged lamp receptacles
- Defective setting or caging mechanisms
- Defective binding posts
- Defective connecting nipples and AN/MS connectors
- Dull or discolored luminous or fluorescent markings
- Electrical connectors for bent or damaged pins, stripped, crossed or excessively worn threads, or visual damage to the shell

APPENDIX A

REFERENCES

A-1 ARMY REGULATIONS (AR):

AR 385-10	Army Safety Program
AR 385-30	Safety Color Code Markings and Signs
AR 385-32	Protective Clothing and Equipment

A-2 FEDERAL HANDBOOK:

A-3 TECHNICAL BULLETINS (TB):

TB 385-4	Safety Precautions for Maintenance of Electrical/Electronic Equipment

A-4 TECHNICAL MANUALS (TM):

TM 1-1500-204-23-6	Aviation Unit Maintenance (AVUM) and Aviation Intermediate Maintenance (AVIM) Manual for General Aircraft Maintenance (Hardware and Consumable Materials) Volume 6
TM 1-1500-343-23	Avionic Cleaning and Corrosion Prevention/Control
TM 1-1500-344-23	Aircraft Weapons Systems Cleaning and Corrosion
TM 11-4920-229-12	Scorsby Table Assembly
TM 11-6130-385-34	Inverter Static Power
TM 11-6140-203-23	Aircraft Nickel-Cadmium Batteries E
TM 55-1500-323-24	Instrument Practices for Aircraft Electric and Electronic Wiring
TM 55-1500-345-23	Painting and Marking of Army Aircraft
TM 55-4920-229-12	Scorsby Table Assembly
TM 55-4920-231-14	Tester, Pilot and Static Systems
TM 55-4920-377-13&P	Tumtable Gyro Instrument Testing
TM 55-6685-201-12	Manometer

A-5 LEGAL AND CONSENSUS STANDARDS

NFPA 410	Aircraft Maintenance
OSHA 1910.251	Occupational Safety and Health Act of 1971

A-6 MILITARY SPECIFICATIONS

MIL-W-5088	Wiring, Aerospace Vehicle
QQ-S-571	Solder, Electronic (96 to 486 degrees C)

A-7 DEPARTMENT OF DEFENSE (DD) FORMS

DD Form 1613	Compass Correction Card

GLOSSARY

AMMETER —	An instrument that measures either ac or dc current.
CONDUCTOR —	A bare or insulated wire or combination of wires not insulated from one another, suitable for carrying electrical current. They usually are copper, aluminum, steel or silver.
FREQUENCY —	The number of complete cycles in one second of alternating current, voltage, or electromagnetic pressure waves.
HYSTERESIS —	The difference obtained on measuring instruments containing iron when the current is increased to a definite value and when the current is reduced from a higher value to the same definite value.
LOAD —	The power consumed by a machine or circuit in performing its function.
POLARITY —	Having two opposite charges, one positive and the other negative.
VOLTAGE —	Electrical pressure; the force which causes current to flow through an electrical conductor.
VOLTMETER —	A current measuring instrument designed to indicate voltage by measuring the current flow through a resistance of known value.
WAVE —	An activity that rises and falls, or advances and retreats, as it travels through a medium.

INDEX

Subject	Paragraph, Figure, Table Number
A	
Airspeed Indicator	F4-11
Test Tolerances	T4-1
Alternating Current, Basic Principles and Theory for	2-3
Alternating Current, Cycle	F2-2
Altimeter	4-3, F4-13
Ammeter	2-6d
Automatic Wire Marking Machines	F3-2
B	
B-16 Master Sighting Compass Alignment Method	F4-23
Basic Circuits	2-5
Compound	2-5c, F2-7
Parallel	2-5b, F2-6
Series	2-5a, F2-5
Basic Principles and Theory for Alternating Current	2-3
Basic Principles and Theory for Direct Current	2-2
Bonds	3-lk
C	
Centigrade-Fahrenheit Conversion Chart	T413
Circuit Breakers	3-1 n
Circuit, Thermocouple	F3-13
Circuits, Basic	2-5
Cleaning Apparatus, Mercury	F4-3
Compass	
Alignment, B-16 Master Sighting Method	F4-23
Correction Card	F4-20
Rose	F4-21
Components, of Electrical Systems	3-4
Compound Circuits	2-5c, F2-7
Conduits	3-lj
Connectors	
Inspection of	3-3b
Installation of (on Wires)	3-3c
MS	F3-4
Potting	F3-7
Rectangular Shell	F3-6
Subminiature	F3-5
Consumable Materials	1-3

INDEX - CONT

Subject	Paragraph, Figure, Table Number
C - Continued	
Continuity Tester	2-6b, F2-8
Copper Wire Strippers	T3-1
Correction Card, Compass	F4-20
Counter Drum Pointer Altimeter	F413
Friction Stop and Jump Error	T4-8
Pressure Altitude Difference	T4-10
Scale Error	T4-6
Static Friction Error (Vibrator Inoperative)	T4-9
Test Tolerances	T4-7
Cycle of Alliterating Current	F2-2
D	
D'Arsonval Meter	2-6c, F2-9
DD Form 1613 (Pilot Compass Correction Card)	F422
Direct Current Wave Form	F2-1
Direct Current, Basic Principles and Theory for	2-2
Direct Reading Pressure Indicator	4-3h
Tolerances	T4-11
Dual Synchronous Rotor Tachometer Wiring Diagram (Grounded Two-Wire System)	F4-17
Dual Synchronous Rotor Tachometer Wiring Diagram (Ungrounded Three-Wire System)	F4-16
E	
Electrical Connectors and Common Plugs, Installation of	3-3
Electrical Liquid Indicating Systems and Indicators	4-3p
Electrical Resistance Temperature Indicators	4-3k
Electrical System Components	3-4
Built-In Test Equipment	3-4f
Electronic Control Units	3-4g
Ignition Systems	3-4j
Inverters	3-4c, F3-9
Lighting Systems	3-4k
Motors	3-4h
Relays	3-4b
Starters	3-4d
Storage Battery	3-4a
Switches	34e
Thermocouples	3-4i

INDEX - CONT

Subject	Paragraph, Figure, Table Number
E - Continued	
Switches	3-4e
Thermocouples..	3-4i
Electrical System Troubleshooting	3-2
Electrodynamometer	2-6h
Equipment, Measuring	2-6
Equipment Safety	
ElectricShop..	2-1c
InstrumentShop..	4-1c
F	
Fahrenheit-Centigrade Conversion Chart	T4-13
Fire Safety	
ElectricShop..	2-1d
InstrumentShop..	4-1d
Frequency Meters	2-6k
Friction Stop and Jump Error, Counter Drum Pointer Altimeter	T4-8
Friction Test Tolerances, Three Pointer Altimeter	T4-4
Fuse and Fuse Holders	3-1h
G	
Gauge,Wire	F3-1
General Shop Rules, Electric Shop	2-1
EquipmentSafety..	2-1c
FireSafety	2-1d
Maintenance of Shop Equipment	2-1e
Responsibility	2-1a
Shop Housekeeping	2-1b
General Shop Rules, Instrument Shop	4-1
Equipmentsafety..	4-1c
FireSafety	4-1d
Responsibility	4-1a
ShopHousekeeping	4-1b
H	
Hand Wire Marking Machine	F3-3
I	
Ignition System Troubleshooting Chart	T3-3
Indicator, Airspeed	4-3e, F4-11

INDEX - CONT

Subject	Paragraph, Figure, Table Number
I - Continued	
Indicator, Tolerances	
Direct Reading Pressure Indicator	T4-11
Remote Reading Pressure Indicator	T4-12
Inspection of Installations of Wires and Cables	3-1
Inspection of Instrument Systems	4-3a
Inspectfon Requirements for Installations of Wires and Cables	3-1a
Inspection Requirements, Instruments and Instrument Systems	4-3b
Installation Inspection of Wires and Cables	3-1
Bonds..	3-1k
CircuitBreakers	3-1n
Conduits	3-1j
Fuses and Fuse Holders	3-1h
Inspection Requirements	3-1a
Junctions	3-1l
Kapton Wiring	3-1o
Marking of Wires with Marking Machines	3-1 f
Replacement Criteria	3-1b
Splices	3-1i
TerminalsandTerminalBlocks	3-1g
ToggleSwitches	3-1m
Wire Identification	3-1d
WireSizes	3-1c
WireStripping	3-1e
Installation of Electrical Connectors and Common Plugs	3-3
Inspection of Connectors	3-3b
Installation of Connectors on Wires	3-3c
TypesofConnectors	3-3a
Instruments and Instrument System Maintenance	4-3
AirspeedIndicators	4-3e
Altimeters	4-39, F4-13
Direct Reading Pressure Indicators	4-3h
Electrical Liquid Indicating Systems and Indicators	4-3q
Electrical Resistance Temperature Indicators	4-3k
Inspection of Instrument Systems	43a
Inspection Requirements.	4-3b
MagneticCompass	4-30, F4-19
Outside Air Temperature Gauges	4-3m
PitotStaticSystem	4-3c, F4-7
Pitot Static System Heater	4-3d
Position Indicating Systems and Indicators	4-3r
Remote Indicating Compass.	4-3p
Remote Reading Pressure Indicators	4-3i
Repair and Replacements	4-3s
TachometerSystems	43j
Thermocouple Temperature Indicators	4-31
Vertical Speed Indicators.	43f, F4-12
Inverter	F3-9

INDEX - CONT

Subject	Paragraph, Figure, Table Number
J	
Junctions..	3-1l
K	
Kapton Wiring..	3-1o
L	
Leak Test Connections	
Pitot	F4-8
Static	F4-9
Lighting System Troubleshooting Chart	T3-4
M	
MagneticCompass	4-3n, F4-19
Maintenance of Instruments and Instrument Systems	4-3
Maintenance of Shop Equipment, Electrical Shop	2-1e
Maintenance of Shop Equipment, Instrument Shop.	4-2
JetCalSystemTester	4-2f, F4-6
Manometer	4-2a, F4-1
Pitot Static System Tester	4-2e
Scorsby Base	4-2d, F4-5
Turntable Instrument Tester	4-2c-F4-4
VacuumChambers	4-2b
Manometer	4-2a, F4-1
ManometerReading Level	F4-2
Marking of Wires with Marking Machine	3-1f
Materials, Consumable	1-3
MeasuringEquipment	2-6
Ammeter	2-6d
Continuity Tester	2-6b
D' ArsonvalMeter	2-6c
Electrodynamometer	2-6h
Frequency Meters	2-6k
Meter Safety Precautions	2-61
Multimeter	F2-10, 2-69
Ohmmeter	2-6f
RectifierMeter	2-6i
TestLights	2-6a

INDEX - CONT

Subject	Paragraph, Figure, Table Number
M - Continued	
Voltmeter	2-6e
Wattmeter	2-6j
Mercury Cleaning Apparatus	F4-3
Meter,D' Arsonval	2-6c, F2-9
Meter Safety Precautions	2-61
Microswitch..	F3-11
MSConnectors	F3-4
Multimeter	F2-10, 2-69
O	
Ohmmeter..	2-61
Operational Check (of Electrical Systems)	3-2a
Outside Air Temperature Gauges	43m, F4-18
P	
ParallelCircuits	2-5b, F2-6
Pilot Compass Correction Cards, DD Form 1613	F4-22
Pitot	
LeakTestConnections	F4-8
StaticSystem	4-3c, F4-7
Static System Heater	4-3d
StaticSystemTester	4-2e
Tube	F4-10
Position Indicating Systems and Indicators	4-3q
Potting Connections	F3-7
Precautions (for Troubleshooting Electrical Systems)	3-2b
Pressure Altitude Difference	
Counter Drum Pointer Altimeter	T4-10
Three Pointer Altimeter	T45
Purpose(ofManual)	1-1
R	
Reading Level, Manometer	F4-2
Recommended Sizes oi Marking Tape	T3-2
Rectangular Shell Connectors	F3-6
RectifierMeter	2-6i
Relays, Typical	F3-8
Remote Indicating Compass	4-3o
WiringDiagram	F4-24
Remote Reading Pressure Indicator.	4-3i
Tolerances..	T4-12

INDEX - CONT

Subject **Paragraph, Figure, Table Number**

R - Continued

Repair and Replacements, Instruments and Instrument Systems 4-3s
Replacement Criteria for Wires and Cables 3-lb
Responsibility
for Electric Shop Rules ..... 2-1 a
for Instrument Shop Rules 4-la
Rose, Compass F4-21
Rotary-Selector Switch F3-12

S

Scale Error
Counter Drum Pointer Altimeter T4-6
Three Pointer Altimeter T4-3
Schematic, of Typical Electrical System F2-4
Scope (of Manual) 1-2
Scorsby Base 4-2g, F4-5
Series Circuits 2-5a, F2-5
Shop Housekeeping
Electrical Shop ..... 2-1 b
Instrument Shop ..... 4-1 b
Sizes of Marking Type, Recommended T3-2
Splices 3-1i
Static Friction Error (Vibrator Inoperative), Counter Drum Pointer Altimeter T4-9
Subminiature Connectors F3-5
Switch
Rotary-Selector F3-12
Toggle F3-10
Symbols, Charts, and Schematics for Wiring Diagrams 2-4
Symbols, Wiring Diagram F2-3
Synchronous Rotor Tachometer Wiring Diagram (Grounded Two-Wire System) F4-1 5
Synchronous Rotor Tachometer Wiring Diagram (Ungrounded Three-Wire System) F4-14

T

Tachometer Systems 4-3j
Tachometer Wiring Diagram
Dual Synchronous Rotor (Grounded Two-Wire System) F4-17
Dual Synchronous Rotor (Ungrounded Three-Wire System) F4-16
Synchronous Rotor (Grounded Two-Wire System) F4-15
Synchronous Rotor (Ungrounded Three-Wire System) F4-14
Terminals and Terminal Blocks 3-1g

INDEX - CONT

Subject	Paragraph, Figure, Table Number
T - Continued	
Test Lights	2-6a
Test Tolerances Airspeed Indicator	
Airspeed Indicator	T4
Counter Drum Pointer Altimeter	T4-7
Three Pointer Altimeter	T4-3
Tester, Continuity	2-6b, F2-8
Thermocouple Circuit	F3-13
Thermocouple Temperature Indicators	4-31
Three Point Altimeter	F4-13
Friction Test Tolerances	T4-4
Pressure Altitude Difference	T4-5
Scale Error	T4-2
Test Tolerances	T4-3
Toggle Switch	F3-10
Toggle Switches	3-1 m
Troubleshooting Electrical Systems	3-2
Operational Check	3-2a
Precautions	3-2b
Tube, Pilot	F4-10
Turntable Instrument Tester	4-2f, F4-4
Typical Electrical System Schematic	F2-4
Typical Ignition System Troubleshooting Chart	T3-3
Typical Lighting System Troubleshooting Chart	T3-4
Typical Relays	F3-8
V	
Vacuum Chambers	4-2d
Vertical System Indicators	4-3f, F4-12
Voltmeter	2-6e
W	
■ Wattmeter	2-6j
Wave Form, of Direct Current	F2-1
Wire Gauge	F3-1
Wire Identification	3-1d
Wire Marking Machines	
Automatic	F3-2
Hand	F3-3

INDEX - CONT

Subject	Paragraph, Figure, Table Number
W - Continued	
Wire Sizes	3-1c
Wire Strippers, for Copper Wire	T3-1
Wire Stripping	3-1e
Wiring Diagram, Remote Indicating Compass	F4-24
Wiring Diagram Symbols, Charts, and Schematics	F2-3, 2-4 ■

U· .S. GOVERNMENT PRINTING OFFICE: 1996-755-025/40086

By Order of the Secretary of the Army:

GORDON R. SULLIVAN
General, United States Army
Chief of Staff

Official:

MILTON H. HAMILTON
Administrative Assistant to the
Secretary of the Army
02549

Distribution:

To be distributed in accordance with DA Form 12-31-E, block no. 3226, requirements for TM 1-1500-204-23-4

☆ U.S. GOVERNMENT PRINTING OFFICE: 1995-388-421 42233

***These are the instructions for sending an electronic* 2028**

The following format must be used if submitting an electronic 2028. The subject line must be exactly the same and all fields must be included; however only the following fields are mandatory: 1, 3, 4, 5, 6, 7, 8, 9, 10, 13, 15, 16, 17, and 27.

From: " Whomever" <whomever@avma27.army.mil>
To: Is-Lp@redstone.armyl

Subject: DA Form 2028

1. **From:** Joe Smith
2. Unit: home
3. ***Address:*** *4300* Park
4. ***City:*** Hometown
5. St: MO
6. ***Zip:*** *77777*
7. **Date Sent:** 19-OCT-93
8. ***Pub no: 55-2840-229-23***
9. ***Pub Title:*** TM
10. ***Publication Date:*** 04-JUL-85
11. *Change Number: 7*
12. *Submitter Rank:* MSG
13. ***Submitter FName:*** Joe
14. *Submitter MName:* T
15. ***Submitter LName:*** Smith
16. ***Submltier Phone:*** 123-123-1234
17. ***Problem:* 1**
18. Page: 2
19. *Paragraph: 3*
20. *Line: 4*
21. NSN: 5
22. *Reference: 6*
23. Figure: 7
24. *Table: 8*
25. *Item: 9*
26. *Total:* 123
27. **Text:**

This is the text for the problem below line 27.

RECOMMENDED CHANGES TO EQUIPMENT TECHNICAL PUBLICATIONS

SOMETHING WRONG WITH THIS PUBLICATION?

THEN . .JOT DOWN THE DOPE ABOUT IT ON THIS FORM, CAREFULLY TEAR IT OUT, FOLD IT AND DROP IT IN THE MAIL!

FROM: (PRINT YOUR UNIT'S COMPLETE ADDRESS)
PFC John DOE
CO A 3rd Engineer Bn
Ft. Leonardwood, MO 63108

DATE SENT 22 August 1992

PUBLICATION NUMBER	PUBLICATION DATE	PUBLICATION TITLE
TM 1-1520-250-10	15 June 1992	Operator's manual MH60K Helicopter

BE EXACT PIN-POINT WHERE IT IS

PAGE NO	PARA-GRAPH	FIGURE NO	TABLE NO	IN THIS SPACE, TELL WHAT IS WRONG AND WHAT SHOULD BE DONE ABOUT IT:
6	2-1 a			In line 6 of paragraph 2-1a the manual states the engine has 6 cylinders. The engine on my set only has 4 cylinders. Change the manual to show 4 cylinders.
B1		4-3		Callout 16 on figure 4-3 is pointed at a bolt. In key to figure 4-3, item 16 is calle a shim. Please correct one or the other

EXAMPLE

PRINTED NAME, GRADE OR TITLE, AND TELEPHONE NUMBER
JOHN DOE, PFC (268) 317-7111

SIGN HERE
JOHN DOE John Doe

DA FORM 1 JUL 79 2028-2

PREVIOUS EDITIONS ARE OBSOLETE.

DRSTS-M verprint2, 1 Nov 80

P.S.- - IF YOUR OUTFIT WANTS TO KNOW ABOUT YOUR RECOMMENDATION, MAKE A CARBON COPY OF THIS AND GIVE TO YOUR HEADQUARTERS.

TEAR ALONG PERFORATED LINE

FILL IN YOUR UNIT'S ADDRESS

FOLD BACK

DEPARTMENT OF THE ARMY

OFFICIAL BUSINESS

Commander
U.S. Army Aviation and Missile Command
ATTN: AMSAM-MMC-LS-LP
Redstone Arsenal, Al 35898-5230

RECOMMENDED CHANGES TO EQUIPMENT TECHNICAL PUBLICATIONS

THEN . .JOT DOWN THE DOPE ABOUT IT ON THIS FORM, CAREFULLY TEAR IT OUT, FOLD IT AND DROP IT IN THE MAIL!

SOMETHING WRONG WITH THIS PUBLICATION?

FROM: (PRINT YOUR UNIT'S COMPLETE ADDRESS)

DATE SENT

PUBLICATION NUMBER	PUBLICATION DATE	PUBLICATION TITLE
TM 1-1500-204-23-4	31 July 1992	General Aircraft Maintenance Manual-Electrical and Instrument Maint

BE EXACT PIN-POINT WHERE IT IS

PAGE NO	PARA-GRAPH	FIGURE NO	TABLE NO

IN THIS SPACE, TELL WHAT IS WRONG AND WHAT SHOULD BE DONE ABOUT IT:

PRINTED NAME, GRADE OR TITLE, AND TELEPHONE NUMBER

SIGN HERE

DA FORM 1 JUL 79 2028-2

PREVIOUS EDITIONS ARE OBSOLETE.

DRSTS-M verprint2, 1 Nov 80

P.S.- - IF YOUR OUTFIT WANTS TO KNOW ABOUT YOUR RECOMMENDATION, MAKE A CARBON COPY OF THIS AND GIVE TO YOUR HEADQUARTERS.

FILL IN YOUR UNIT'S ADDRESS

FOLD BACK

DEPARTMENT OF THE ARMY

OFFICIAL BUSINESS

Commander
U.S. Army Aviation and Missile Command
ATTN: AMSAM-MMC-LS-LP
Redstone Arsenal, Al 35898-5230

TEAR ALONG PERFORATED LINE

RECOMMENDED CHANGES TO DOCUMENT TECHNICAL PUBLICATIONS

THEN . .JOT DOWN THE DOPE ABOUT IT ON THIS FORM, CAREFULLY TEAR IT OUT, FOLD IT AND DROP IT IN THE MAIL!

SOMETHING WRONG WITH THIS PUBLICATION?

FROM: (PRINT YOUR UNIT'S COMPLETE ADDRESS)

DATE SENT

PUBLICATION NUMBER	PUBLICATION DATE	PUBLICATION TITLE
TM 1-1500-204-23-4	31 July 1992	General Aircraft Maintenance Manual-Electrical and Instrument Maint

BE EXACT PIN-POINT WHERE IT IS

PAGE NO	PARA-GRAPH	FIGURE NO	TABLE NO

IN THIS SPACE, TELL WHAT IS WRONG AND WHAT SHOULD BE DONE ABOUT IT:

PRINTED NAME, GRADE OR TITLE, AND TELEPHONE NUMBER

SIGN HERE

DA FORM 1 JUL 79 2028-2

PREVIOUS EDITIONS ARE OBSOLETE.

DRSTS-M verprint2, 1 Nov 80

P.S.- - IF YOUR OUTFIT WANTS TO KNOW ABOUT YOUR RECOMMENDATION, MAKE A CARBON COPY OF THIS AND GIVE TO YOUR HEADQUARTERS.

FILL IN YOUR UNIT'S ADDRESS

FOLD BACK

DEPARTMENT OF THE ARMY

OFFICIAL BUSINESS

Commander
U.S. Army Aviation and Missile Command
ATTN: AMSAM-MMC-LS-LP
Redstone Arsenal, Al 35898-5230

TEAR ALONG PERFORATED LINE

RECOMMENDED CHANGES TO EQUIPMENT TECHNICAL PUBLICATIONS

THEN . .JOT DOWN THE DOPE ABOUT IT ON THIS FORM, CAREFULLY TEAR IT OUT, FOLD IT AND DROP IT IN THE MAIL!

SOMETHING WRONG WITH THIS PUBLICATION?

FROM: (PRINT YOUR UNIT'S COMPLETE ADDRESS)

DATE SENT

PUBLICATION NUMBER	PUBLICATION DATE	PUBLICATION TITLE
TM 1-1500-204-23-4	31 July 1992	General Aircraft Maintenance Manual-Electrical and Instrument Maint

BE EXACT PIN-POINT WHERE IT IS

PAGE NO	PARA-GRAPH	FIGURE NO	TABLE NO

IN THIS SPACE, TELL WHAT IS WRONG AND WHAT SHOULD BE DONE ABOUT IT:

PRINTED NAME, GRADE OR TITLE, AND TELEPHONE NUMBER

SIGN HERE

DA FORM 1 JUL 79 2028-2

PREVIOUS EDITIONS ARE OBSOLETE.

DRSTS-M verprint2, 1 Nov 80

P.S.- - IF YOUR OUTFIT WANTS TO KNOW ABOUT YOUR RECOMMENDATION, MAKE A CARBON COPY OF THIS AND GIVE TO YOUR HEADQUARTERS.

TEAR ALONG PERFORATED LINE

FILL IN YOUR UNIT'S ADDRESS

FOLD BACK

DEPARTMENT OF THE ARMY

OFFICIAL BUSINESS

Commander
U.S. Army Aviation and Missile Command
ATTN: AMSAM-MMC-LS-LP
Redstone Arsenal, Al 35898-5230

THE METRIC SYSTEM AND EQUIVALENTS

Linear Measure

1 centimeter = 10 millimeters = .39 inch
1 decimeter = 10 centimeters = 3.94 inches
1 meter = 10 decimeters = 39.37 inches
1 dekameter = 10 meters = 32.8 feet
1 hectometer = 10 dekameters = 328.08 feet
1 kilometer = 10 hectometers = 3.2808.8 feet

Weights

1 centigram = 10 milligrams = .15 grain
1 decigram = 10 centigrams = 1.54 grains
1 gram = 10 decigram = .035 ounce
1 dekagram = 10 grams = .35 ounce
1 hectogram = 10 dekagrams = 3.52 ounces
1 kilogram = 10 hectograms = 2.2 pounds
1 quintal = 100 kilograms = 220.46 pounds
1 metric ton = 10 quintals = 1.1 short tons

Cubic Measure

1 cu. centimeter = 1000 cu. millimeters = .06 cu. inch
1 cu. decimeter = 1000 cu. centimeters = 61.02 cu in.
1 cu. meter = 1000 cu. decimeters = 35.31 cu. feet

Square measure

1 sq. centimeter = 100 sq. millimeters =.155 sq. in.
1 sq. decimeter = 100 sq. centimeters = 15.5 inches
1 sq. meter (centare) = 100 sq. decimeters = 10.76 feet
1 sq. dekameter (are) = 100 sq. meters = 1.076.4 sq. ft.
1 sq. hectometer (hectare) = 100 sq. dekameters = 2.47 acres
1 sq. kilometer = 100 hectometers = .386 sq. miles

Liquid Measure

1 dekaliter = 10 liters = 2.64 gallons
1 hectoliter = 10 dekaliters = 26.42 gallons
1 kiloliter = 10 hectoliters = 264.18 gallons
1 liter = 10 deciliters = 33.81 fl. ounces
1 centiliter = 10 milliliters = .34 fl. ounce
1 deciliter = 10 centiliters = 3 38 fl. ounces
1 metric ton = 10 quintals = 1.1 short tons

Approximate Conversion Factors

To change	To	Multiply by
inches	centimeters	2.540
feet	meters	.305
yards	meters	.914
miles	kilometers	1.609
sq. inches	sq. centimeters	6.451
sq. feet	sq. meters	.093
sq. yards	sq. meters	.836
sq. miles	sq. kilometers	2.590
acres	sq. hectometers	.405
cubic feet	cubic meters	.028
cubic yards	cubic meters	.765
fluid ounces	milliliters	29.573
pints	liters	.472
quarts	liters	.946
gallons	liters	3.785
ounces	grams	28.349
pounds	kilograms	.454
short tons	metric tons	.907
pound inches	newton-meters	.11296

To change	To	Multiply by
ounce inches	newton-meters	.0070062
centimeters	inches	.394
meters	feet	3.280
meters	yards	1.094
kilometers	miles	.621
sq. centimeters	sq. inches	.155
sq. meters	sq. yards	10.764
sq. kilometers	sq. miles	1.196
sq. hectometers	acres	2.471
cubic meters	cubic feet	35.315
milliliters	fluid ounces	.034
liters	pints	2.113
liters	quarts	1.057
grams	ounces	.035
kilograms	pounds	2.205
metric tons	short tons	1.102
pound-feet	newton-meters	1.356

Temperature (Exact)

°F Fahrenheit temperature — 5/9 (after subtracting 32) — Celsius Temperature °C

PIN: 070463-000