TECHNICAL MANUAL

AVIATION UNIT MAINTENANCE (AVUM) AND AVIATION INTERMEDIATE MAINTENANCE (AVIM) MANUAL FOR

GENERAL AIRCRAFT MAINTENANCE

(MAINTENANCE PRACTICES FOR FUEL AND OIL SYSTEMS) VOLUME 3

***This manual together with TM 1-1500-204-23-1, TM 1-1500-204-23-2 and TM 1-1500-20423-4 through TM 1-1500-204-23-10, dated 31 July 1992, supersedes TM 55-1500-204-25/1, dated 6 April 1970, including all changes.**

DISTRIBUTION STATEMENT A: Approved for public release; distribution is unlimited.

HEADQUARTERS, DEPARTMENT OF THE ARMY
31 JULY 1992

CHANGE

NO. 2

HEADQUARTERS
DEPARTMENT OF THE ARMY
WASHINGTON, D.C., 22 November 1996

Aviation Unit Maintenance (AVUM) and Aviation Intermediate Maintenance (AVIM) Manual

for

General Aircraft Maintenance

(Maintenance Practices for Fuel and Oil Systems)
Volume 3

DISTRIBUTION STATEMENT A: Approved for public release; distribution is unlimited.

TM 1-1500-204-23-3, 31 July 1992, is changed as follows:

1. Remove and insert pages as indicated below. New or changed text material is indicated by a vertical bar in the margin. An illustration change is indicated by a miniature pointing hand.

Remove pages	Insert pages
i/(ii blank)	i/(ii blank)
- - - - -	2-43 through 2-68
Index 1 through Index 7/(Index 8 blank)	Index-1 through Index-8

2. Retain this sheet in front of manual for reference purposes.

By Order of the Secretary of the Army:

DENNIS J. REIMER
General United States Army
Chief of Staff

Official:

JOEL B. HUDSON
Administrative Assistant to the
Secretary of the Army
02836

To be distributed in accordance with DA Form 12-31-E, block no. 3302, requirements for TM 1-1500-204-23-3.

☆U.S. GOVERNMENT PRINTING OFFICE: 1996 - 710-115/40131

CHANGE

NO. 1

HEADQUARTERS
DEPARTMENT OF THE ARMY
WASHINGTON, D.C., 13 February 1995

Aviation Unit Maintenance (AVUM) and Aviation Intermediate Maintenance (AVIM)
Manual
for
General Aircraft Maintenance

(Maintenance Practices for Fuel and Oil Systems)
Volume 3

DISTRIBUTION STATEMENT A: Approved for public release; distribution is unlimited

TM 1-1500-204-23-3, 31 July 1992, is changed as follows:

1. Remove and insert pages as indicated below. New or changed text material is indicated by a vertical bar in the margin. An illustration change is indicated by a miniature pointing hand.

Remove pages	Insert pages
3-3 and 3-4	3-3 and 3-4
Index 5 and Index 6	Index 5 and Index 6

2. Retain this sheet in front of manual for reference purposes.

By Order of the Secretary of the Army:

GORDON R. SULLIVAN
General, United States Army
Chief of Staff

Official:

MILTON H. HAMILTON
Administrative Assistant to the
Secretary of the Army
07995

DISTRIBUTION:
To be distributed in accordance with DA Form 12-31-E, block no. 3226, requirements for TM 1-1500-204-23-3.

PRECAUTIONARY DATA

Personnel performing instructions involving operations, procedures, and practices which are included or implied in this technical manual shall observe the following instructions. Disregard of these warnings and precautionary information can cause serious injury, death, or an aborted mission.

WARNINGS CAUTIONS, and NOTES are means of attracting attention to essential or critical information in a manual. Definitions are outlined as follows.

WARNING

An operating or maintenance procedure, practice, condition, statement, etc., which if not strictly observed, could result in injury to or death of personnel.

CAUTION

An operating or maintenance procedure, practice, condition, statement, etc., which, if not strictly observed, could result in damage to, or destruction of, equipment or loss of mission effectiveness or long term health hazards to personnel.

NOTE

An essential operating or maintenance procedure, condition, or statement, which must be highlighted.

WARNING

ELECTRICAL EQUIPMENT All switches and electrical equipment shall be of the enclosed explosion-proof type. All metal apparatus shall be grounded to avoid the danger of igniting test fluid fumes or creating electrical shock.

USING SOLVENTS/PAINTS

Standard precautions such as fire prevention and adequate ventilation shall be exercised when using solvents or applying primer and coating.

Wear gloves or gauntlets when handling solvents as solvents may cause skin disorders.

Cements and solvents used to repair life rafts are flammable and shall be treated as such. Never smoke or permit any type of open flame near when using cements or solvents.

Dichloromethane (methylene chloride) vapor is heavier than air; adequate ventilation shall be provided for working personnel. Dichloromethane (methylene chloride) is toxic when vapors are inhaled over an extended period of time.

Acrylic monomer and polymer base adhesive MIL-A-8576, Type II, contains a volatile liquid which may prove toxic when vapors are inhaled over extended periods. Use only with adequate ventilation.

Observe fire precautions when using aliphatic naphtha, Federal Specification TT-N-95.

HANDLING PLASTICS

Wear gloves to protect hands while handling hot plastic. Boiling water shall not be used for heating acrylate base plastics.

Provide adequate ventilation when working with Furane Plastics, Epocast H-991-A, Furane hardener 941, or equivalents as these materials are toxic.

LUBRICATING OIL

Lubricating oil, MIL-L-7808 or MIL-L-23699, contains an additive which is poisonous and absorbed readily through the skin. Do not allow oil to remain on skin any longer than necessary.

FUEL

When servicing aircraft or support equipment, clean up spilled fuel with cotton mops or cotton rags. Wash off any fuel on hands, body, or clothing.

HANDLING ACID

Wear protective clothing and goggles when mixing acid with water. Always pour acid into water, never water into acid.

AIRCRAFT ENGINE VALVES

Severe personal injury may result when sodium-filled valves are mutilated. The metallic sodium used in these valves, when brought into contact with the skin (contacts moisture), gives off highly flammable hydrogen gas.

REMOVING CORROSION

Take precautions to prevent possible dust explosions when removing corrosion from steel alloys. Use goggles or face shield when removing paint or corrosion with a wire brush or by the grinding method.

OXYGEN SYSTEM

Do not allow petroleum base products to come in contact with oxygen system components, as an explosion or fire may result.

Do not use masking tape to seal openings in oxygen regulators. Masking tape constitutes a safety hazard when used on either serviceable or repairable oxygen equipment.

Do not use dry-cleaning solvent, Federal Specification P-D-680, near oxygen storage or transfer systems; the combination of these two will form a highly explosive mixture.

GROUND SUPPORT EQUIPMENT

Do not attempt to lift any load when the hydraulic axle jack is tilted.

To prevent accidental falls, appropriate maintenance platforms/safety stands illustrated in appropriate work stand manuals or any other approved locally procured/manufactured safety stands/restraint equipment will be used when working (above 10 feet) on aircraft in a non-tactical environment.

Install safety lock when an adjustable-height maintenance platform is in use.

Ensure the air hose used with compressed air is safe for the pressure being handled.

Release air pressure in air compressor tank before performing maintenance on air compressors.

Disconnect power before changing belts on electrically-driven compressors.

Disconnect electrical power before opening or disassembling any part of electrical equipment.

FIRE EXTINGUISHERS

Monobromotrifluoromethane (CF3Br) is highly volatile, but not easily detected by odor. Although nontoxic, CF3Br shall be considered in the same class as other freons and carbon dioxide, i.e., capable of causing danger to personnel primarily by reduction of oxygen available for proper breathing. The liquid may cause frostbite or low temperature burns if allowed to come in contact with the skin.

Bromochloromethane (CB) is a narcotic agent of moderate intensity, but of prolonged duration. It is considered less toxic than carbon tetrachloride, methylbromide, or the usual products of combustion. Normal precautions should be taken while using bromochloromethane, including the use of oxygen masks.

HYDRAULIC FLUID

To avoid contamination, do not use previously opened cans of hydraulic fluid. A new, sealed can of fluid must be opened and used. When opening can, clean top and use a clean, sharp, un-plated instrument to prevent contamination.

COMPRESSED AIR

Compressed air shall not be used for cleaning purposes except if reduced to less than 30 psi and then only with effective chip-guarding and personal protective equipment.

ENGINE OIL - TURBINE AND RECIPROCATING

To avoid contamination, do not use previously opened cans of engine oil, both turbine and reciprocating. A new sealed can of fluid must be opened and used. When opening can, clean top and use a clean, sharp, un-plated instrument to prevent contamination.

PROPER USE OF PLATED TOOLS

Use only chrome plated steel or un-plated steel tools for disassembly or reassembly procedures described in this manual. Use of cadmium or zinc plated tools is not permitted since these platings are prone to chipping and flaking. Should these chips or flakes become embedded in aircraft parts, galvanic corrosion will result. Should these chips or flakes enter fuel or oil wetted components, they may eventually clog the filter or produce intergranular attack of nickel or titanium base alloys at elevated temperature. All tools regardless of type plating should be serviceable and free of chipping.

NOISE HAZARD

Noise levels reached during ground runup of Army aircraft are of a level that may cause permanent hearing loss. Maintenance personnel shall wear adequate hearing protection when working on aircraft with engines in operation.

TECHNICAL MANUAL

No. 1-1500-204-23-3

HEADQUARTERS
DEPARTMENT OF THE ARMY
Washington, D.C., 31 July 1992

Aviation Unit Maintenance (Avum) And Aviation Intermediate Maintenance (Avim) Manual For

General Aircraft Maintenance (Maintenance Practices for Fuel and 011 Systems) Volume 3

REPORTING ERRORS AND RECOMMENDING IMPROVEMENTS

You can help improve this manual. if you find any mistakes, or if you know of a way to improve these procedures, please let us know. Mail your letter or DA Form 2028 (Recommended Changes to Publications and Blank Forms), or DA Form 2028-2 located in the back of this manual directly to: Commander, US Army Aviation and Troop Command, ATTN: AMSAT-I-MP, 4300 Goodfellow Blvd., St. Louis, MO 63120-1798. You may also submit your recommended changes by E-mail directly to <mpmt%avma28i)st-louis-emh7.army.mil>. A reply will be furnished directly to you. Instructions for sending an electronic 2028 may be found at the back of this manual immediately preceding the hard copy 2028.

DISTRIRUTION STATEMENT A: Approved for public release; distribution Is unlimited.

TABLE OF CONTENTS

		Page
CHAPTER 1	INTRODUCTION	1-1
CHAPTER 2	FUEL SYSTEMS	2-1
CHAPTER 3	OIL SYSTEMS	3-1
APPENDIX A	REFERENCES	A-1
GLOSSARY		Glossary-1
INDEX		Index-1

CHAPTER 1
INTRODUCTION

1-1. Purpose. This volume provides general information pertaining to the maintenance practices for fuel and oil systems. Specific maintenance practices are found in the individual aircraft maintenance manuals. This volume is of maximum benefit to the mechanic who desires information about fuel and oil identification, contamination, handling, storage, and fuel and oil system maintenance. This volume furnishes the mechanic a source of information about how to perform various mechanical functions which are used on all aircraft. This volume is not a requisitioning authority, and applicable repair parts and special tool lists should be consulted to obtain the unit of issue and Federal Stock Number of the items required for maintenance.

1-2. Scope. General information to guide aircraft maintenance personnel is covered within this volume; however, no attempt has been made to include special parts or equipment which are applicable only to individual or special aircraft.

1-3. Consumable Materials. Refer to TM 1-1500-204-23-6 for consumable materials in this volume.

CHAPTER 2
FUEL SYSTEMS

2-1. General. The fuel system supplies fuel to the carburetor or fuel control under all conditions of ground and air operation. Identification, contamination, and general maintenance practices will be covered in this chapter.

2-2. Safety Precautions and Procedures. The safety precautions and procedures below are only minimum requirements for average conditions. All personnel who are required to service, maintain, or repair fuel systems should observe the precautions described in the following paragraphs.

a. *Fuel Lines and Drains*. Keep all fuel vents and drains clean and open.

b. *Tools*. Use only sparkproof hand or air power tools in the maintenance of fuel systems.

c. *Tool Boxes*. Rubber wheeled tool boxes inside the fuel cell repair area shall be bonded to the aircraft and grounded. Tool boxes, except those mounted on rubber wheels, shall remain outside the fuel cell repair area. Tools required to perform maintenance shall be hand-carried to the aircraft in nonmetallic containers, such as cardboard boxes or canvas bags. Tool boxes locked and secured in storage racks need not be removed from the fuel cell repair area providing they remain locked and in the storage racks.

d. *Work Stands*. All work stands shall be equipped with a personnel static discharge plate made of copper, zinc or zinc coated material, or other non-oxidizing material. The plate shall be welded to the handrail, at entrance to the stand, so personnel can contact it before coming in contact with the aircraft. The plate shall be marked "PERSONNEL STATIC DISCHARGE PLATE." Work stands inside the fuel cell repair area shall be bonded to the aircraft or grounded. Properly installed and maintained ground reels located on the work stand bases can be used.

WARNING

Plastic or polyethylene buckets shall not be used for collecting or storing fuel. They cannot be grounded.

e. *Drain Containers*. Approved metal containers or bowsers shall be used to catch running fuel. When metal containers are used, they shall be bonded to the aircraft and grounded. When not in use, they shall be grounded at all times. Only approved containers shall be used to drain small amounts of residual fuel.

CAUTION

Personnel approaching an aircraft for fuel system maintenance shall ground themselves to remove static electricity.

f. *Personnel*. Before entering a fuel system repair area all personnel shall dispose of all lighted cigarettes, cigars, pipes, and any spark/flame producing device, such as matches or lighters on their person.

2-3. Fuel Identification. Turbine fuel and Aviation Gasoline (AVGAS) identification and volatility are explained in the following paragraphs. Additional information can be found in TB 55-9150-200-24.

a. *Turbine Fuels*. Two types of jet fuel are in common use. Jet A (JP-5) is a heavy kerosene having a higher flash point and lower freezing point than most kerosenes. It has a very low vapor pressure, so there is little loss of fuel from evaporation or boil off at higher altitudes. Jet B (JP-4) is a blend of gasoline and kerosene. JP-4 is the Army standard fuel for turbine engines. The difference in the specific gravity of the fuels may require fuel control adjustments. Therefore, the fuels cannot always be considered interchangeable. The critical characteristics of jet fuels JP-4 and JP-5 are shown in table 2-1.

(1) Turbine fuel identification. Because turbine fuels are not dyed, there is no on-sight identification for them. They range in color from a colorless liquid to a straw-colored liquid, depending on age or the crude petroleum source.

(2) Turbine fuel volatility. One of the most important characteristics of turbine fuel is its volatility. A high volatility is desirable to aid cold-weather starting and to make aerial restarts easier and more sure. Low volatility is desirable to reduce the possibility of vapor lock and to reduce fuel loss by evaporation. Figure 2-1 shows the vaporization characteristics of aviation fuels at atmospheric pressure.

b. Aviation Gasoline. AVGAS is a mixture of hydrocarbons. AVGAS grades which conform to MIL-G-5572 are used to power reciprocating engine aircraft. Although various AVGAS grades are available, grade 100/130 (green or blue) is the grade most used by the Army. AVGAS permits high-compression, supercharged engines to develop maximum power without pre-ignition (knocking). The Army requirement for AVGAS is decreasing and will be eliminated as reciprocating-engine aircraft are phased out of the Army inventory. Detailed guidance on specification requirements for aviation gasoline is included In MIL-HDBK-200 (latest revision) and FM 10-70.

(1) AVGAS identification. AVGAS is colored for purposes of identification. A change in color usually indicates contamination with another product or loss of fuel quality. Table 2-2 shows various AVGAS grades and their identifying colors.

(2) AVGAS volatility. Volatility is a measure of the tendency of a liquid to vaporize. AVGAS is a complex blend of volatile hydrocarbons that have a wide range of boiling points and vapor pressures. It is blended to form a straight chain of boiling points. This is necessary to obtain the required starting, acceleration, power, and fuel mixture characteristics for the engine. Vaporization characteristics are shown in figure 2-1.

Table 2-1. Critical Characteristics and Specification Requirements for Jet Fuels Used In Army Aircraft (MIL-T-5624)1

Characteristic	Specification requirement	Test method ASTM
Flash Point, °C (F), min		
Grade JP-4		
Grade JP-5	60 (140)	D93
Specific Gravity, °C		
Grade JP-4	0.785	
Grade JP-5	0.817/15	
Specific WT/U.S.	gal	
Grade JP-4	6.55	
Grade JP-5	6.82	
FSII, percent vol.	0.10-0.15	
Gravity, °API		D287
Grade JP-4	57-45	
Grade JP-5	48-36	
Freezing Point, °C, max	D2386	
Grade JP-4	-58	
Grade JP-5	-46	
Flash Point, °C, min		D56 or
Grade JP4	—	D3243
Grade Jp-5	60	

1Detailed specification is included in MIL-HDBK 200 (latest edition) and FM 10-70.

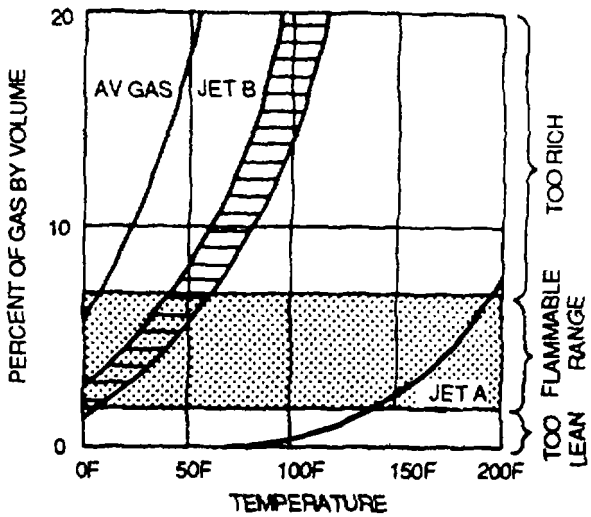

Figure 2-1. Vaporization Characteristics

Table 2-2. AVGAS Identification

Grade	Color
80/87	Red
100/130 High Lead	Green
100/130 Low Lead	Blue
115/145	Purple

2-4. Contamination of Fuels. There are several forms of contamination in aviation fuels. The higher the viscosity of the fuel, the greater is its ability to hold contaminants in suspension. For this reason, jet fuels having a high viscosity are more likely to have contaminants. Table 2-3 shows visual contaminant characteristics. Water, solids, and microbial growths are the principal types of contamination.

a. Water. Either fresh or salt water may be present in fuel, and either may be present as dissolved or free water.

(1), Dissolved water. Dissolved water is water that has been absorbed by the fuel. It cannot be seen and cannot be separated out of the fuel by either filtration or mechanical means. The danger of dissolved water is that it settles out as free water when the fuel is cooled to a temperature lower than that at which the water dissolved. Such a cooling of fuel is likely at high altitudes. Once freed, all the dangers of free water are present.

(2) Free water. Free water can be removed from fuel by adequate filtering. It can be seen in the fuel as a cloud, an emulsion, droplets or, in large amounts, as water on the bottom of a tank, sample container, or filter/separator. Free water, either fresh or salty, can freeze in the aircraft fuel system, can make certain aircraft instruments malfunction, and can corrode the components of the aircraft fuel system. (Salt water is more corrosive than fresh water.) Ice in an aircraft fuel system can make the engines fail.

b. Solids. Sediment from tanks, pipes, hoses, pumps, people, and the air contaminates fuel. The most common elements of the sediment found in aviation fuels are bits of rust, paint, metal, rubber, dust, and sand. Sediment is classified by particle size as shown in figure 2-2.

(1) Coarse sediment. Particles classified as coarse are 10 microns in size or larger (25,400 microns = 1 inch). Coarse sediment settles out of fuel easily, and it can also be removed by adequate filtering. Particles of coarse sediment clog nozzle screens, other fine screens throughout the aircraft fuel system and, most dangerously, the fuel orifices of aircraft engines. Particles of this size also get wedged in sliding valve clearances and valve shoulders where they cause excessive wear in the fuel controls and fuel-metering equipment.

(2) Fine sediment. Particles classified as fine are smaller than 10 microns in size. Removing fine sediment by settling or filtering is effective only to a limited degree; the particles can, however, be centrifuged out in a rotating chamber. Fine sediment accumulates in fuel controls and forms a dark shellaclike surface on the sliding valves. It can also form a sludge-like material that makes fuel-metering equipment operate sluggishly. Particles of fine sediment are not visible to the naked eye, but they do scatter light. This light-scattering property makes them show up as point flashes of light or as a slight haze in the fuel.

Table 2-3. Visual Contaminant Characteristics

Type contaminants	Appearance	Characteristics
Water		
Dissolved water	Not visible.	Fresh water only. Appears as cloud when fuel is cooled.
Free water	Light cloud; heavy cloud; droplets adhering to sides of bottle or gross amounts settled in bottom.	Free water may be saline water or fresh water. Cloud usually indicates water-in-fuel emulsion.
Particulate Matter		
Rust	Red or black powder; rouge, or grains. dye-like material in fuel. generally rust.	Red rust - non-magnetic May appear as Black rust - magnetic Most particulate matter is
Grit, sand, or rust	Crystalline, granular or glass-like.	Usually present in main fuel filter or fuel inlet strainer and servo supply filter. Occasionally constitutes major constituent.
Aluminum or magnesium compounds	White or gray powder or paste.	Sometimes very sticky or gelatinous when wet with water. Usually present and occasionally represents major constituent.
Microbiological Growth		
	Red-brown, gray, or black. Stringy or fibrous.	Usually found with other contaminants in the fuel. Very light weight; floats or swims in fuel longer than water droplets or solid particles. Develops only when free water is present.
Emulsions		
Water-in-fuel emulsions	Light cloud; heavy cloud.	Finely divided drops of water in fuel. Same as free water cloud. Will settle to bottom in minutes, hours, or weeks depending upon nature of emulsion.

Table 2-3. Visual Contaminant Characteristics - CONT

Type contaminants	Appearance	Characteristics
Emulsions - continued		
Fuel and water or stabilized emulsions	Reddish, brownish, grayish, or blackish. variously described as gelatinous, gummy.	Finely divided drops of fuel in Sticky material water. Contains rust or micro-biological growth which stab-lizes or firms-up the emulsion. Will adhere to many materials normally in contact with fuels. Usually present as globules or stringy, fibrous-like material in clear or cloudy fuel. Will stand from days to months without separating. This material con-tains half to three-fourths water, a small amount of fine rust or microbiological growth and is one third to one half fuel.
Miscellaneous		
Interface material	Lacy bubbles or scum at interface between fuel and water. Sometimes resembles jellyfish.	Extremely complicated chemi-cally. Occurs only when emul-sion and free water is present.
Air bubbles	Cloud in fuel.	Disperses upward within a few seconds.
Insects	Specks in fuel.	Float on top, within fuel, or settles to bottom.

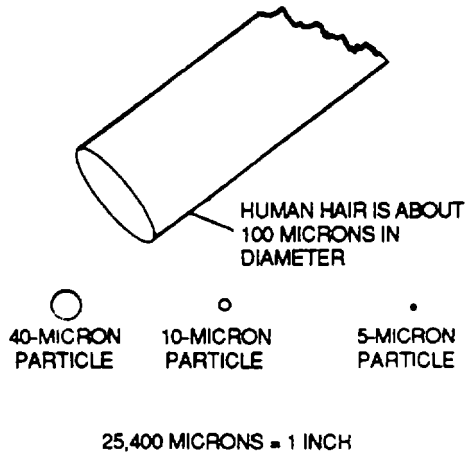

Figure 2-2. Micron Particle Size

c. Microbiological Growths. Microbiological growth is growth of living organisms (protozoa, fungi, or bacteria) at the interface between fuel and water wherever there are pockets of water in fuel tanks. If there is no water in the fuel, microbes cannot grow. The growth is brown, black, or gray and looks stringy or fibrous. Microbiological growth contaminates fuel and causes problems because the organisms hold rust and water suspended in the fuel and act as stabilizing agents for fuel/water emulsions. These suspensions cling to glass and metal and can cause false, fuel-quantity readings. They also make fuel controls operate sluggishly and make fuel flow-dividers stick. Microbiological growth in aircraft fuel is a reliable indication that the fuel filters have failed, that the water has not been properly stripped from the fuel, or that the fuel storage tanks need to be cleaned more frequently.

d. Uses of Additives to Prevent Mirobiological Growth. The addition of fuel system icing inhibitor (FSII) has helped curb microbiological growth.

However, in spite of the effectiveness of FSII, it is still very important to remove all water from aviation fuel and aircraft fuel systems.

(1) Oxidation and corrosion inhibitors. In general, ASTM specifications for jet fuels permit the use of approved oxidation and corrosion inhibitors and metal deactivators. However, the quantities and types must be declared and agreed to by the consumer. Military specifications permit use of a metal deactivator in either JP-4 orJP-5 fuel and also permit an approved corrosion inhibitor in JP-4, provided it is blended into the fuel by the supplier. MIL-T-5624 presently contains the requirement that both grade JP-4 and JP-5 contain icing inhibitors. The specification requires that these inhibitors be added at the refinery to a minimum percent volume of 0.10 and 0.15 percent maximum.

(2) Icing inhibitor. Icing inhibitor conforming to MIL-1-27686 shall be added to commercial fuel not containing an icing inhibitor during refueling operations, regardless of ambient temperatures. The additive provides anti-icing protection and also functions as a biocide to kill microbial growths in aircraft fuel systems. The additive (Prist or equivalent) is not available through the Army Supply System it is to be procured locally when needed. Refueling operations shall be accomplished in accordance with accepted commercial procedures.

(See specific aircraft manuals for any limitations.)

e. Contamination Prevention. Any time fuel is transferred, it is susceptible to contamination. The following paragraphs contain precautions to prevent fuel contamination.

(1) Fuel storage. Fuel being pumped into airpiort storage should pass through a filter-separator. The filter should meet the requirements of U.S. Government Specification MIL-F-8508A.

(2) Turbine fuel. Turbine fuels should be allowed to settle for a period of one hour per foot of depth of the fuel before being withdrawn for use. This means that ordinarily more than one storage tank must be provided for each grade of product.

(3) Storage tanks. Storage tanks should be checked with litmus paper after each new load of fuel is received and the fuel has settled. The litmus paper should remain submerged for a minimum of 15 seconds. During periods of heavy rain, underground tanks should be checked with litmus paper more frequently.

(4) Suction lines. Suction lines should be a minimum of 6 inches from, the bottom of the tank. Kerosene storage tanks should be equipped with floating type suction lines. Floating suction does not remove the bottom product, which may not have settled sufficiently. It also prevents reintroduction into the fuel of any contamination at the bottom of the tank. Floating suction is the only logical way to take full advantage of gravity in removing water and particulate matter contamination. Its importance must not be minimized.

(5) Fuel withdrawal. Fuel being withdrawn from storage should be passed through a filter separator meeting the specification MIL-F-8508A.

(6) Loading. Great care should be exercised in loading mobile fuelers to exclude airborne dust and dirt, rain or other foreign material.

(7) Tanks. To lessen the likelihood of rust and scale the tanks of mobile fuelers should be constructed of either stainless steel, nonferrous material or steel coated with a reliable, inert material.

(8) Filtering. As turbine fuel is being dispensed into the aircraft from truck or hydrant it should be filtered to a degree of 5 microns for solid particles and contain no more than 0.0015 percent of free and entrained water. Bypass valves around the filter should not be permitted.

(9) Quality control. All the quality control procedures usually followed in handling aviation gasoline should be employed. These include regular and frequent check of filter-separators; frequent quality check such as the clear and bright test. and continual emphasis on cleanliness. Examples: "Don't let the hose nozzle drag on the apron." "Keep the dust cap on the nozzle at all times when nozzle is not in use."

2-5. Fuel System Maintenance. General maintenance on fuel lines, pumps, sumps, strainers, float switches, cells, tanks, quick-disconnect couplings, and closed-circuit refueling receptacles are explained in the following paragraphs. Fuel system testing and troubleshooting are also covered. Inspection, removal, and installation are covered in TM 1-1500-204-23-2.

a. Fuel Lines. Various fuel tanks and other components are usually joined together by fuel lines made of metal, connected where flexibility is necessary, by lengths of flexible hose. Metal and flexible hose lines and inspection, removal, and installation of fuel lines on aircraft are explained in the following paragraphs.

(1) Metallines. Metal lines usually are made of stainless steel or an aluminum alloy. Check for leaks, loose anchorages, scratches, kinks, or other damage when inspecting.

(2) Flexible hose. Flexible hose is made of synthetic rubber or Teflon. Special heat-resistant hose is used where the flexible lines will be subjected to intense heat. Fire-resistant hose is used for all fuel lines in the engine compartment. Check for leakage, looseness, cracks, or other damage when inspecting.

(3) Removal and installation. Refer to TM 1-1500-204-23-2 for detailed information on fabrication, removal, and installation of fuel lines. General procedures are described in the following paragraphs.

(a) Compatibility of fittings. All fittings are to be compatible with their mating parts. Although various types of fittings appear to be interchangeable, in many cases they have different thread pitch or minor design differences which prevent proper mating and may cause the joint to leak or fail.

(b) Routing. Make sure that the line does not chafe against control cables, airframe structure, etc., or come in contact with electrical wiring or conduit. Where physical separation of the fuel lines from electrical wiring or conduit is impracticable, locate the fuel line below the wiring and clamp it securely to the airframe structure. In no case may wiring be supported by the fuel line.

(c) Alignment. Locate bends accurately so that the tubing is aligned with all support clamps and end fittings and is not drawn, pulled, or otherwise forced into place by them. Never install a straight length of tubing between two rigidly mounted fittings. Always incorporate at least one bend between such fittings to absorb strain caused by vibration and temperature changes.

(d) Bonding. Bond metallic fuel lines at each point where they are clamped to the structure. Integrally bonded and cushioned line support clamps are preferred to other clamping and bonding methods.

(e) Support of line units. To prevent possible failure, all fittings heavy enough to cause the line to sag should be supported by means other than the tubing.

(f) Support clamps. Rubber cushioned clamps should be installed in a manner to ensure ¼ inch minimum clearance between aircraft structure and fuel lines. They should be Installed so that the weight of the line tends to tighten attaching hardware. Support clamps should be spaced as shown in table 2-4 or, if near a bend, as close as possible to reduce overhang as shown in figure 2-3.

Table 2-4. Support Clamp Spacing

Tube outer diameter (Inches)	Approximate distance between supports (inches)
1/8-3/16	9
1/4-5/16	12
3/8-1/2	16
5/8-3/4	22
1-1-1/4	30
1-1/2-2	40

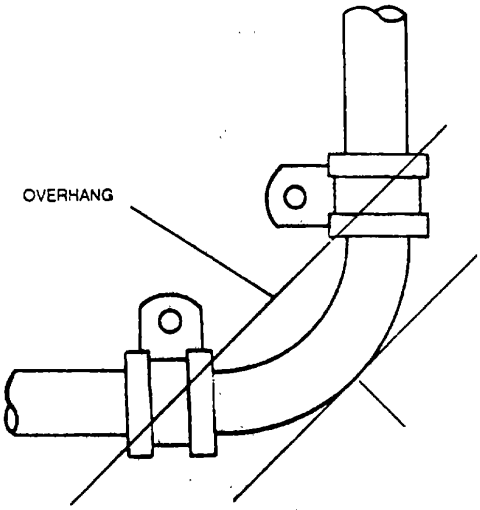

Figure 2-3. Clamp Location for Tube Bends

b. Fuel Pumps. Fuel pumps, including auxiliary, hand, and engine driven, may be time replacement items. The time replacement schedule is given in applicable inspection requirements manual. When pumps are removed for replacement, fittings and plugs shall remain with aircraft for use on replacement pump.

(1) Auxiliary. The auxiliary (booster) pump is mounted at the tank outlet within a detachable sump, or is submerged in fuel at the bottom of the tank. The auxiliary pump, as shown in figure 2-4, supplies fuel under pressure to the inlet of the engine-driven fuel pump. This type of pump is an essential part of the fuel system, particularly at high altitudes, to keep the pressure on the suction side of the engine-driven pump from becoming low enough to permit the fuel to boil. This booster pump is also used to transfer fuel from one tank

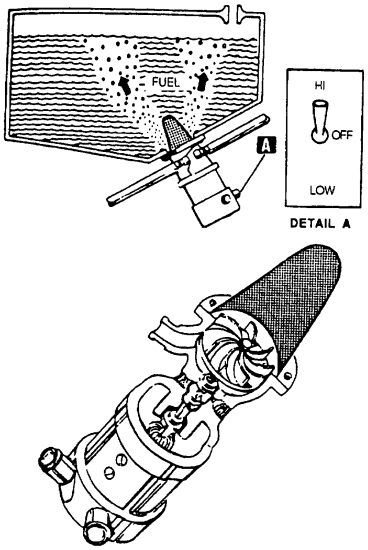

Figure 2-4. Auxiliary (Booster) Fuel Pump

to another, to supply fuel under pressure for priming when starting the engine, and, as an emergency unit, to supply fuel to the carburetor in case the engine-driven pump fails. As a precautionary measure, the booster pump is always turned on during takeoffs and landings to ensure a positive supply of fuel.

(2) Hand. The hand, or wobble, pump is frequently used on light aircraft. It is generally located near other fuel system components and operated from the cockpit by suitable controls. No current Army aircraft have hand pumps.

(3) Engine-driven. The engine-driven pump is usually mounted on the accessory section of the engine. The purpose of the engine-driven fuel pump is to deliver a continuous supply of fuel at the proper pressure at all times during engine operation. The pump widely used at the present time is the positive-displacement, rotary-vane-type pump as shown in figure 2-5.

c. Fuel Sumps. Usually a sump and drain are provided at the lowest point in the fuel tank for the accumulation of contaminants. These sumps must be drained prior to flight to inspect for fuel contamination.

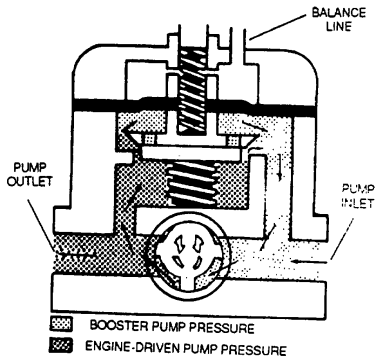

Figure 2-5. Engine-Driven Fuel Pump

NOTE

When water is noted in fuel sumps, continue to drain fuel until water is no longer evident in drained fuel.

d. *Fuel Strainers.* Fuel strainers remove dirt, water, and other foreign particles from the fuel. They are usually located in the fuel tank outlets or as part of the auxiliary pump assembly. They are also installed in carburetors and other fuel-metering units.

(1) Types. Fuel tank, fuel sump, and carburetor/fuel metering strainers are the types explained below. Various types are also shown in figure 2-6.

(a) Fuel tank. Fuel tank strainers have a comparatively coarse mesh to prevent large particles from entering the fuel system.

(b) Fuel sump. Fuel sump strainers are located at a low point between the fuel tank and the engine-driven pump. The mesh size is finer, usually being 40 or more mesh per inch.

(c) Carburetor/fuel metering. Carburetors and other fuel-metering devices have screens or sintered metal filters. These are usually designed to remove all particles larger than 40 microns.

(2) Maintenance. Fuel strainer removal, inspection, cleaning, and replacement should be accomplished in accordance with the applicable aircraft maintenance manual. General procedures are covered in the following paragraphs.

(a) Removal. Remove strainer in accordance with aircraft maintenance manual making sure to place the fuel selector valve in the off position prior to removal.

(b) Inspection. Inspect strainer for dents, tears, clogging, foreign particles, and separation of solder joints. Inspect body and cap for cracks or other damage. Replace strainer if punctured.

WARNING

- **Drycleaning solvent is flammable and solvent vapors are toxic. Use P-D-680, Type II Solvent in a well-ventilated area. Keep away from open flames. Avoid prolonged solvent contact with skin.**
- When using air pressure, be extremely careful. Do not blow stream of air toward yourself or any other person. Users of air pressure and personnel within the immediate area shall wear safety glasses, goggles, or face shield. Ear protection may be required. Pressure will not exceed 30 psig. Failure to comply may result in injury.

(c) Cleaning. Clean strainers with dry-cleaning solvent P-D-680, Type II. Blow dry with filtered, low pressure, compressed air.

(d) Replacement. Replace strainer in accordance with applicable aircraft maintenance manual.

e. *Float Switches.* Float switches are used to illuminate caution lights located on the cockpit instrument panel. Illumination usually occurs when the fuel level falls below a certain point. A typical float switch unit is shown in figure 2-7. Inspect switch for cracks, damage, corrosion, and security. Replace if damage exceeds inspection requirements in the applicable maintenance manual.

f. *Fuel Cells and Tanks.* Fuel Cell and tank types, inspection, maintenance, purging, preservation handling, storage, and depreservation are described in the following paragraphs.

(1) Types. There are two basic fuel cell and tank types. These types are the fuel cell and the integral fuel tank.

(a) Integral. Integral tanks are compartments of the structure of an aircraft (as shown in figure 2-8) designed to contain fuel. They are manufactured with a liquid-tight boundary, commonly called a seal plane, which has been sealed with gaskets, structural adhesives, elastic films or other sealants. They have been built into both the wing and fuselage sections of the aircraft with the primary structure forming the boundaries of the fuel tanks.

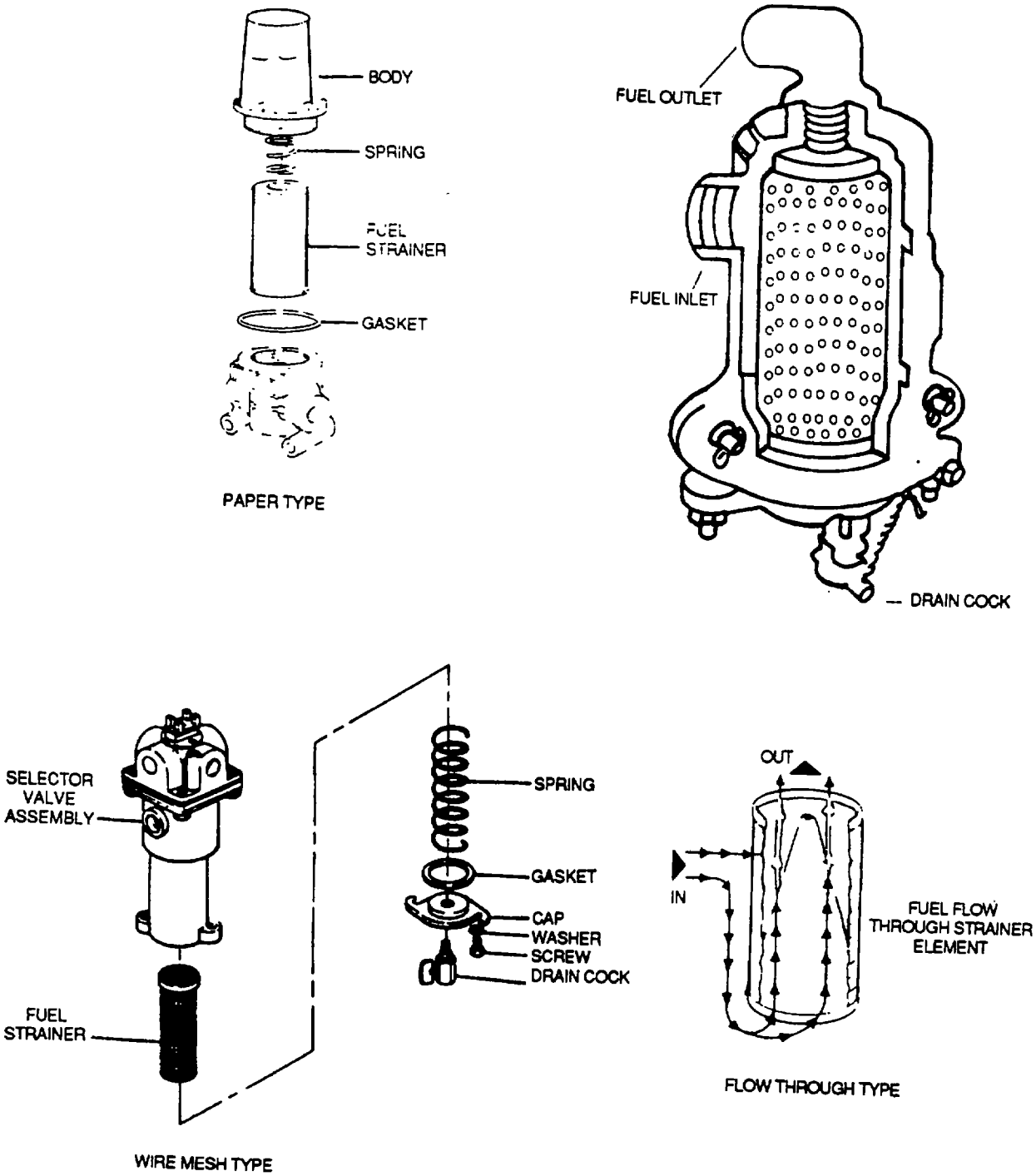

Figure 2-6. Fuel Strainers

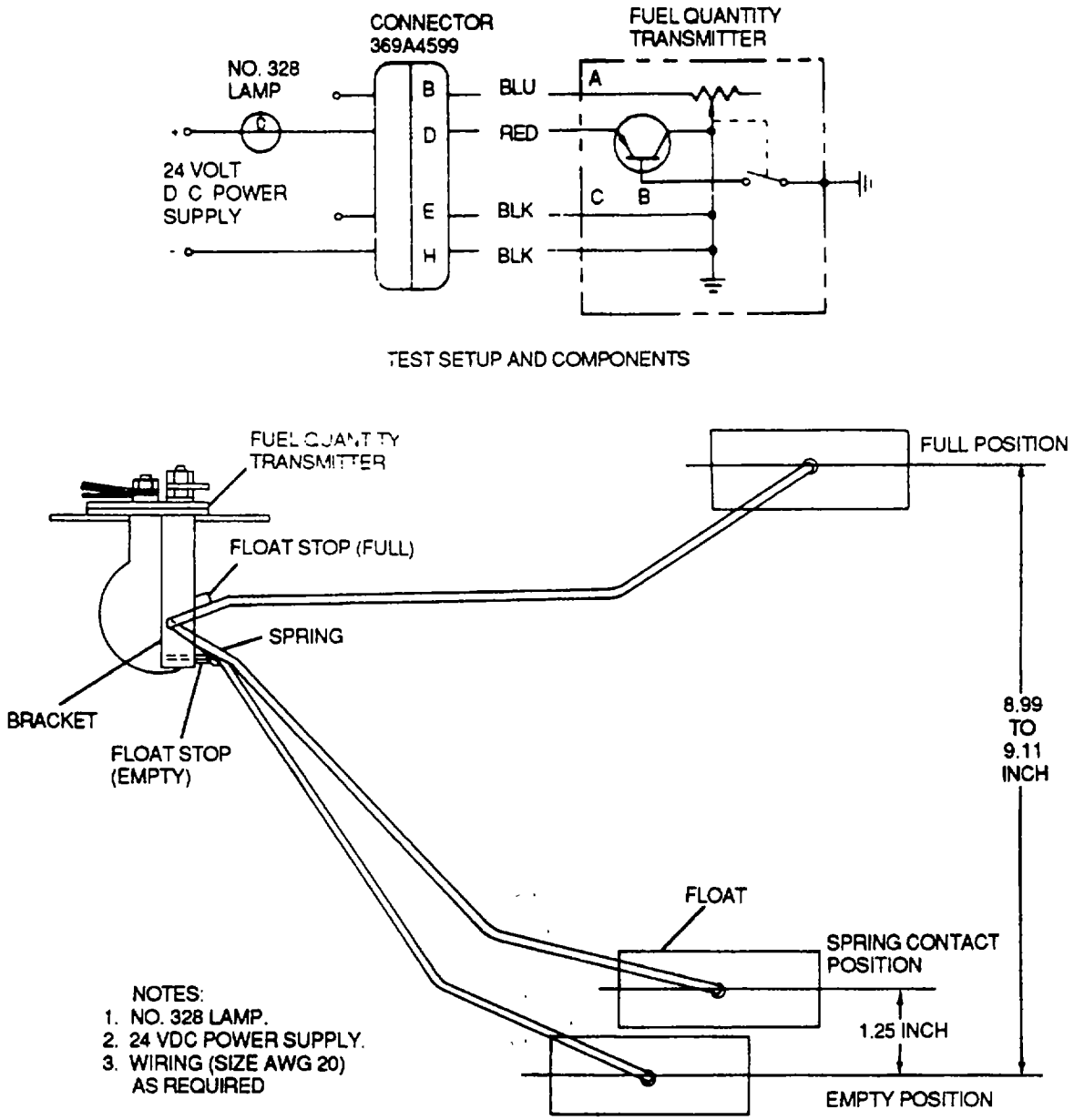

Figure 2-7. Float Switch Unit

(b) Cells. A fuel cell is a flexible bag contoured to the shape of a particular fuselage or wing cavity and designed to contain fuel. The fuel cells are manufactured in three basic types: Self-sealing, bladder, and combination (part bladder and part self-sealing.) There have been many names given to fuel cells such as Vithane, Pliocel and Line-a-cell, which are trade names. The serviceability limits of self-sealing and bladder-type fuel cells are listed in tables 2-5 and 2-6.

NOTE

Use mirrors to inspect areas which are not otherwise completely visible.

(2) Inspection. Inspection of integral fuel tanks and fuel cells are explained in the following paragraphs.

(a) Integral. Inspect leak area carefully for defective sealant as follows:

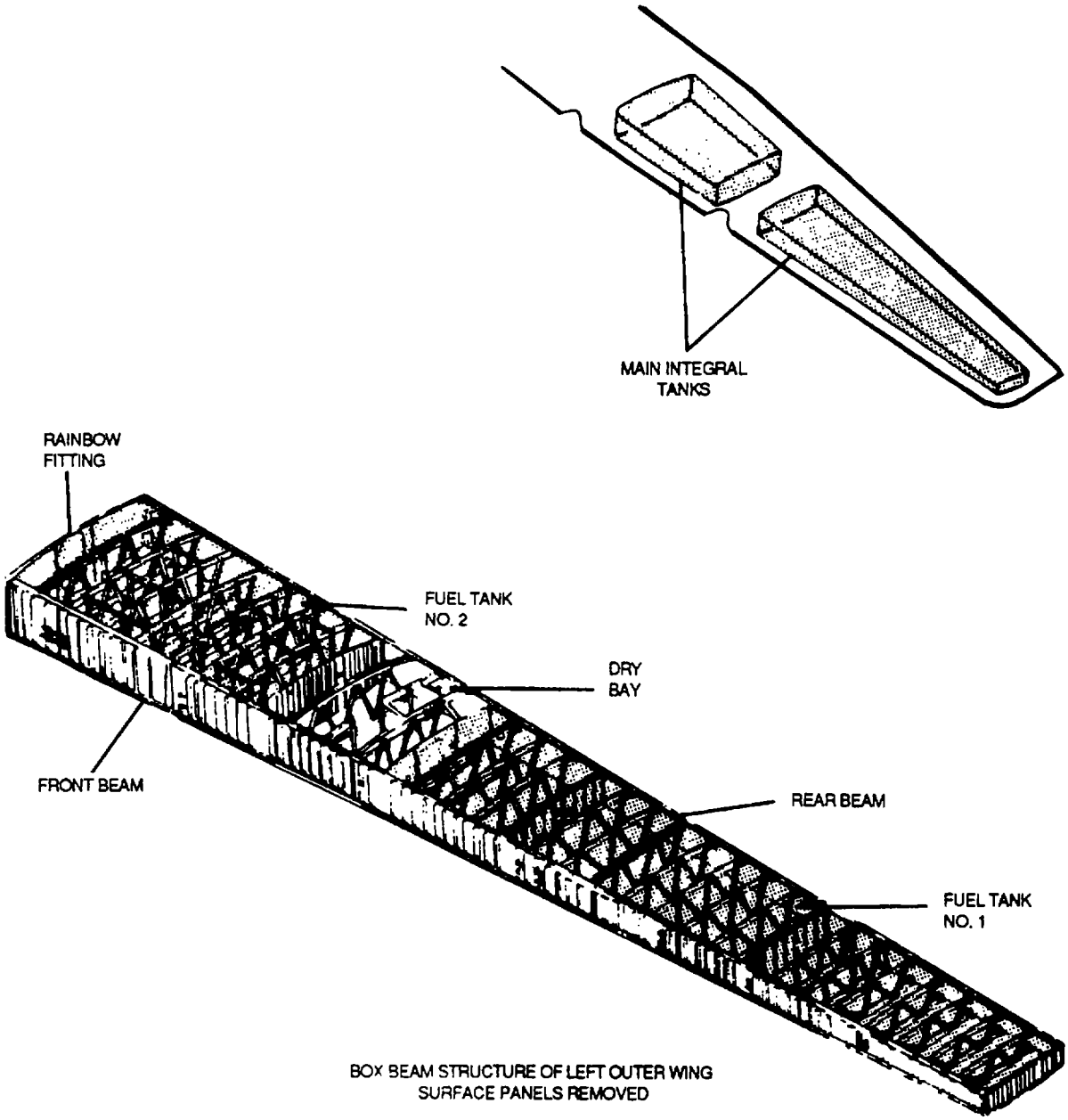

Figure 2-8. Integral Fuel Tanks

Table 2-5. Serviceable Limits (Self-Sealing Cells)

Condition	Limit
Cell Interior	
Loose liner at throat of fitting.	Looseness of 1/2 inch in width around entire circumference at throat of fitting.
Edge looseness at liner lap.	Acceptable up to 1/4 inch maximum width for entire length of liner lap, provided 1-inch bond is maintained.
Edge looseness on liner reinforcements corner patches and chafing patches.	Maximum looseness of 1/2 inch provided loose area does not exceed 15 percent of total area. Blisters or separations other than in the edge area allowable up to 15 percent of the total area.
Looseness under cemented components such as attaching straps and baffle shoes.	Looseness of 15 percent of individual area provided 1/4-inch bond is maintained around edge.
Blisters between liner and fitting flanges.	Maximum diameter of 1/4 inch; maximum one per lineal foot and two per fitting provided 1-inch bond is maintained.
Damaged grommets in accessories.	Acceptable provided serviceability is not affected.
Damaged coating on accessories (metal, wood, or rubber).	Acceptable provided rust, corrosion, or other deterioration is not present.
Checking due to weather, ozone, dry cracking, or surface imperfections.	Acceptable provided there is no indication of activation.
Blisters in linear laps.	Maximum diameter of 1/4 inch average one per lineal foot of splice with a maximum of five in any one 5-foot length of splices.
Channels in inner linear laps.	Maximum dimension of 1/8 inch by 3 inches with a maximum of one in any 5 lineal feet of splice.
Channels around entire outer edge of	Maximum width of 1/4 inch. fitting flange.
Channels at tapered construction stepoff area or edge of lap splices of ply.	Maximum width of 1/4 inch for entire length of lap.
Open and channels in three ply liner overlaps or tailored corners.	Maximum dimension of 1/8 inch by 3 inches provided 1 inch minimum bond is maintained between end of channel and sealant.

Table 2-5. Serviceable Limits (Self-Sealing Cells)-CONT

Condition	Limit
Cell Exterior	
Blisters or ply separation between any plies except liner and sealant.	Maximum lineal dimension of 1 inch.
Skim coat blisters.	Acceptable.
Loose hanger straps or hanger attaching points.	Acceptable up to 15 percent of total area provided 1/4-inch bond is maintained around the edge.
Loose or damaged tapes, corner patches, and other outside accessories.	Maximum allowable looseness of 1/2 inch provided looseness does not exceed 15 percent of total area.
Cell Interior	
Checking due to weather, ozone, dry cracking, or surface imperfections.	Acceptable.
Damaged grommets in accessories.	Acceptable, provided serviceability is not affected.
Damaged through outer cord or fabric ply.	Not acceptable.
Channels or bridging of outer plies at cord or fabric splice.	Maximum width of 1/2 inch for full length of splice.
Outer ply cuts or splits parallel to cords where cords are not damaged.	Not acceptable; may result in outside activation.
Fittings	
Rubber Face Fittings:	
Gouges, splits, or deep indentations on the sealing surfaces.	Maximum depth of 1/16 inch by 1/16 inch maximum length.
Weather checking of surfaces other than sealing surfaces.	Acceptable.
O-Ring Fittings:	
Sealing surface without groove:	
Scratches within sealing area.	Not acceptable.
Burrs on mating surface.	Not acceptable.

Table 2-5. Serviceable Limits (Self-Sealing Cells)-CONT

Condition	Limit
Fittings-continued	
Damage of protective coating.	Acceptable.
Corrosion or rust.	Not acceptable.
Sealing surface with groove:	
Minor surface damage outside O-ring groove other than rust, corrosion, or burrs.	Acceptable.
Physical damage to O-ring groove.	Not acceptable.
Corrosion or rust.	Not acceptable.
Cement or other foreign matter in O-ring groove.	Not acceptable.
Bent or broken fittings.	Not acceptable.
Thread damaged fittings.	Acceptable when serviceability is not affected.

Table 2-6. Serviceable Limits (Bladder-Type Cells)

Condition	Limit
Cell Interior	
Loose liner at throat of fitting.	Looseness of 1/2 inch in width around entire circumference at throat of fitting.
Loose liner lap.	Maximum edge width looseness of 1/4-inch liner lap and full length of lap provided 1-inch bond is maintained.
Edge looseness on liner reinforcement and chafing patches.	Maximum allowable looseness of 1/2 inch provided this looseness does not exceed 15 percent of total area: Blisters or separations other than in edge area allowable up to 15 percent of total area.
Looseness of cemented internal support components such as attaching straps, baffle supports, and such.	Acceptable up to 15 percent of component area provided 1/4-inch bond is maintained around edge.
Blisters between fitting flange and adjacent ply.	Maximum dimension of 1/4 inch; maximum one per fitting provided 1-inch bond is maintained.

Table 2-6. Serviceable Limits (Bladder-Type Cells)-CONT

Condition	Limit
Cell Interior-continued	
Damaged grommets in accessories.	Acceptable provided serviceability is not affected.
Damaged coating on accessories (metal, wood, or rubber).	Acceptable provided no rust, corrosion or deterioration is apparent.
Weather checking or minor surface imperfections in liner ply and reinforcements.	Acceptable provided serviceability is not affected.
Blisters between liner laps.	Maximum dimension of 1/4 inch; average one per 5 lineal feet of splice with a maximum of five in any one 5-foot length of splice.
Blisters between plies (in coil panels).	Maximum dimension of 1/4 inch; minimum 6-inch bonds between blisters and no more than one per square foot of cell area.
Channels in liner laps.	Maximum dimensions of 1/8 inch by 3 inches with a maximum of one in any 5 lineal feet of lap.
Channels around entire outer edge of fitting flange.	Maximum width of 1/8 inch around entire fitting flange.
Buffing through inner liner.	Not acceptable.
Cell Exterior	
Exposed fabric.	Acceptable if fabric is not damaged.
Delamination between pies.	Maximum dimension of 1-inch; average of one per 5 square feet of area with a maximum of five in any one 5 square feet of area; minimum 5-inch solid bond between delaminations.
Cuts or holes in inner liners.	Not acceptable.
Skim coat blisters.	Acceptable.
Lap splice edge looseness.	Maximum dimension of 1/4 inch by 3 inches provided there are no more than one per lineal foot.
Loose or damaged hanger straps or hanger attaching points.	Acceptable up to 15 percent of component area provided 1/4-inch solid bond is maintained around edge.
Skim coat off outer ply.	Acceptable provided cords or fabrics are not out or broken.

Table 2-6. Serviceable Limits (Bladder-Type Cells)-CONT

Condition	Limit
Cell Exterior-continued	
Mislocated, blistered, split, or weather-checked tape.	Acceptable; missing tape to be replaced.
Blisters or looseness between labels or decals and body of cell.	Acceptable.
Weather checked or surface imperfections in outer ply or reinforcements.	Acceptable if fabric is not damaged or broken.
Blistered, loose or missing lacquer coating.	Acceptable.
Blisters between fitting flange and adjacent ply. 1-inch bond is maintained.	Maximum dimension of 1/4 inch; maximum of one per lineal foot and two per fitting provided
Delamination between plies.	Maximum dimension of 1 inch; average of one per 5 square feet or area with maximum of five in any one 5 square foot area; minimum 5-inch solid bond between delamination.
Damaged grommets in accessories.	Acceptable provided serviceability is not affected.
Blisters between outer ply laps.	Maximum dimension of 1/4 inch; average one per 5 lineal feet of splice with a maximum of five in any one 5-foot length of splice.
Blisters between plies (in cell panels).	Maximum dimension of 1/4 inch; minimum 8-inch bond between blisters and no more than one per square foot of cell area.
Channels in outer ply laps.	Channels 1/4 inch wide running entire length of lap.
Channels around entire edge of fitting flange.	Maximum of 1/8 inch around entire fitting flange.
Damage through any cord or fabric ply.	Not acceptable.
Fittings	
Rubber Face Fittings:	
Gouges, splits, or indentation on the sealing surface.	Maximum depth of 1/16 inch by 1/16-inch maximum length.
Weather checking of surfaces other than sealing surface.	Acceptable.

Table 2-6. Serviceable Limits (Bladder-Type Cells)

Condition	Limit
Fittings-continued	
O-Ring Fittings:	
Sealing surface without groove:	
Scratches within sealing area.	Not acceptable.
Burrs on mating surface.	Not acceptable.
Corrosion or rust.	Not acceptable.
Sealing surface with grooves:	
Minor surface damage outside O-ring groove other than rust, corrosion, or burrs.	Acceptable.
Physical damage to O-ring groove.	Not acceptable.
Corrosion or rust.	Not acceptable.
Cement or other foreign matter in O-ring groove.	Not acceptable.
Bent or broken fittings and/or damaged dome nuts.	Not acceptable.
Elongated or torn holes in fitting areas of cell using removable two-piece metal corn-pression fittings.	Acceptable provided the elongation of tear does not extend beyond the outer or inner sealing groove of the inner ring, or over one-half the distance to the next hole.

1 Inspect previously repaired areas.

2 Check for cracks, scuffs or nicks.

3 Check for indications of air bubbles and shrinkage.

WARNING

When using air pressure, be extremely careful. Do not blow stream of air toward yourself or any other person. Users of air pressure and personnel within the immediate area shall wear safety glasses, goggles, or face shield. Ear protection may be required. Pressure will not exceed 30 psig. Dirt and small particles may be blown about, possibly causing injury to personnel.

4 Inspect for lack of adhesion by applying air at a maximum of 100 psi with an air gun placed approximately 1/2 inch from the sealant. If loose sealant is found, cut through the sealant and strip by pulling away from the structure. Strip sealant until it breaks rather than pulls away from the tank structure. Take extreme care not to damage the structure or the corrosion control coating.

5 Check for loss of luster, discoloration, chalking or loss of topcoat.

6 Inspect for loss of elasticity by firmly pressing sealant with a blunt metal punch of not less than 3/16 inch diameter. The sealant is good if it gives and returns to its original position; it is defective if the sealant breaks and holds its pressed position.

7 Inspect for loose, cracked, or missing fasteners.

NOTE

Visible defects in sealant or the structure are not necessarily the source of a true leak. Continue visual inspection until the entire suspected leak area has been carefully inspected. Mark all defects.

(b) Cells. Inspect fuel cells for wear and damage. Refer to tables 2-5 and 2-6 for serviceable limits.

(3) Maintenance. Maintenance for fuel tanks and cells includes inspection for damage and leak testing. Tank sumps must be drained prior to flight to remove any contaminants. Fuel tank strainers must be cleaned and inspected on a regular basis. Fuel tank pumps must be replaced as required. All repairs should be made in accordance with the applicable aircraft maintenance manuals.

(4) Purging. Fuel cells may be purged and preserved by either of the following methods. The method to be used will be determined by the availability of preserving oil, equipment, number of aircraft involved, cost of preserving agent, availability of C02 or nitrogen gas, time, manpower, and skills available to perform the operation.

(a) Primary method. If an adequate supply of lubricating oil, MIL-L-6081, grade 1010, and the necessary defueling equipment is available, purge and preserve the fuel cells as follows:

WARNING

- **The aircraft and all equipment used in performing the purging operation must be properly grounded. This includes defueling equipment, work stands, purging equipment, and any powered or pneumatic devices. Ungrounded equipment may produce static electricity which can ignite fuel vapors.**
- **Work stands shall be equipped with a personnel static discharge plate of copper or zinc. The plate shall be attached in such a position so that personnel can contact the plate before coming in contact with the aircraft. High static electrical charges are created by the contact and separation of unlike substances, or by any sort of motion of persons or material. These charges are a constant source of danger when generated in the presence of fuels or flammable vapors.**

WARNING

Fuel tanks shall not be drained near the end of the working day and then allowed to stand empty overnight. This action could make a perfect set of conditions for producing explosive vapors. The critical fuel-air ratio could develop a residue fuel drains down the sides of the tank, forms puddles, and evaporates into the air of the tank.

1 Drain fuel cells.

2 The flashpoint of empty fuel cells may be reduced by pouring approximately five gallons of lubricating oil, MIL-L-6081, grade 1010, into each cell.

NOTE

A larger amount of flushing oil may be required to flush large fuel cells which are installed in the aircraft or multiple cells with one fuel opening and interconnecting fuel lines. The important thing to remember is that the bottom of each fuel cell must be flushed. Reduction of the flashpoint in purging operations will reduce the amount of lubricating oil necessary when an assembly line operation is set up.

3 When cell is completely drained, close drain valve and fill cell with lubricating oil, MIL-L-6081, grade 1010. Allow oil to remain in fuel cell for at least eight to ten hours.

4 Drain lubricating oil from fuel cell and save to flush other cells.

5 After two or three hours, test fuel cells with a combustible gas indicator for presence of fuel vapors. If an unsafe condition exists, discard drained lubricating oil. Reflush with fresh oil until a safe reading is obtained.

6 Attach a tag to the fuel filler cap with the following information printed on it: This fuel cell has been preserved with lubricating oil, MIL-L-6081, grade 1010. No flushing is required during depreservation.

(b) Alternate method. If the proper equipment is not available or the lubricating oil supply, MIL-L-6081, is limited, use the following procedures to preserve the fuel system:

1 Drain and flush fuel cell in accordance with paragraph 4-5f(4)(a) 1 and 2.

CAUTION

Use only dehydrated air. Residual moisture may cause contamination of the fuel when the cell is refilled.

2 With drains and vents open, and filler cap off, introduce into filler neck a reduced pressure air hose supplying air through a one-quarter inch orifice at approximately fifty psi. Purge fuel tank for approximately one-half hour. Close all drains.

3 Purge fuel cells with CO_2 or nitrogen gas.

WARNING

- **When using a fire extinguisher bottle as a source of CO_2 for purging fuel tanks, regardless of the size of the bottle used, the fiber horn shall be removed, not only because it is too large for insertion into the tank filler neck, but to avoid generating static electrical charges which can build up by gas moving rapidly through the horn. The nozzle, as well as the bottle itself, must be grounded to the aircraft.**
- **The CO_2 must be discharged into fuel tanks slowly, at a rate of one pound per minute. $C0_2$ must be released slowly, because the rapid passage of a gas through a hose can generate static electricity.**

WARNING

A very rapid rate of discharge allows rapid expansion of the CO_2 gas when it flows into a fuel cell. The expanding gas can lower the temperature to the point that it will cause damage to the cell.

NOTE

- **The size of the $C0_2$ bottle used can be varied to meet existing conditions. The fifteen pound size is handy.**
- **The total amount recommended is based on the quantity usually needed to purge a tank or tanks of the size under discussion. However, more may be needed to obtain a safe reading on the combustible gas indicator.**
- **It is permissible to use nitrogen or other inert gas in place of the $C0_2$ gas called out in any of the purging procedures. The same precautionary measures stated above shall be observed.**

4 Introduce into fuel cell filler neck CO_2 or nitrogen from a tank set to discharge at a rate of not more than one pound of purging gas per minute.

5 Use not less than three pounds of $C0_2$ or nitrogen to purge fuel cells.

NOTE

Larger amounts of CO2 or nitrogen gas must be used to purge large fuel cells or multiple fuel cells with one filler neck.

6 After purging of the fuel cell has been completed, wait approximately two to three hours, and test fuel cell for the presence of dangerous fuel vapors with a combustible gas exists, use additional purging gas until a satisfactory test is made.

7 Preserve fuel cell by coating all interior surfaces with lubricating oil, MIL-L-6081, grade 1010.

8 Attach a tag to the fuel filler cap with the following information printed on it: This fuel cell has been preserved with lubricating oil, MIL-L-6081, grade 1010. No flushing required during depreservation.

(5) Preservation. General preservation procedures for storage or shipment of fuel cells are explained in the following paragraphs. Special instructions for Goodyear Nylon (PLIOCEL) fuel cells are also explained.

CAUTION

Extreme care must be taken in the cleaning of fuel cells to prevent abrasion or other injury, or the cell may be permanently damaged.

(a) General fuel cell cleaning. Remove all foreign material from the exterior of the cell with a clean, soft cloth or a soft fiber brush. If additional cleaning is necessary, wash exterior of cell with a soap paste, P-S-560, and water at a maximum temperature of 180°F (82.2°C). After cleaning, remove all soap residue with clean hot water and dry thoroughly. Interior sediments or other contaminants should be wiped out with a dry, clean, soft cloth and/or flushed out with lubricating oil, MIL-L-15016, MIL-L-6081, or VV-L-825. Drain excess oil, if applicable.

(b) PLIOCEL cleaning. Remove all foreign material from the exterior of the cell with clean, dry, soft cloth or a soft fiber brush. If additional cleaning is necessary, clean with a soft cloth moistened with methylethylketone, TT-M-261. Care should be taken to remove all of the chemigum coating on the exterior of the cell. Interior sediments or other contaminants should be wiped out with a dry, clean soft cloth and/or flushed with a solution of equal parts of water and glycerine. Drain the excess glycerine solution, if applicable.

WARNING

Drycleaning solvent is flammable and solvent vapors are toxic. Use P-D-680 Type II Solvent in a well-ventilated area. Keep away from open flames. Avoid prolonged solvent contact with skin.

NOTE

- **All steam lines used to clean tanks must be properly grounded at discharge end of line to prevent possibility of static discharge.**
- **Do not allow live steam to jet directly onto metal of tank. Use diffuser plate or keep steam jet at least 20 inches from tank surfaces.**

(c) Metal tank cleaning. When necessary, clean tank exterior using drycleaning solvent, P-D- 680, Type II. Thoroughly flush tank interior with hot water admitted at bottom of tank. Allow to overflow at top. After flushing with water, mount tank into position with one opening at top of tank and one opening at lowest point at bottom of tank. Close all other openings. Clean tank for a minimum of 3 hours with live steam. Do not use steam vapors in lieu of live steam cleaning.

(d) General fuel cell preservation. If the interior of the fuel cell was not completely coated with lubrication oil during the cleaning process, coat the interior of the fuel cell with one of the lubricating oils referenced in paragraph (a). This coating may be applied by painting, spraying, fogging, or sloshing. Drain excess oil prior to storage or shipment. Preserve all metal fittings with corrosion preventive compound, MIL-C-16173, grade 2.

CAUTION

Make certain that the corrosion preservative compound does not come in contact with the rubber portion of the fuel cells. The rubber may become deteriorated and decrease the integrity of the tank.

NOTE

It is not necessary to preserve the fuel cells which will be fueled in 10 days or less.

(e) PLIOCEL preservation. If the interior of the cell was not completely coated with the glycerine during the cleaning process, coat the interior of fuel cell with a solution of equal parts of water and glycerine. This coating may be applied by painting, spraying, fogging, or sloshing. Drain the excess glycerine solution prior to storage or shipment. Preserve metal fittings with corrosion preventive compound, MIL-C-16173, grade 2. Cover all small openings with grade A barrier material, MIL-B-121, and secure with tape, PPP-T-60. Install original cover plates on all access openings. If cover plates are not available, install polyethylene-lined (L-P-378) plywood plates.

NOTE

This operation should be done in a well ventilated room to avoid health and fire hazards.

(f) Metal tank preservation. Using aromatic, fuel resistant lacquer, MIL-L-6047, slush the tank interior. Thoroughly drain tank. Rotate as necessary to remove any puddles. Coating must be thin, without puddles. Immediately start aerating tank with air heated to 120 °F (49 °C) for a minimum of 2 hours. Continue hot air circulation until a firm thumb pressure will not move coating. Allow lacquer to completely cure in a warm dry atmosphere for a minimum of 24 hours. Even when completely dry, this material has a tacky surface. Complete solvent evaporation must be ensured. Otherwise, deterioration will occur when the lacquerfilm is exposed to fuel.

(6) Handling. Fuel cells should not be handled any more than necessary. Observe the following procedures for handling fuel cells:

(a) Do not remove cells from original containers until needed for installation.

(b) When a cell is uncrated for installation, retain crate for use in packing cell which is removed from service.

(c) Cells provided with supporting ribs will have these ribs installed at all times, except when removed to allow cells to be collapsed immediately prior to installation or removal. All cells not provided with ribs will have a temporary wood brace fitted internally to support cell in normal position while in storage.

(d) Do not lift or support cells by fittings.

(e) Cells should be transported only on dollys or trucks.

(f) Handle cells with extreme care to prevent their coming in contact with sharp or pointed objects or abrasive surfaces.

(g) Do not bend or fold cold cells. When cells have been stored at low temperatures, allow sufficient time for cell materials to reach temperatures of approximately 70 °F (21 °C) before flexing.

(h) Thoroughly inspect interior of fuel cell for dirt, foreign objects/material prior to installation of tank fittings.

(7) Storage. Prepare the cleaned and preserved fuel cell for storage as follows:

(a) Roll or fold flexible bladder type or Goodyear Nylon (Pliocel) fuel cells as smoothly as possible, and place a roll of corrugated fiberboard, PPP-F-320, covered with polythylene sheeting, L-P-378, inside each fold or roll to prevent creasing.

NOTE

· Self-sealing fuel cells cannot be folded or collapsed for storage; however, they will be wrapped in accordance with paragraph (a). Cells having suspension straps will be hung in a cleated plywood box, PPP-B-601, or other suitable wooden box in the normal on aircraft position with dunnage used to support this configuration. Cells not having suspension straps must be supported inside and out with dunnage.

· Dunnage may consist of wood, fiberboard, PPP-P-291 or PPP-F-320, rubberized hard, PPP-C-1 120, or foam plastics, PPP-C-850, MIL-P-26514. All dunnage will be wrapped with polyethylene sheeting, L-P-378, or a similar plastic to prevent abrasion and contamination. The dunnage will be so placed as to provide support for the fuel cells in the box in the on aircraft configuration. All self-sealing fuel cells must be supported to prevent collapse and creasing.

(b) Wrap the cell in wrapping paper, UU-P-268, MIL-P-17667, grade A barrier material. MIL-B-121, or polyethylene sheeting, L-P-378, and pack the wrapped cell in a fiberboard box and close box by any suitable means.

NOTE

When boxes cannot be obtained, the fuel cells may be stored for a short period of time on a specially constructed rack which will adequately support the cells. Cells may also be temporarily stored with only the interior dunnage in place; however, these cells cannot be stacked.

(c) Mark the fuel cell in accordance with MIL-STD-129. If the fuel cell is temporarily stored and not boxed, the same information will be placed on a tag and the tag securely fastened to the cell.

(d) Store cells in a cool, dry area, free from drafts, dust, and ozone, and out of direct sunlight or direct contact with the ground.

(e) Stack crated cells on widest side of crate, never on end, and not to the extent that crushing of lowest crate will result.

(f) Arrange cells in storage to ensure use of oldest units first.

(8) Depreservation. The following procedures should be used to depreserve fuel cells:

CAUTION

To prevent damage to fuel cells, remove all sharp objects from pockets and wear covers over shoes.

(a) Remove all access panels needed to inspect the inside of the fuel cell.

WARNING

To prevent asphyxiation from fuel, oil and alcohol fumes, you must wear protective clothing, i.e., an apron, a respirator, a face shield and rubber gloves. Use an air compressor to continuously pump air into the tank when personnel are in the tank. Ground the air hose to the tank. Assign a person to monitor the person in the tank in the event he is overcome by fumes.

(b) Inspect the inside of the fuel cell for fungus contamination.

(c) If fungus is present, clean the contaminated cell as follows:

1 Mix 70 percent ethyl alcohol, denatured, grade Ill, O-E-760, NSN 6810-00-201-0907, with 30 percent water for a cleaning agent.

2 Wipe the complete interior of the cell. Use a clean lint free cloth, CCC-C-46A, NSN 7920-00-292-9204.

(d) Spray the inside of the fuel cell with approximately 10 gallons of fuel. For type fuel refer to the applicable aircraft manual.

(e) Drain the flushing fuel and install the cell. Check for leaks using the instructions in the applicable aircraft manual.

g. Testing Fuel Systems and Tanks/Cells for Leaks. Leak test methods, classification of leaks, and approved testing fluids are explained below. Leak source, path, and exit should always be considered. Figures 2-9 through 2-13 show various leak paths.

(1) Methods. The following paragraphs describe detecting and locating leaks.

(a) Introduction. Dyed fuel may be used for static leak detection of JP-4 fuel cells and complete fuel systems. In-flight tests to detect leaks, which cannot be detected by static or engine runup test may be used. However, the use of in-flight tests requires special approval of the maintenance officer.

(b) Preparation of dye solution. The quantities of liquid dye to be used and the mixing ratios are as specified in table 2-7.

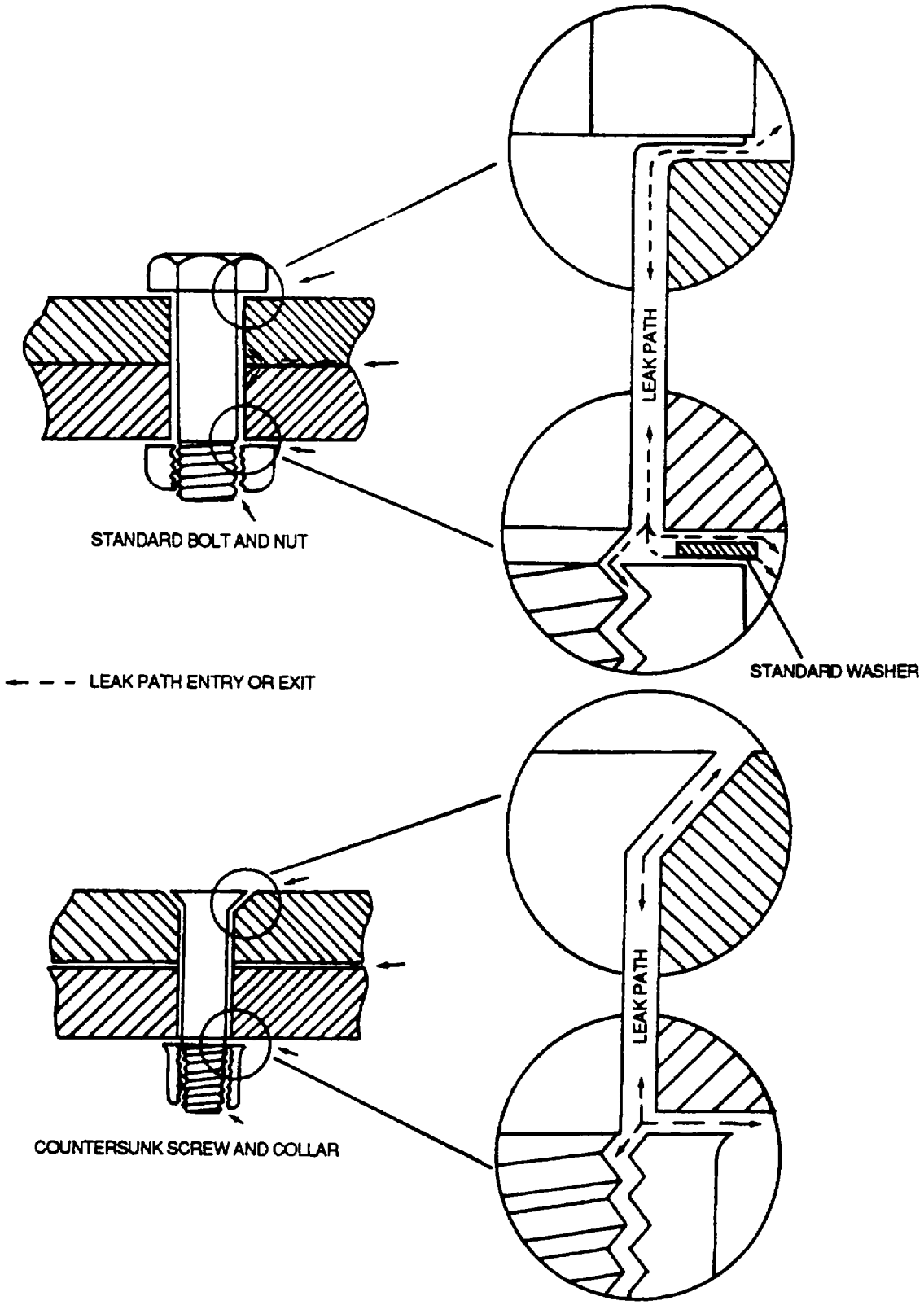

Figure 2-9. Fastener Leaks

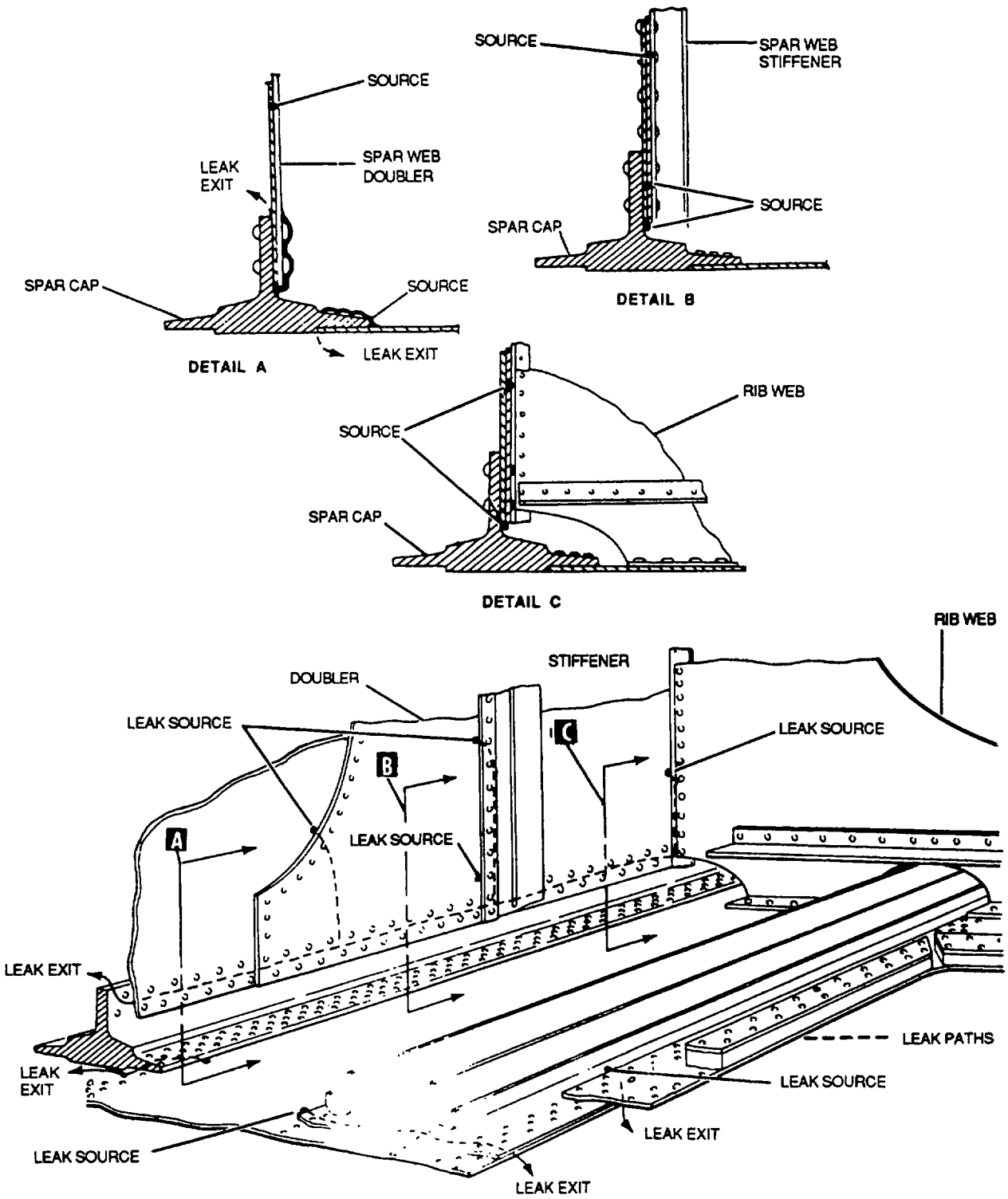

Figure 2-10. Long Leak Path Examples

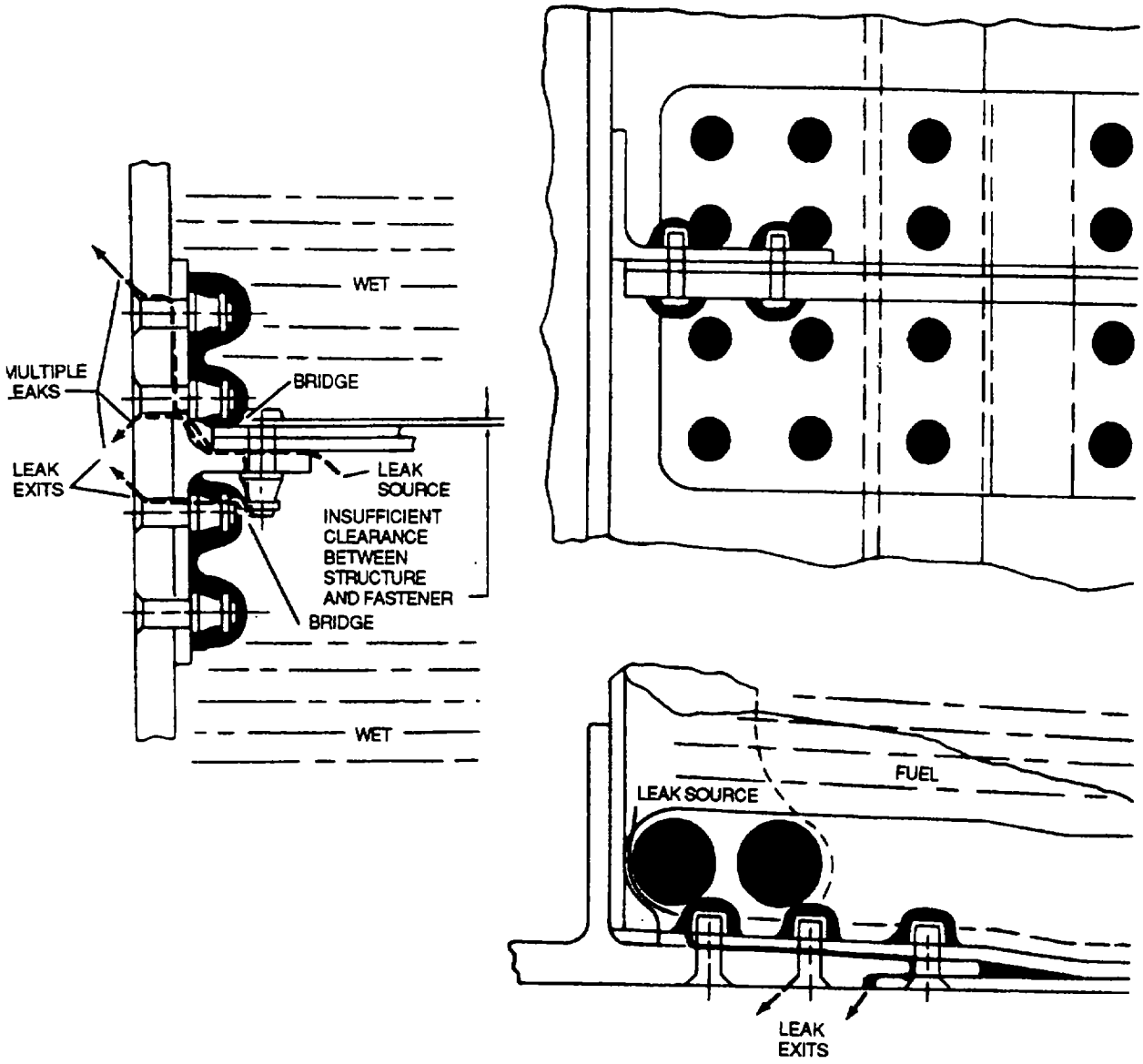

Figure 2-11. Multiple Leak Paths (Single Leak Source)

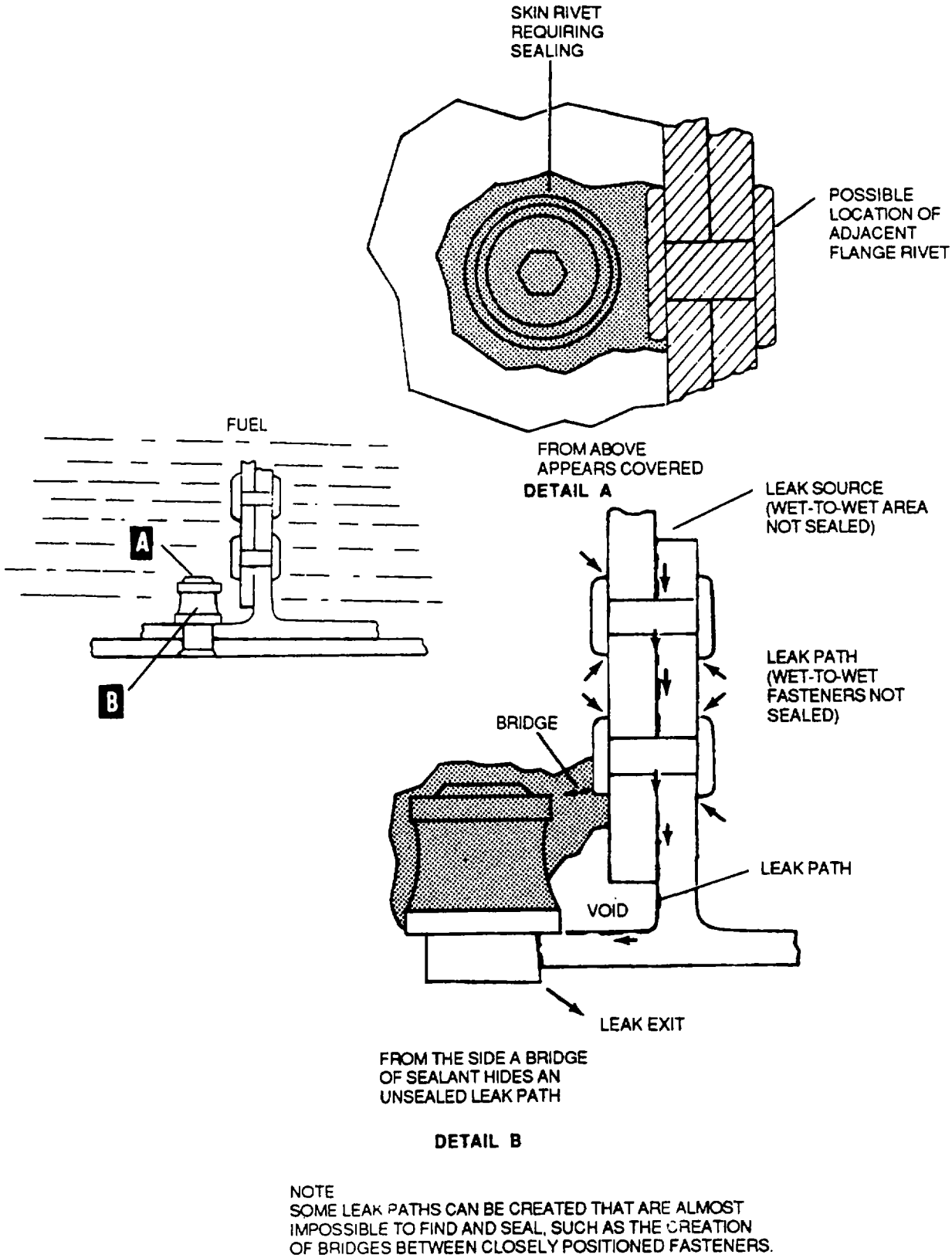

NOTE
SOME LEAK PATHS CAN BE CREATED THAT ARE ALMOST IMPOSSIBLE TO FIND AND SEAL, SUCH AS THE CREATION OF BRIDGES BETWEEN CLOSELY POSITIONED FASTENERS.

Figure 2-12. Sealant Bridging

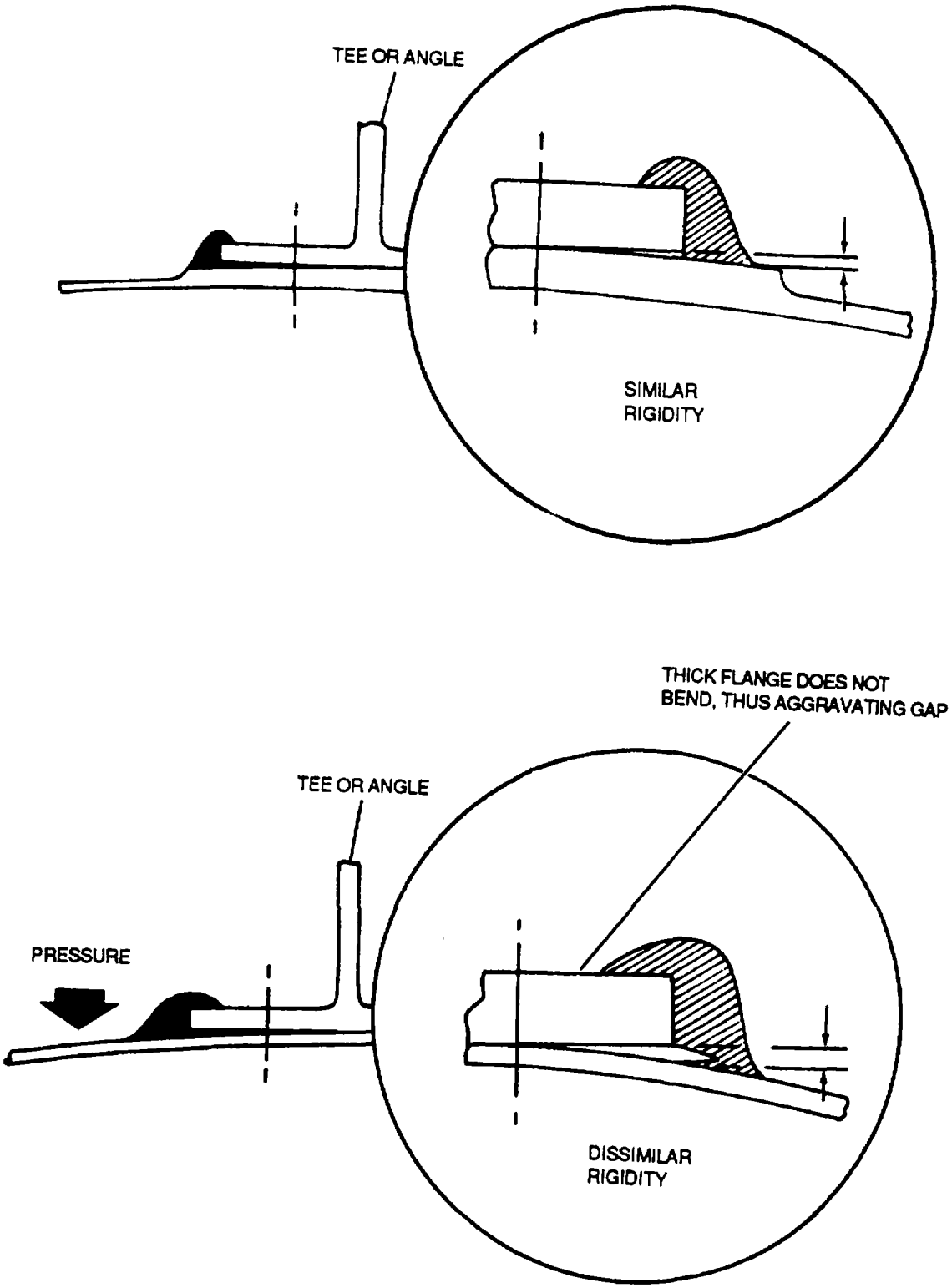

Figure 2-13. Fillet Seal Deflection

Table 2-7. Mixing Ratios

Liquid dye	NSN	Unit of issue	MIL-SPEC	Mixing ratio
		Static Fuel System Tests		
Red	6820-00-926-8887	2 ounces	MIL-D-81298	Add 2 ounces to each 100 gallons of fuel.
Red	6820-00-001-4192	1 gallon	MIL-D-81298	
Yellow	6820-00-412-2296	1 gallon	MIL-D-81298	
		Runup and In-flight Fuel System Tests		
Yellow	6820-00-412-2296	1 gallon	MIL-D-81298	Add 1.6 ounces to each 100 gallons of fuel.

(c) Mixing in servicing vehicle. The dye can be blended in a refueling vehicle that has been reserved for servicing dyed fuel. The required quantity of dye should be determined before starting. To ensure proper mixing of dye in fuel, partially fill the trailer to about 10 percent and then add the appropriate amount of dye slowly to the contents of the trailer while the trailer is filled with remaining fuel.

(d) Static leak detection in fuel cells. Use a diagram of the leaking fuel cell which slows all connections.

1 Transfer the fuel into another cell or defuel as necessary. Pour the liquid dye into the leaking cell and fill to the 1/3 level with JP-4 fuel. Allow the dye solution to set in the cell for approximately 6 hours or until the dye solution comes through the drain. Should the dye appear, there is a leak within this level.

NOTE

One third level is determined from the known capacity of the cell; for example, 100 gallons added to a 300 gallon cell.

2 Repeat the procedure at the 2/3 level and full level, as necessary. A full cell should be allowed to set for approximately 12 hours.

3 When a leak is detected, connections should be checked, the cell defueled, and residual fuel removed with cloths and drained from the sump. Type MA-1 explosion proof blower may be used to remove fumes. Remove all connections, pull fuel cell down, and check for dye stains on exterior of the cell. These stains are easily detected, thus pinpointing the leak. Rarely is any maintenance necessary other than replacing seals and retorquing connections.

4 Check for defective cells (blisters, layer separations, etc.) in accordance with the applicable fuel cell and/or aircraft maintenance manual.

5 After closing the fuel cell, the dye solution may be transferred into the fuel cell once more to the three levels: 1/3, 2/3, and full, thereby ascertaining whether or not the cell still leaks.

6 After completion of fuel cell leak detection operation, the aircraft may be flown with yellow dyed fuel. Red dyed fuel can be used provided it is diluted 10 parts to 1 part with undyed fuel in the fuel cell or cells. If dilution is not possible, the aircraft will be defueled of dyed fuel which will be stored in a bulk storage tank.

(e) Static leak detection for fuel system including lines and engines. Leakage checks of airframe mounted lines and connectors, and of integral wing and auxiliary fuel tanks may be undertaken using any of the dyes authorized herein. However, when red dye is used the engine shall not be operated, and the aircraft shall be defueled of the dye fuel following testing. Residual yellow dyed fuel need not be removed.

(f) Static-leak detection in airframe lines and fuel cells. If only the airframe mounted fuel lines and connectors, or integral wing and auxiliary fuel cells are to be tested, allow the dyed fuel to stand in the aircraft 6 to 8 hours before performing leakage testing.

1 Examine all accessible fuel cell interconnects, fuel cell access covers, drains, boost pump mounting points, and fuel line connections. Follow periodic instructions given in applicable aircraft maintenance technical manuals.

2 If the aircraft has not had an engine run-up, operate fuel boost pumps keeping main fuel shutoff valve closed. Check for leaks in the lines upstream of the main fuel shutoff valve.

(g) Leak detection for engine runup. If engine runup or test flight is programmed, the leakage test may be conducted any time after the aircraft has been fueled. Only yellow dyed fuel may be used for engine runup testing on the ground, after an engine change, or for test flights after a periodic or phased inspection. The dyed fuel is particularly useful in checking for leakage near the engine hot section area, where high temperatures prevent leaking fuel from leaving a wet spot. When the dyed fuel evaporates from a surface, the dye remains as a deposited residue.

1 Perform engine runup or test flight in accordance with applicable directives.

2 Upon completion, carefully examine main fuel line shutoff valve connections and all other connectors downstream from it. Any dye deposit indicates leakage.

WARNING

Dry-cleaning solvent is flammable and solvent vapors are toxic. Use P-D-680, Type II Solvent in a well-ventilated area. Keep away from open flames. Avoid prolonged solvent contact with skin.

3 When a leak has been repaired, remove the dye stain with the aircraft fuel or dry-cleaning solvent conforming to P-D-680, Type II, and repeat the applicable test. Recheck repaired areas to verify leakage has been stopped.

(h) Disposition of dyed fuel. JP-4 fuel dyed with yellow dye may be left in the fuel system, following leak detection operations and used in normal operations.

1 Yellow dyed fuel which must be removed from the fuel system may be placed in bulk storage and used without dilution or mixed with other dyed fuel which has been diluted.

2 JP-4 fuel dyed with red dye liquid will be diluted in the aircraft 10 to 1 with undyed fuel and used in normal operations or removed from the aircraft and placed in bulk storage where it is diluted 10 to 1 with undyed fuel. This fuel may then be issued to base assigned aircraft for normal use.

3 The bulk tank in which the dyed fuel is stored or mixed with standard fuel will be marked with signs 4 x 12 inches, black letters on white background, which will be prepared using wood or similar material. The signs will read: THIS TANK CONTAINS LEAK DETECTION DYED FUEL. These signs will be temporarily attached to the receiving and issuing valves. When all of the dyed fuel has been issued, the signs will be removed. This should be accomplished in order to avoid confusion with colored gasoline.

4 Any excess liquid stain on aircraft, fuel cell, or storage equipment may be removed by wiping with a cloth. The dye will lose color over a short period of time; therefore, it is not necessary to take special measures to remove all stains.

(i) Servicing procedures to transient aircraft. Dyed fuel stored in bulk storage facilities will be serviced to locally assigned aircraft. It will not be serviced to transient aircraft. The presence of dyed fuel in transient aircraft could be falsely construed by air crews and maintenance personnel as contaminated fuel. If emergencies arise requiring servicing of dyed fuel to transient aircraft, the crew will be advised and note made on aircraft form that aircraft was serviced with dyed fuel.

(2) Approved testing fluids. The following approved calibrating fluids and their uses are listed as follows:

CAUTION

Equipment calibrated with MIL-C-7024 Type I will not be operated using other fluids. Incorrect calibration may result.

- MIL-C-7024, Type I is used to test switches on aircraft using AVGAS.
- MIL-C-7024A, Type I is used to test fuel system components for reciprocating engines.
- MIL-C-7024, Type II is used to test switches on aircraft using jet fuel.

NOTE

- **MIL-C-7024 fluid, Type I will not be used to calibrate jet engine fuel system accessories. Jet engine fuel systems will use MIL-C-7024 Type II fluid.**
- **Accessories will be thoroughly flushed with cleaning solvent, P-D-680, after calibration and preserved with light oil, MIL-C-6529.**

h. Aeroquip Corporation Series 3700 and 3750 Quick Thread Couplings. The advantages of quick-disconnect couplings include ease and speed when connecting and disconnecting fuel systems. They also help to eliminate gas loss and other hazards caused by exposed fuel.

(1) Types. The more common types of quick-disconnect couplings are described in the following paragraphs.

(a) Screw-type. This type, as shown in figure 2-14, is connected by rotating the union nut until teeth fully engage the teeth of the lock spring. A distinct clicking noise is heard as the teeth engage.

(b) Quick-threading/indicating-type. This type, as shown in figure 2-15, is connected by twisting the socket In a clockwise direction onto the threaded nipple portion.

(c) Inst-o-matic push/pull-type. This type, as shown in figure 2-16, is connected by pulling back the spring-loaded outer shell of the socket, and while in this condition, by pushing socket firmly onto the nipple and releasing the socket shell.

(d) Full grip push/pull-type. This type, as shown in figure 2-17, is connected by pushing the mating halves together.

(*e) Straight flow ball valve-type*. This type, as shown in figure 2-18, is connected by mating the socket to the nipple portion and then turning the socket in a clockwise direction.

(f) Ball lock-type. This type, as shown in figure 2-19, is connected by pushing socket onto nipple assembly and rotating socket cam collar clockwise.

(2) Inspection of Aeroquip Corporation series 3700 and 3750 quick thread couplings. Quick-disconnect couplings can be inspected for excessive wear by measuring the length variation of the coupling assembly as follows:

(a) With system pressure at zero and the coupling connected, compress the coupling lengthwise and measure from the back of the nipple half adapter hex to the back of the socket half adapter hex.

(b) Record the measurement as value A.

(c) Extend the coupling by pulling lengthwise and repeat the measurement.

(d) Record this measurement as value B.

(e) Compare values A and B to determine amount of length variation.

(f) Refer to table 2-8. If length variation exceeds the given value for the particular dash size, early failure is indicated. Replace coupling assembly if this occurs.

(3) Maintenance. Proper care and handling of quick-disconnect couplings must be exercised to prolong coupling life and ensure the integrity of the system in which they are employed.

(a) Tools. Do not use gripping tools to connect or disconnect coupling halves as these actions can normally be readily accomplished by hand.

(b) Use. Couplings of the types listed have undergone extensive engineering prior to production. All have been subjected to extensive vibrational and other testing. They will perform satisfactorily and will not separate during use if they have been properly connected and are otherwise in serviceable condition.

(c) Care. Avoid dirt or other foreign matter contamination when couplings are in the disconnected condition. Contamination can inflict coupling damage and will, when coupling halves are connected, cause system contamination. Should contamination occur, wipe with a clean, dry lint-free cloth or use a clean brush. If a brush is used, assure no bristles remain in the coupling connecting areas after brushing.

(d) Handling. Handle quick-disconnects as you would any other fine piece of equipment. Although they are not delicately designed, do not abuse them by dropping or inflicting other types of abuse.

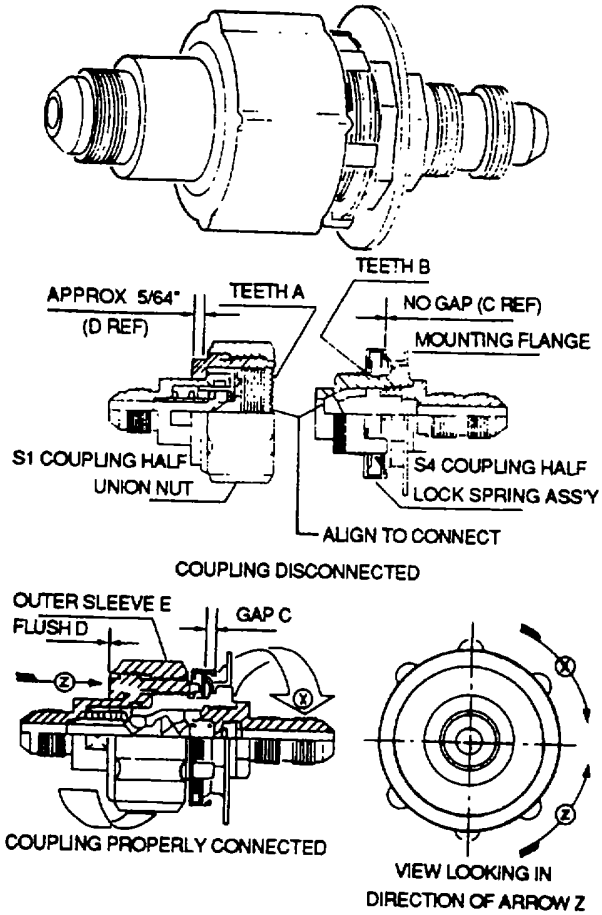

TORQUE VALUES TO PROPERLY CONNECT

SIZE	TORQUE
4 and 5	10 ft lbs
6 and 8	15 ft lbs
10 and 12	20 ft lbs
16, 20 and 24	30 ft lbs

Figure 2-14. Screw-Type Coupling

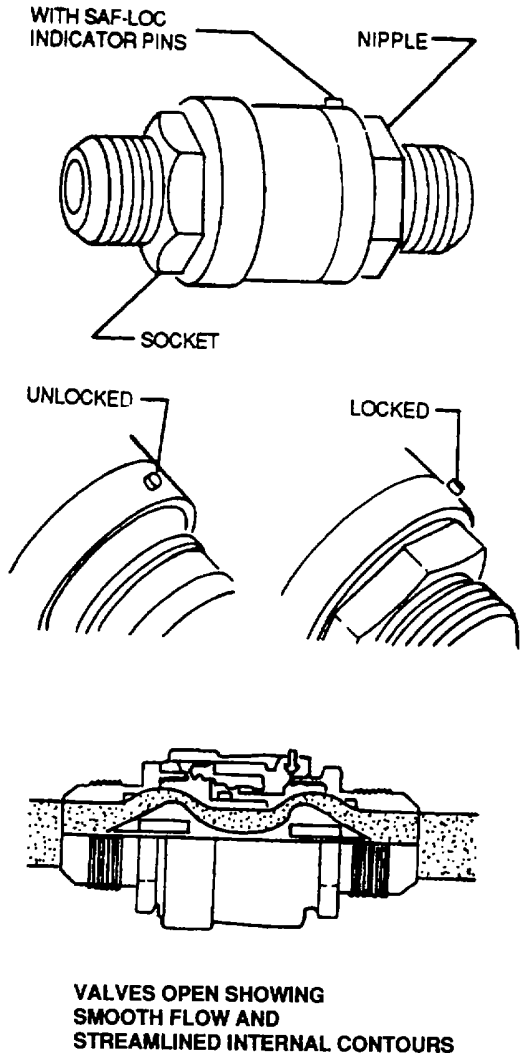

Figure 2-15. Quick-Threading /Indicating

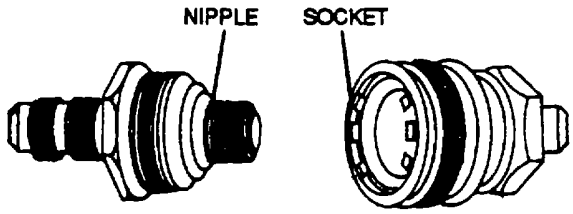

Figure 2-16. Inst-O-Matic Push / Pull-Type

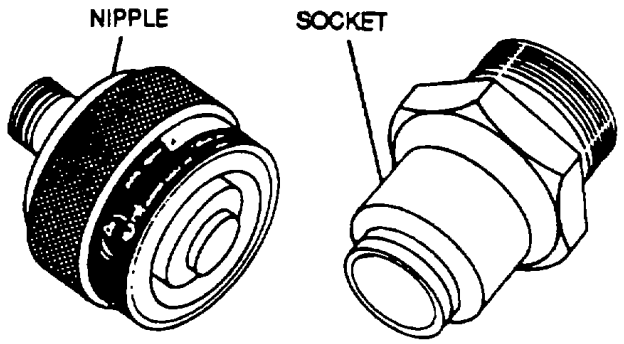

Figure 2-17. Full Grip Push/Pull-Type Coupling

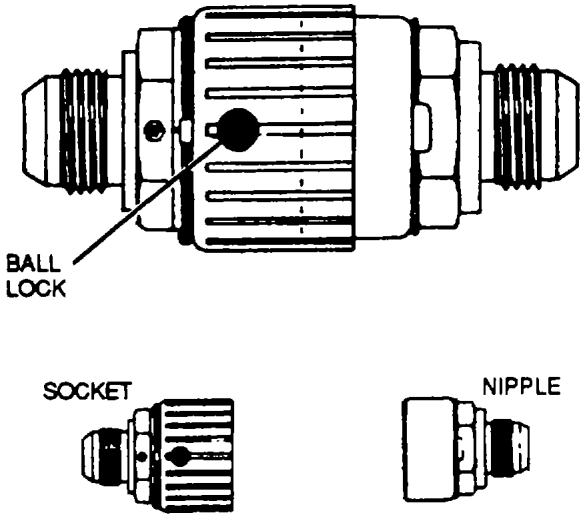

Figure 2-18. Straight Flow Ball / Valve-Type Coupling

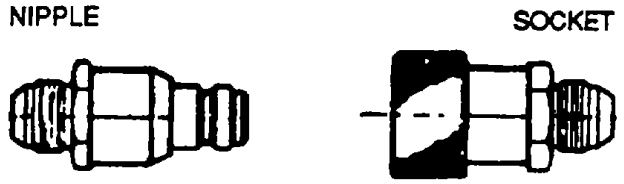

Figure 2-19. Ball Lock-Type Coupling

i. *Closed-Circuit Refueling Receptacles*. Closed-Circuit Refueling (CCR) is a system of equipment in which a special aircraft fill port (receiver) and a special nozzle mate to form a vapor-proof seal. This system prevents vapors from escaping at the aircraft fill port, and so reduces the danger of ignition from static electricity or engine heat. Use of closed-circuit equipment is especially ,desirable when aircraft are being serviced by the riot refueling method. Hot refueling is used to reduce the ground time needed to refuel aircraft, particularly helicopters used in support of combat operations. Closed -circuit refueling prevents spills, prevents fuel vapors from escaping at the aircraft fill port, and prevents dirt, water or, and other contaminants from entering the aircraft fuel supply during refueling. These factors contribute to safe ground operations by reducing fire hazards and contribute to safe flight operations by protecting the quality of the fuel used.

(1) Types. Any closed system of aircraft refueling depends on two basic pieces of equipment: a receiver that is mounted in the aircraft, and a nozzle. These two pieces of equipment are designed for each other, to mate or lock together before fuel can flow through them. The Army has two such equipment systems, the CCR system that: is part of the Forward Area Refueling Equipment (FAIRE) system and the D-1 pressure system (also called the centerpoint system).

(2) Inspection. The CC:R receiver as shown in figure 2-20 is inspected as follows:

(a) Check receiver structural support assembly for damage, corrosion, and galling of flanges and webs.

(b) Check retainer four condition, cracks, or scoring of grooved breakaway tabs. Replace a retainer if damaged.

(c) Check receiver for condition and corrosion, floats for freedom, and fuel nozzle receptacle for scoring or damage.

(3) Maintenance. Maintenance of the] CCR receiver consists of inspection (and replacement if necessary) in accordance with the applicable maintenance manuals. Scoring and nicks iin the cylindrical fuel nozzle opening may be repaired by polishing out damage. Refer to the applicable maintenance manual for polishing procedures.

j. *Fuel System Troubleshooting*. Troubleshooting should be accomplished in accordance with applicable aircraft maintenance manuals. A typical troubleshooting chart and a schematic are shown in table 2-9 and figure 2-21.

Table 2-8. Quick-Disconnect Coupling Inspection Values

Coupling dash size	Maximum allowable length variation
-4	0.050
-6	0.050
-8	0.050
-10	0.068
-12	0.068
-16	0.081
-20	0.099
-24	0.099

2-6. Handling and Storage of Fuels. Receipt, storage, and marking practices are described in the following paragraphs. Safety precautions are listed in table 2-10.

a. Receipt. Upon receiving packaged items at the class III supply point, inspect the containers for damage or leaks, improper or illegible markings, or any other evidence of incorrect packaging. When any damaged containers are found, issue the fuel or pour it into another undamaged container Immediately. Don't send them back to the supplier. If the contents of a container can be positively identified but its markings are not clear, set the container aside and remark it. If the contents cannot be identified, take a sample and submit it to the petroleum laboratory. Copy on the sample tag, as shown in figure 2-22, all legible markings on the container. Before receiving large quantities of packaged items, advance copies of orders on documents at the class III supply point will be received. This helps plan for the receipt of the items. Use DD Form 1348-1 to verify the receipt of packaged products at the supply point. Follow the tally-in steps in AR 725-50 when using DD Form 1348-1.

b. Storage Practices. Rotate the stock and issue the o;Ild3st product first. Follow the first-in, first-out rule. Use, stock cards to identify dates of pack and issue priority. Keep a running inventory of all products on hand at the storage area and all issued. Keep complete rf3corcjs of all products that enter and leave the area. Store packaged petroleum products and fuels in sections by product date and batch number. Store under cover on dunnage or pallets if possible. Protect with tarpaulin's or waterproof coverings. Don't store them in a building unless the building has adequate dispersion and ventilation. Always store empty, used fuel containers outdoors. If there are empty containers that are; near or reconditioned, store them indoors whenever possible. Collect all petroleum waste products in 55-gallon drums and store them away from other stocks. Issue the oldest batch first unless laboratory analysis indicates that an earlier issue is necessary.

NOTE

- **Lubricating greases are usually packaged in drums, cylindrical cans, or pails.**
- **Packaged fuels usually come in 5-gallon cans, 55-gallon drums, and 500-gallon collapsible drums.**

c. Marking. Cans and drums need to be marked for quick identification of contents. The markings used at class III supply points should be standardized by nomenclature and location.

(1) Marking containers in the field. Use the following procedures to mark cans and drums at class III supply points.

(a) Standard markings. The markings used on cans and drums are explained in the following paragraphs.

1 Nomenclature. Mark each container with either a standard nomenclature or a short nomenclature identification. The short nomenclatures authorized for field use are listed below.

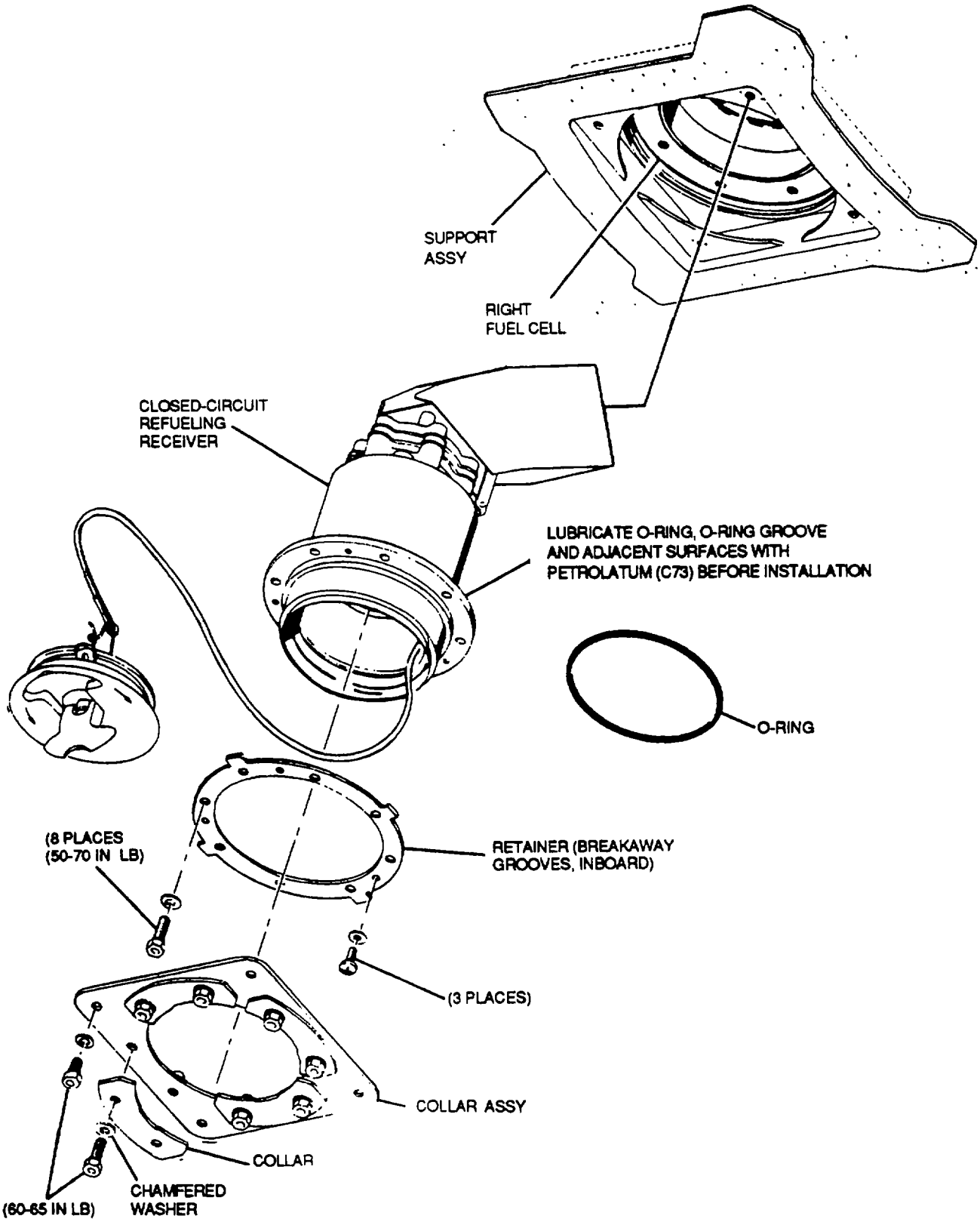

Figure 2-20. Closed-Circuit Fuel Receiver Installation

Table 2-9. Typical Fuel System Troubleshooting Chart

Trouble or symptom	Isolation procedures	Corrective action
1. No fuel pressure indication.	a. Use a multimeter to check for defective fuel pressure transmitter.	Replace transmitter if defective.
	b. Use a multimeter to check for defective fuel boost pump.	Replace pump if defective.
	c. Use a multimeter to check for defective fuel pressure indicator.	Replace indicator if defective.
2. No fuel flow indication.	a. Use a multimeter to check for defective fuel flow transmitter.	Replace transmitter if defective.
	b. Use a multimeter to check for defective fuel boost pump.	Replace pump if defective.
	c. Use a multimeter to check for defective fuel flow indicator.	Replace indicator if defective.
3. RH or LH NO FUEL TRANSFER indicator illuminates continuously.	a. Use a multimeter to check for defective fuel transfer pump.	Replace pump if defective.
	b. Use a multimeter to check for defective fuel transfer pump pressure switch.	Replace pressure switch if defective.
4. Fuel quantity indicator gives incorrect indication.	a. Use a multimeter to check for insufficient voltage at fuel transmitter.	Check voltage at fuel tank transmitter to ensure 28 VDC is at transmitter. (Battery power will not always give sufficient voltage for correct indication.)
	b. Use a multimeter to check for defective fuel quantity transmitter.	Replace transmitter if defective.
	c. Use a multimeter to check for defective fuel quantity indicator.	Replace indicator if defective.

Table 2-9. Typical Fuel System Troubleshooting Chart - CONT

Trouble or symptom	Isolation procedures	Corrective action
4. Fuel quantity indicator gives incorrect indication. (Continued)	d. Use a multimeter to check defective or out of adjustment fuel calibration potentiometer.	Replace or adjust potentiometer.
	e. Visually check for loose or corroded connections.	Cleanand tighten connections.
5. High resistance at pin No. 28 or pin No. 35 of the fuel management Panel connector (aircraft side).	Visually check for loose or corroded connection of the transmitters.	Clean and tighten connections.
6. High resistance at one transmitter.	Use a multimeter to check for defective transmitter.	Replace transmitter if defective.
7. Open circuit (infinite resistance) at pin No. 28 or 35 of fuel management panel connector (aircraft side).	a. Use a multimeter to check for defective transmitter.	Replace transmitter if defective.
	b. Use a multimeter to check broken bonding strap.	Replace strap if defective.
	c. Use a multimeter to check for defective wiring.	Repair or replace wiring.
8. Visual evidence of leaking fuel.	a. Visually check for defective fuel cell.	Repair or replace cell.
	b. Visually check for broken or cracked fuel line or hose.	Repair or replace line or hose.
9. Fuel continues to flow with firewall shutoff Valve in closed position.	Use a multimeter to check for defective firewall shutoff valve.	Replace valve if defective.
10. Fuel will not crossfeed.	Use a multimeter to check for defective fuel crossfeed valve.	Replace valve if defective.

MOGAS	Automotive gasoline
AVGAS	Aviation gasoline
JP	Turbine fuel
OF	Diesel fuel

2 *NATO code number*. Mark each container with a NATO code number, as needed. See the latest MIL-STD-290 for a list of NATO code numbers.

3 *Filling date*. Mark on each container the day, month, and year you filled it.

4 *Weight or volume of contents.* Mark each container with the weight or volume of the contents, as needed.

5 *Safety markings*. Mark containers that are to be transported by military aircraft according to TM 38-250. Mark 500-gallon collapsible drums with the word FLAMMABLE to make sure this petroleum drum is not used for water.

(b) *Location and size*. The following paragraphs describe where to place the markings and their size.

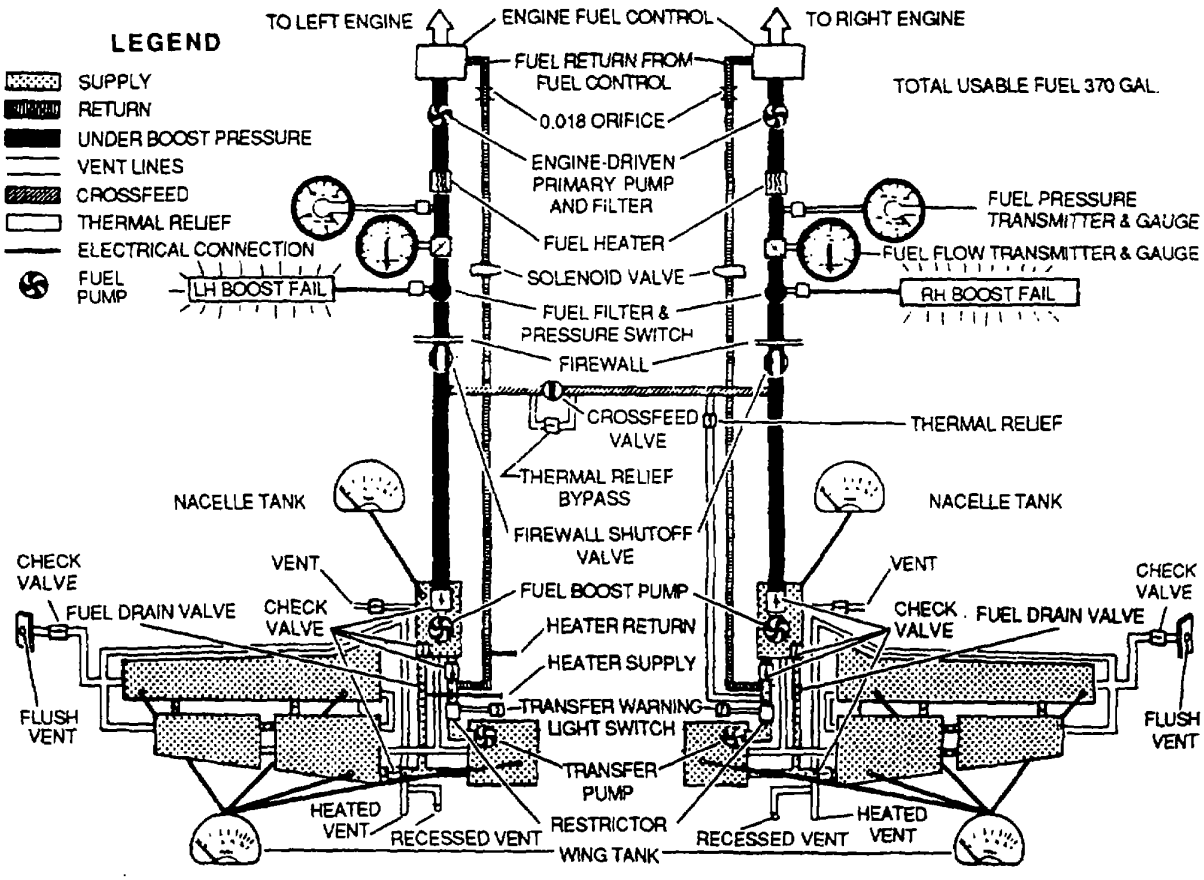

Figure 2-21. Typical Fuel System Schematic

Table 2-10. Safety Precautions

Rules	Remarks
No Smoking	Don't let anyone smoke in the class III supply point.
Post NO SMOKING WITHIN 50 FEET signs where they can be seen	Personnel must know that they are in a hazardous area.
No matches or cigarette lighters	Don't let anyone bring matches or lighters in the class III supply point.
Don't handle product during electrical storms	Stop loading or unloading flammable products during an electrical storm or when there is a threat of one.-.
Dispose of waste safely	Use only self-closing metal containers for oil- or paint:-soaked waste or rags, and dispose of them each day.
Equipment must be explosion-proof	Install only explosion-proof electrical equipment: and fixtures in hazardous area.
Inspect grounding system	Inspect ground wires monthly. Test grounding system annually or when it suffers mechanical damage. Replace or repair faulty equipment.
Band and ground equipment	Bond and ground pumps, tank vehicles, and storage tanks.
Have fire extinguishers handy	Place fire extinguishers and other firefighting equipment within easy reach but where they will be safe from a fire.
Tend all nozzles constantly while refueling	Don't use nozzles with notched handles. If you must use notched-handle nozzles, make sure the notches are modified so that the nozzles must be held open by hand and attended at all times.
Try not to spill fuels	Clean up spills at once. Repair leaks at once. If needed, replace defective hoses, gaskets, and faucets.
Be aware of hazards of fuel vapors	Avoid, exposure to fuel vapors for long periods. Make sure work and storage areas are well ventilated.
Always wear proper clothing	Wear gloves and protective clothing to keep fuels off the skin. Never wear nylon clothing when handling petroleum because high electrostatic charges build up in such fabric.

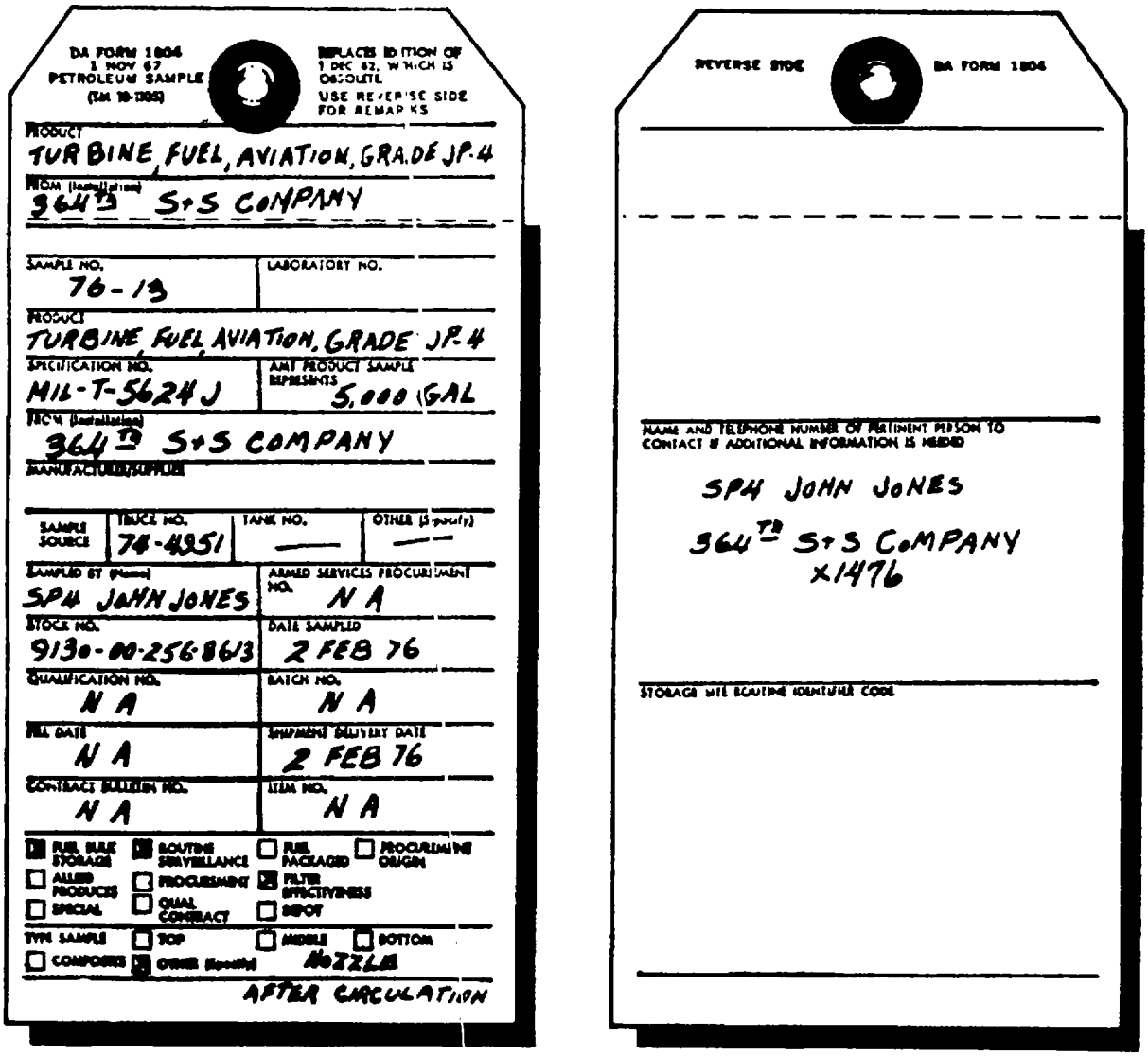

DA FORM 1804
1 NOV 67
PETROLEUM SAMPLE
(DA 10-1805)

REPLACES EDITION OF 1 DEC 62, WHICH IS OBSOLETE
USE REVERSE SIDE FOR REMARKS

PRODUCT: TURBINE, FUEL, AVIATION, GRADE JP-4

FROM (Installation): 364TD S+S COMPANY

SAMPLE NO.: 76-13

LABORATORY NO.:

PRODUCT: TURBINE, FUEL, AVIATION, GRADE JP-4

SPECIFICATION NO.: MIL-T-5624J

ANY PRODUCT SAMPLE REPRESENTS: 5,000 GAL

TO (Installation): 364TD S+S COMPANY

MANUFACTURER/SUPPLIER:

SAMPLE SOURCE: TRUCK NO. 74-4951 | TANK NO. — | OTHER (Specify) —

SAMPLED BY (Name): SP4 JOHN JONES

ARMED SERVICES PROCUREMENT NO.: N A

STOCK NO.: 9130-00-256-8613

DATE SAMPLED: 2 FEB 76

QUALIFICATION NO.: N A

BATCH NO.: N A

REL DATE: N A

SHIPMENT DELIVERY DATE: 2 FEB 76

CONTRACT BULLETIN NO.: N A

ITEM NO.: N A

[X] FUEL BULK STORAGE [X] ROUTINE SURVEILLANCE [ ] FUEL PACKAGED [ ] PROCUREMENT ORIGIN
[ ] ALLIED PRODUCTS [ ] PROCUREMENT [X] FILTER EFFECTIVENESS
[ ] SPECIAL [ ] QUAL CONTRACT [ ] DEPOT

TYPE SAMPLE: [ ] TOP [ ] MIDDLE [ ] BOTTOM
[ ] COMPOSITE [X] OTHER (Specify) NOZZLE

AFTER CIRCULATION

REVERSE SIDE — DA FORM 1804

NAME AND TELEPHONE NUMBER OF PERTINENT PERSON TO CONTACT IF ADDITIONAL INFORMATION IS NEEDED

SP4 JOHN JONES
364TD S+S COMPANY
X1476

STORAGE SITE ROUTING IDENTIFIER CODE

Figure 2-22. DA Form 1804 (Petroleum Sample)

1 5-gallon cans. All markings on 5-gallon cans should be in three-fourths inch letters. Place the marking on the can as shown in figure 2-23.

2 55-gallon drums. All markings on 55-gallon drums should be at least three-fourths of an inch. Mark the top head of the drum as shown in figure 2-23.

3 500-gallon collapsible drums. All markings on 500-gallon collapsible drums can vary between 1 to 5 inches. Mark both ends of the drum as shown in figure 2-23. Put the filling date on the drum when you're using it for temporary storage of petroleum fuels.

(*c) Method*. Mark containers by brushing or spraying yellow stencil paint over a sharply cut stencil. Other methods of marking may be used in an emergency; however, the markings must be legible and durable. Mark containers at the time they are filled. If previous markings are clear and correct, the container does not have to be remarked; just correct the filling date. Before the container is remarked, paint over old markings as specified in MIL-STD-290. Repaint markings that have been marred.

(2) Marking containers for waste products. Paint over the original markings on these drums with yellow paint and paint WASTE PRODUCT on the head of the drums. Then, mark each drum to indicate what product is in it. Wear safety shoes and neoprene gloves when handling empty drums and packaged products and fuels. In addition, the equipment used within or around the can and drum storage area must be equipped with flame and spark arresters.

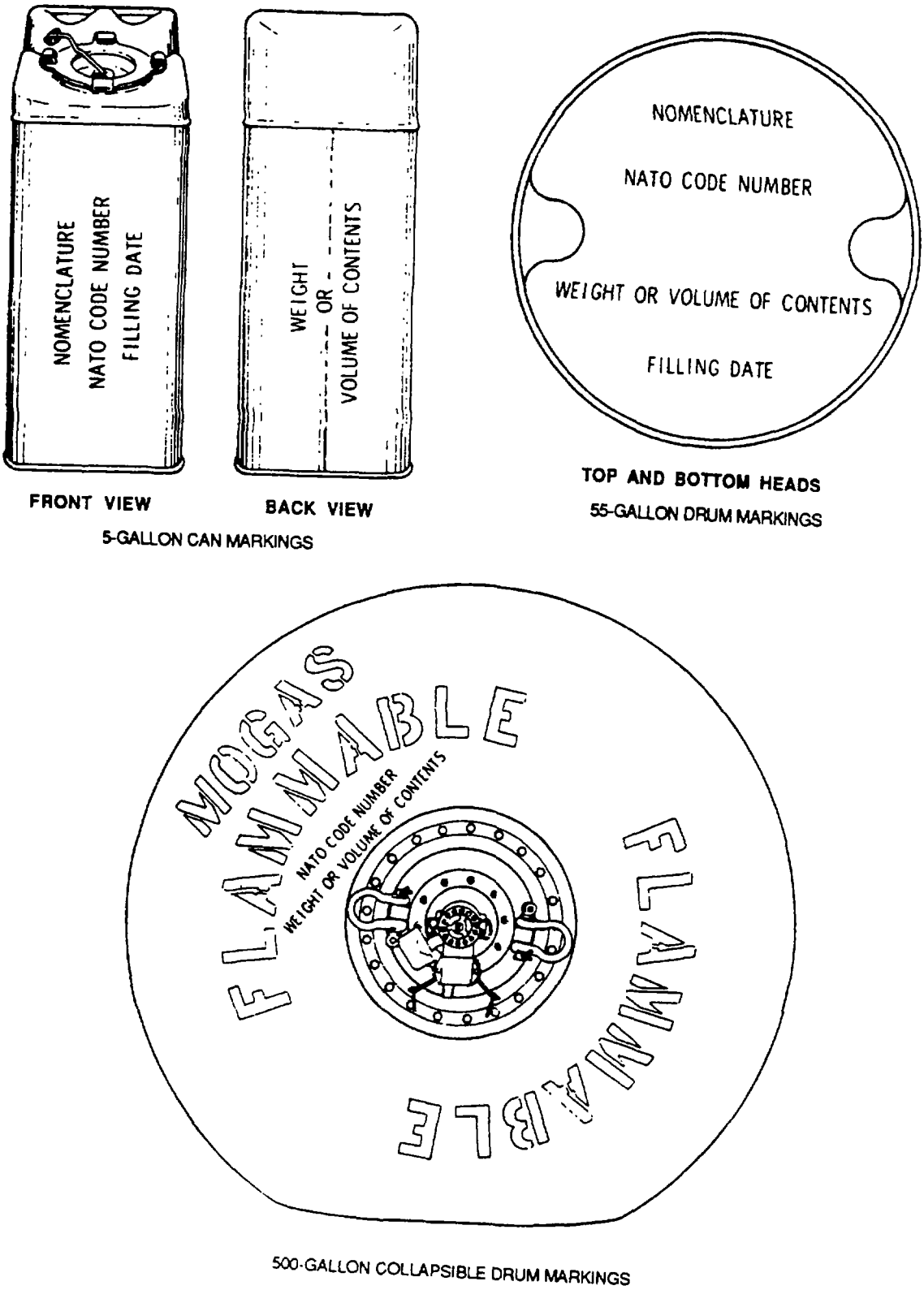

Figure 2-23. Can and Drum Marking

2-7. Fuel Cell Repair (Goodyear, Loral, Engineer Fabrics).

a. Fuel Cell Precautionary /Safe / Criteria. General Information.

WARNING

All regulations and instructions for handling fuels shall be strictly observed.

The following WARNINGS and CAUTIONS shall be observed before and during removal, cleaning, repair, and testing of fuel cells.

WARNING

To prevent asphyxiation from fuel, oil and alcohol fumes, you must wear protective clothing, i.e., an apron, an air supplied respirator, a face shield and rubber gloves. Use an air compressor to continuously pump air into the tank when personnel are in the tank. Ground the air hose to the tank. Assign a person to monitor the person in the tank in the event he is overcome by fumes.

WARNING

Use an explosometer to insure safe conditions in the fuel cell before starting work

WARNING

Acetone, barrier cement, repair adhesives and its components are flammable and toxic. They can irritate skin and cause bums. Use only with adequate ventilation and wear a NIOSH approved air-purifying respirator for organic vapors. Keep away from heat or open flame. Wear safety glasses, gloves and protective clothing to avoid contact with skin, eyes and clothes. If contact occurs, flush areas with water and get medical attention for eyes.

WARNING

Work only in approved areas with adequate ventilation and where emergency equipment can move freely. Initial deactivation must be done out-of-doors.

WARNING

Make sure fuel cell and all cleaning, repair, and test equipment are properly grounded.

WARNING

Do not enter cell unless another person is available as safety monitor.

WARNING

Do not enter fuel cell wearing shoes, or with tools in your pockets.

WARNING

Do not allow hot work lamps to contact fuel cell. Use only explosion proof light.

CAUTION

Be careful when handling fuel cell at temperatures below 20°F (-6.67°C) to prevent cracking molded sections.

CAUTION

Do not expose fuel cell to any source of strong light for a long period.

CAUTION

Do not puncture or scratch lining of fuel cell. If lining is broken, fuel penetrates and activates self-sealing layers. Activated layers swell and trap fuel. Activated green spongy material also contaminates fuel system. This makes it necessary to replace fuel cell and flush fuel system.

CAUTION

Protect fuel cell at all times from sharp objects and from extremes of temperature and humidity.

CAUTION

Crashworthy, self-sealing fuel cells shall not be folded and/or collapsed for periods of more than four (4) hours. Fuel cells must be supported when stored, shipped, and/or repaired.

CAUTION

Purge fuel cell prior to inspection and repair. Refer to paragraph 2-5f (4) purging procedure.

CAUTION

Preservation of a fuel cell shall be delayed until repair work is completed, unless it will be more than 30 days before repairs are started. This reduces the cleanup effort by repair personnel prior to making repairs. Refer to paragraph 2-5f (5) for preservation procedure.

b. *Fuel Cell Damage Classification and Repair Limits*. General Information.

WARNING

Remove fuel cell from aircraft, dean and purge before doing any repair.

(1) Classify fuel cell damage as follows: Minor damage. See table 2-5 for serviceable limits.

(2) Reparable damage is classified as follows:

(*a) Internal Blister Damage*. Blisters exceeding 1/4 inch diameter must be repaired. If the innerliner is damaged, missing, or blistered, trim away the loose material, dean, buff, dean and make an innerliner/barrier repair. If the inner fabric ply is damaged, then apply a fabric patch repair, and then make an innerliner/barrier repair.

(b) External Blister Damage. Blisters exceeding 1/4 inch diameter must be repaired. If only the outer coating is missing or blistered, trim away the loose material, dean, buff, dean and apply repair cement. If the outer fabric ply is damaged, then apply a fabric patch repair.

(c) Interior Loose Seam Damage. Refers to innerliner laps and associated gum strips. In addition, reinforcement ply seams. If gum strip is damaged or loose, remove loose material, dean, buff, dean and make an innerliner/barrier repair. Innerliner laps are generally 1 1/4 inches to 1 1/2 inches. For innerliner lap, looseness, if at least 1 inch of seal remains, cut off loose material and make an innerliner/barrier repair. If less than 1 inch of seal remains, do not trim innerliner ply, gum strip can be trimmed. Clean, buff, and dean the bonding surfaces, apply repair adhesive (item 1, table 2-11) and apply pressure until adhesive cures. Then make an innerliner/barrier repair, para 2-7e(1)(b).

(d) Exterior Loose Seam Damage. Refers to gum strips and reinforcement ply seams. If gum strip is damaged or loose, remove loose material, dean, buff, dean and apply repair adhesive (item 1, table 2-11). If the fabric reinforcement ply has looseness greater than 0.50 inch or is damaged, then a fabric repair patch must be used. Reinforcement plies may have 3 to 4 inches of lap as originally built and this must be maintained.

(e) Internal Cuts, Tears, Chafing, or Snag Damage. All internal cuts, tears, chafing, and snags must be repaired with an innerliner/barrier repair.

(f) External Cuts, Tears, Chafing, or Snag Damage. If the fabric ply is not damaged an adhesive repair is acceptable.

(g) Cuts, Tears, Snags and Holes. All cuts, tears, snags and holes (not including holes which penetrate the entire cell wall) without sealant activation, penetrating one or more plies require an internal or external reinforced cover patch, depending on side of hole. Repair is limited to damages not exceeding a length or diameter of 4 inches after trimming. Remove loose material and ragged edges.

(h) Loose Fitting Flange Damage (Internal and External). Trim away up to 1/8 inch of radial looseness. If radial looseness is greater than 1/8 inch; dean, buff and clean contact surfaces. Apply repair adhesive to both surfaces and bond together. Use Repair Fuel Cell Outer Coating procedure, except buff only contact surfaces and do not trim away loose material if loosenss is greater than 1/8 inch.

(i) Replacement of Fitting Thread Inserts (Helicoils). (TM 1-1500-204-23-6).

(j) Fitting Damage/Finish. Fittings which have inter-crystalline corrosion or scratches, outside of the critical sealing surface, to a depth of .030 inch can be reworked.

(k) Repair/Replacement of Internal and External Support Fittings. Loose or separated support fittings can be cleaned, buffed, cleaned again and cemented back in place.

(3) Damage that is not reparable is classified as follows:

(a) Damage which extends into a comer. step off area. or involves a cut longer than 4 inches is not reparable.

(b) Damage which has led to activation of the sealant ply/plies is not reparable.

(c) Damage to cells which cannot be repaired by cement or reinforced patching is not reparable.

(d) Hole damage which penetrates the entire cell wall is not-reparable.

c. Repair Fuel Cell Outer Coating, Interior/Exterior Loose Fitting Flange and Interior Loose Seam Damage.

WARNING

Acetone, barrier cement, repair adhesives and its components are flammable and toxic. They can irritate skin and cause bums. Use only with adequate ventilation and wear a NIOSH approved air-purifying respirator for organic vapors. Keep away from heat or open flame. Wear safety glasses, gloves and protective clothing to avoid contact with skin, eyes and clothes. If contact occurs, flush areas with water and get medical attention for eyes.

Repair blisters, cuts, tears, snags and abrasions that damage but do not penetrate the outer reinforcement plies (no fabric damage) as follows:

(1) Use knife and trim away loose, damaged or blistered outer coating (figure 2-24), except for loose fitting flange repair.

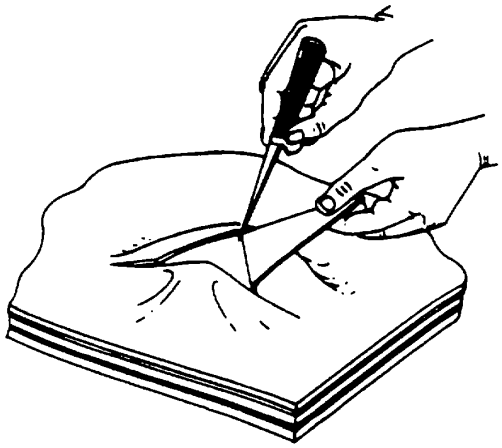

Figure 2-24. Removing Outer Coating

(2) Clean damaged area using a dean cloth (item 16, table 2-11) dampened with acetone (item 3, table 2-11). Wear gloves (item 4, table 2-11).

WARNING

Ensure all drills are non-sparking.

(3) Buff surface around damage 314 inch larger in all directions than damaged area (1, figure 2-25). Use portable drill (2), abrasive arbor, and/or scotch-brite. Buff only to remove gloss without excessively reducing outer coating thickness.

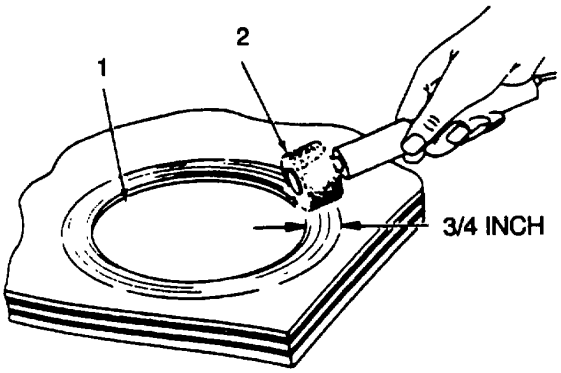

Figure 2-25. Buffing Damaged Area

(4) Cleaned buffed area. Use a dean cloth (item 16, table 2-11) dampened with acetone (item 3, table 2-11). Wear gloves (item 4, table 2-11).

NOTE

Mix adhesive in accordance with manufacturer's instructions, except do not mix full quantity of Parts 2 and 3 with Part 1. The full contents of Parts 2 and 3 can be mixed together and then used as necessary (mixed shelf life is 6 months). When mixing Parts 2 and 3 with Part 1, mix only quantity needed to perform repair. Mixing ratio is 58.24% of Parts 2 and 3 (mixed together) to 41.76% of Part 1.

(5) Prepare repair adhesive (item 1, table 2-11) by blending the ingredients of Part 2 and 3 together first and then transfer the mixture of Part 2 and 3 into the can of Part 1. Wear gloves (item 4, table 2-11).

CAUTION

Unmixed adhesive will not cure.

(6) Stir adhesive mixture with tongue depressor (item 5, table 2-11) for approximately 5 minutes. Make certain components are completely blended together.

(7) When performing loose fitting flange and interior loose seam damage repairs dean, buff, dean and cement loose flange contact surfaces and apply pressure with masking tape for at least a minimum of 12 hours. Remove masking tape and clean area with acetone, using clean cloth (item 16, table 2-11). Wear gloves (item 4, table 2-11).

(8) Carefully apply a thin uniform coat of adhesive mixture (1, figure 2-26) over buffed area (2) to no more than 1/4 inch of O.D. of buffed area. Use a brush (item 6, table 2-11). Smooth surface with gloved fingers wet with acetone (item 3, table 2-11). Remove any excess adhesive from unbuffed area. Use clean cloth (item 16, table 2-11) dampened with acetone (item 3, table 2-11). Wear gloves (item 4, table 2-11).

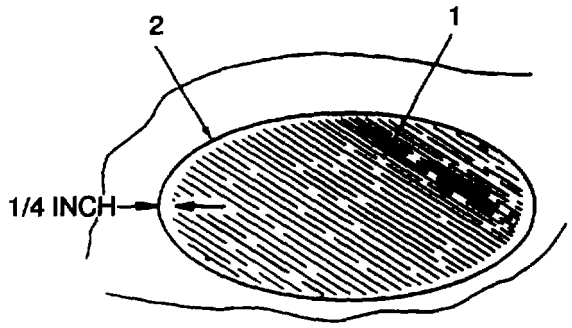

Figure 2-26. Applying Adhesive Mixture Over Buffed Area

CAUTION

Do not flex fuel cell in repair area.

(9) Allow finished repair to set for 1 hour before moving fuel cell.

(10) Allow finished repair to air cure for 24 hour at room temperature of 70°F (33°C) minimum before use.

(11) Visually inspect repair for workmanship, no loose edges, no voids and adhesive fully cured.

d. *Repair Fuel Cell Exterior Plies.*

WARNING

Acetone, barrier cement, repair adhesives and its components are flammable and toxic. They **can irritate skin and cause bums. Use only with adequate ventilation and wear a NIOSH approved air-purifying respirator for organic vapors. Keep away from heat or open flame. Wear safety glasses, gloves and protective clothing to avoid contact with skin, eyes and clothes. If contact occurs, flush areas with water and get medical attention for eyes.**

(1) Repair hole damage, cuts, tears and snags that penetrate outer coating and one or more exterior plies.

(a) Use knife and trim away loose, damaged or blistered outer coating edges (figure 2-24).

(b) Clean damaged area using a dean cloth (item 16, table 2-11) dampened with acetone (item 3, table 2-11). Wear gloves (item 4, table 2-11).

WARNING
Ensure all drills are non-sparking.

(c) Buff surface around damage 2 1/4 inches larger in all directions than damaged area (1, figure 2-27). Use portable drill (2), abrasive arbor, and/or scotch-brite. Buff only to remove gloss without excessively reducing outer coating thickness.

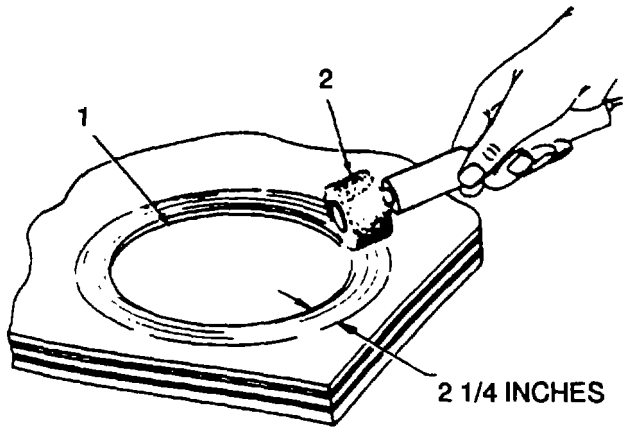

Figure 2-27. Buffing Surface 2 1/4 Inches Larger In all Directions

(d) Clean buffed area. Use clean cloth (item 16, table 2-11) dampened with acetone (item 3, table 2-11). Wear gloves (item 4, table 2-11).

(e) Cut fabric reinforcing patch (1, figure 2-28) from nylon fabric (item 7, table 2-11) large enough to overlap damaged area (2), 2 inches in all directions.

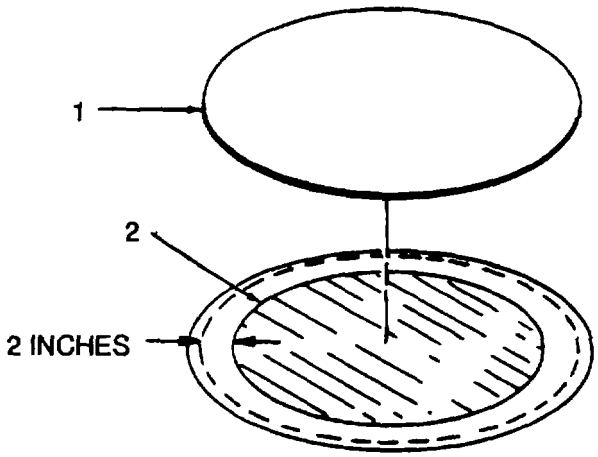

Figure 2-28. Fabric Cutting, Overlap Damaged Area

NOTE
Mix adhesive in accordance with manufacturer's instructions, except do not mix full quantity of Parts 2 and 3 with Part 1. The full contents of Parts 2 and 3 can be mixed together and then used as necessary (mixed shelf life is 6 months). When mixing Parts 2 and 3 with Part 1, mix only quantity needed to perform repair. Mixing ratio is 58.24% of Parts 2 and 3 (mixed together) to 41.76% of Part i.

(f) Prepare repair adhesive (item 1, table 2-11) by blending the ingredients of Part 2 and 3 together first and then transfer the mixture of Part 2 and 3 into the can of Part 1. Wear gloves (item 4, table 2-11).

CAUTION
Unmixed adhesive will not cure.

(g) Stir cement mixture with tongue depressor (item 5, table 2-11) for approximately 5 minutes. Make certain components are completely blended together.

(h) Carefully apply a uniform (liberal/heavy) coat of repair adhesive (1, figure 2-26) to no more than 1/4 inch of O.D. of buffed area (2). Use a brush (item 6, table 2-11). Smooth surface with gloved fingers wet with acetone (item 3, table 2-11) and remove any excess adhesive from unbuffed area with a clean cloth (item 16, table 2-11) and acetone (item 3, table 2-11). Wear gloves (item 4, table 2-11).

(i) Wet fabric reinforcement patch (1, figure 2-29) with acetone (item 3, table 2-11). Shake out excess acetone.

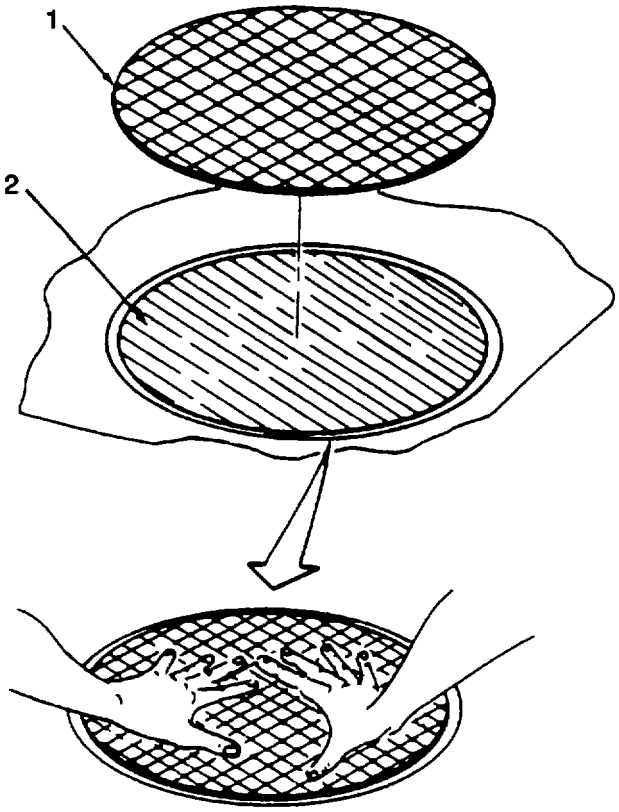

Figure 2-29. Applying Reinforcement Patch

(j) Center wet patch (1) over defect area and press into wet adhesive (2) with gloved fingers to make sure patch is free of air bubbles and loose edges. Allow to air dry/cure for a minimum of thirty (30) minutes.

(k) Prepare new batch of adhesive (item 1, table 2-11) and carefully apply a uniform coat over patched area (1, figure 2-30) to no more than 1/8 inch buffed area edge. Use a brush (item 6, table 2-11). Smooth surface with gloved fingers wet with acetone (item 3, table 2-11) and remove any excess adhesive from unbuffed area with a dean cloth (item 16, table 2-11) and acetone (item 3, table 2-11). Wear gloves (item 4, table 2-11).

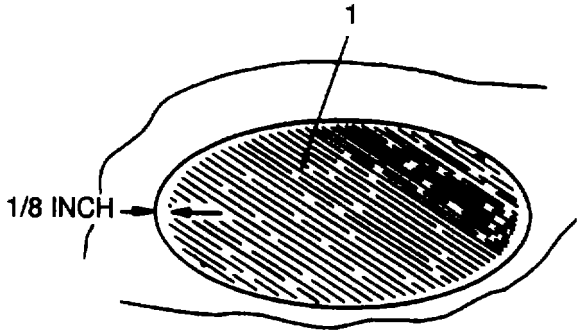

Figure 2-30. Applying Adhesive Over Area No More Than 1/8 Inch Buffed Area

(l) Allow finished repair to set for 1 hour before moving fuel cell.

(m) Allow finished repair to air cure for 24 hours before use.

(2) Visually inspect repair for workmanship, no loose edges, no voids and adhesive fully cured.

e. *Repair Fuel Cell Inner Liner.*

WARNING

Acetone, barrier cement, repair adhesives and its components are flammable and toxic. They can irritate skin and cause bums. Use only with adequate ventilation and wear a NIOSH approved air-purifying respirator for organic vapors. Keep away from heat or open flame. Wear safety glasses, gloves and protective clothing to avoid contact with skin, eyes and clothes. If contact occurs, flush areas with water and get medical attention for eyes.

(1) Repair blisters, cuts, tears, snags and abrasions that damage but do not penetrate the inner reinforcement plies (no fabric damage) as follows:

(a) Use knife and trim away loose, damaged or blistered edges (figure 2-31).

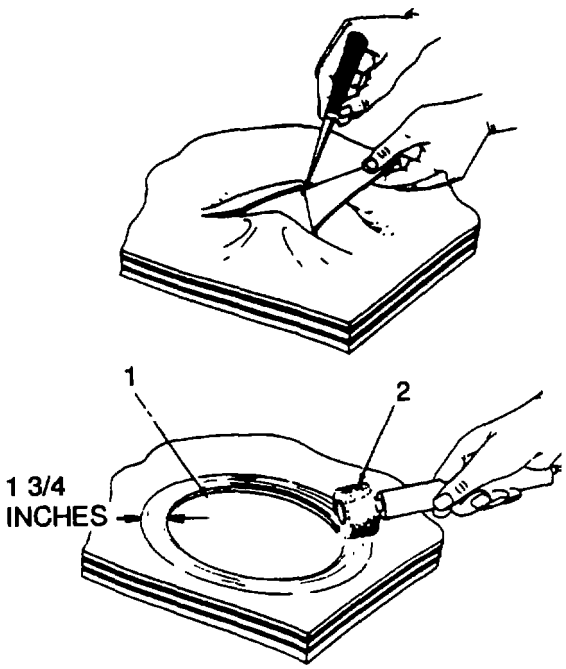

Figure 2-31. Trimming Away Damaged Areas

(b) Clean damaged area using a dean cloth (item 16, table 2-11) dampened with acetone (item 3, table 2-11). Wear gloves (item 4, table 2-11).

WARNING

Ensure all drills are non-sparking.

(c) Buff surface around damage (1) 1 3/4 inches larger in all directions than damaged area. Use portable drill (2) abrasive arbor and/or scotch-brite. Buff only to remove gloss without excessively reducing inner layer thickness.

(d) Clean buffed area. Use a dean cloth (item 16, table 2-11) dampened with acetone (item 3, table 2-11). Wear gloves (item 4, table 2-11).

NOTE

Mix adhesive in accordance with manufacturer's instructions, except do not mix full quantity of Parts 2 and 3 with Part 1. The full contents of Parts 2 and 3 can be mixed together and then used as necessary (mixed shelf life is 6 months). When mixing Parts 2 and 3 with Part 1, mix only quantity needed to perform repair. Mixing ratio is 58.24% of Parts 2 and 3 (mixed together) to 41.76% of Part 1.

(e) Prepare repair adhesive (item 1, table 2-11) by blending the ingredients of Part 2 and 3 together first and then transfer the mixture of Part 2 and 3 into the can of Part 1. Wear gloves (item 4, table 2-11).

CAUTION

Unmixed adhesive will not cure.

(f) Stir adhesive mixture with tongue depressor (item 5, table 2-11) for approximately 5 minutes. Make certain components are completely blended together.

(g) Apply a light coat of adhesive mixture (1, figure 2-26) over buffed repair area to no more than 1/4 inch of O.D. of buffed area (2). Use a brush (item 6, table 2-11). Smooth surface with gloved fingers wet with acetone (item 3, table 2-11) and remove any excess adhesive from unbuffed area. Use dean cloth (item 16, table 2-11) dampened with acetone (item 3, table 2-11). Wear gloves (item 4, table 2-11). Allow to air cure for approximately 30 minutes.

CAUTION

Barrier adhesive is soluble in acetone. Do not apply acetone to repair area after applying barrier adhesive.

CAUTION

Do not shake barrier adhesive. Stir with a wooden tongue depressor.

CAUTION

Keep lid on can of barrier adhesive when not in use to prevent evaporation and thickening.

(h) Apply a uniform coat of barrier adhesive (item 2, table 2-11) (1, figure 2-32) in one direction over previous coat of repair adhesive (2) to within no more than 1/4 inch of repair area of O.D. Use a brush. Remove any excess adhesive from unbuffed area. Use dean cloth (item 16, table 2-11) dampened with acetone (item 3, table 2-11). Wear gloves (item 4, table 2-11). Allow barrier to dry to touch.

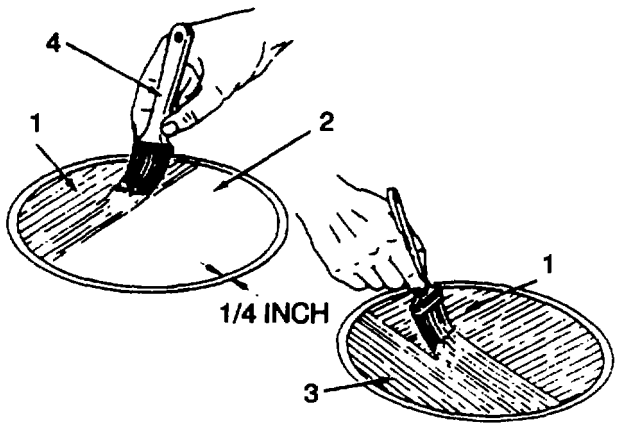

Figure 2-32. Applying Adhesive Over Previous Coat

(i) Apply a second coat of barrier adhesive (3) over first barrier coat (1) at 90° to the application of first coat. Use a brush (item 6, table 2-11). Allow second coat to air dry for approximately 30 minutes.

(j) Prepare repair adhesive as in steps (e) and (f).

CAUTION

When smoothing adhesive surface with gloved fingers wet with acetone, lightly touch only the surface of the adhesive. Insure acetone does not contact barrier cement previously applied, as the barrier cement is soluble in acetone. Damage to the barrier cement can result in the barrier being damaged.

(k) Prepare a new batch of adhesive (item 1, table 2-11) and carefully apply a uniform (liberal/heavy) coat of adhesive mixture (1, figure 2-30) over previous coats of barrier adhesive to within no more than 1/18 inch of O.D. of buffed edge area. Use a brush (item 6, table 2-11). Smooth surface with gloved fingers wet with acetone (item 3, table 2-11) and remove any excess adhesive from unbuffed area Use dean cloth dampened with acetone (item 3, table 2-11). Wear gloves (item 4, table 2-11).

NOTE

When performing interior loose seam damage repair, do not apply fabric patch. Proceed to para (m).

(l) Cut a fabric patch (item 8, table 2-11) that is 1/8 inch larger all around than the area of barrier coverage. Dampen patch with acetone (item 3, table 2-11), shake out excess solvent and lay the patch into the wet adhesive. Using gloved finger and brush, work out all air. Allow to air dry for 30 minutes.

(m) Apply a light coat of adhesive (item 1, table 2-11) over the fabric patch and out to the maximum area having barrier adhesive. Do not apply adhesive to unbuffed areas.

CAUTION

Do not flex fuel cell in repair area.

(n) Allow finished repair to set for 1 hour before moving fuel cell.

(o) Allow finished repair to air cure for 24 hours at room temperature of 70°F (33°C) minimum before use.

(2) Visually inspect repair for workmanship, no loose edges, no voids and adhesive fully cured.

f. *Repair Fuel Cell Interior Plies.*

WARNING

Acetone, barrier cement, repair adhesives and its components are flammable and toxic. They can irritate skin and cause bums. Use only with adequate ventilation and wear a NIOSH approved air-purifying respirator for organic vapors. Keep away from heat or open flame. Wear safety glasses, gloves and protective clothing to avoid contact with skin, eyes and clothes. I contact occurs, flush areas with water and get medical attention for eyes.

(1) Repair hole damage, cuts, tears and snags that penetrate one or more interior plies (fabric damage) as follows:

(a) Use knife and trim away loose, damaged or blistered interior edges (figure 2-24).

(b) *Clean damaged area using a dean cloth (item 16*, table 2-11) dampened with acetone (item 3, table 2-11). Wear gloves (item 4, table 2-11).

WARNING
Ensure all drills are non-sparking.

(c) Buff surface around damage (1, figure 2-27) 2 1/4 inches larger in all directions than damaged area. Use portable drill, abrasive arbor (2), and/or scotch-brite. Buff only to remove gloss without excessively reducing interior ply thickness.

(d) Clean buffed area. Use clean cloths (item 16, table 2-11) dampened with acetone (item 3, table 2-11). Wear gloves (item 4, table 2-11).

(e) Cut fabric reinforcing patch (1, figure 2-28) from nylon fabric (item 7, table 2-11) large enough to overlap damaged area (1) 2 inches in all directions.

NOTE
Mix adhesive in accordance with manufacturer's instructions, except do not mix full quantity of Parts 2 and 3 with Part 1. The full contents of Parts 2 and 3 can be mixed together and then used as necessary (mixed shelf life is 6 months). When mixing Parts 2 and 3 with Part 1, mix only quantity needed to perform repair. Mixing ratio is 58.24% of Parts 2 and 3 (mixed together) to 41.76% of Part 1.

(f) Prepare repair adhesive (item 1, table 2-11) by blending the ingredients of Part 2 and 3 together first and then transfer the mixture of Part 2 and 3 into the can of Part 1. Wear gloves (item 4, table 2-11).

CAUTION
Unmixed adhesive will not cure.

(g) Stir adhesive mixture with tongue depressor (item 5, table 2-11) for approximately 5 minutes. Make certain components are completely blended together.

(h) Fill cavity of damaged area (1, figure 2-33) level with inner liner with adhesive mixture (2) to make a smooth continuous surface to apply barrier over. Smooth surface with gloved fingers wet with acetone (item 3, table 2-11). Remove any excess adhesive from buffed area using a dean cloth (item 16, table 2-11) dampened with acetone (item 3, table 2-11). Apply adhesive mixture to no more than 1/4 inch of O.D. of buffed area (3).

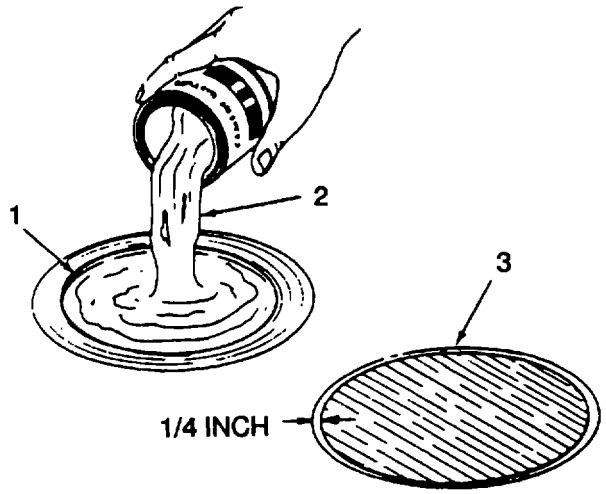

Figure 2-33. Filling Cavity with Adhesive Mixture

(i) Allow adhesive to air cure for approximately 30 minutes.

CAUTION
Barrier adhesive is soluble in acetone. Do not apply acetone to repair area after applying barrier cement.

CAUTION
Do not shake barrier adhesive. Stir with a wooden tongue depressor.

CAUTION

Keep lid on can of barrier adhesive when not in use to prevent evaporation and thickening.

(j) Carefully apply a uniform coat of barrier adhesive in one direction (1, figure 2-32) over previous coat of repair adhesive mixture (2). Use a brush (4). Remove any excess adhesive from unbuffed area. Use a dean cloth (item 16, table 2-11) and acetone (item 3, table 2-11). Wear gloves (item 4, table 2-11). Allow barrier to dry to touch.

(k) Apply a second coat of barrier adhesive (3) over first coat at 90° to the application of the first coat. Use a brush. Allow second coat to air dry for 30 minutes.

(l) Prepare repair adhesive. (See steps (f) and (g)).

CAUTION

When smoothing adhesive surface with gloved fingers wet with acetone, lightly touch only the surface of the adhesive. Insure acetone does not contact barrier cement previously applied, as the barrier cement is soluble in acetone. Damage to the barrier cement can result in the barrier being damaged.

(m) Prepare a new batch of adhesive (item 1, table 2-11) and carefully apply a uniform (liberal/heavy) coat of repair adhesive (1, figure 2-34) over previous coats of barrier adhesive. Smooth surface with gloved fingers wet with acetone (item 3, table 2-11) and remove any excess adhesive from unbuffed area with a dean cloth (item 16, table 2-11) and acetone (item 3, table 2-11). Wear gloves (item 4, table 2-11).

(n) Wet fabric reinforcement patch (2) with acetone (item 3, table 2-11). Shake out excess acetone.

(o) Center wet patch over defect area and press into wet adhesive (1) with fingers to make certain patch is free of air bubbles and loose edges.

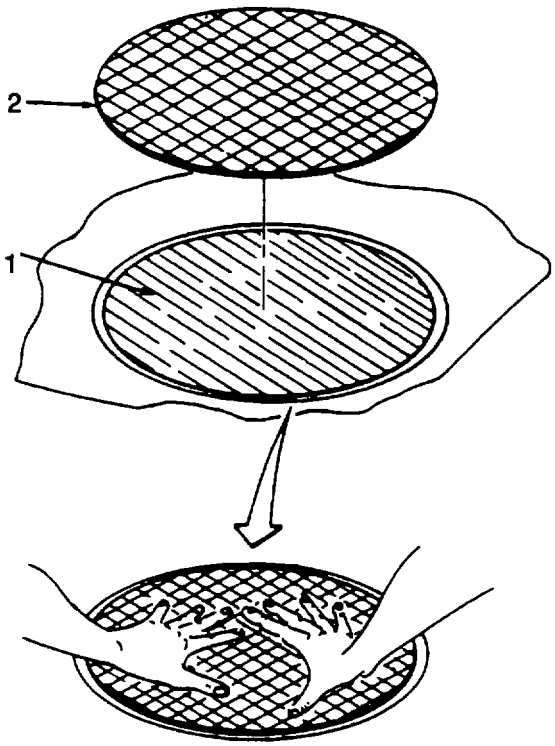

Figure 2-34. Centering Wet Patch

(p) Allow cement and fabric patch to air cure approximately 30 minutes.

CAUTION

When smoothing adhesive surface with gloved fingers wet with acetone, lightly touch only the surface of the adhesive. Insure acetone does not contact barrier cement previously applied, as the barrier cement is soluble in acetone. Damage to the barrier cement can result in the barrier being damaged.

(q) Prepare a new batch of adhesive (item 1, table 2-11) and carefully apply a uniform coat of repair adhesive (1, figure 2-30) over patched area to within no more than 1/8 inch of O.D. of buffed edge. Smooth surface with gloved fingers wet with acetone (item 3, table 2-11). Use a brush (item 6, table 2-11). Remove any excess adhesive with cloths dampened with acetone (item 3, table 2-11). Wear gloves (item 4, table 2-11).

CAUTION

Do not flex cell in repair area.

(r) Allow finished repair to set for 1 hour before moving fuel cell.

(s) Allow finished repair to air cure for 24 hours before use.

(2) Visually inspect repair for workmanship, no loose edges, no voids and adhesive fully cured.

g. Repair/Replacement of Internal and External Support Fittings/Hangers.

WARNING

Acetone, barrier cement, repair adhesives and its components are flammable and toxic. They can irritate skin and cause bums. Use only with adequate ventilation and wear a NIOSH approved air-purifying respirator for organic vapors. Keep away from heat or open flame. Wear safety glasses, gloves and protective clothing to avoid contact with skin, eyes and clothes. If contact occurs, flush areas with water and get medical attention for eyes.

Repair or replacement of internal and external support fittings/hangers shall be performed as follows:

(1) Clean area using a clean cloth (item 16, table 2-11) dampened with acetone (item 3, table 2-11). Wear gloves (item 4, table 2-11).

NOTE

Insure hanger is reinstalled in original location. Use wax pencil to mark location. Mark location by drawing outline of hanger just beyond area to be buffed.

(2) Buff surface of fuel cell around area where hanger is to be installed, 3/8 inch larger in all directions than hanger.

(3) Buff hanger mounting surface.

(4) Clean buffed area of fuel cell and hanger mounting surfaces with dean cloth (item 16, table 2-11) dampened with acetone (item 3, table 2-11). Wear gloves (item 4, table 2-11).

NOTE

If innerliner barrier is damaged, perform innerliner barrier repair first.

NOTE

Mix adhesive according to manufacturer's kit instructions.

(5) Prepare repair adhesive (item 1, table 2-11) by transferring entire contents of Part 2 and 3 into can of Part 1. Wear gloves (item 4, table 2-11).

CAUTION

Unmixed adhesive will not cure.

(6) Stir adhesive mixture with tongue depressor (item 5, table 2-11) for approximately 5 minutes. Make certain components are completely blended together.

(7) Apply a light, uniform coat of adhesive mixture over buffed area to no more than 1/8 inch of O.D. of buffed are. Use a brush (item 6, table 2-11). Remove any excess from unbuffed area using a dean cloth (item 16, table 2-11) dampened with acetone (item 3, table 2-11). Wear gloves (item 4, table 2-11).

(8) Immediately following step (7), apply a light, uniform coat of adhesive mixture over mounting surface of hanger. Use a brush (item 6, table 2-11). Wear gloves (item 4, table 2-11).

(9) Position hanger on adhesived fuel cell surface. Center hanger in area marked with wax pencil. Press down on hanger to remove any air bubbles and insure there are no loose edges or voids under edge of flange.

(10) With gloved fingers wet with acetone (item 3, table 2-11), smooth excess adhesive around edge of hanger.

(11) Apply one strip of masking tape (item 10, table 2-11) in vertical direction first and then one strip of masking tape in horizontal direction to hold hanger in position.

CAUTION

Do not flex fuel cell repair area.

(12) Place a 10 to 25 pound shot bag (item 23, table 2-11) on repair. Polyethylene, waxed paper (item 24, table 2-11) should be placed between the hanger and shot bag to prevent sticking of shot bag to repair.

(13) Allow finished repair to set for 4 hours before moving fuel cell.

(14) Allow finished repair to air cure for 24 hours at room temperature of 70°F (33°C) minimum before use.

h. *Fitting Rework.*

(1) Fittings having surface corrosion and/or scratches, within allowable limits, can be reworked in accordance with the following procedures.

WARNING

Wear rubber gloves and eye protection throughout fitting rework procedure, except when using emery cloth and Scotchbrite pad.

(2) Rework fitting as follows:

(a) If there is heavy accumulation of grease, oil or dirt, or if the metal is severely corroded, dean with a piece of dean cheesecloth (item 16, table 2-11) dampened with acetone (item 3, table 2-11). If acetone does not completely dean fitting or acetone beads up, dean fitting with a commercial cleaner (i.e. Ajax) (item 26, table 2-11).

(b) After cleaning, wipe or rinse cleaning agent(s) from fuel cell fitting and surrounding area with water.

(c) Immediately prior to rework, wipe all contaminants from the fitting using a dean piece of cheesecloth (item 16, table 2-11) dampened with acetone (item 3, table 2-11).

CAUTION

Metal applicators, cleaning devices or materials shall not be used under any circumstances in this procedure.

(d) If metal is severely corroded and/or there are scratches or gouges, buff with emery cloth (120 grit) (item 17, table 2-11) until surface is free of corrosion, scratches and/or gouges.

(e) Using fine emery cloth (300 grit) (item 13, table 2-11), sand/polish surface previously buffed with 120 grit emery cloth (item 17, table 2-11) until surface is smooth and free of buffing scratches.

(f) Remove any exposed surface corrosion which lies above the normal metal surface or which appears loose or powdery by rubbing with a Scotchbrite pad (item 12, table 2-11).

(g) Wipe off residue with a piece of dean cheesecloth (item 16, table 2-11) dampened with acetone (item 3, table 2-11).

WARNING

When working with alodine 1200 wear gloves, safety goggles and protective clothing. Wear a NIOSH approved respirator. If contact occurs, flush areas with water and get medical attention.

CAUTION

If artist's brush has metal bristle retainer, wrap the retainer with two layers of masking tape so all of the retainer is covered.

(h) Apply, brush Alodine 1200 coating (item 14, table 2-11) liberally to the metal surface using artist brush (item 15, table 2-11) or equivalent and allow to stand one (1) minute.

(i) Apply additional coats of Alodine 1200 (item 14, table 2-11) at one (1) minute intervals until a light gold or tan color appears. No more than five (5) coats are required for coating formation. If no coating occurs, reclean the surface and reapply Alodine 1200 (item 14, table 2-11).

CAUTION Wash the brush thoroughly in water immediately after use, as the Alodine 1200 will attack the bristles.

(j) Flush the work area thoroughly with distilled water (item 11, table 2-11) followed by wiping with a clean piece of dean cheesecloth (item 16, table 2-11).

2-8. Fuel Cell Repair (Amfuel, Firestone, Uniroyal).

a. Fuel Cell Damage Classification and Repair Limits. (General Information)

WARNING

All regulations and instructions for handling fuels shall be strictly observed.

The following WARNINGS and CAUTIONS shall be observed before and during removal, cleaning, repair, and testing of fuel cells.

WARNING

To prevent asphyxiation from fuel, oil and alcohol fumes, you must wear protective clothing, i.e., an apron, an air supplied respirator, a face shield and rubber gloves. Use an air compressor to continuously pump air into the tank when personnel are in the tank. Ground the air hose to the tank. Assign a person to monitor the person in the tank in the event he is overcome by fumes.

WARNING

Use an explosometer to insure safe conditions in the fuel cell before starting work.

WARNING

Acetone and repair adhesives are flammable and toxic. Keep away from heat, sparks and open flame. Wear safety glasses, gloves and protective clothing to prevent contact. Wear a NIOSH approved air-purifying respirator for organic vapors and work in a well ventilated area. If contact occurs, flush areas with water and get medical attention. If ingestion occurs get medical attention at once.

WARNING

Work only in approved areas with adequate ventilation and where emergency equipment can move freely. Initial deactivation must be done out-of-doors.

WARNING

Make sure fuel cell and all cleaning, repair, and test equipment are properly grounded.

WARNING

Do not enter cell unless another person is available as safety monitor.

WARNING

Do not enter fuel cell wearing shoes, or with tools in your pockets.

WARNING

Do not allow hot work lamps to contact fuel cell. Use only explosion proof light.

WARNING

Purge fuel cell prior to inspection and repair. Refer to paragraph 2-5f (4) purging procedure.

CAUTION

Be careful when handling fuel cell at temperatures below 20°F (-6.67°C) to prevent cracking molded sections.

CAUTION

Do not expose fuel cell to any source of strong light for a long period.

CAUTION

Do not puncture or scratch lining of fuel cell. If lining is broken, fuel penetrates and activates self-sealing layers. Activated layers swell and trap fuel. Activated green spongy material also contaminates fuel system. This makes it necessary to replace fuel cell and flush fuel system.

CAUTION

Protect fuel cell at all times from sharp objects and from extremes of temperature and humidity.

CAUTION

Crashworthy, self-sealing fuel cells shall not be folded and/or collapsed for periods of more than four (4) hours. Fuel cells must be supported when stored, shipped, and/or repaired.

CAUTION

Preservation of a fuel cell shall be delayed until repair work is completed, unless it will be more than 30 days before repairs are started. This reduces the cleanup effort by repair personnel prior to making repairs. Refer to paragraph 2-5f (5) for preservation procedure.

NOTE

The following repair criteria and procedures apply to self-sealing, crash resistant fuel cells.

(1) Classify fuel cell damage as follows: Minor damage. See table 2-5 for serviceable limits.

(2) Reparable damage is classified as follows:

(a) Internal Blister Damage. Blisters exceeding 1/4 inch diameter must be repaired. Cut blister(s) open, remove fluid in blister, dean, buff, dean, cement loose blister material down, and apply an internal patch.

(b) Internal and External Loose Seam (Lap or Splice, Edge, or Fitting Flange) Damage. Refers to loose edge of lap splice, reinforcement ply, or fitting flange. All loose seams/edges of lap splices, reinforcement plies, or fitting flanges (exposed edge on interior or exterior surface of cell) with up to 1/4 inch of material missing can be cleaned, buffed, cleaned, cemented and the repair rolled with a roller. For seams and splices with up to 2 square inches of material missing or fitting flanges with 1/4 inch minimum to 1/2 inch maximum of material missing or otherwise damaged, a patch repair is required.

(c) Cuts, Tears, Chafing, Scuffs or Snag Damage. All cuts, tears, chafing, scuffs or snags occurring to the innerliner or outerply, where the coating is missing or cord/fabric is exposed but not tom, can be buffed and cemented, and allowed to air dry 8 hours. All cuts, tears, chafing, scuffs, or snags, less than 2 inches in length or area, occurring to the innerliner, where fabric is torn/cut require an internal patch repair.

(d) Hole or Cut 1/8 Inch or Less in Diameter in External Surface or Penetrating the Entire Cell Wall. No sealant activation is allowed.

(e) Loose or Separated Hanger or Loop. Loose or separated hangers or loops can be cleaned, buffed, cleaned, and cemented back in place.

(f) Replacement of Fitting Thread Inserts (Helicoils). CTM 1-1500-204-23-6).

(g) Fitting Damage/Finish. Fittings which have inter-crystalline corrosion or scratches, outside of the critical sealing surface, to a depth of .030 inch can be reworked.

b. Non-Repairable Damage. Damage that is not reparable is classified as follows:

(1) Damage which extends into a comer (three plane).

(2) Damage which has led to activation of the sealant ply/plies.

(3) Cuts or tears longer than 2 inches and any damaged area larger than 2 square inches.

(4) A hole larger than 1/8 inch in diameter which penetrates the entire cell wall (through hole).

(5) A hole which penetrates beyond the exterior surface ply larger than 1/8 inch in diameter.

(6) External blister damage.

(7) Damage to fitting O-ring groove and damage inside of the critical sealing surface. Also, damage within 1/4 inch of O-ring grooves, bolt holes, etc. inside or outside of critical sealing surface is not reparable.

c. *Repairing Fuel Cell.*

(1) *Internal Blister Repair.*

WARNING

Acetone and repair adhesives are flammable and toxic. Keep away from heat, sparks and open flame. Wear safety glasses, gloves and protective clothing to prevent contact. Wear a NIOSH approved air-purifying respirator for organic vapors and work in a well ventilated area. If contact occurs, flush areas with water and get medical attention. If ingestion occurs get medical attention at once.

(a) Cut the blister open. The cut should resemble a "T' or "Y'. Remove any fluid inside of blister.

(b) Clean interior area of blister using a piece of clean cheesecloth (item 16, table 2-11) dampened with acetone (item 3, table 2-11). Wear gloves (item 4, table 2-11).

(c) Lightly, hand buff all bonding surfaces of the blister using emery cloth (120 grit) (item 17, table 2-11).

(d) Clean buffed areas. Use a clean piece of cheesecloth (item 16, table 2-11) dampened with acetone (item 3, table 2-11). Wear gloves (item 4, table 2-11).

WARNING

Repair adhesive is flammable and should be kept away from any ignition source.

NOTE

Adhesive materials should be kept tightly sealed in individual containers in a cool, dry place.

(e) Prepare repair adhesive (item 18, table 2-11). Repair adhesive is shipped as a two component kit. Part number 22-20556 (shelf life 6 months) is the masterbatch and part number 22-20555 (shelf life 12 months) is the catalyst solution. Stir each component well before mixing. Mix the two parts together and thoroughly blend as follows: 90% of 22-20556 (Masterbatch) to 10% of 22-20555 (Catalyst) by weight. Stir mixture for 10-15 minutes. The adhesive now should be labeled "PU-459". Maximum shelf life after mixing is 6 hours.

NOTE

The adhesive should be used sparingly. Two (2) thin, even coats will provide better adhesion than two thick, puddled coats. Acetone is used as a solvent for the adhesive and, when the cemented surface appears dry to touch, it may be freshened or made tacky again by application of this solvent.

(f) Brush-coat buffed surfaces of blister with one coat of adhesive (item 18, table 2-11) and allow to dry 20-60 minutes.

NOTE

To determine if adhesive is tacky, test it by pressing a knuckle gently against the cemented surface and withdrawing it (if practical). Proper tackiness is achieved when a few threads of adhesive stick to the knuckle. This procedure is referred to as the knuckle test.

(g) Apply a second coat of adhesive (item 18, table 2-11) to buffed areas and allow to dry until tacky. Adhesive can become tacky within 2 to 4 minutes, depending on ambient temperature and humidity. Perform knuckle test.

(h) Press cemented surfaces together.

(i) If necessary to restore tack to the cemented surfaces, use a piece of dean cheesecloth (item 16, table 2-11) dampened with acetone, lightly wipe over cemented areas. Allow solvent to evaporate 10 to 20 seconds or until cemented areas become "tacky."

NOTE

If adhesive dry times are exceeded, reapplication of one coat of adhesive may be done only once (total of three coats). If dry time is again exceeded, remove adhesive from applied area using, acetone and/or buffing with emery cloth (120 grit minimum).

(j) With a one-inch roller, roll over repaired area to remove any trapped air. If innerliner sticks to roller, dampen innerliner with dean cloth (item 16, table 2-11) dampened with acetone (item 3, table 2-11). Wear gloves (item 4, table 2-11). Allow cement to dry for 60 minutes minimum.

(k) Place a 10 to 25 pound shot bag (item 23, table 2-11) on repair, if practical. Polyethylene, waxed paper (item 24, table 2-11) or equivalent should be placed between the cemented area and shot bag to prevent sticking of shot bag to repair. Allow adhesive to dry 60 minutes minimum.

(l) Clean innerliner of fuel cell at least 1 3/4 inches larger in all directions around "Y" cut. Use a piece of dean cheesecloth (item 16, table 2-11) dampened with acetone (item 3, table 2-11).

(m) Lightly, hand buff innerliner of fuel cell around "'r or "Y" cut, 1 3/4 inches in all directions.

(n) Clean buffed area. Use a piece of dean cheesecloth (item 16, table 2-11) dampened with acetone (item 3, table 2-11). The surface must be dean and dry in order to apply patch.

(o) Cut a patch from fabric (item 19, table 2-11). The patch should be 1 1/2 inches larger in all directions around "' or "Y' cut. Lightly, hand buff gum side (side with dull finish) of patch with emery cloth (item 17, table 2-11). Remove buffing dust by wiping patch with cheesecloth (item 16, table 2-11) dampened with acetone (item 3, table 2-11). Wear gloves (item 4, table 2-11).

NOTE

Do not apply adhesive beyond buffed areas.

(p) Apply one coat of adhesive (item 18, table 2-11) to buffed side of patch and cell innerliner and allow to dry 20-60 minutes.

(q) Apply a second coat of adhesive (item 18, table 2-11) to buffed areas of patch and cell innerliner and allow to dry until tacky. Adhesive can become tacky within 2 to 4 minutes, depending on ambient temperature and humidity. Perform knuckle test.

(r) If necessary to restore tack of the cemented surfaces, use a piece of cheesecloth (item 16, table 2-11) dampened with acetone (item 3, table 2-11) and lightly wipe over cemented areas. Allow solvent to evaporate 10 to 20 seconds or until cemented areas become "tacky." Wear gloves (item 4, table 2-11).

(s) While adhesive is still tacky, apply patch to cemented area of the cell innerliner, centering patch over damaged area. With the one-inch roller (item 20, table 2-11), roll the patch to the cemented area and roll it down so as not to trap air between patch and innerliner.

(t) Place a 10 to 25 pound force by damping (C clamp (item 21, table 2-11) and two pieces of wood (item 22, table 2-11)), shot bag (item 23, table 2-11), etc., if practical on repair. Polyethylene, waxed paper (item 24, table 2-11), or equivalent should be placed between the patch and force applying device to prevent sticking of the force applying device to the repair.

(u) Allow repair to remain undisturbed for at least 8 hours. The fuel cell should not be returned to service for 24 hours.

(v) Visually inspect repair for workmanship, no loose edges, no voids, and adhesive fully cured. If there is a defect in repair, recement per above procedure.

(2) Internal and External Loose Seams (Lap or Splice, Edge, or Fitting Flange), With Up to 1/4 Inch of Material Missing or Damaged..

WARNING

Acetone and repair adhesives are flammable and toxic. Keep away from heat, sparks and open flame. Wear safety glasses, gloves and protective clothing to prevent contact. Wear a NIOSH approved air-purifying respirator for organic vapors and work in a well ventilated area. If contact occurs, flush areas with water and get medical attention. H ingestion occurs get medical attention at once.

(a) Gently pull back loose seam, etc. and dean area to be bonded using a piece of dean cheesecloth (item 16, table 2-11) dampened with acetone (item 3, table 2-11). Wear gloves (item 4, table 2-11).

(b) Lightly, hand buff both surfaces to be bonded.

(c) Clean buffed areas using a piece of dean cheesecloth (item 16, table 2-11) dampened with acetone (item 3, table 2-11). Wear gloves (item 4, table 2-11). Allow cleaned areas to dry.

WARNING

Repair adhesive is flammable and should be kept away from any ignition source.

NOTE

Adhesive materials should be kept tightly sealed in individual containers in a cool, dry place.

(d) Refer to paragraph c(1)(e) for mixing instructions.

NOTE

Do not apply adhesive beyond buffed areas.

NOTE

The adhesive should be used sparingly. Two (2) thin, even coats will provide better adhesion than two thick, puddled coats. Acetone is used as a solvent for the adhesive and, when the cemented surface appears dry to touch, it may be freshened or made tacky again by application of this solvent.

(e) Brush coat buffed areas with one coat of adhesive and allow to dry 20-60 minutes.

NOTE

To determine if adhesive is tacky, test it by pressing a knuckle gently against the cemented surface and withdrawing it (if practical). Proper tackiness is achieved when a few threads of adhesive stick to the knuckle. This procedure is referred to as the knuckle test.

(f) Apply a Second coat of adhesive (item 18, table 2-11) to buffed areas and allow to dry until tacky. Adhesive can become tacky within 2 to 4 minutes, depending on ambient temperature and humidity.

(g) If necessary to restore tack to the cemented surfaces, use a piece of dean cheesecloth (item 16, table 2-11) dampened with acetone (item 3, table 2-11), lightly wipe over cemented areas. Allow solvent to evaporate 10 to 20 seconds or until cemented areas become "tacky." NOTE If adhesive dry times for the second coat is exceeded, application of one more coat of adhesive may be done, for a total of three coats. If dry times for all three coats are again exceeded, remove all adhesive from applied area using, acetone and/or buffing with emery cloth (120 grit minimum).

(h) Press cemented surfaces together.

(i) With a one-inch or smaller roller (item 20, table 2-11), roll over repaired area to remove any trapped air.

(j) Place a 10 to 25 pound force by damping (C-damp (item 21, table 2-11) and two pieces of wood (item 22, table 2-11)), shot bag (item 23, table 2-11), etc., if practical on repair. Polyethylene, waxed paper (item 24, table 2-11), or equivalent should be placed between the repaired area and force applying device, to prevent sticking of the force applying device to the repair.

(k) Allow repair to remain undisturbed for at least 8 hours. The fuel cell should not be returned to service for 24 hours.

(l) Visually inspect repair for workmanship, no loose edges, no voids, and adhesive fully cured.

(3) Internal and External Loose Seams (Lap or Splice, Edge, or Fitting Flange) Seams With Up to 2 Sq. Inches of Material Missing Fitting Flanges With 1/4 to 1/2 Inch of Material Missing/Damaged.

WARNING

Acetone and repair adhesives are flammable and toxic. Keep away from heat, sparks and open flame. Wear safety glasses, gloves and protective clothing to prevent contact. Wear a NIOSH approved air-purifying respirator for organic vapors and work in a well ventilated area. If contact occurs, flush areas with water and get medical attention. If ingestion occurs get medical attention at once.

(a) If part of the seam is loose, first perform procedure in paragraphs (a) through (j) Internal and External Loose Seam (Lap or Splice, Edge, or Fitting Flange), With Up to 1/4 Inch of Material Missing or Damaged. Allow repair to dry at least 60 minutes before proceeding to step (b) below.

(b) Cut a patch from repair material (item 19, table 2-11 for interior repair, item 25, table 2-11 for exterior repair). The patch shall overlap damaged area (from outer edge of damaged area) 1 1/2 inches in all directions. If possible the patch shall be round. If a round patch is not feasible, an oval or square/rectangular patch with round comers shall be used.

(c) Clean surface of fuel cell 1/4 to 1/2 inch larger in all directions where patch is to be applied. Use a piece of dean cheesecloth (item 16, table 2-11) dampened with acetone (item 3, table 2-11). Wear gloves (item 4, table 2-11).

(d) Lightly, hand buff surface of fuel cell using emery cloth (120 grit) (item 17, table 2-11). Buff entire fuel cell surface cleaned in step (c) above.

(e) Clean buffed area. Use a piece of clean cheesecloth (item 16, table 2-11) dampened with acetone (item 3, table 2-11). Wear gloves (item 4, table 2-11). The surface must be clean and dry in order to apply repair patch.

(f) Lightly, hand buff gum side (side with dull finish) of patch with emery cloth (120grit) (item 17, table 2-11). Remove buffing dust by wiping patch with cheesecloth (item 16, table 2-11) dampened with acetone (item 3, table 2-11). Wear gloves (item 4, table 2-11).

WARNING

Repair adhesive is flammable and should be kept away from any ignition source.

NOTE

Adhesive materials should be kept tightly sealed in individual containers in a cool, dry place.

(g) Refer to paragraph c(1)(e) for mixing instructions.

NOTE

Do not apply adhesive beyond buffed areas.

NOTE

The adhesive should be used sparingly. Two (2) thin, even coats will provide better adhesion than two thick, puddled coats. Acetone is used as a solvent for the adhesive and, when the cemented surface appears dry to touch, it may be freshened or made tacky again by application of this solvent.

(h) Apply one coat of adhesive (item 18, table 2-11) to buffed side of patch and cell innerliner and allow to dry 20-60 minutes.

NOTE

To determine if adhesive is tacky, test it by pressing a knuckle gently against the cemented surface and withdrawing it (if practical). Proper tackiness is achieved when a few threads of adhesive stick to the knuckle. This procedure is referred to as the knuckle test.

(i) Apply a second coat of adhesive (item 18, table 2-11) to buffed areas of patch and cell innerliner and allow to dry until tacky. Adhesive can become tacky within 2 to 4 minutes, depending on ambient temperature and humidity. Perform knuckle test.

NOTE

If adhesive dry times are exceeded, reapplication of one coat of adhesive may be done only once (total of three coats). If dry time is again exceeded, remove adhesive from applied area using, acetone and/or buffing with emery cloth (120 grit minimum).

(j) If necessary to restore tack to the cemented surfaces, use a piece of clean cheesecloth (item 16, table 2-11) dampened with acetone (item 3, table 2-11), lightly wipe over cemented areas. Allow solvent to evaporate 10 to 20 seconds or until cemented areas become "tacky."

(k) While adhesive is still tacky, apply patch to cemented area of the cell surface, centering patch over damaged area, in both length and width directions. With the one-inch roller (item 20, table 2-11), roll the patch to the cemented area and roll it down a 1/2 inch to 1 inch across at a time so as not to trap air between patch and fuel cell surface.

(l) Place a 10 to 25 pound force by damping (C-clamp (item 21, table 2-11) and two pieces of wood (item 22, table 2-11)), shot bag (item 23, table 2-11), etc., if practical on repair. Polyethylene, waxed paper (item 24, table 2-11) should be placed between the patch and force applying device to prevent sticking of the force applying device to the repair.

(m) Allow repair to remain undisturbed for at least 8 hours. The fuel cell should not be returned to service for 24 hours.

(n) Visually inspect repair for workmanship, no loose edges, no voids, and adhesive fully cured. If there is a defect in repair, recement per above procedure.

(4) *Internal and External Cuts, Tears, Chafing, Scuffs, or Snags Coating Missing, Cord/Fabric Exposed But Not Torn.*

WARNING

Acetone and repair adhesives are flammable and toxic. Keep away from heat, sparks and open flame. Wear safety glasses, gloves and protective clothing to prevent contact. Wear a NIOSH approved air-purifying respirator for organic vapors and work in a well ventilated area. If contact occurs, flush areas with water and get medical attention. If ingestion occurs get medical attention at once.

(a) Clean damaged area using a piece of dean cheesecloth (item 16, table 2-11) dampened with acetone (item 3, table 2-11). Wear gloves (item 4, table 2-11).

NOTE

Do not buff exposed fabric. If during buffing, fabric becomes exposed, stop buffing that area. Continue to buff around exposed fabric, as required.

(b) Lightly, hand buff damaged area using emery cloth (120 grit) (item 17, table 2-11).

(c) Clean buffed area using a piece of dean cheesecloth (item 16, table 2-11) dampened with acetone (item 3, table 2-11). Wear gloves (item 4, table 2-11).

(d) Brush coat buffed area with one coat of adhesive and allow to dry 20-60 minutes.

(e) Apply a second coat of adhesive to buffed area.

(f) Allow repair to remain undisturbed for at least 8 hours.

(5) Cuts, Tears, Chafing, Scuffs, or Snags Torn/Cut Fabric.

WARNING

Acetone and repair adhesives are flammable and toxic. Keep away from heat, sparks and open flame. Wear safety glasses, gloves and protective clothing to prevent contact. Wear a NIOSH approved air-purifying respirator for organic vapors and work in a well ventilated area. If contact occurs, flush areas with water and get medical attention. If ingestion occurs get medical attention at once.

NOTE

The adhesive should be used sparingly. Two (2) thin, even coats will provide better adhesion than two thick, puddled coats. Acetone is used as a solvent for the adhesive and, when the cemented surface appears dry to touch, it may be freshened or made tacky again by application of acetone.

(a) Wipe the damaged area and surrounding area on the damaged surface of the cell with a piece of dean cheesecloth (item 16, table 2-11) dampened with acetone (item 3, table 2-11) to remove any foreign material. The surface must be absolutely dean and dry in order to apply the patch.

(b) Cut a patch from the fabric (item 19, table 2-11 for interior repair, item 25, table 2-11 for exterior repair) for the repair area The patch should be 3 inches larger in all directions than the damaged area. Hand buff this material lightly and thoroughly on the gum side with emery cloth (120 grit) (item 17, table 2-11). Remove buffing dust by wiping patch with cheesecloth (item 16, table 2-11) dampened with acetone (item 3, table 2-11).

(c) Hand buff damaged area of cell lightly and thoroughly with emery cloth (120 grit) (item 17, table 2-11). Area to be buffed should be slightly larger (1/8 to 1/4 inch) in size than the patch. Remove buffing dust with a piece of dean cheesecloth (item 16, table 2-11) slightly dampened with acetone (item 3, table 2-11).

WARNING

Repair adhesive is flammable and should be kept away from any ignition source.

NOTE

Adhesive materials should be kept tightly sealed in individual containers in a cool, dry place.

(d) Refer to paragraph c(1)(e) for mixing instructions.

NOTE

Do not apply adhesive beyond buffed areas.

(e) Apply one coat of adhesive (item 18, table 2-11) to buffed side of patch and buffed area of cell, allow to dry 20-60 minutes.

NOTE

To determine if adhesive is tacky, test it by pressing a knuckle gently against the cemented surface and withdrawing it (it practical). Proper tackiness is achieved when a few threads of adhesive stick to the knuckle. This procedure is referred to as the knuckle test NOTE If adhesive dry times are exceeded, reapplication of one coat of adhesive may be done only once (total of three coats). If dry time is again exceeded, remove adhesive from applied area using, acetone and/or buffing with emery cloth (120 grit minimum).

(f) Apply a second coat of adhesive (item 18, table 2-11) to buffed areas of patch and cell, allow to dry until tacky. Adhesive can become tacky within 2 to 4 minutes, depending on ambient temperature and humidity. Perform knuckle test.

(g) If necessary to restore the tack of the cemented surfaces, use a dean piece of cheesecloth (item 16, table 2-11) dampened with acetone (item 3, table 2-11) and lightly wipe over cemented areas. Allow solvent to evaporate 10-20 seconds or until cemented areas become "tacky."

(h) While still tacky, apply patch to cemented area on the cell, centering patch over damaged area. With the one-inch roller (item 20, table 2-11) or similar tool, roll the patch to the cemented area and roll it down a 1/2 inch to 1 inch across at a time, so as not to trap air between the patch and cell.

(i) Place a 10 to 25 pound force by damping (C-damp (item 21, table 2-11) and two pieces of wood (item 22, table 2-11)), shot bag (item 23, table 2-11), etc., if practical on repair. Polyethylene, waxed paper (item 24, table 2-11) should be placed between the patch and force applying device to prevent sticking of the force applying device to the repair.

(j) Allow repair to remain undisturbed for at least 8 hours. The fuel cell should not be returned to service for 24 hours after a cold patch has been applied, which is the time required for the adhesive to become fully cured, at a temperature between 60°F to 80°F.

(k) Visually inspect repair for workmanship, no loose edges, no voids and adhesive fully cured. If there is a defect in repair, recement per above procedure.

(6) External and Internal Surface Hole Repair, Including Through Hole.

WARNING

Acetone and repair adhesives are flammable and toxic. Keep away from heat, sparks and open flame. Wear safety glasses, gloves and protective clothing to prevent contact. Wear a NIOSH approved air-purifying respirator for organic vapors and work in a well ventilated area. If contact occurs, flush areas with water and get medical attention. If ingestion occurs get medical attention at once.

(a) Clean innerliner of fuel cell at least 3 1/4 inches larger in all directions around hole. Use a piece of dean cheesecloth (item 16, table 2-11) dampened with acetone (item 3, table 2-11).

(b) Lightly, hand buff innerliner of fuel cell around hole using emery cloth (120 grit) (item 17, table 2-11), 3 1/4 inches in all directions.

(c) Clean buffed area. Use a piece of dean cheesecloth (item 16, table 2-11) dampened with acetone (item 3, table 2-11). The surface must be clean and dry in order to apply patch.

(d) Cut a patch from internal patch material fabric (item 19, table 2-11). The patch should be 3 inches larger in all directions around hole. Lightly, hand buff gum side (side with dull finish) of patch with emery cloth (item 17, table 2-11). Remove buffing dust by wiping patch with cheesecloth (item 16, table 2-11) dampened with acetone (item 3, table 2-11). Wear gloves (item 4, table 2-11).

WARNING

Repair adhesive is flammable and should be kept away from any ignition source.

NOTE

Adhesive materials should be kept tightly sealed in individual containers in a cool, dry place.

(e) Refer to paragraph c(1)(e) for mixing instructions.

NOTE

The adhesive should be used sparingly. Two (2) thin, even coats will provide better adhesion than two thick, puddled coats. Acetone is used as a solvent for the adhesive and, when the cemented surface appears dry to touch, it may be freshened or made tacky again by application of this solvent.

NOTE

Do not apply adhesive beyond buffed areas.

(f) Apply one coat of adhesive (item 18, table 2-11) to buffed side of patch and buffed area of cell innerliner, allow to dry 20-60 minutes.

NOTE

To determine if adhesive is tacky, test it by pressing a knuckle gently against the cemented surface and withdrawing it (if practical). Proper tackiness is achieved when a few threads of adhesive stick to the knuckle. This procedure is referred to as the knuckle test.

(g) Apply a second coat of adhesive (item 18, table 2-11) to buffed areas of patch and cell innerliner and allow to dry until tacky. Adhesive can become tacky within 2 to 4 minutes, depending on ambient temperature and humidity. Perform knuckle test.

NOTE

If adhesive dry times are exceeded, reapplication of one coat of adhesive may be done only once (total of three coats). If dry time is again exceeded, remove adhesive from applied area using, acetone and/or buffing with emery cloth (120 grit minimum).

(h) If necessary to restore tack of the cemented surfaces, use a piece of cheesecloth (item 16, table 2-11) dampened with acetone (item 3, table 2-11) and lightly wipe over cemented areas. Allow solvent to evaporate 10 to 20 seconds or until cemented areas become "tacky." Wear gloves (item 4, table 2-11).

(i) While adhesive is still tacky, apply patch to cemented area of the cell innerliner, centering patch over hole. With a one-inch, or smaller roller (item 20, table 2-11), roll the patch to the cemented area and roll it down a 1/2 inch to 1 inch across at a time so as not to trap air between patch and innerliner.

(j) For a hole penetrating the entire cell wall, follow steps (a) through (g) above for application of an external patch, except use fabric (item 25, table 2-11) patch material.

(*k)* Place a 10 to 25 pound force by damping (C-damp (item 21, table 2-11) and two pieces of wood (item 22, table 2-11)), shot bag (item 23, table 2-11), etc., if practical on repair. Polyethylene, waxed paper (item 24, table 2-11) should be placed between the patch and force applying device to prevent sticking of the force applying device to the repair.

(l) Allow repair to remain undisturbed for at least 8 hours. The fuel cell should not be returned to service for 24 hours after a cold patch has been applied, which is the time required for the adhesive to become fully cured, at a temperature between 60° F to 80° F.

(m) Visually inspect repair for workmanship, no loose edges, no voids and adhesive fully cured. If there is a defect in repair, recement per above procedure.

(7) Repair/Reattachment of Internal and External Support Hangers/Loops. Repair or reattachment of internal and external support hangers/loops shall be performed as follows:

WARNING

Acetone and repair adhesives are flammable and toxic. Keep away from heat, sparks and open flame. Wear safety glasses, gloves and protective clothing to prevent contact. Wear a NIOSH approved air-purifying respirator for organic vapors and work in a well ventilated area. If contact occurs, flush areas with water and get medical attention. If ingestion occurs get medical attention at once.

(a) Clean all bonding surfaces using a piece of dean cheesecloth (item 16, table 2-11) dampened with acetone (item 3, table 2-11). Wear gloves (item 4, table 2-11).

(b) Lightly hand buff surfaces to be bonded with emery cloth (120 grit) (item 17, table 2-11).

(c) Clean buffed areas using a piece of dean cheesecloth (item 16, table 2-11) dampened with acetone (item 3, table 2-11). Wear gloves (item 4, table 2-11). Allow cleaned areas to dry.

WARNING Repair adhesive is flammable and should be kept away from any ignition source.

NOTE

Adhesive materials should be kept tightly sealed in individual containers in a cool, dry place.

(d) Refer to paragraph c(1)(e) for mixing instructions.

(e) Apply one coat of adhesive (item 18, table 2-11) to buffed surface of hanger and buffed area of cell, allow to dry 20-60 minutes.

NOTE

To determine if adhesive is tacky, test it by pressing a knuckle gently against the cemented surface and withdrawing it (if practical). Proper tackiness is achieved when a few threads of adhesive stick to the knuckle. This procedure is referred to as the knuckle test.

(f) Apply a second coat of adhesive (item 18, table 2-11) to buffed areas of hanger and cell, allow to dry until tacky. Adhesive can become tacky within 2 to 4 minutes, depending on ambient temperature and humidity. Perform knuckle test.

NOTE

If adhesive dry times are exceeded, reapplication of one coat of adhesive may be done only once (total of three coats). if dry time is again exceeded, remove adhesive from applied area using, acetone and/or buffing with emery cloth (120 grit minimum).

(g) If necessary to restore tack to the cemented surfaces, use a piece of dean cheesecloth (item 16, table 2-11) dampened with acetone (item 3, table 2-11), lightly wipe over cemented areas. Allow solvent to evaporate 10 to 20 seconds or until cemented areas become 'tacky."

(h) With a one-inch or smaller roller (item 20, table 2-11), roll over hanger/loop to remove any trapped air.

(i) Allow repair to remain undisturbed for at least 8 hours. The fuel cell should not be returned to service for 24 hours.

(j) Visually inspect repair for workmanship, no loose edges, no voids, and adhesive fully cured. If there is a defect in repair, recement per above procedure.

(8) Fitting Rework

(a) Fittings having surface corrosion and/or scratches, within allowable limits, can be reworked in accordance with the following procedures.

WARNING

Wear rubber gloves and eye protection throughout fitting rework procedure, except when using emery cloth and Scotchbrite pad.

(b) Rework fitting as follows:

1 If there is a heavy accumulation of grease, oil or dirt, or if the metal is severely corroded, dean with a piece of dean cheesecloth (item 16, table 2-11) dampened with acetone (item 3, table 2-11). If acetone does not completely clean fitting or acetone beads up, clean fitting with a commercial cleaner (i.e. Ajax) (item 26, table 2-11).

2 After cleaning, wipe or rinse cleaning agent(s) from fuel cell fitting and surrounding area with water.

3 Immediately prior to rework, wipe all contaminants from the fitting using a clean piece of cheesecloth (item 16, table 2-11) dampened with acetone (item 3, table 2-11).

CAUTION

Metal applicators, cleaning devices or materials shall not be used under any circumstances in this procedure.

4 If metal is severely corroded and/or there are scratches or gouges, buff with emery cloth (120 grit) (item 17, table 2-11) until surface is free of corrosion, scratches and/or gouges.

5 Using fine emery cloth (300 grit) (item 13, table 2-11), sand/polish surface previously buffed with 120 grit emery cloth (item 17, table 2-11) until surface is smooth and free of buffing scratches.

6 Remove any exposed surface corrosion which lies above the normal metal surface or which appears loose or powdery by rubbing with a Scotchbrite pad (item 12, table 2-11).

7 Wipe off residue with a piece of dean cheesecloth (item 16, table 2-11) dampened with acetone (item 3, table 2-11).

WARNING

When working with Alodine 1200 wear gloves, safety goggles, and protective clothing. Wear a NIOSH approved respirator. If contact occurs, flush with water and get medical attention.

CAUTION

If artist's brush has metal bristle retainer, wrap the retainer with two layers of masking tape so all of the retainer is covered.

8 Apply, brush Alodine 1200 coating (item 14, table 2-11) liberally to the metal surface using artist brush (item 15, table 2-11) or equivalent and allow to stand one (1) minute.

9 Apply additional coats of Alodine 1200 (item 14, table 2-11) at one (1) minute intervals until a light gold or tan color appears. No more than five (5) coats are required for coating formation. If no coating occurs, reclean the surface and reapply Alodine 1200 (item 14, table 2-11).

CAUTION

Wash the brush thoroughly in water immediately after use, as the Alodine 1200 will attack the bristles.

10 Rush the work area thoroughly with distilled water (item 11, table 2-11) followed by wiping with a clean piece of dean cheesecloth (item 16, table 2-11).

Table 2-11. Expendable/Durable Supplies and Materials List

(1) ITEM NUMBER	(2) LEVEL	(3) NATIONAL STOCK NUMBER	(4) DESCRIPTION	(5) UNIT OF MEASURE U/M
1	F	8040-01-129-2559	Adhesive P/N 82C18	PT
2	F	8040-01-129-2558	Adhesive P/N 82C12	PT
3	F	6810-00-184-4796	Acetone, Technical O-A-51 (81348)	GL
4	F	8415-00-2668677	Gloves, Chemical Protective ZZ-G-381 (81348)	EA
5	F	6515-00-753-4533	Tongue Depressor GG-D-226 (81348)	EA
6	F	7920-00-514-2417	Brush, Acid Swabbing A-A-289 (58536)	EA
7	F	9330-01-434-0772	Plastic Material, Interior and Exterior P/N 3629N (56221)	YD
8	F	9330-01-434-7186	Plastic Material PIN 3603N (56221)	YD

Table 2-11. Expendable/Durable Supplies and Materials List (Continued)

(1) ITEM NUMBER	(2) LEVEL	(3) NATIONAL STOCK NUMBER	(4) DESCRIPTION	(5) UNIT OF MEASURE U/M
9	F	7510-00-280-1525	Pencil, Wax, Marking P/N A-A-87B Type I, White (58536)	DZ
10	F	7510-00-079-7906	Tape, Pressure Sensitive ASTM D54861D5486M (81346)	RO
11	F	6840-00-356-4936	Distilled-Deionized, Water D1193 (81346)	BT
12	F	7920-00-753-5242	Pad, Scouring Scotchbrite 96 (27293)	EA
13	F	5350-00-584-4654	Cloth, Abrasive (300 Grit) A-A-1 049 (58536)	EA
14	F	8030-00-057-2354	Coating, Chemical, Corrosion Resistant (Alodine) 1200S (84063)	OZ
15	F	8020-01-200-6318	Brush, Artist HB118TYPEISIZE20 (81348)	EA
16	F	8305-00-205-3496	Cheesecloth A-A-1 491 (58536)	PK
17	F	5350-00-865-5688	Cloth, Abrasive (120 Grit) ANSI B74-18 (80204)	EA
18	F		Adhesive P/N PU-459 22-20556 (05476) (6 Mo. Shelf Life) 22-20555 (05476) (12 Mo. Shelf Life)	EA
19	F	9330-01-434-0777	Plastic Material (Fabric) PS-625 (05476)	YD
20	F	5120-00-958-0682	Roller 1 Inch 3065-697-4 (73842)	EA
21	F		C-Clamp	EA
22	F		Wood	EA

Table 2-11. Expendable/Durable Supplies and Materials List (Continued)

(1) ITEM NUMBER	(2) LEVEL	(3) NATIONAL STOCK NUMBER	(4) DESCRIPTION	(5) UNIT OF MEASURE U/M
23	F		Shot Bag	EA
24	F	8135-00-264-3826	Paper, Wrapping Waxed	RO
25	F		Fabric U5204 (05476)	YD
26	F	7930-00-721-8592	Scouring Powder (AJAX) A-A-269 (58536)	CN

CHAPTER 3
OIL SYSTEMS

3-1. General. The oil system supplies oil to the aircraft engine for lubrication. Oil systems will be serviced with the specification and grade of oil listed in the specific aircraft maintenance publication. Do not allow oil to become contaminated through careless handling, use of dirty oil containers or equipment, or entry of foreign material through openings of the crankcase. Identification, contamination, and general maintenance practices will be covered in this chapter.

3-2. Safety Precautions and Procedures. The following warnings and caution will be followed when working with aircraft oils and oil systems.

WARNING

- **Lubricating oil, MIL-L-7808 or MIL-L-23699, contains an additive which is poisonous and absorbed readily through the skin. Do not allow oil to remain on skin any longer than necessary.**
- **Oil is a skin irritant. If oil gets on skin, wash thoroughly. If oil soaks into clothes, change clothes immediately.**
- **Oil gives off fumes that can cause injury to personnel. Use oil in a well-ventilated area.**

CAUTION

Oil can soften paint. If oil drips on painted surface of aircraft, wipe up immediately with clean cloths.

3-3. Types of Oils. Mineral fluid lubricants are used as the principal lubricant in all types of internal-combustion engines. They can be pumped easily and sprayed readily. They also dissipate heat quickly and provide a good cushioning effect. Synthetic lubricants are used in turbine engines because of the high temperatures that are developed. Synthetic lubricants are not made from natural crude oils which would breakdown under high temperatures.

3-4. Identification of Oils. Identification of oils for both reciprocating and turbine engines are explained in the following paragraphs.

a. Reciprocating Engines. Standard oil for reciprocating engines are specified in table 3-1.

b. Turbine Engines. Turbine engines require oils which have a lower pour point, or better viscosity temperature characteristics, and a higher degree of resistance to oxidation or thermal decomposition than petroleum derived oils. The oils in table 3-2 are the synthetic oils which meet these requirements and are commonly used by turbine engines.

(1) *Turbine engine oil MIL-L-23699*. This oil has a greater life than MIL-L-7808 and has generally replaced MIL-L-7808 in the temperature ranges shown in figure 3-1. This is recommended oil for all new and overhauled turbine engines.

(2) *Turbine engine oil MIL-L-7808*. This oil is used in extreme low temperature ranges, as shown in figure 3-1.

(3) *Color identification.* There is no easy way to look at oil and tell the difference between the two types of oil. The only way to determine which type of oil is in an engine is by careful maintenance of servicing records.

(4) *Compatibility*. MIL-L-7808 and MIL-L23699 oils are required by specifications to be compatible with each other. However, adding MIL-L-7808 oil to a system which has been converted to MIL-L-23699 should be avoided, if possible, since the addition of MIL-L-7808 oil will lower the concentration of MIL-L-23699 oil and thus will tend to nullify the benefits derived from the MIL-L-23699 oil. In addition, indiscriminate mixing of the two oils may result in result in pressures and flow limits different from the published values for either oil. When operating conditions necessitate reservicing with MIL-L-7808, the system or components should be drained and reserviced as soon as MIL-L-23699 oil is available.

3-5. Oil Contamination. Oil is exposed to many harmful substances which reduce the ability of the oil to protect moving parts. The main contaminants are gasoline, moisture, acids, dirt, carbon, and metallic particles. Because of these contaminants, the oil must be changed at regular intervals according to the applicable maintenance manuals.

Table 3-1. Reciprocating Engine Oils

U.S. Military Specification	National stock number	NATO number
MIL-L-22851, Type II	9150-00-168-6889	0-128
MIL-L-22851, Type III	9150-00-019-5701	0-123

Table 3-2. Turbine Engine Oils

U.S. Military Specification	National stock number	NATO number
MIL-L-23699	9150-00-985-7099	0-156
MIL-L-7808	9150-00-782-2627	0-148

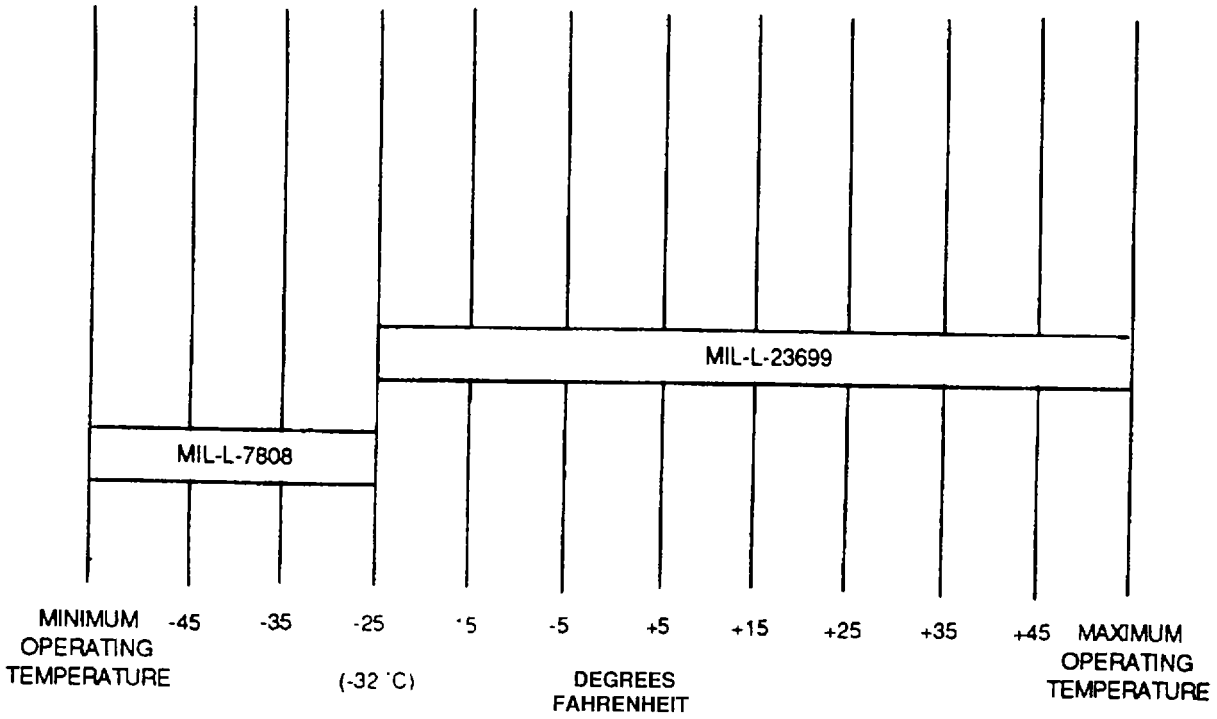

Figure 3-1. Turbine Engine Oil Use Temperature Chart

a. Water. When operating aircraft at temperatures below freezing, or when temperature may drop below the freezing point, open the oil tank sump drains sufficiently to drain off any accumulation of water.

b. Solids. Carbon and metallic particles are the two most common types of solid contaminants.

(1) Carbon. Frequently, carbon breaks loose from the interior of the engine in large pieces which have the outward appearance of metal. However, carbon can be distinguished from metal by placing the foreign material on a flat metal object and hitting with a hammer. If material is carbon, it will disintegrate when struck with a hammer, whereas metal will either remain intact or change shape, depending upon its malleability.

NOTE

The information in the following paragraph is not intended to be a substitute for, nor release from, the requirement for compliance with the Army Oil Analysis Program (AOAP) directed in accordance with TB 43-0106.

(2) Metallic Particles. Metal particles found in an engine may be of five kinds: steel, tin, aluminum, silver, and copper (or bronze). A visual inspection as to color and hardness will occasionally be sufficient to determine the kind of metal present When visual inspection does not positively identify the metal, the kind of metal present may be determined by a few simple tests performed with a permanent magnet, electric soldering iron, and approximately 2 ounces each of hydrochloric acid and nitric acid as follows:

(a) *Steel particles*. Steel particles can be isolated by means of a permanent magnet.

(b) *Tin particles*. Tin particles can be identified by their low melting point. A soldering iron should be cleaned, heated to approximately 500 °F (260 °C), and tinned with 50-50 solder (50% lead to 50% tin). Wipe off excess solder. A tin particle dropped on heated iron will melt and fuse with the solder. Take care to avoid excessive overheating of iron during this test

Exercise care in handling acid. Acid can bum if splashed on skin.

(c) *Aluminum particles.* Aluminum particles may be identified by their respective reaction with hydrochloric acid. When a particle of aluminum is dropped into hydrochloric acid it will fizz with a rapid emission of bubbles. The particle will gradually disintegrate and form a black residue (aluminum chloride).

(d) Silver and copper. Silver and copper (or bronze) may be identified by their respective reactions in nitric acid. When a silver particle is dropped into nitric acid, it will react rather slowly, producing a whitish fog in the acid. When a particle of copper (or bronze) is dropped into nitric acid it will react rapidly, producing a bright green cloud in the acid. There is no need in this instance to separate copper from bronze.

c. Prevention. Care should be taken in the servicing and maintenance of oil systems to prevent contamination. The oil tank filler cap must be installed correctly and locked in place. Oil should be drained, inspected, and changed to ensure a dean supply of oil for the engine.

d. DELETED.

3-6. Oil System Maintenance. Oil System types and general oil system component maintenance are explained in the following paragraphs.

a. Types, Wet-sump and dry-sump oil systems are used in reciprocating and turbine engine aircraft for lubrication.

(1) *Reciprocating engines.* Reciprocating engines use both wet-sump and dry-sump systems to lubricate internal moving parts.

(a) *Wet-sump*. This system consists of a sump or pan in which the lubricating oil is contained. The oil is drawn from the sump to lubricate the engine by an oil pressure pump. After lubricating the various units on which it sprays, the oil drains back into the sump and the cycle is repeated. Figure 3-2 shows a typical wet-sump system.

- The main disadvantages are: · The oil supply is limited by the sump (oil pan) capacity.
- Provisions for cooling the oil are difficult to arrange because the system is a self-contained unit.
- Oil temperatures are likely to be higher on large engines because the oil supply is so dose to the engine and is continuously subjected to the operating temperatures.

- The system is not readily adaptable to inverted flying since the entire oil supply will flood the engine.

(b) *Dry-sump.* The oil supply in this type of system is carried in a tank. A pressure pump circulates the oil through the engine and scavenger pumps return it to the tank, as shown in figure 3-3.

(2) *Turbine engines.* Turbine engines use both wet-sump and dry sump systems for lubrication. Each type is explained in the following paragraphs.

(a) *Wet-sump.* Wet-sump engines store the lubricating oil in the engine proper, either in the accessory gearcase, or a sump mounted on the bottom of the accessory case. Figure 3-4 turbine engines.

(b) *Dry-Sump.* Dry-sump engines store the lubricating oil in a tank mounted on the engine. The pressure system, as shown in figure 3-5, supplies oil to the accessory drives. The scavenger system returns the oil to the engine oil tank which usually is mounted on the compressor case. It is connected to the inlet side of the pressure oil pump and completes the oil flow cycle. A breather system connecting the individual bearing compartments and the oil tank with the breather pressurizing valve completes the engine lubrication system.

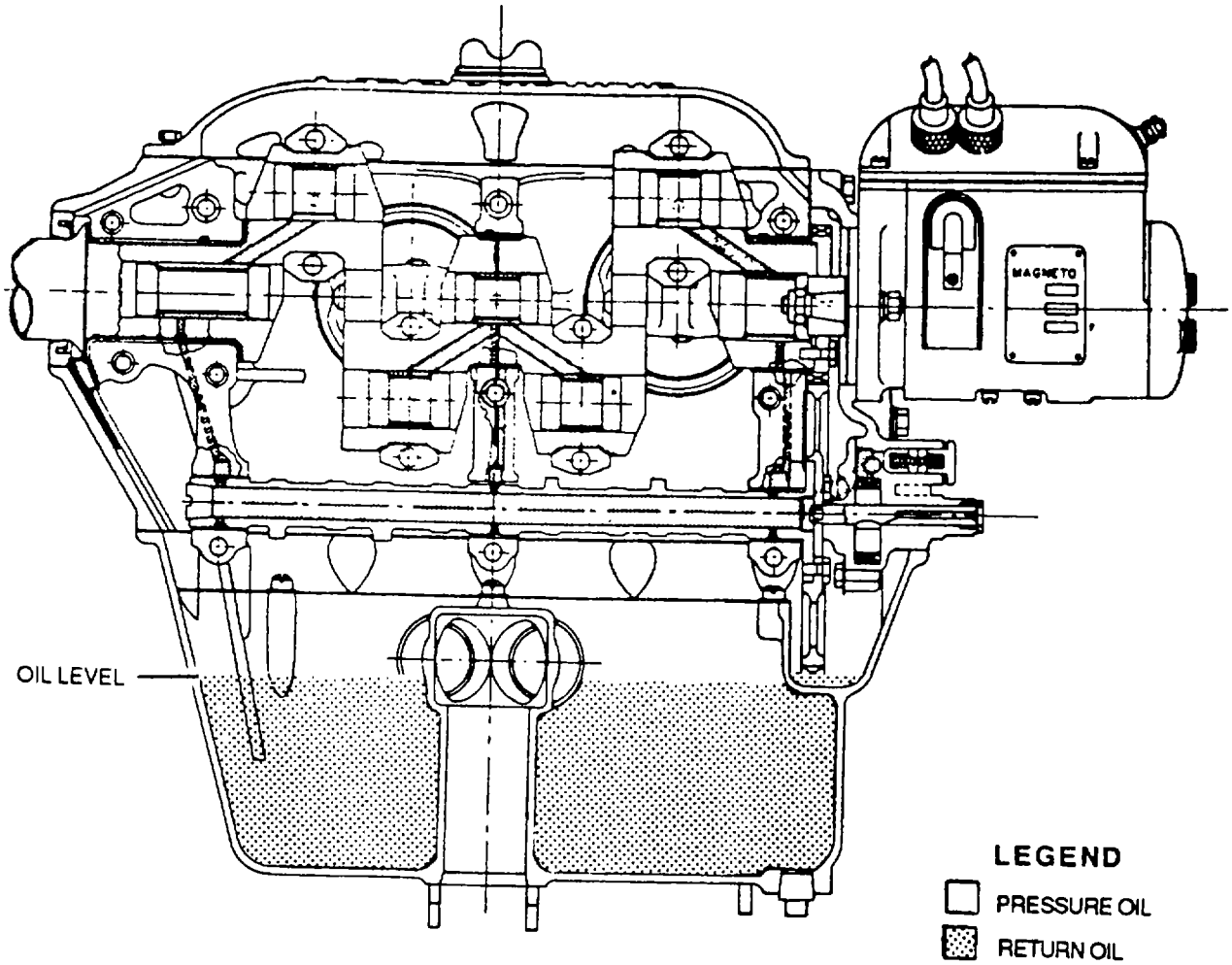

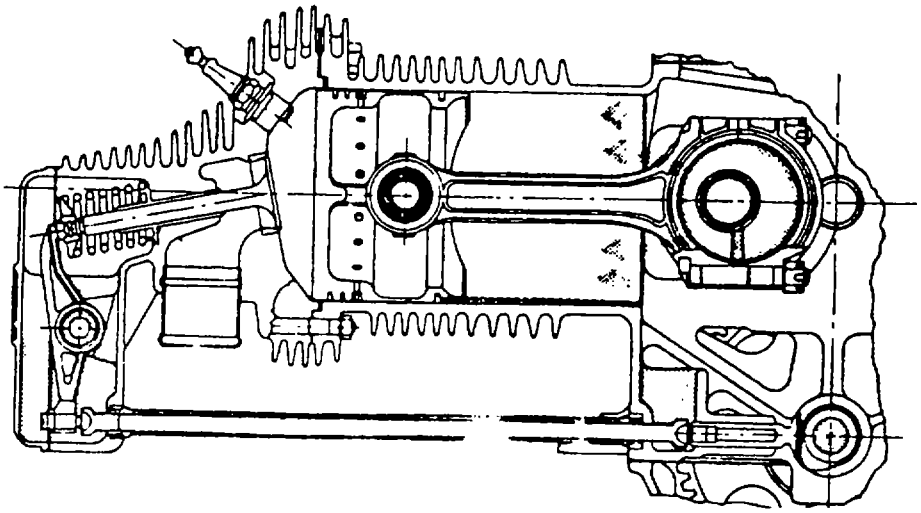

Figure 3-2. Wet-Sump Lubrication System for Reciprocating Engines

b. Oil Lines. Rigid tubing, flexible hose, and fittings are used throughout the oil system, for the purpose indicated by their nomenclature to connect a component into a system, or to connect one component to another to complete a system.

(1) *Removal*. All tubing, hose, and fittings are removed and installed similarly. Any peculiarity of removal or installation procedures will be determined by the physical construction and the manner in which the part is used. The following are general procedures for removing oil lines.

(a) During removal, rotate coupling nut of tubing or hose with one wrench while holding fitting to which it is secured with another wrench. This procedure prevents twisting of the tubing or hose.

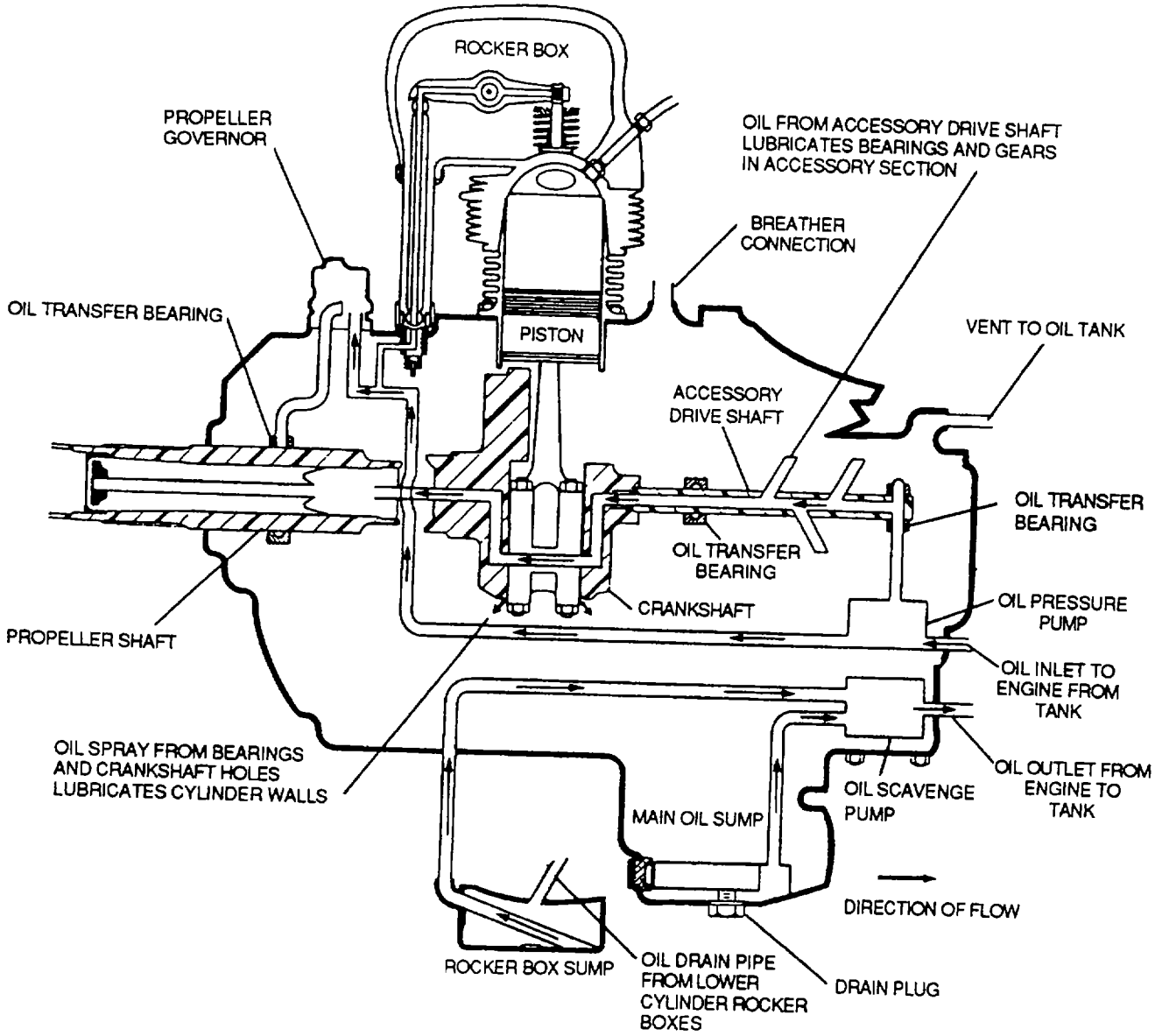

Figure 3-3. Dry-Sump Lubrication System for Reciprocating Engines

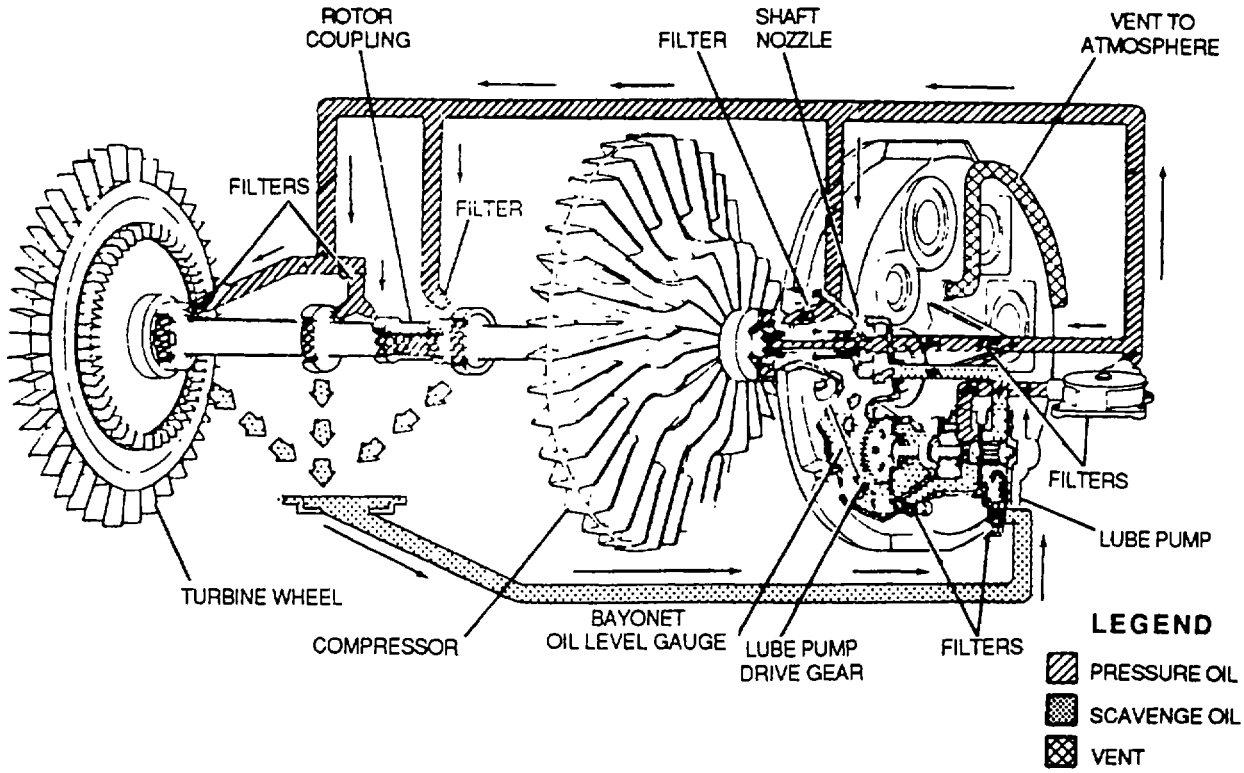

Figure 3-4. Wet-Sump Lubrication System for Turbine Engines

(b) After removing tubing or hose, cap or plug ends to prevent entry of foreign material; also plug or cap fitting from which tubing or hose was removed for the same reason.

(c) Remove fittings from tubing, hose, or components with the correct size wrench to prevent malforming the fittings.

WARNING

- **Drycleaning solvent is flammable and solvent vapors are toxic. Use P-D-680, Type II Solvent in a well-ventilated area. Keep away from open flames. Avoid prolonged solvent contact with skin.**

- **When using air pressure, be extremely careful. Do not blow stream of air toward yourself or any other person. Users of air pressure and personnel within the immediate area shall wear safety glasses, goggles, or face shield. Ear protection may be required. Pressure will not exceed 30 psig. Failure to comply may result in injury.**

(2) Cleaning. Clean removed tubing, hose, and fittings by blushing or submerging in drycleaning solvent P-D-680, Type II, and dry with clean, dry, compressed air.

(3) Inspection. Inspect tubes, hoses, and fittings as follows:

(a) Inspect hose for chafing, fraying, and cuts, deterioration, cold flow, weather checking, and excessive wire damage (braided wire covered).

(b) Inspect tubing for chafing, cracks, and corrosion.

(c) Inspect oil line fittings for malformed threads, cracks, and general condition.

(4) Installation. During installation, rotate coupling nut of tubing or hose with one wrench while holding fitting to which it is being secured with another wrench. This procedure prevents twisting of the tubing or hose. Oil lines shall be secured with metal clamps having an oil-resistant cushion, in such a manner as to ensure 1/4 inch minimum clearance between tubing and

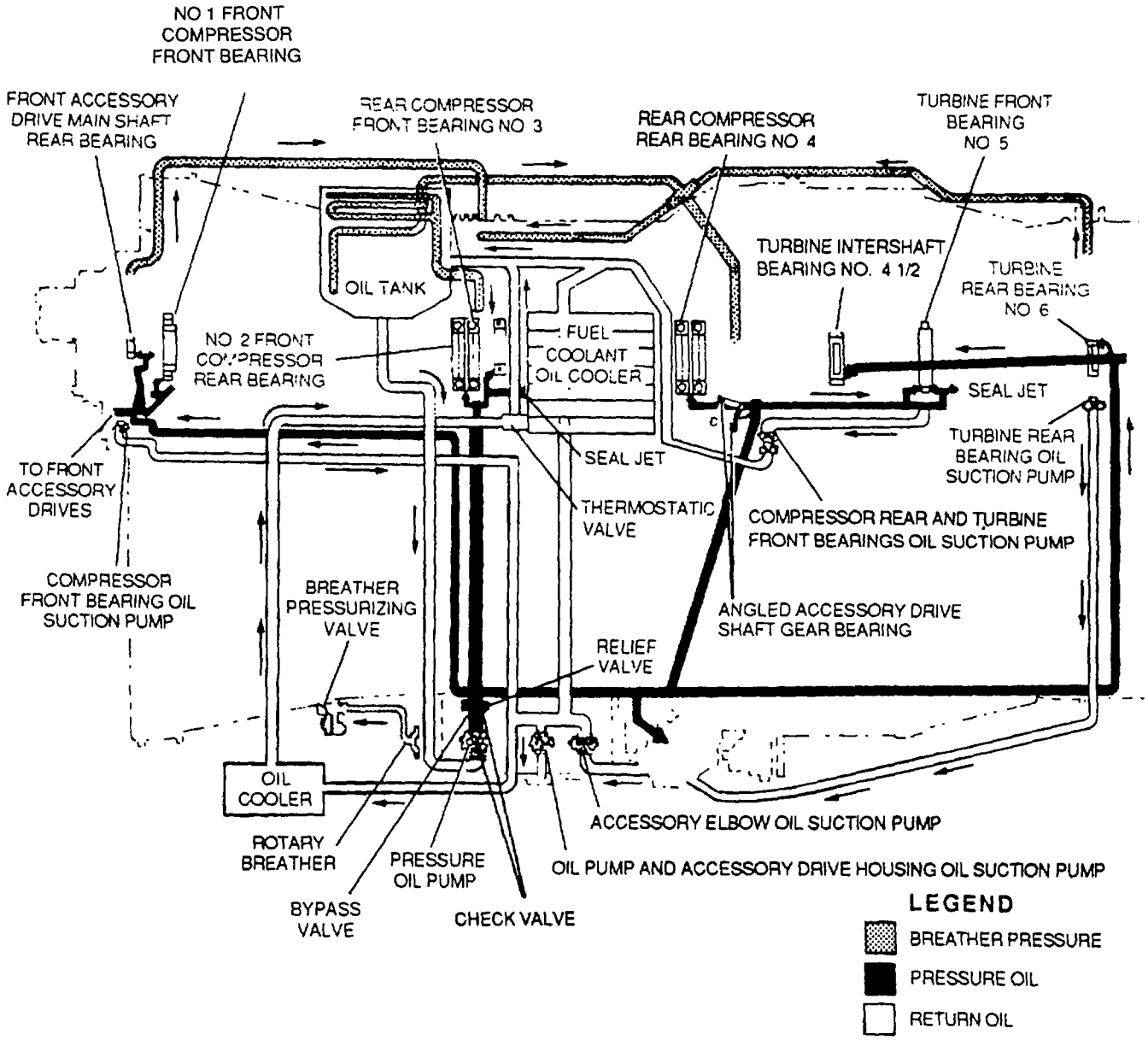

Figure 3-5. Dry-Sump Lubrication System for Turbine Engines

aircraft structure to prevent chafing. Clamps shall be installed so that weight of line will tend to tighten the attaching hardware.

(5) Fabrication. For fabrication of oil lines, refer to TM 1-1500-204-23-2.

c. Oil Filters. Oil filters remove foreign particles that may be in the oil. Oil filter types and general maintenance are explained in the following paragraphs.

(1) *Types.* There are several types of filters used for filtering the lubricating oil. The most common types for reciprocating and turbine engines are explained in the following paragraphs.

(a) *Reciprocating engines.* The most common types of oil filters are the screen, Cuno and Air-maze.

WARNING

Drycleaning solvent is flammable and solvent vapors are toxic. Use P-D-680, Type II Solvent in a well-ventilated area. Keep away from open flames. Avoid prolonged solvent contact with skin.

1 *Screen-type.* The screen-type, as shown in figure 3-6, with its double-walled construction, provides a large filtering area in a compact unit. As oil passes through the fine-mesh screen, dirt, sediment, and other foreign matter are removed and settle to the bottom of the housing. At regular intervals, the cover is removed and the screen and housing cleaned with a drycleaning solvent, P-D-680, Type II.

2 *Cuno-type.* The Cuno oil filter has a cartridge made of disks and spacers. A cleaner blade fits between each pair of disks. The cleaner blades are stationary, but the disks rotate when the shaft is turned. Oil from the pump enters the cartridge well that surrounds the cartridge and passes through the spaces between the closely spaced disks of the cartridge, then through the hollow center, and on to the engine. Any foreign particles in the oil are deposited on the outer surface of the cartridge. When the cartridge is rotated, the cleaner blades comb the foreign matter from the disks. The cartridge of the manually-operated Cuno filter is turned by an external handle. Automatic Cuno filters have a hydraulic motor build into the filter head. This motor, operated by engine oil pressure, rotates the cartridge whenever the engine is running. There is a manual turning nut on the automatic Cuno filter for rotating the cartridge manually during inspections.

3 Air-maze-type. The Air-maze filter contains a series of round, fine-meshed screens mounted on a hollow shaft. The oil from the pump enters the well, surrounds the screens, and then passes through them and the shaft before entering the engine. The carbon deposits that collect on the screens actually improve their filtering efficiency.

(b) *Turbine engines.* Filters are an important part of the lubrication system, since they remove foreign particles that may be in the oil. This is particularly important in gas turbines, as very high engine speeds are attained, and the antifriction types of ball and roller bearings would become damaged quite rapidly if lubricated with contaminated oil. Also, there are usually a number of drilled or core passages leading to various points of lubrication Since these passages are usually rather small, they are easily clogged. The spacers and screens and main oil strainer are explained in the following paragraphs.

1 *Spacers and screens*. This filter, as shown in figure 3-7, is made up of a stack of metal disks covered with a screen and separated by spacers so that the oil can flow through the screens and out the outlet port of the strainer body.

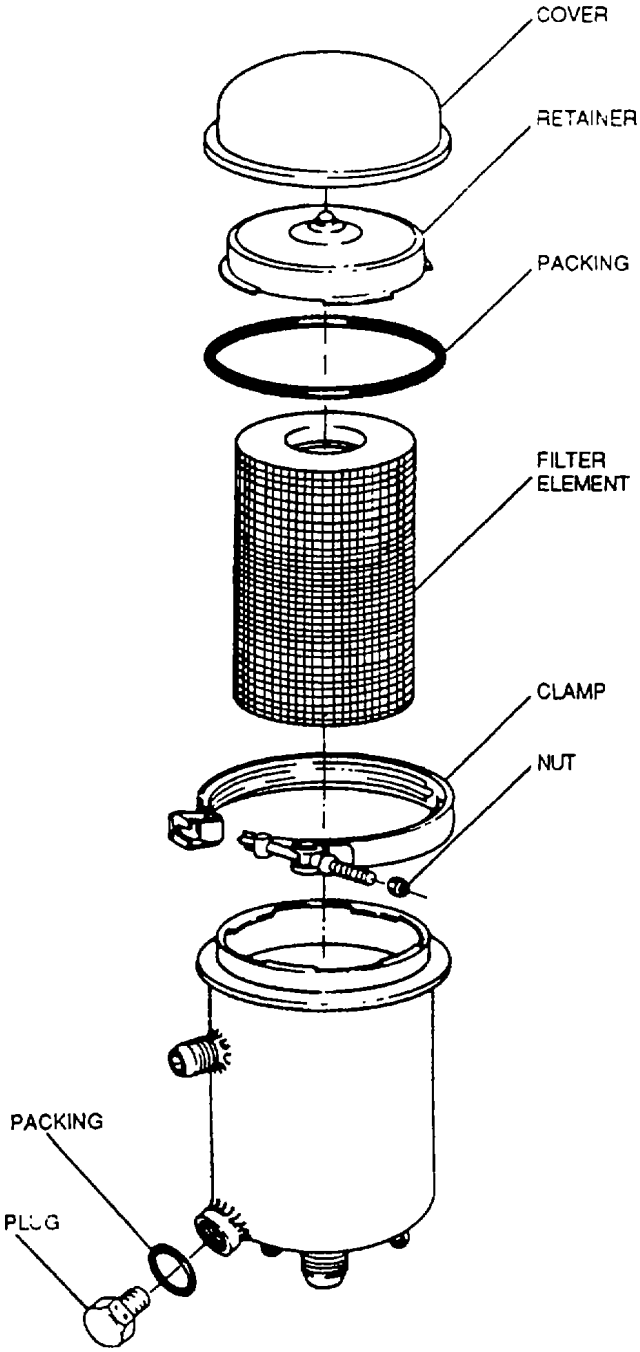

Figure 3-6. Oil Filter

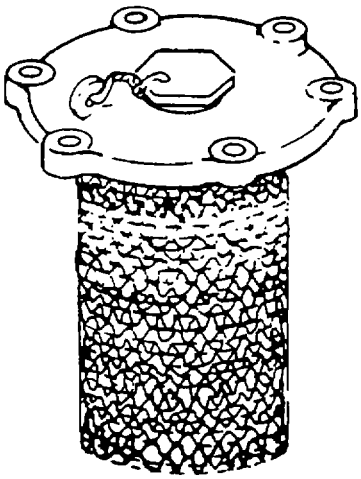

Figure 3-7. Spacers and Screens Oil Filter

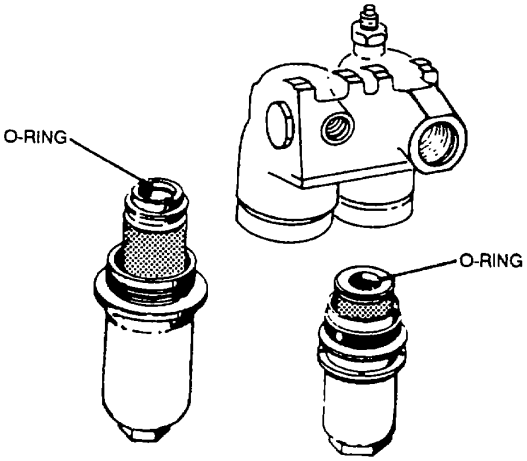

Figure 3-8. Main Oil Strainer

2 *Main oil strainer.* Another type of filter, used as a main oil strainer, is shown in figure 3-8. The filtering element interior is made of stainless steel.

(2) *Maintenance.* The oil filter should be removed, disassembled, inspected, cleaned, and reinstalled at regular intervals in accordance with the applicable maintenance manual.

(a) *Removal.* The following are general procedures for removing oil filters:

1 Provide a suitable container for collecting the drained oil.

2 Remove the filter cover and withdraw the filter assembly. Discard the old seal.

3 Install the oil filter assembly in a holding fixture. Remove the plug from the filter cover and discard the lockwire. The filter must be installed in a proper fixture before removing the cover plug to prevent the stacked screens and spacers from flying off under their spring tension.

4 Carefully remove the filter cover from the fixture, then slide the screens and spacers onto a suitable cleaning rod, keeping them in their proper order. The parts should not be able to slide off the rod during the cleaning operation.

(b) *Inspection*. Separate the screens and spacers by sliding the parts along the rod. Examine the screens and spacers by sliding the parts along the rod. Examine the screens and spacers for foreign matter that would indicate an unsatisfactory condition in the engine.

WARNING

Drycleaning solvent is flammable and solvent vapors are toxic. Use P-D-680, Type II Solvent in a well-ventilated area. Keep away from open flames. Avoid prolonged solvent contact with skin.

(c) Cleaning. Clean filters by immersing in drycleaning solvent, Federal Specification P-D-680. Do not use a hard-edged or pointed tool to scrape or pick at filter. Do not use an air blast for cleaning, as compressed air will tend to drive dirt into filter parts. Immediately after washing and prior to reinstallation, dip filter into clean engine oil.

(d) Installation. The following are general procedures for installing oil filters:

1 Assemble the filter spacers and screens on the baffle, using the holding fixture. Make certain that

an outlet spacer will be at both ends. Also, make sure each screen is located between an outlet spacer and an inlet spacer.

2 Install the outer end plate on the screen and spacer buildup; then install the cover on the end plate.

3 Place a new seal on the cover plug and install the plug in the threaded end of the baffle. The plug must be tightened to the torque prescribed in the manufacturer's instructions so that the spacers and screens cannot be rotated by hand.

4 Secure the cover plug with lockwire. Then remove the filter assembly from the holding fixture.

d. Oil Screens. Oil screens, as shown in figure 3-9, accumulate the sludge during engine operation. These screens must be removed, inspected, cleaned, and reinstalled at regular intervals according to applicable maintenance manuals. General maintenance procedures are covered in the following paragraphs.

(1) *Removal*. Remove and discard the safety devices and loosen the oil screen housing or cover plate. Be sure to use a suitable clean container to collect the oil that will drain from the filter housing.

NOTE

The container must be clean so that the oil collected can be examined for foreign particles. Any contamination already present will give a false indication of engine condition.

(2) *Inspection.* Inspect screens for contamination and for the presence of metal particles. Metal particles may indicate internal engine failure.

WARNING

Drycleaning solvent is flammable and solvent vapors are toxic. Use P-D-680, Type II Solvent in a well-ventilated area. Keep away from open flames. Avoid prolonged solvent contact with skin.

When using air pressure, be extremely careful. Do not blow stream of air toward yourself or any other person. Users of air pressure and personnel within the immediate area shall wear safety glasses, goggles, or face shield. Ear protection may be required. Pressure will not exceed 30 psig. Failure to comply may result in injury.

(3) *Cleaning*. Clean oil screens by immersing in drycleaning solvent, Federal Specification P-D-680, and washing with a soft bristled brush. Do not use a hard-edged or pointed tool to scrape or pick at screen. Using a light air blast, blow out residual dirt and fluid. When heavy carbon deposits adhere to screen, immerse screen in trichloroethylene, Federal Specification 0-T-634, at room temperature. Dry with a light air blast.

(4) *Installation*. Reinstall the filter using new O-rings and gaskets. Tighten housing or cover retaining nuts to the torque value specified in the applicable maintenance manual and safety as required.

e. Oil Tanks. Oil tank description and general maintenance procedures are explained in the following paragraphs.

(1) *Description*. Oil tanks are generally constructed of an aluminum alloy. The tank is usually placed close to the engine and high enough above the oil pump inlet to ensure gravity feed. The tank filler neck is positioned to provide sufficient room for oil expansion and for foam to collect. Some oil tanks have a built-in hopper, or temperature accelerating well, that extends from the oil return fitting on top of the oil tank to the outlet fitting in the sump in the bottom of the tank.

(2) *Maintenance*. General inspection and repair procedures are explained in the following paragraphs.

(a) *Inspection*. Inspect the condition of attaching straps or other devices used to secure the tank in place, the condition of the seams and walls, signs of leakage, and the security of the attached plumbing.

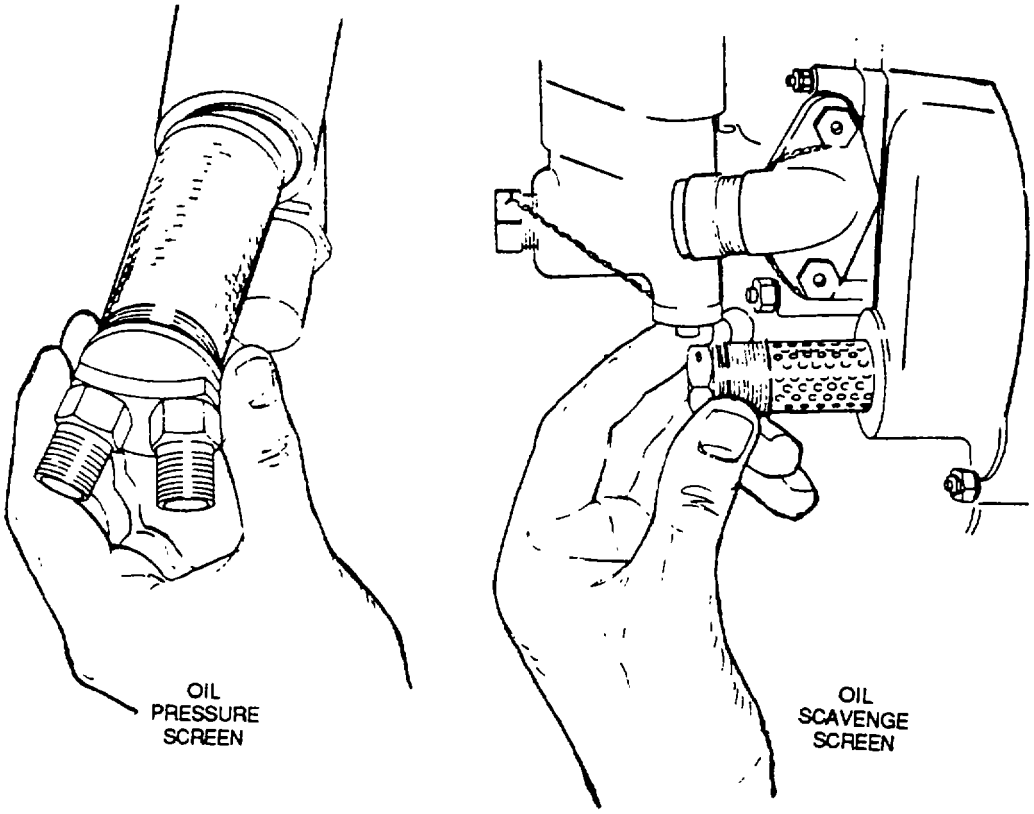

Figure 3-9. Oil Screen Types

(b) *Repair procedures*. Repair usually requires tank removal. Remove tank as follows:

1 Drain oil.

2 Disconnect oil lines, drain hoses, and bonding wire.

3 Remove securing straps or other securing devices.

4 Lift tank out and repair in accordance with applicable maintenance manuals.

5 Reinstall by reversing the sequence of oil tank removal.

6 Refill tank with oil.

(c) *Repair of self-sealing oil cells*. Self-sealing oil cells are repaired in the same way as fuel cells; however, greater care must be taken in cleaning the cells in preparation for repair work. Refer to applicable maintenance manual.

f. Magnetic Plugs and Chip Detectors. A magnetic plug consists of a threaded plug containing a magnetic air gap to attract and hold ferrous particles. A chip detector consists of a magnetic air gap with an electrical connection such that electrical continuity is established and a warning light comes on in the cockpit when the particles bridge the gap. The magnetic pole piece and electrical connection may be an integral part of the threaded plug or may be a bayonet type with a removable center insert and a self-closing valve body so that the center insert can be removed and inspected without draining the oil, or oil can be drained without unscrewing the threaded plug (valve body). Inspect and test magnetic plugs and chip detectors whenever they are removed for any reason.

CAUTION

Improper or rough handling of magnetic plugs, chip detectors and their electrical connections and wiring is the major cause of no warning or false indications.

(1) *Removal of magnetic plugs* and one-piece chip detectors. Remove and discard lockwire and unscrew plug, draining the oil.

NOTE

For chip detectors, first disconnect the electrical connector.

(2) *Removal of two-piece chip detectors*. Disconnect electrical connector from the detector. Press removable center insert in, turn counterclockwise and remove from the valve body. To remove valve body when necessary, cut lockwire and unscrew, draining the oil.

(3) *Inspection.* When removing plug or detector, care must be taken not to contaminate the magnetic gap. Visually check the gap for metal accumulation. The metal deposits may be chips, flakes, and splinters, or in a granular form. Presence of metal may indicate need for further investigation and corrective action; refer to applicable maintenance manual.

WARNING

Drycleaning solvent is flammable and solvent vapors are toxic. Use P-D-680 Type II Solvent in a well-ventilated area. Keep away from open flames. Avoid prolonged solvent contact with skin.

(4) *Cleaning*. Clean magnetic plug or chip detector with drycleaning solvent P-D-680, Type I, or as specified in the aircraft maintenance manual. Then wipe with a clean lint-free cloth.

(5) *Test.* Prior to testing, visually check plug body for worn, stripped or damaged threads, and bayonet features as applicable. Replace as required. If leakage was observed prior to removal of the center insert of a chip detector of this type, or the still installed valve body leaks, replace with new seals or chip detector as necessary. Inspect plug or detector magnet and gap. If deformed, or magnet is chipped or cracked, replace with a new unit. Test procedures are provided in the following paragraphs.

(a) Magnetic ability test. Use a standard steel paper clip, or equivalent, placed across the magnetic gap. If test piece is held in place, the plug or detector is satisfactory for use. If the test piece is not held in place, replace plug or detector with a new one.

NOTE

Make certain that test piece is not magnetized.

(b) *Electrical test*. This test is to check chip detectors and aircraft wiring. Test procedures are as follows:

1 Connect detector to aircraft wiring.

2 Ground body of detector to aircraft.

3 Apply power.

4 Warning light should not illuminate. If light comes on, break ground between body and aircraft. If light continues to burn, wiring is faulty. If light goes out, replace chip detector.

5 If warning light does not come on, then temporarily place test piece across magnetic gap. The light should come on. If light does not come on, recheck bridging connection and ground connection. If light still does not come on check circuit wiring and components, including the light.

(6) *Installation for magnetic plugs and chip detectors without center insert.* Replace seal if damaged or deteriorated, screw plug in and torque as specified in the applicable maintenance manual and then lockwire. For chip detector, connect electrical lead.

(7) *Installation for chip detectors with removable center insert.* Replace seals it damaged or deteriorated. Position insert in plug, plug in, and turn clockwise to lock in place. Attach or check electrical connection. Refer to applicable maintenance manual.

g. Oil Coolers. Oil cooler types and general maintenance procedures are explained in the following paragraphs.

(1) *Reciprocating engine oil coolers*. This oil cooler, as shown in figure 3-10, is either cylindrical or elliptical in shape. It usually consists of a core enclosed in a double-walled shell. The core is built of copper or aluminum tubes. Cooling air passes through the tubes while the oil flows around the outside of the tubes. This cools the oil for return to the engine. A bypass route is followed by the oil when the core is blocked or oil is cold.

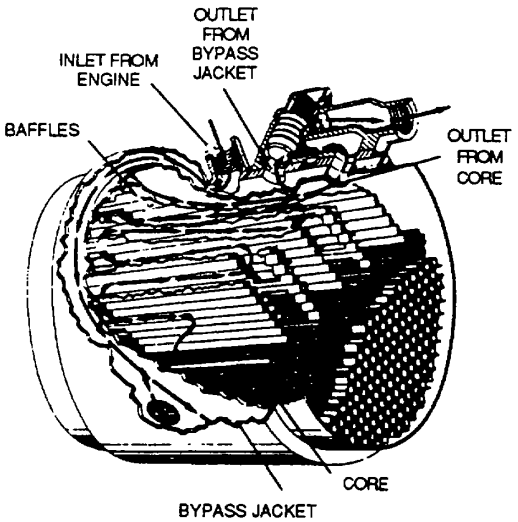

Figure 3-10. Reciprocating Engine Oil Cooler

(2) *Turbine engine oil coolers*. Oil coolers are used in the lubricating systems of some turbine engines to reduce the temperature of the oil to a degree suitable for recirculation through the system. Two basic types of oil coolers in general use are the air-cooled oil cooler and the fuel-cooled oil cooler, as shown in figure 3-11. The fuel-cooled oil cooler acts as a fuel/oil heat exchanger in that the fuel cools the oil and the oil heats the fuel. The air-cooled oil cooler normally is installed at the forward end of the engine. It is similar in construction and operation to the air-cooled cooler used on reciprocating engines.

(3) *Maintenance.* When components of an aircraft transmission or engine oil system have experienced internal failure, and metal particles are evident in the oil system, the oil cooler shall be removed and replaced. If the -23 maintenance manual of the aircraft requires retirement or condemnation of the metal-contaminated oil coolers, identify the cooler with tag DD Form 1577-2. If the -23 maintenance manual does not require condemnation of contaminated coolers, identify the cooler as follows: (a) Tag the oil cooler with a DD Form 1577-2 and show in block "reason for repairable condition" that oil cooler is being returned for decontamination.

(b) A locally fabricated metal tag made from 0.040 gauge SO aluminum material (size 3/4 by 2-1/2 inches with hole drilled 3/8 inch in from end of tag to accommodate installation cooler) will be attached to the cooler. Stamp the words METAL CONT on the tag with a die stamp. The metal tag should be bent to conform to the configuration of the cooler to prevent tag from being torn off during packaging or handling.

h. Pressure Devices. Various pressure devices regulate pressure in aircraft oil systems. These include relief valves, pumps, check valves, surge valves, and pressure switches in oil pressure indicating gauges. Maintenance consists mainly of adjusting, removing, cleaning, and replacement of various components. Each type is explained in the following paragraphs.

(1) *Relief valves*. Oil pressure relief valves, as shown in figure 3-12, limit oil pressure to the value specified by the engine manufacturer. The oil pressure must be high enough to ensure adequate lubrication of the engine and accessories at high speeds and powers, but not too high to cause leakage and damage. Maintenance usually consists of an oil pressure adjustment. The relief valve is usually adjusted by means of a screw which changes the pressure on the spring or springs controlling the valve. Make the pressure adjustments, while the engine is idling and tighten the adjustment screw locknut after each adjustment. Check the oil pressure reading while the engine is running at the rpm specified in the aircraft maintenance manual. The oil pressure reading should be between the limits prescribed in the aircraft maintenance manual.

(2) *Oil pumps*. The oil pump is designed to supply oil under pressure to the parts of the engine that require lubrication. The pump may be one of several types. The gear and piston oil pumps are the most common. Each of these pumps has several possible configurations. A gear-type pump is shown in figure 3-13. Maintenance usually consists of removal and replacement.

(3) *Check valves*. Check valves are sometimes installed in the oil supply lines of dry-sump oil systems to prevent reservoir oil from seeping through the oil pump elements and high-pressure lines into the engine after shutdown. Check valves, by stopping flow in an opposite direction, prevent accumulations of undue amounts of oil in the accessory gearbox, compressor rear housing, and combustion chamber. Such accumulations could cause excessive loading of the accessory drive gears during starts, contamination of the cabin pressurization air, or internal oil fires.

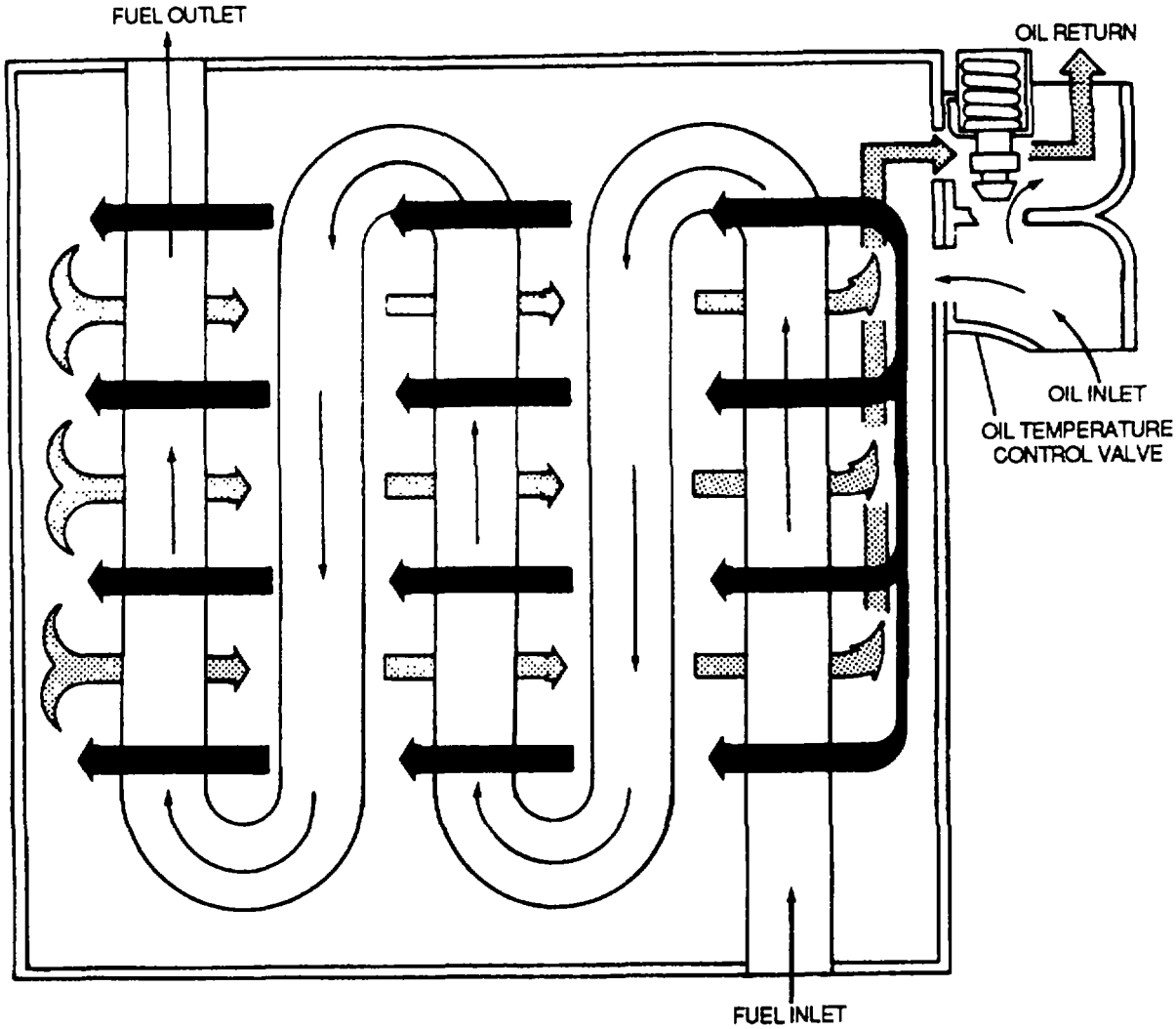

Figure 3-11. Turbine Engine Fuel/Oil Heat Exchanger Cooler

(4) *Surge valves*. Surge valves are used to prevent high oil pressure from bursting the oil cooler or blowing hose connections. Figure 3-14 shows a surge valve incorporated in the oil cooler flow control valve. The high-pressure operation condition is shown in figure 3-14, where the high oil pressure at the control valve inlet has forced the surge valve upward. Note how this movement has opened the surge valve and, at the same time, seated the poppet valve. The closed poppet valve prevents oil from entering the cooler proper; therefore, the scavenge oil passes directly to the tank outlet without passing through either the cooler bypass jacket or the core. When the pressure drops to a safe value, the spring forces the surge and poppet valves downward, closing the surge valve and opening the poppet valve. Oil then passes from the control valve inlet, through the open poppet valve, and into the bypass jacket. The thermostatic valve, according to oil temperature, then determines oil flow either through the bypass jacket or through the core. The check valve opens to allow the oil to reach the tank return line.

(5) *Gauges.* The oil pressure gauge indicates the pressure at which the oil enters the engine from the pump. This gauge warns of possible engine failure caused by an exhausted oil supply, failure of the oil pump, burned-out bearings, ruptured oil lines, or other causes that may be indicated by a loss of oil pressure. Bourdon-tube, dual-type, and electrical transmitter types are explained in the following paragraphs.

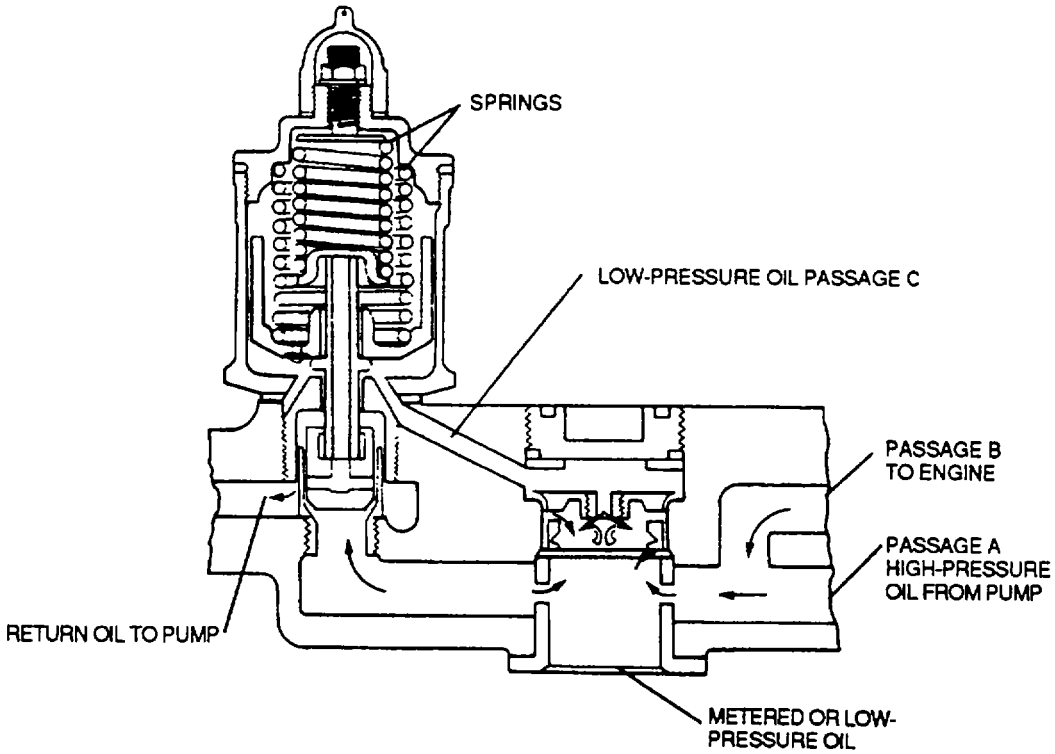

COMPENSATING TYPE

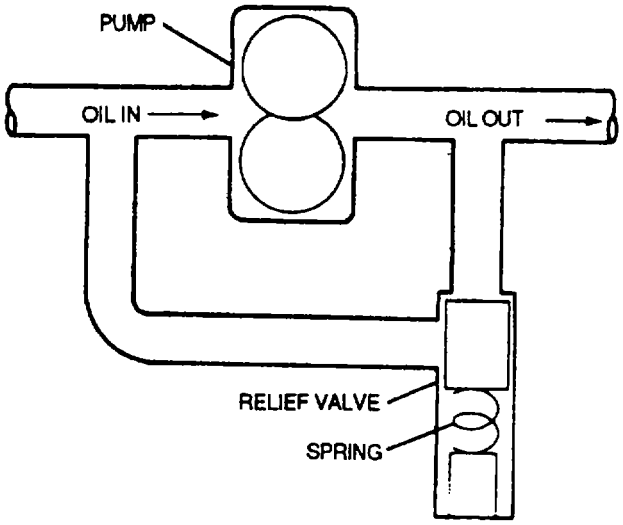

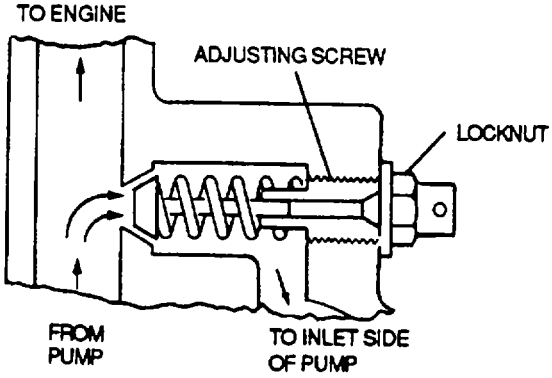

SINGLE PRESSURE TYPE

Figure 3-12. Oil Pressure Relief Valves

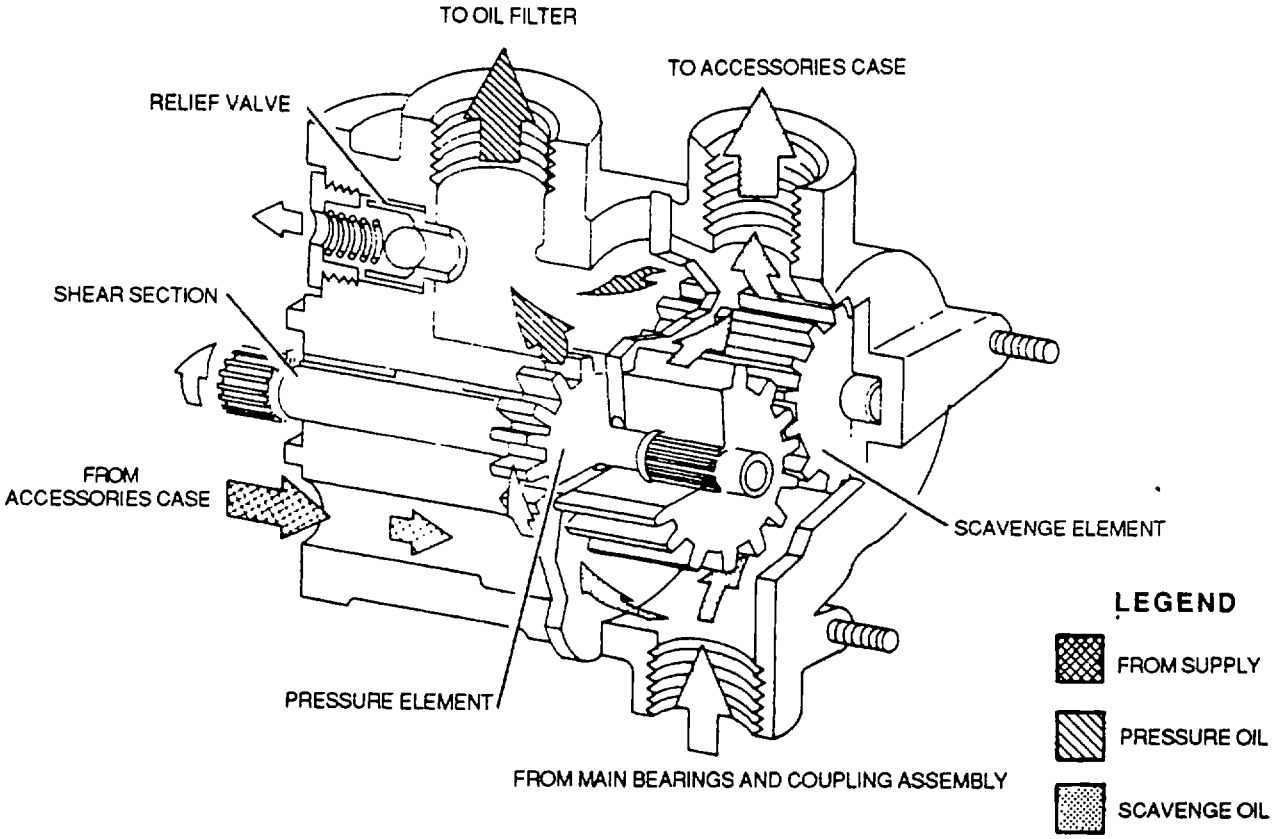

Figure 3-13. Gear- Type Oil Pump

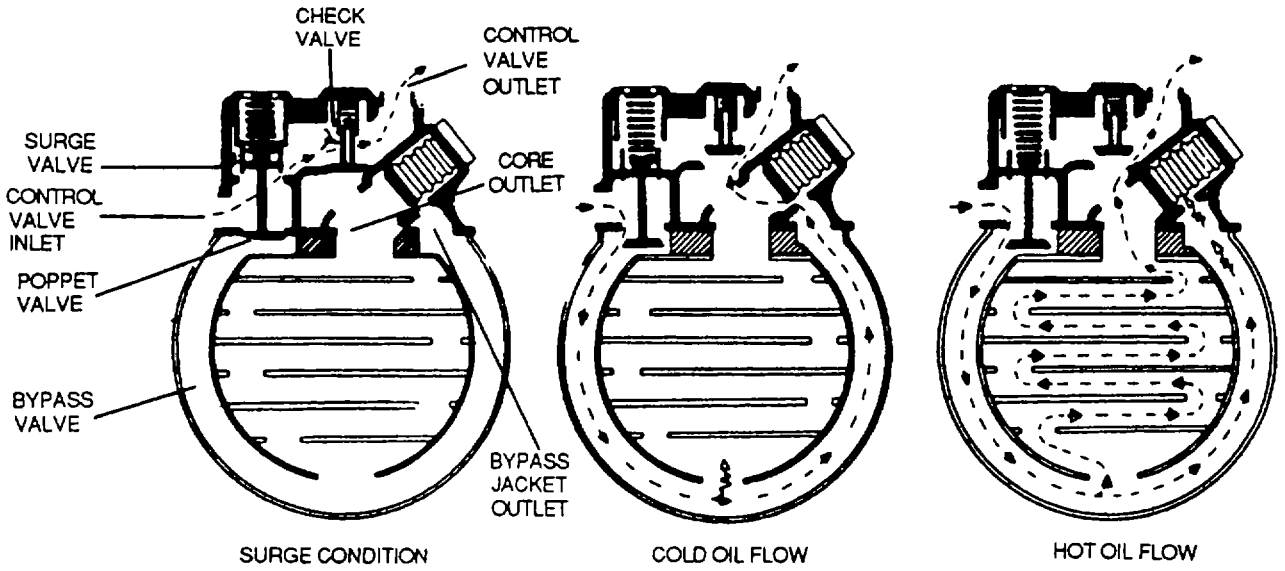

Figure 3-14. Surge Valve Example

(a) *Bourdon-tube*. This tube gauge is constructed the same as other Bourdon-type gauges except that it has a small restriction built into the instrument case or into the nipple connection leading to the Bourdon tube. This restriction prevents the surging action of the oil pump from damaging the gauge or causing the pointer to oscillate too violently with each pressure pulsation. Operation range markings are placed on the cover glass, or the face of the gauge, to indicate the safe range of oil pressure for a given installation. Check the applicable maintenance manual.

(b) *Dual-type.* A dual-type oil pressure gauge is available for use on multi-engine aircraft. The dual indicator contains two Bourdon tubes, housed in a standard instrument case, one tube being used for each engine. The connections extend from the back of the case to each engine. There is one common movement assembly, but the moving parts function independently. In some installations, the line leading from the engine to the pressure gauge is filled with light oil. Since the viscosity of this oil will not vary much with changes in temperature, the gauge will respond better to changes in oil pressure. In time, engine oil will mix with some of the light oil in the line to the transmitter, and during cold weather, the thicker mixture will cause sluggish instrument readings. To correct this condition, the gauge line must be disconnected, drained, and refilled with light oil. Check the applicable maintenance manual.

(c) *Electrical transmitter.* In this type of indicating system, the oil pressure being measured is applied to the inlet port of the electrical transmitter, where it is conducted to a diaphragm assembly by a capillary tube. The motion produced by the diaphragm's expansion and contraction is amplified through a lever and gear arrangement. The gear varies the electrical value of the indicating circuit, which, in turn, is reflected on the indicator in the cockpit. This type of indicating system replaces long fluid-filled tubing lines with an almost weightless piece of wire.

i. Oil Jets. Oil jets (or nozzles) are located in the pressure lines adjacent to, or within, the bearing compartments and rotor shaft couplings.

(1) *Types.* The atomized spray and air-oil mist spray oil jets are the types commonly used. The spray or mist is produced by tapping high-pressure bleed air from the compressor to the oil nozzle outlet.

(2) *Inspection*. Inspect oil jets for clogged orifices. The oil jets are easily clogged because of the small size of the orifice. Oil filters should be checked frequently for contamination and the oil should be free of all foreign particles.

NOTE

If the last-chance filters in the oil jets should become clogged, bearing failure usually results, since nozzles are not accessible for cleaning except during engine overhaul.

(3) *Maintenance*. Refer to the applicable maintenance manual for oil jet maintenance. Ensure that oil and filters are changed regularly.

j. Flushing Oil Systems. Flushing of the oil system shall be accomplished when a new engine is installed, when the oil system is found contaminated, or when oil is changed as specified in the applicable inspection requirements manual. Flush the oil system as follows:

(1) Drain oil system.

WARNING

Drycleaning solvent is flammable and solvent vapors are toxic. Use P-D-680, Type II Solvent in a well-ventilated area. Keep away from open flames. Avoid prolonged solvent contact with skin.

(2) Clean and flush system with a solution of 8 parts kerosene, Federal Specification VV-K-211, 1 part drycleaning solvent, Federal Specification P-D-680, and 1 part corrosive-preventive, MIL-C-6529. In cold weather, keep solution warm by using flashproof, thermostatically controlled electrical heating elements. Flushing solution temperature shall not exceed 80 °F (27 °C).

NOTE

Lines that cannot be cleaned while installed will be removed for cleaning.

(3) Remove oil screens and filters.

(a) When removing screen of filter, catch oil, which comes from around screen or filter and from screen or filter itself, in a clean, white cloth.

(b) Dip cloth and its contents into cleaning solution and wash away dirt and carbon.

(c) Examine foreign material found in cloth as well as that adhering to screen as a means of determining condition of engine.

(d) Clean filters and screen as outlined in steps *(a)* and *(b)*.

k. *Prevention of Sludge Buildup.* An inherent characteristic of internal combustion engines is the generation of carbon solids. These carbon solids are moved about in the engine and oil systems as the oil is pumped through its circuit. The oil ultimately becomes so loaded with carbon that deposits begin to build up in areas where the oil is less turbulent, similar to sand deposited on sandbars in streams. Commanders have an option of two courses to prevent this undesirable situation, adding cyclohexanone or periodic oil dilution.

(1) Cyclohexanone oil additive. Cyclohexanone has such a strong affinity for carbon solids that it holds the carbon solids in suspension so long as the oil in the oil system contains 2 percent of cyclohexanone by volume. Listed in the following paragraphs are certain procedures which must be adhered to in this method of sludge prevention.

NOTE

When cyclohexanone is added to oil in a storage or servicing unit, the oil and additive must be circulated to ensure proper mixing.

(a) New or newly overhauled engines. For new or newly overhauled engines, perform the following procedures:

NOTE

Engines with less than 100 hours operating time are considered new or newly overhauled.

1 Maintain oil in oil system at 98 percent engine oil and 2 percent cyclohexanone. These percentages are by volume.

NOTE

Maintain these percentages in oil servicing units when this system is used. 2 Change oil every 300 hours of engine operating time, or at inspection nearest to 300 hours of engine operating time.

(b) Engines with more than 100 hours (dirty engines). For dirty engines, perform the following procedures:

1 Drain and flush entire oil system as outlined in applicable maintenance manual.

2 Thoroughly clean all oil screens and strainers.

3 Service oil system with a mixture of 98 percent engine oil and 2 percent cyclohexanone.

4 Repeat 1. 2 and 3, above, after first 50 hours of engine operating time, and clean engine oil strainer at end of each 10 hours of engine operating time during this 50 hours.

5 All subsequent servicing of engine oil system shall be with a mixture prescribed in step 1.

(2) Periodic oil dilution. This procedure is applicable to all engines having less than 130 hours operating time since new or newly overhauled. Once periodic oil dilutions is adopted, its use should be continuous throughout the life of the engine. When an engine has over 130 hours of operation since new or overhaul, and over 65 hours of operation has elapsed since the last oil dilution (either periodic or for cold weather starting), the engine will be considered a dirty engine, and use of periodic oil dilution may be applied only after the engine has been desludged in accordance with the following:

(a) Accomplish periodic dilution prior to first flight of day or after last flight of the day. This does not imply that dilution will be accomplished prior to or after each flight in the day.

NOTE

· Time period between applications, and personnel who will perform dilution will be as directed by the local commander. When time between applications is less than 25 hours, procedures outlined in steps *(b)* and *(c)* will be accomplished.

· When time period between applications exceeds 25 hours and is less than 65 hours, procedures outlined in steps *(b)* through *(e)* shall be accomplished.

· Engines which have over 130 hours of operation since new, or newly overhauled, or have over 65 hours of operation without being diluted (dirty engines), may be periodically diluted after following all procedures outlined in steps *(b)* through *(f)*.

CAUTION

Do not allow oil pressure to fall below 15 psi indicated during dilution operation. Extreme caution must be exercised to prevent overdilution.

(b) Dilute oil 10 percent, using dilution procedure outlined in applicable operator's manual.

NOTE

When amount of dilution is not expressed in terms of percent in the applicable operator's manual, a comparable dilution time shall be specified. The dilution time is based on an ambient temperature of 10 °F (-12 °C), and is usually presented in a dilution table.

(c) Upon completion of steps (a) and (b), and prior to takeoff or high power operation, operate engine a minimum of 10 minutes to an oil temperature above 122°F (50 °C).

(d) On aircraft incorporating a diverter-segregator oil system, care should be taken to ensure that main oil tank and hopper are filled in accordance with instructions contained in applicable aircraft maintenance manuals.

(e) The following additional procedures will be adhered to on engines which are periodically diluted at intervals greater than 25 hours:

1 On engines equipped with automatic engine controls, desludge by advancing throttle to 2000 rpm and then cycle propeller through three cycles.

2 On engines equipped with propellers using engine oil, cycle propeller through three cycles.

3 Operate supercharger through three cycles, if equipped.

4 During above operations, oil temperatures should be maintained below 122 °F (50 °C) as long as possible. Before entire operation is completed, oil temperature may exceed 122 °F (50 °C).

5 Operation should be for approximately 10 minutes, but may exceed this, when necessary, to accomplish entire procedure.

6 Upon completion of preceding operations, remove, inspect, and clean when applicable, engine inlet oil screen, front and rear sump plugs, rocker box drain mainfold strainer assembly, and automatic engine control screen.

7 If excessive deposits are noted during screen examination, engine should be run an additional 10 minutes, and inspection requirements contained in step 6 repeated.

8 After shutdown (preferably 1 to 2 hours), drain 1 gallon of oil from Y drain, hopper tank, and oil cooler drain to eliminate sludge which may have accumulated at these points.

9 Reservice oil tank hopper to full normal level on engines using diverter-segregator system.

(f) Engines which have over 130 hours of operations since new, or newly overhauled, and have over a 65-hour period of operation since last dilution (dirty engines), require that the following procedures be accomplished in addition to those outlined in steps (b) through (e) above.

1 In place of oil draining required by procedures outlined in step (e) 8, drain and replace all oil from engine oil tank.

2 Remove, inspect, clean, and reinstall (safety as required) propeller dome and propeller governor oil screen on propellers which use engine oil.

3 Carefully inspect main oil screen and sump plugs, when applicable, at 10-hour operation intervals (or as close thereto as possible) for 100 hours after desludging dilution.

I. Cold Weather Maintenance. The following paragraphs explain procedures which will help ensure safe cold weather engine starting.

(1) Draining sumps. When operating aircraft at temperatures below freezing, or when temperature may drop below the freezing point, open the oil tank sump drains sufficiently to drain off any accumulation of water.

(2) Oil heating. Oil heating is accomplished by oil immersion heaters. Two different size heaters that operate on a current supply of 115 volts are available: 250-watt capacity and 750-watt capacity. The aircraft skin near the oil tank filler neck will be stenciled with size of heater to be used. When not marked, use 250-watt heater in all self-sealing tanks and in metal tanks with a capacity less than 20 gallons.

NOTE

- **The use of immersion heaters does not eliminate necessity for diluting oil.**
- **Use only heaters with a perforated shield in self-sealing tanks.**
- **Do not use a heater of greater wattage than called for in stenciled statement on aircraft skin.**
- **Be sure heating element is completely submerged when in use.**
- **Do not use a heater when free air temperature is above 32 °F (0 °C).**

(3) Oil dilution. When the viscosity of the oil must be reduced by oil dilution to facilitate cold weather starting of engines which have not had cyclohexanone added to the oil, or had periodic oil dilution, the reduced viscosity will also free carbon (sludge) deposits throughout the engine oil system and create the hazard of plugging drilled oil passageways, blocking oil cooler tubes, obstructing propeller mechanisms, or otherwise having harmful results. The first oil dilution of such an engine will be accomplished as follows:

NOTE

Accomplish this procedure when 50 hours engine time has elapsed since the preceding dilution.

(a) Run an initial oil dilution procedure for about 2 to 4 minutes.
(b) Stop engine; remove engine oil screen and clean off excess carbon and sludge by washing screens of filters as outlined in paragraph 3-6d(3).
(c) Drain approximately 1 gallon of oil from Y drain to eliminate sludge which may have collected in lines in vicinity of Y drain and in hopper sump.
(d) Start engine and run at 1000 to 1200 rpm for 20 minutes to evaporate fuel in oil.
(e) Again dilute engine oil for specified period of time and clean screens.

3-7. Handling and Storage of Oils. Covered and outside storage of oil drums is explained in the following paragraphs.

a. Covered Storage. Filled and empty 55-gallon drums may be stored in warehouse or shed facilities. For covered storage, drums may be stacked horizontally or palletized in the vertical position. Stacked drums will be placed horizontally (on sides) with closures (bungs and vents) facing outward and bungs at 3 and 9 o'clock position. Ends of bottom tiers will be braced.

(1) Vertical storage. For convenience of handling and storage, drums may be palletized in the vertical position. Either 40by 48-inch or 48by 60inch pallets will be satisfactory.

(2) Identification. For proper identification and quality surveillance, product will be stored in such a manner as to maintain product/grade and batch/lot integrity.
(3) Stability. If drums are multiple-tiered on pallets, a single strap or tape will be applied around each pallet to enhance stability in handling or while in the stack.

(4) Placard. A placard will be prepared and displayed on the outward (aisle side) of each location. The placard will contain the following information: stock number, date of manufacture, batch/lot number, and contract number.

b. Outside Storage. Drums stored outside will be stacked or nested horizontally. Filled 55-gallon drums will be stored as outlined in DOD 4145.19-R-1, paragraph 5-704. Empty drums will be stored in accordance with DOD 4145.19-R-1, paragraph 5707.

3-8. Preservation. Reciprocating engine oil systems are preserved by draining the oil and refilling with MIL-C-6529, Type II oil. Refer to engine preservation procedures in TM 1-1500-204-23-1. The preservation procedures for each type of turbine engine is specified in the applicable aircraft maintenance manual.

APPENDIX A

REFERENCES

A-1. ARMY REGULATIONS (AR):

AR 385-010	Army Safety Program
AR 385-32	Protective Clothing and Equipment
AR 385-40	Accident Reporting and Records
AR 725-50	Requisitioning, Receipt and Issue System

A-2. DEPARTMENT OF THE ARMY DA FORM:

DA 2028	Recommended Changes to Publications and Blank Forms

A-3. DEPARTMENT OF DEFENSE (DOD):

DOD 4145.19-R-1	Storage and Materials Handling

A-4. FIELD MANUALS (FM):

FM 10-68	Aircraft Refueling
FM 10-69	Petroleum Supply Point Equipment and Operations
FM 10-70	Inspection and Testing Petroleum Products

A-5. MILITARY SPECIFICATIONS (MS):

MIL-F-8901	Inspection Requirements and Test Procedures for Filter Separators, Liquid Fuel and Filter-Coalescer Elements, Fluid Pressure
MIL-G-5572	Gasoline, Aviation, Grade 80/87, 100/131, 115/145
MIL-HDBK-200	Quality Surveillance Handbook for Fuels and Lubricants
MIL-STD-129	Marking for Shipment and Storage

A-6. TECHNICAL BULLETINS (TB):

TB 43-0106	Aeronautical Equipment Army Oil Analysis Program (AOAP)
TB 55-9150-200-24	Engine and Transmission Oils, Fuels and Additives for Army Aircraft

A-7. TECHNICAL MANUALS (TM):

TM 55-1510-series	AVUM and AVIM Aircraft Maintenance Manuals for Fixed Wing Aircraft
TM 55-1520-series	AVUM and AVIM Aircraft Maintenance Manuals for Rotary-Wing Aircraft

GLOSSARY

AMBIENT TEMPERATURE-- The degree of hotness or coldness of the immediate surroundings.

ATMOSPHERIC PRESSURE-- The pressure exerted by the atmosphere as a consequence of gravitational attraction exerted upon the column of air lying directly above the point of question.

BUNG-- A plug or stopper used to close or seal barrels.

CELL, FUEL-- Removable fuel container constructed of fabric, nylon, and gum stock.

DUNNAGE-- The padding enclosed in a shipping container.

EMULSION-- Suspension of a material within another.

INTEGRAL FUEL TANK-- A fuel tank which is part of the aircraft structure.

LEAK PATH-- The exit or path fuel follows to reach the external surface of a fuel tank.

MALLEABILITY-- The capability of being extended or shaped by beating with a hammer or by the pressure of rollers.

OXIDATION-- The process by which oxygen combines with oil to produce foaming, resulting in reduced lubricating capabilities.

ORIFICE-- An opening (such as a vent or hole) through which something may pass.

PRESERVATIVE-- A substance added to or coated over a product to preserve against damage or deterioration.

PURGE-- To remove flammable and toxic vapors capable of producing an explosive or unsafe health condition from inside a cell/tank.

SEALANT-- A special compounded natural or synthetic rubber which reacts to fuel contact by a very pronounced and immediate swelling action.

SPECIFIC GRAVITY-- Ratio of solid or liquid density compared to pure water.

VAPORIZATION-- The process of converting a liquid into a vapor.

VISCOSITY-- The resistance a liquid offers to flowing.

VOLATILITY-- A measure of the tendency of a liquid to vaporize.

INDEX

Subject	Paragraph Figure, Table Number
A	
Aeroquip Corporation Series 3700 and 3750 Quick Thread Couplings	2-5h
Applying Adhesive Mixture Over Buffed Area (Fuel Cell Repair - Goodyear, Loral, Engineer Fabrics)	F2-26
Applying Adhesive Over Area No More Than 1/8 Inch Buffed Area (Fuel Cell Repair - Goodyear, Loral, Engineer Fabrics)	F2-30
Applying Adhesive Over Previous Coat (Fuel Cell Repair - Goodyear, Loral, Engineer Fabrics)	F2-32
Applying Reinforcement Patch (Fuel Cell Repair - Goodyear, Loral, Engineer Fabrics)	F2-29
Auxiliary (Booster) Fuel Pump	F2-4
AVGAS Identification	T2-2
B	
Bail Lock-Type Coupling	F2-19
Bladder-Type Fuel Cells, Serviceable Limits	T2-6
Bridging, Sealant	F2-12
Buffing Damaged Area (Fuel Cell Repair - Goodyear, Loral, Engineer Fabrics)	F2-25
Buffing Surface 2 1/4 Inches Larger in all Directions (Fuel Cell Repair - Goodyear, Loral, Engineer Fabrics)	F2-27
C	
Can and Drum Marking	F2-23
Centering Wet Patch (Fuel Cell Repair - Goodyear, Loral, Engineer Fabrics)	F2-34
Characteristics of Vaporization	F2-1
Clamp Location for Tube Bends	F2-3
Closed-Circuit Fuel Receiver Installation	F2-20
Closed-Circuit Refueling Receptacles	2-5i
Cold Weather Maintenance, Oil Systems	3-6l
Consumable Materials	1-3
Contaminant Characteristics (of Fuel), Visual	T2-3
Contamination of Fuels	2-4
Contamination Prevention	2-4e
Microbiological Growths	2-4c
Solids	2-4b
Uses of Additives to Prevent Microbiological Growths	2-4d
Water	2-4a
Contamination Prevention (for Fuels)	2-4e
Coupling	
Ball Lock-Type	F2-19
Full Grip Push/Pull-Type	F2-17
Inst-O-Matic Push/Pull Type	F2-16
Quick-Threading/ Indicating Type	F2-15
Screw-Type	F2-14
Straight Flow Ball/ Valve-Type	F2-18
Covered Storage of Oils	3-7a

INDEX- CONT

Subject — **Paragraph Figure, Table Number**

D

DA Form 1804 (Petroleum Sample) F2-22
Damage Classification and Repair Limits, Fuel Cell (Fuel Cell Repair - Goodyear, Loral, Engineer Fabrics) 2-7b
Drain Containers (Fuel Systems), Safety Precautions and Procedures 2-2e
Dry-Sump Lubrication System for Reciprocating Engines F3-3
Dry-Sump Lubrication System for Turbine Engines F3-5

E

Engine Oils
- Reciprocating T3-1
- Turbine T3-2

Engine-Driven Fuel Pump F2-5
Expendable/Durable Supplies and Materials List T2-11
Exterior Plies, Repair Fuel Cell (Fuel Cell Repair - Goodyear, Loral, Engineer Fabrics) 2-7d
Extemal Support Fittings/Hangers, Repair/Replacement of Intemal and (Fuel Cell Repair - Goodyear, Loral, Engineer Fabrics) 2-7g

F

Fabric Cutting, Overlap Damaged Area (Fuel Cell Repair - Goodyear, Loral, Engineer Fabrics) F2-28
Fasteners F2-9
Fillet Seal Deflection F2-13
Filling Cavity with Adhesive Mixture (Fuel Cell Repair - Goodyear, Loral, Engineer Fabrics) F2-33
Filter, Oil F3-6
Fitting Rework (Fuel Cell Repair - Goodyear, Loral, Engineer Fabrics 2-7h
Float Switch Unit F2-7
Float Switches 2-5e
Flushing Oil Systems 3-6j
Fuel Cell Repair (Goodyear, Loral, Engineer Fabrics) 2-7
- Fuel Cell Precautionary/Safety Criteria 2-7a
- Fuel Cell Damage Classification and Repair Limits 2-7b
- Repair Fuel Cell Outer Coating, Interior/Exterior Loose Fitting Range and Interior Loose Seam Damage 2-7c
- Repair Fuel Cell Exterior Plies 2-7d
- Repair Fuel Cell Inner Liner 2-7e
- Repair Fuel Cell Interior Plies 2-7f
- Repair/Replacement of Internal and External Support Fittings/Hangers 2-7g
- Fitting Rework 2-7h

Fuel Cell Repair (Amfuel, Firestone, Uniroyal) 2-8
- Fuel Cell Damage - Classification and Repair Limits 2-8a
- Non-Reparable Damage 2-8b
- Repairing Fuel Cell 2-8c

Fuel Cells and Tanks 2-5f
Fuel Identification 2-3
- Aviation Gas 2-3b
- Turbine Fuels 2-3a

INDEX- CONT

Subject — **Paragraph Figure, Table Number**

F - Continued

Fuel Lines 2-5a
Fuel Lines and Drains, Safety Precautions and Procedures 2-2a
Fuel Pump
  Auxiliary F2-4
  Engine-Driven F2-5
Fuel Pumps 2-5b
Fuel Receiver Installation (Closed-Circuit) F2-20
Fuel Strainers 2-5d, F2-6
Fuel Sumps 2-5c
Fuel System Maintenance 2-5
  Aeroquip Corporation Series 3766 and' 3756 Quick Thread Couplings 2-5h
  Closed-Circuit Refueling Receptacles 2-5i
  Float Switches 2-5e
  Fuel Cells and Tanks 2-5f
  Fuel Lines 2-5a
  Fuel Pumps 2-5b
  Fuel Strainers 2-5d
  Fuel Sumps 2-5c
  Fuel System Troubleshooting 2-5j
  Testing Fuel Systems and Tanks/Cells for Leaks 2-5g
Fuel System Schematic, Typical F2-21
Fuel System Troubleshooting 2-5j
Fuel System Troubleshooting, Typical T2-9
Fuel Systems
  Contamination of Fuels 2-4
  Fuel Identification 2-3
  Fuel System Maintenance 2-5
  General 2-1
  Handling and Storage of Fuels 2-6
  Safety Precautions and Procedures 2-2
Fuel Tanks, Integral F2-8
Full Grip Push/Pull-Type Coupling F2-17

G

Gear-Type Oil Pump F3-13
General
  Fuel Systems 2-1
  Oil Systems 3-1

INDEX - CONT

Subject	Paragraph Figure, Table Number
H	
Handling and Storage of Fuels	2-6
Marking	2-6c
Receipt	2-6a
Storage Practices	2-6b
Handling and Storage of Oils	3-7
Covered Storage	3-7a
Outside Storage	3-7b
Heat Exchanger Cooler, Turbine Engine Fuel/Oil	F3-1
I	
Identification of AVGAS	T2-2
Identification of Oils	3-4
Reciprocating Engines	3-4a
Turbine Engines	3-4b
Inner Liner, Repair Fuel Cell (Fuel Cell Repair - Goodyear, Loral, Engineer Fabrics)	2-7e
Inspection Valves, Quick-Disconnect Couplings	T2-8
Inst-O-Matic Push/Pull-Type Coupling	F2-16
Integral Fuel Tanks	F2-8
Interior Plies, Repair Fuel Cell (Fuel Cell Repair - Goodyear, Loral, Engineer Fabrics)	2-7f
Internal and External Support Fittings/Hangers, Repair/Replacement of (Fuel Cell Repair - Goodyear, Loral, Engineer Fabrics)	2-7g
J	
Jet Fuel Used in Army Aircraft (MIL-T-5624), Critical Characteristics and Specification Requirements for	T2-1
L	
Leak Path Examples, Long Leak	F2-10
Leaks, Fastener	F2-9
Long Leak Path Examples	F2-10
Lubrication System for Reciprocating Engines	
Dry-Sump	F3-3
Wet-Sump	F3-2
Lubrication System for Turbine Engines	
Dry-Sump	F3-5
Wet-Sump	F3-4

INDEX- CONT

Subject	Paragraph Figure, Table Number
M	
Magnetic Plugs and Chip Detectors	3-6f
Main Oil Strainers	F3-8
Marking, Can and Drum	F2-23
Marking (Fuel Containers)	2-6c
Microbiological Growths (Contaminating Fuels)	2-4c
Micron Particle Size	F2-2
Mixing Ratios (for Dyes)	T2-7
Multiple Leak Paths (Single Leak Source)	F2-11
0	
Oil Contamination	3-5
Prevention	3-5c
Solids	3-5b
Use of Brayco 599	3-5d
Water	3-5a
Oil Cooler, Reciprocating Engine	F3-10
Oil Coolers, Maintenance	3-6g
Oil Filter	F3-6
Oil Filter, Spacers and Screens Type	F3-7
Oil Filters, Maintenance	3-6c
Oil Jets, Maintenance	3-6i
Oil Lines, Maintenance	3-6b
Oil Pressure Relief Valves	F3-12
Oil Pump	F3-13
Oil Screen Types	F3-9
Oil Screens, Maintenance	3-6d
Oil Systems	
General	3-1
Handling and Storage of Oils	3-7
Identification of Oils	3-4
Oil Contamination	3-5
Oil Systems Maintenance	3-6
Preservation	3-8
Safety Precautions and Procedures	3-2
Types of Oil	3-3
Outer Coating, Repair Fuel Cell (Fuel Cell Repair - Goodyear, Loral, Engineer Fabrics)	2-7c
Oil Systems Maintenance	3-6
Cold Weather Maintenance	3-6i
Flushing Oil Systems	3-6j
Magnetic Plugs and Chip Detectors	3-6f
Oil Coolers	3-6g
Oil Filters	3-6c
Oil Jets	3-6i
Oil Lines	3-6b

INDEX - CONT

Subject — **Paragraph, Figure, Table Number**

O - Continued

Oil Screens 3-6d
Oil Tanks 3-6e
Pressure Devices 3-6h
Prevention of Sludge Buildup 3-6k
Types of Oil Systems 3-6a

P

Particle Size, Micron F2-2
Personal Precautions and Procedures, Fuel Systems 2-2f
Petroleum Sample Form DA 1804 ..... F2-22
Precautionary/Safety Criteria, Fuel Cell (Fuel Cell Repair - Goodyear, Loral, Engineer Fabrics) 2-7a
Preservation of Oil Systems 3-8
Pressure Devices 3-6h
Prevention (of Oil Contamination) 3-5c
Prevention of Sludge Buildup 3-6k
Purpose of Manual 1-1

Q

Quick-Disconnect Coupling Inspection Valves T2-8
Quick Threading/Indicating Type Coupling F2-15

R

Ratios (for Dye Mixing) T2-7
Receipt (of Fuel Containers) 2-6a
Reciprocating Engine Oil Cooler F3-10
Reciprocating Engines, Identification of Oils for 3-4a
Relief Valves, Oil Pressure F3-12
Removing Outer Coating (Fuel Cell Repair - Goodyear, Loral, Engineer Fabrics) F2-24
Repair, Fuel Cell (Goodyear, Loral, Engineer Fabrics) 2-7
- Fitting Rework 2-7h
- Fuel Cell Damage Classification and Repair Limits 2-7b
- Fuel Cell Precautionary/Safety Criteria 2-7a
- Repair Fuel Cell Exterior Plies 2-7d
- Repair Fuel Cell Inner Liner 2-7e
- Repair Fuel Cell Interior Plies 2-7f
- Repair Fuel Cell Outer Coating 2-7c
- Repair/Replacement of Internal and Extemal Support Fittings/Hangers 2-7g

Repair, Fuel Cell (Amfuel, Firestone, Uniroyal) 2-8
- Fuel Cell Damage - Classification and Repair Limits 2-8a
- Non-Reparable Damage 2-8b
- Repairing Fuel Cell 2-8c

Rework, Fitting (Fuel Cell Repair - Goodyear, Loral, Engineer Fabrics) 2-7h

INDEX- CONT

Subject	Paragraph Figure, Table Number
S	
Safety Precautions and Procedures, Fuel Systems	2-2
Drain Containers	2-2e
Fuel Lines and Drains	2-2a
Personal	2-2f
Tool Boxes	2-2c
Tools	2-2b
Work Stands	2-2d
Safety Precautions and Procedures, Oil Systems	3-2
Safety Precautions, Fuel Storage	T2-10
Scope of Manual	1-2
Screen, Oil, Type	F3-9
Screw-Type Coupling	F2-14
Seal Deflection, Fillet	F2-13
Sealant Bridging	F2-12
Self-Sealing Fuel Cells, Serviceable Limits	T2-5
Serviceable Limits (Bladder-Type Fuel Cells)	T2-6
Serviceable Limits (Self-Sealing Fuel Cells)	T2-5
Single Leak Source, Multiple Leak Path	F2-11
Solids (Contaminating Fuel)	2-4b
Solids (Contaminating Oil)	3-5b
Spacers and Screens Oil Fitter	F3-7
Spacing, Support Clamp	T2-4
Storage Practices, Fuel	2-6b
Straight Flow Ball/Valve-Type Coupling	F2-18
Support Clamp Spacing	T2-4
Support Fittings/Hangers, Repair/Replacement of Internal and External (Fuel Cell Repair - Goodyear, Loral, Engineer Fabrics)	2-7g
Surge Valve Example	F3-14
T	
Testing Fuel Systems and Tanks/Cells for Leaks	2-5g
Tool Box (Fuel Systems), Safety Precautions and Procedures	2-2c
Tools (Fuel Systems), Safety Precautions and Procedures	2-2b
Trimming Away Damaged Areas (Fuel Cell Repair - Goodyear, Loral, Engineer Fabrics)	F2-31
Tube Bends, Clamp Location for	F2-3
Turbine Engine Fuel/oil Heat Exchanger Cooler	F3-11
Turbine Engine, Identification of Oils for	3-4b
Turbine Engine Oil Use Temperature Chart	F3-1
Turbine Engine Oils	T3-2
Types of Oil Systems	3-6a
Types of Oils	3-3
Typical Fuel System Schematic	F2-21
Typical Fuel System Troubleshooting Chart	T2-9

INDEX - CONT

Subject	Paragraph Figure, Table Number
U	
Use Temperature Chart, Turbine Engine Oil	F3-1
Uses of Additives to Prevent Microbiological Growth (in Fuels)	2-4d
V	
Valve, Surge, Example of	F3-14
Vaporization Characteristics, Fuel	F2-1
Visual Contaminant Characteristics, Fuel	T2-3
W	
Water (Contamination of Fuel)	2-4a
Water (Contamination of Oil)	3-5a
Wet-Sump Lubrication System for Reciprocating Engines	F3-2
Wet-Sump Lubrication System for Turbine Engines	F3-4
Work Stands (Fuel Systems), Safety Precautions and Procedures	2-2d

*U.S. GOVERNMENT OFFICE: 1997 - 554 024/60006

By Order of the Secretary of the Army:

GORDON R. SULLIVAN
General, United States Army
Chief of Staff

Official:

MILTON H. HAMILTON
Administrative Assistant to the
Secretary of the Army
02554

Distribution:

To be distributed in accordance with DA Form 12-31-E, block no. 3226, requirements for TM 1-1500-204-23-3

☆ U.S. GOVERNMENT PRINTING OFFICE: 1994-300-421/00197

These are the instructions for sending an electronic 2028

The following format must be used if submitting an electronic 2028. The subject line must be exactly the same and all fields must be included; however only the following fields are mandatory: 1, 3, 4, 5, 6, 7, 8, 9, 10, 13, 15, 16, 17, and 27.

From: "Whomever" <whomever@avma27.army.mil>
To: mpmt/oavma28@st-louis-emh7.army.mil
Subject: DA Form 2028

1. **From:** Joe Smith
2. Unit: home
3. **Address:** 4300 Park
4. **City:** Hometown
5. **St.:** MO
6. **Zip:** 77777
7. **Date Sent:** 19-OCT-93
8. **Pub no:** 55-2840-229-23
9. **Pub Title:** TM
10. **Publication Date:** 04-JUL-85
11. Change Number: 7
12. Submitter Rank: MSG
13. **Submitter FName:** Joe
14. Submitter MName: T
15. **Submitter LName:** Smith
16. **Submitter Phone:** 123-123-1234
17. **Problem: 1**
18. Page: 2
19. Paragraph: 3,
20. Line: 4
21. NSN: 5
22. Reference: 6
23. Figure: 7
24. Table: 8
25. Item: 9
26. Total: 123
27. **Text:**

This is the text for the problem below line 27.

RECOMMENDED CHANGES TO EQUIPMENT TECHNICAL PUBLICATIONS

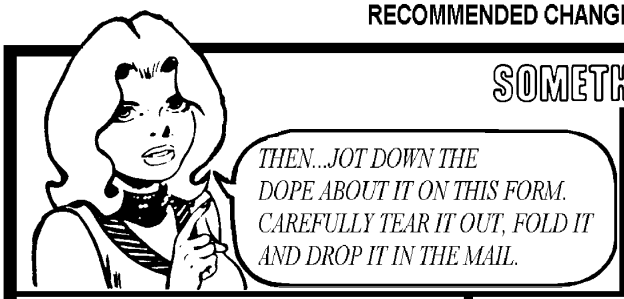

SOMETHING WRONG WITH PUBLICATION

FROM: (PRINT YOUR UNIT'S COMPLETE ADDRESS)

DATE SENT

PUBLICATION NUMBER	PUBLICATION DATE	PUBLICATION TITLE

BE EXACT PIN-POINT WHERE IT IS

PAGE NO.	PARA-GRAPH	FIGURE NO.	TABLE NO.

IN THIS SPACE, TELL WHAT IS WRONG AND WHAT SHOULD BE DONE ABOUT IT.

PRINTED NAME, GRADE OR TITLE AND TELEPHONE NUMBER	SIGN HERE

DA FORM 1 JUL 79 2028-2

PREVIOUS EDITIONS ARE OBSOLETE.

P.S.--IF YOUR OUTFIT WANTS TO KNOW ABOUT YOUR RECOMMENDATION MAKE A CARBON COPY OF THIS AND GIVE IT TO YOUR HEADQUARTERS.

The Metric System and Equivalents

Linear Measure

1 centimeter = 10 millimeters = .39 inch
1 decimeter = 10 centimeters = 3.94 inches
1 meter = 10 decimeters = 39.37 inches
1 dekameter = 10 meters = 32.8 feet
1 hectometer = 10 dekameters = 328.08 feet
1 kilometer = 10 hectometers = 3,280.8 feet

Weights

1 centigram = 10 milligrams = .15 grain
inches
1 decigram = 10 centigrams = 1.54 grains
10.76 sq. feet
1 gram = 10 decigram = .035 ounce
1,076.4 sq. feet
1 decagram = 10 grams = .35 ounce
= 2.47 acres
1 hectogram = 10 decagrams = 3.52 ounces
mile
1 kilogram = 10 hectograms = 2.2 pounds
1 quintal = 100 kilograms = 220.46 pounds
1 metric ton = 10 quintals = 1.1 short tons

Liquid Measure

1 centiliter = 10 milliters = .34 fl. ounce
1 deciliter = 10 centiliters = 3.38 fl. ounces
1 liter = 10 deciliters = 33.81 fl. ounces
1 dekaliter = 10 liters = 2.64 gallons
1 hectoliter = 10 dekaliters = 26.42 gallons
1 kiloliter = 10 hectoliters = 264.18 gallons

Square Measure

1 sq. centimeter = 100 sq. millimeters = .155 sq.
inch
1 sq. decimeter = 100 sq. centimeters = 15.5 sq.

1 sq. meter (centare) = 100 sq. decimeters =

1 sq. dekameter (are) = 100 sq. meters =

1 sq. hectometer (hectare) = 100 sq. dekameters

1 sq. kilometer = 100 sq. hectometers = .386 sq.

Cubic Measure

1 cu. centimeter = 1000 cu. millimeters = .06
cu. inch
1 cu. decimeter = 1000 cu. centimeters = 61.02
cu. inches
1 cu. meter = 1000 cu. decimeters = 35.31 cu.
feet

Approximate Conversion Factors

To change	*To*	*Multiply by*	*To change*	*To*	*Multiply by*
inches	centimeters	2.540	ounce-inches	Newton-meters	.007062
feet	meters	.305	centimeters	inches	.394
yards	meters	.914	meters	feet	3.280
miles	kilometers	1.609	meters	yards	1.094
square inches	square centimeters	6.451	kilometers	miles	.621
square feet	square meters	.093	square centimeters	square inches	.155
square yards	square meters	.836	square meters	square feet	10.764
square miles	square kilometers	2.590	square meters	square yards	1.196
acres	square hectometers	.405	square kilometers	square miles	.386
cubic feet	cubic meters	.028	square hectometers	acres	2.471
cubic yards	cubic meters	.765	cubic meters	cubic feet	35.315
fluid ounces	milliliters	29,573	cubic meters	cubic yards	1.308
pints	liters	.473	milliliters	fluid ounces	.034
quarts	liters	.946	liters	pints	2.113
gallons	liters	3.785	liters	quarts	1.057
ounces	grams	28.349	liters	gallons	.264
pounds	kilograms	.454	grams	ounces	.035
short tons	metric tons	.907	kilograms	pounds	2.205
pound-feet	Newton-meters	1.356	metric tons	short tons	1.102
pound-inches	Newton-meters	.11296			

Temperature (Exact)

°F	Fahrenheit temperature	5/9 (after subtracting 32)	Celsius temperature	°C

PIN: 070462-000