TECHNICAL MANUAL

AVIATION UNIT MAINTENANCE (AVUM) AND AVIATION INTERMEDIATE MAINTENANCE (AVIM) MANUAL

FOR

GENERAL AIRCRAFT MAINTENANCE

(SHEET METAL SHOP PRACTICES)

VOLUME 10

*This manual together with TM 1-1500-204-23-1 through TM 1-1500-204-23-9, dated 31 July 1992, supersedes TM 55-1500-204-25/1, dated 6 April 1970, including all changes.

DISTRIBUTION STATEMENT A	Approved for public release; distribution is unlimited.

HEADQUARTERS, DEPARTMENT OF THE ARMY
31 JULY 1992

CHANGE

NO. 1

HEADQUARTERS
DEPARTMENT OF THE ARMY
WASHINGTON, D.C., 1 FEBRUARY 2000

Technical Manual

AVIATION UNIT MAINTENANCE (AVUM) AND AVIATION INTERMEDIATE MAINTENANCE (AVIM) MANUAL FOR GENERAL AIRCRAFT MAINTENANCE (SHEET METAL SHOP PRACTICES) VOLUME 10

DISTRIBUTION STATEMENT A: Approved for public release; distribution is unlimited.

TM 1-1500-204-23-10, dated 31 July 1992, is changed as follows:

1. Remove and insert pages as indicated below. New or changed A vertical bar in the margin indicates text material. A miniature pointing hand indicates an illustration change.

Remove pages	Insert pages
	A and B
I and ii	I and ii
2-1 and 2-2	2-1 and 2-2
3-7 and 3-8	3-7 and 3-8
3-13 through 3-18	3-13 through 3-18
5-15 and 5-16	5-15 and 5-16
5-21 and 5-22	5-21 and 5-22
5-25 and 5-26	5-25 and 5-26
5-37 and 5-38	5-37 and 5-38
5-47 and 5-48	5-47 and 5-48
6-5 through 6-8	6-5 through 6-8
6-17 and 6-18	6-17 and 6-18
7-3 through 7-6	7-3 through 7-6
7-13 through 7-16	7-13 through 7-16
7-21 and 7-22	7-21 and 7-22

TM 1-1500-204-23-10
C1

Remove pages	Insert pages
7-29 through 7-32	7-29 through 7-32
7-41 and 7-42	7-41 and 7-42
7-47 and 7-48	7-47 and 7-48
7-71 and 7-72	7-71 and 7-72
7-85 through 7-90	7-85 through 7-90
7-99 and 7-100	7-99 and 7-100
7-105 and 7-106	7-105 and 7-106
8-1 through 8-4	8-1 through 8-4
8-7 and 8-8	8-7 and 8-8
8-13 and 8-14	8-13 and 8-14
8-29 and 8-30	8-29 and 8-30
8-35 through 8-40	8-35 through 8-40
8-43 through 8-46	8-43 through 8-46
9-7 and 9-8	9-7 and 9-8
9-11 and 9-12	9-11 and 9-12
9-29 through 9-34	9-29 through 9-34
10-1 through 10-6	10-1 through 10-6
10-11 and 10-12	10-11 and 10-12
10-15 through 10-22	10-15 through 10-22
11-3 and 11-4	11-3 and 11-4
12-1 through 12-4	12-1 through 12-4
12-9 and 12-10	12-9 and 12-10
A-1/(A-2 blank)	A-1/(A-2 blank)
B-3 and B-4	B-3 and B-4
B-7 and B-8	B-7 and B-8
Glossary-1 and 2	Glossary-1 and 2

2. Retain this sheet in front of manual for reference purposes.

By Order of the Secretary of the Army:

ERIC K. SHINSEKI
General, United States Amy
Chief of Staff

Official:

JOEL B. HUDSON
Administrative Assistant to the
Secretary of the Amy
9931302

DISTRIBUTION: To be distributed in accordance with Initial Distribution Number (IDN) 313226, requirements for TM 1-1500-204-23-10.

LIST OF EFFECTIVE PAGES

Insert latest changed pages; dispose of superseded pages in accordance with regulations.

NOTE: On a changed page, the portion of the text affected by the latest change is indicated by a vertical line, or other change symbol, in the outer margin of the page. Changes to illustrations are indicated by miniature pointing hands. Changes to wiring diagrams are indicated by shaded areas.

Dates of issue for original and changed pages are:

Original 31 July 1992 Change 1 1 February 2000

Page No.	*Change No.
Cover	0
a thru c	0
d blank	0
A and B	1
i	1
ii	0
1-1	0
1-2 blank	0
2-1 and 2-2	1
3-1 thru 3-7	0
3-8	1
3-9 thru 3-12	0
3-13	1
3-14	0
3-15	1
3-16	0
3-17	1
3-18	0
4-1 thru 4-12	0
5-1 thru 5-14	0
5-15	1
5-16 thru 5-21	0
5-22	1
5-23 and 5-24	0
5-25 and 5-26	1
5-27 thru 5-36	0
5-37	1
5-38 thru 5-46	0
5-47	1
5-48 thru 5-53	0
5-54 blank	0
6-1 thru 6-5	0
6-6 thru 6-8	1
6-9 thru 6-16	0
6-17	1
6-18 thru 6-21	0
6-22 blank	0
7-1 thru 7-3	0
7-4 and 7-5	1
7-6 thru 7-13	0
7-14	1
7-15	0
7-16	1
7-17 thru 7-21	0
7-22	1
7-23 thru 7-28	0
7-29	1
7-30	0
7-31	1
7-32 thru 7-41	0
7-42	1
7-43 thru 7-46	0
7-47	1
7-48 thru 7-71	0
7-72	1
7-73 thru 7-84	0
7-85	1
7-86	0
7-87	1
7-88	0
7-89 and 7-90	1
7-91 thru 7-99	0
7-100	1
7-101 thru 7-105	0
7-106	1
7-107 and 7-108	0
8-1	0
8-2 thru 8-4	1
8-5 thru 8-7	0
8-8	1
8-9 thru 8-12	0
8-13	1
8-14 thru 8-28	0
8-29	1
8-30 thru 8-35	0
8-36	1

*Zero in this column indicates an original page.

Page No.	*Change No.
8-37	0
8-38 thru 8-40	1
8-41 and 8-42	0
8-43	1
8-44	0
8-45	1
8-46 thru 8-64	0
9-1 thru 9-6	0
9-7	1
9-8 thru 9-11	0
9-12	1
9-13 thru 9-28	0
9-29 thru 9-33	1
9-34 thru 9-36	0
10-1	1
10-2 and 10-3	0
10-4	1
10-5	0
10-6	1
10-7 thru 10-11	0
10-12	1
10-13 and 10-14	0
10-15 and 10-16	1
10-17	0
10-18 and 10-19	1
10-20 and 10-21	0
10-22	1
11-1 and 11-2	0
11-3	1
11-4 thru 11-6	0
12-1	1
12-2 and 12-3	0
12-4	0
12-5 thru 12-9	0
12-10	1
A-1	1
A-2 blank	0
B-1 thru B-3	0
B-4	1
B-5 thru B-7	0
B-8	1
Glossary 1	0
Glossary 2	1
Index 1 thru Index 38	0

*Zero in this column indicates an original page.

PRECAUTIONARY DATA

Personnel performing instructions involving operations, procedures, and practices which are included or implied in this technical manual shall observe the following instructions. Disregard of these warnings and precautionary information can cause serious injury, death, or an aborted mission

WARNINGS, CAUTIONS, and NOTES are means of attracting attention to essential or critical information in a manual. Definitions are outlined as follows

WARNING: An operating or maintenance procedure, practice, condition, statement, etc., which if not strictly observed, could result in injury to or death of personnel

CAUTION. An operating or maintenance procedure, practice, condition, statement, etc., which, if not strictly observed, could result in damage to, or destruction of, equipment or loss of mission effectiveness or long term health hazards to personnel

NOTE: An essential operating or maintenance procedure, condition, or statement, which must be highlighted.

WARNING

USING SOLVENTS/PAINTS

Standard precautions such as fire prevention and adequate ventilation shall be exercised when using solvents or applying primer and coating

Wear gloves or gauntlets when handling solvents as solvents may cause skin disorders

Do not use drycleaning solvent, Federal Specification P-D-680, near oxygen storage or transfer systems, the combination of these two will form a highly explosive mixture

HANDLING PLASTICS

Wear gloves to protect hands while handling hot plastic Boiling water shall not be used for heating acrylate base plastics.

Provide adequate ventilation when working with Epocast 41 A and hardener 9246, or equivalents as these materials are toxic

HANDLING ACID

Wear protective clothing when mixing acid with water Always pour acid into water, never water into acid

MAGNESIUM ALLOY FIRE

Do not use water or any standard liquid or foam-type fire extinguishers on a magnesium alloy fire, as they may cause an explosion Use dry sand or talcum powder, Federal Specification U-T-30

REMOVING CORROSION

Take precautions to prevent possible dust explosions when removing corrosion from steel alloys. Use goggles or face shield when removing paint or corrosion with a wire brush or by the grinding method

TIRES AND WHEELS

If it is necessary to approach a wheel with a hot brake, do so either from directly in front or directly behind the aircraft

GROUND SUPPORT EQUIPMENT

To prevent accidental falls, appropriate maintenance platforms/safety stands illustrated in appropriate workstand manuals or any other approved locally procured/manufactured safety stands/restraint equipment will be used when working (above 10 feet) on aircraft in a non-tactical environment

Install safety lock when an adjustable-height maintenance platform is in use

Ensure the air hose used with compressed air is safe for the pressure being handled

Release air pressure in air compressor tank before performing maintenance on air compressors

Disconnect power before changing belts on electrically-driven compressors

FIRE EXTINGUISHERS

Monobromotrifluoromethane (CF3Br) is highly volatile, but not easily detected by odor Although nontoxic, CF3Br shall be considered in the same class as other freons and carbon dioxide, i.e., capable of causing danger to personnel primarily by reduction of oxygen available for proper breathing The liquid may cause frostbite or low temperature burns if allowed to come in contact with the skin.

Bromochloromethane (CB) is a narcotic agent of moderate intensity, but of prolonged duration. It is considered less toxic than carbon tetrachloride, methylbromide, or the usual products of combustion Normal precautions should be taken while using bromochloromethane, including the use of oxygen masks

COMPRESSED AIR

Compressed air shall not be used for cleaning purposes except if reduced to less than 30 psi and then only with effective chip-guarding and personal protective equipment.

NOISE HAZARD

Noise levels reached during ground runup of Army aircraft are of a level that may cause permanent hearing loss Maintenance personnel shall wear Army approved hearing protection when working on aircraft with engines in operation.

PROPER USE OF PLATED TOOLS

Use only chrome plated steel or unplated steel tools for disassembly or reassembly procedures described in this manual Use of cadmium or zinc plated tools is not permitted since these platings are prone to chipping and flaking Should these chips or flakes become embedded in aircraft parts, galvanic corrosion will result Should these chips or flakes enter fuel or oil wetted components, they may eventually clog the filter or produce intergranular attack of nickel or titanium base alloys at elevated temperature. All tools regardless of type plating should be serviceable and free of chipping.

SPECIAL INSTRUCTIONS

All equipment must be operated per the manufacturer's operating instructions if unavailable, instructions for the use and care of equipment will be developed Standard Operating Procedures (SOPs) will be prepared and used for all shop operations (refer to AR 385-95) The supporting Safety Office will use their expertise to provide assistance. Guidance for industrial hazards can be found in Code of Federal Regulations, 29 CFR 1910 and Chemical Hazards in NIOSH/OSHA Guidelines for Chemical Hazards

TECHNICAL MANUAL

No. 1-1500-204-23-10

HEADQUARTERS
DEPARTMENT OF THE ARMY
Washington, D.C., 31 July 1992

Aviation Unit Maintenance (AVUM) and Aviation Intermediate Maintenance (AVIM) Manual for General Aircraft Maintenance (Sheet Metal Shop Practices) Volume 10

REPORTING ERRORS AND RECOMMENDING IMPROVEMENTS

You can help improve this manual. If you find any mistakes or if you know of a way to improve the procedures, please let us know. Mail your letter or DA Form 2028 (Recommended Changes to Publications and Blank Forms) or DA Form 2028-2 located in the back of this manual directly to: Commander, US Army Aviation and Missile Command, ATTN: AMSAM-MMC-LS-LP, Redstone Arsenal, AL 35898-5230. You may also submit your recommended changes by E-Mail directly to ls-lp@redstone.army.mil or by fax (256) 842-6546/DSN 788-6546. A reply will be furnished directly to you. Instruction for sending an electronic 2028 may be found at the back of this manual immediately preceding the hard copy 2028.

ENVIRONMENTAL/HAZARDOUS MATERIAL INFORMATION

This document has been reviewed for the presence of Class I Ozone Depleting Chemicals. As of 14 June 1995, the status is: All references to Class I Ozone Depleting Chemicals have been removed from this document by substitution with chemicals that do not cause atmospheric ozone depletion.

Distribution Statement A. Approved for public release; distribution is unlimited.

TABLE OF CONTENTS

		Page
CHAPTER 1	INTRODUCTION	1-1
CHAPTER 2	SHEET METAL SHOP OPERATIONS	2-1
CHAPTER 3	SHOP EQUIPMENT	3-1
CHAPTER 4	AIRCRAFT STRUCTURES	4-1
CHAPTER 5	STRUCTURAL METALS	5-1
CHAPTER 6	FORMING	6-1
CHAPTER 7	RIVETS AND RIVETING TECHNIQUES	7-1
CHAPTER 8	AIRFRAME SHEET METAL REPAIR	8-1
CHAPTER 9	SANDWICH CONSTRUCTION REPAIR	9-1

Page

CHAPTER 10 AIRCRAFT PLASTICS 10-1

CHAPTER 11 REBALANCING MOVABLE SURFACES 11-1

CHAPTER 12 SPOT WELDS 12-1

APPENDIX A REFERENCES A-1

APPENDIX B BLIND RIVET CONVERSION TABLES B-1

GLOSSARY Glossary-1

INDEX Index-1

CHAPTER 1

INTRODUCTION

1-1. Purpose. This volume provides general information pertaining to the repair of aircraft metal structures. The application of techniques and materials on specific aircraft is not covered in this volume. Specific aircraft application and usage are found in the individual aircraft maintenance manuals. This volume is of maximum benefit to the mechanic who desires information about metals, metal-working tools and procedures, and airframe repair techniques This volume furnishes the mechanic a source of information about how to perform various mechanical functions which are used on all aircraft This volume is not a requlsrtlonlng authority, and applicable repair parts and special tools lists should be consulted to obtain the unit of issue and National Stock Number of the items required for maintenance.

1-2. Scope. General information to guide aircraft maintenance personnel is covered in this volume, however, no attempt has been made to include special parts or equipment which are applicable only to individual or special aircraft. Sheet metal shop operations are covered in Chapters 2 and 3. Aircraft structures are discussed in Chapter 4. Information regarding structural metals and the forming of same are presented in Chapters 5 and 6. Chapter 7 covers rivets and riveting techniques, while sheet metal and sandwich construction repair methods are presented in Chapters 8 and 9. Aircraft plastics are discussed in Chapter 10, and balancing of flight control surfaces is presented in Chapter 11. Finally, repair of spot welds is presented in Chapter 12.

1-3. Consumable Materials. Refer to TM 1-1500204-23-6 for consumable materials in this volume.

CHAPTER 2

SHEET METAL SHOP OPERATIONS

2-1. General Shop Rules. The practices and procedures described in thischapter pertain to the manufacturing and repair functions of aviation activities and are applicable to all levels of maintenance. Because of the many types of Army aircraft, each shop within the manufacturing and repair section must, of necessity, have personnel trained in general practices and procedures to the extent that different type and model aircraft do not upset a smooth running shop.

a. Responsibility. All supervisory personnel in the manufacturing section are responsible for a continuing and effective shop safety program. To implement and maintain this program, shop supervisors will utilize bulletin boards, signs, and any other effective method. Shop personnel will cooperate in the shop safety program by making helpful recommendations, and continually exercising care and caution in the operation of all shop equipment. All shop personnel will strive to improve the safety program and be especially alert to observe and correct hazardous conditions and unsafe shop practices. All accidents, no matter how minor, shall be reported to the shop supervisor, and all published instructions regarding safety shall be strictly adhered to. Also, safety engineers and safety officers will ensure that proper safety procedures are adhered to in accordance with AR 385-10, Army Safety Program; AR 385-30, Safety Color Code Markings and Signs; AR 385-32, Protective Clothing and Equipment; The Occupational Safety and Health Act of 1971, OSHA 1910.251; all applicable fire codes, NFPA 410; and other accepted civilian and military safety practices.

b. Shop Housekeeping. Housekeeping is the yardstick by which the shops in the manufacturing section are judged. A clean, well arranged shop is a safe shop and reflects credit on all personnel concerned with its operation. The following shop practices shall be observed:

(1) Oil pans or drip pans shall be used where leaking oil, grease, and similar materials may cause hazardous accumulations on equipment or floors. All spills shall be cleaned up immediately. Approved sweeping compound may be used to remove these materials from the floor.

CAUTION

Floors shall not be cleaned with volatile or flammable liquids. A flammable film may remain and cause a fire hazard.

(2) Floors shall be maintained smooth and clean, free of all obstruction and slippery substances. Holes and irregularities in floors shall be repaired to maintain a level surface free from tripping hazards.

(3) All unnecessary materials on walls shall be removed and projections shall be kept to a minimum.

(4) Aisles shall be clearly defined and kept free of hazardous obstructions. Where possible, aisles shall be suitably marked by painting.

(5) All machines, work benches, aisles, etc., shall be adequately illuminated.

c. Shop Safety. Unsafe equipment and fire hazards are the main factors to be observed while planning safety procedures.

(1) Equipment safety. Unsafe equipment shall be reported immediately. The following equipment safety practices shall be observed:

(a) Machines shall be located to provide operators with sufficient space to handle materials and perform job operations without interference.

(b) Bolt down all machinery that can move or walk due to vibration (drill press, bench grinder, etc.)

(c) Substantial low resistance conductors shall be used to ground all stationary and portable machines, equipment, or other devices in which static charges may be generated, or which require electrical circuits of a hazardous nature.

(d) Shop machinery shall be operated only by qualified personnel observing safe practices.

(e) Safety devices, such as guards, interlocks, automatic releases, and stops, shall always be kept in operating condition.

(f) Ensure that all unauthorized personnel are clear of area before opening valves or energizing electrical circuits for starting machinery.

(g) Suitable mechanical guards, such as enclosures or barricades, shall be permanently installed on all machinery not already equipped with such to eliminate danger of injury from moving parts.

(h) Machinery shall not be adjusted, repaired, oiled, or cleaned while machine is in operation or power is on.

(i) Personnel operating machinery shall wear protective clothing as prescribed. A protective face shield or goggles shall be worn when operating a grinder regardless of whether grinder is equipped with attached shields.

(j) Jewelry shall not be worn while performing any maintenance.

(2) Fire safety. A constant vigilance must be maintained to seek out fire hazards. Fire hazards are constantly present in the shop where sparks, friction, or careless handling can cause an explosion that may destroy equipment or buildings, and injure or kill personnel. Refer to AR 385-10, Army Safety Program and the Occupational Safety and Health Act of 1971. The following fire safety practices shall be observed:

(a) NO SMOKING signs shall be placed in areas where smoking could create a fire hazard.

(b) Personnel shall be trained in the use, knowledge, and location of shop fire fighting equipment.

(c) Each shop shall be equipped with fire extinguishers suited for type of fire most likely to occur.

(d) Use correct fire extinguisher for class of fire as follows:

- Class A fire (wood, paper, trash, etc.) Use water or soda-acid fire extinguisher.
- Class B fire (oil, paint, fuel, grease, etc). Use bromotrifluoromethane or carbon dioxide fire extinguisher.
- Class C fire (electrical equipment). Use bromotrifluoromethane or carbon dioxide fire extinguisher.
- Class D fire (combustible metals) magnesium, titanium, zirconium, sodium, lithium, and potassium. Use dry powder type fire extinguisher.

(e) Oily waste, rags, and similar combustible materials shall be discarded in self-closing metal containers which shall be emptied daily.

(f) Flammable materials shall not be stored in the shop.

(g) Use only approved cleaning solvents.

d. Shop Tools and Materials. Handling tools and materials require observance of the following common safety practices:

(1) Do not leave tools or objects in elevated positions from which they can fall or be knocked off.

(2) Do not point a compressed airstream toward any part of the body.

(3) All unserviceable tools will be plainly marked and removed from service.

(4) Electrical cablesand air hoses to portable units will be laid out so there is no danger of tripping.

(5) Electrical tools must be connected to a low resistance ground.

(6) Keep bench tops covered with material hard enough to prevent chips and other foreign material from becoming imbedded. Keep bench tops clean and free from chips and filings.

(7) Keep vise jaws covered with soft metal jaw caps.

2-2. Shop Equipment. Refer to Chapter 3 for complete information on sheet metal shop equipment.

CHAPTER 3

SHOP EQUIPMENT

3-1. General. Shop equipment used in repair and manufacturing of sheet metal parts consists of cutting machines, hand tools, and forming machines. The following are general descriptions and maintenance procedures for this equipment. For specific information, refer to the applicable technical manual for each piece of equipment.

3-2. Maintenance. The maintenance of machinery and shop equipment shall be divided into the following classes: operator maintenance and major repair.

a. Operator Maintenance. Operator maintenance consists of cleaning, lubrication, and minor adjustment of belts, guards, gibs, etc. It also includes periodic visual inspection to preclude possible damage, failure, or breakdown due to loose or excessively worn parts, defective wiring connections, insulation, safety appliances, etc.

b. Major Repair. Major repair consists of all repair work not performed by operators. Major repair within the scope of facilities shall be accomplished locally. Repairs not within the scope of local faculties shall be accomplished through a work order to direct support or a commercial contractor.

c. Storage of Tools. Equipment. and Materials. The manufacturing section should have the following facilities to properly maintain shop equipment.

- Racks for storage of various metals used for manufacturing. Design of racks should allow easy identification of stock
- Racks for dispensing materials issued in rolls
- Storage bins for items of high value designed so items are secure when stored.
- Tool crib for storing of moderately high value tools which would normally be issued only when work projects require their use.
- Bins for storing incoming repairable items and outgoing serviceable items.

3-3. Non-Powered Metal Cutting Machines. The following non-powered metal cutting machines are common to the sheet metal shop. Detailed operation can be found in the applicable manuals.

a. Squaring Shears. Squaring shears provide a convenient means of cutting and squaring metal. These shears shown in figure 3-1 consist of a stationary lower blade attached to a bed and a movable upper blade attached to a crosshead. To make the cut, the upper blade is moved down by placing the foot on the treadle and pushing downward.

(1) Safety practices. The blade on a squaring shear is extremely sharp. Therefore, extreme care must be taken to ensure that hands are not near the blade when the treadle is actuated

(2) Operation. Three different operations can be performed on the squaring shears: cutting to a line, squaring, and multiple cutting to a specific size.

(a) Cutting to a line When cutting to a line, the sheet is placed on the bed of the shears. In front of the cutting blade with the cutting line directly even with

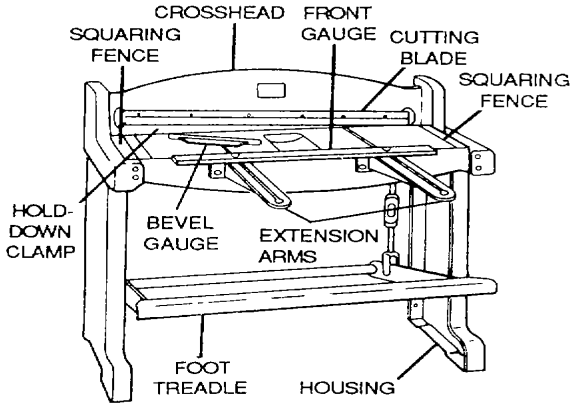

Figure 3-1. Squaring Shears

the cutting edge of the bed. The sheet is cut by stepping on the treadle while the sheet is held securely in place by the holddown clamp.

(b) Squaring. When squaring a sheet, one edge is placed square to the edge, usually with the aid of the squaring fence. Then the remaining edges are squared by holding one squared end of the sheet against the squaring fence and making the cut, one edge at a time, until all edges have been squared

(c) Multiple cutting. When several pieces must be cut to the same dimensions, use the gauge which is on most squaring shears. The supporting rods are graduated in fractions of an inch, and the gauge bar may be set at any point on the rods. Set the gauge at the desired distance from the cutting blade of the shears and push each piece to be cut against the gauge bar. All the pieces can then be cut to the same dimensions without measuring and marking each one separately.

(3) Maintenance. Refer to the applicable maintenance manual for servicing, inspection, and maintenance instructions

b. Scroll Shears. Scroll shears, sometimes called unishears, are used for cutting irregular lines on the inside of a sheet without cutting through to the edge. They may be used in the manufacture of rings and washers, for example. The maximum capacity for these shears is usually 14-gauge mild steel. Portable and pedestal models are available. Figure 3-2 shows a typical example

(1) Safety practices. The cutting blade on scroll shears is extremely sharp. Care must be taken to avoid the area of the blade when the unit is being operated.

(2) Operation. The upper cutting blade is stationary, while the lower blade is movable. The lower blade is controlled by a handle connected to it.

(3) Maintenance. Refer to the applicable maintenance manual for servicing, inspection, and maintenance of scroll shears.

c. Throatless Shears. Throatless shears are used to cut 10-gauge mild carbon steel and 12-gauge stainless steel. As shown in figure 3-3, the shear gets its name from its construction; it has no throat. Since there are no obstructions, any size sheet can be cut, and the metal can be turned in any direction to allow for cutting irregular shapes.

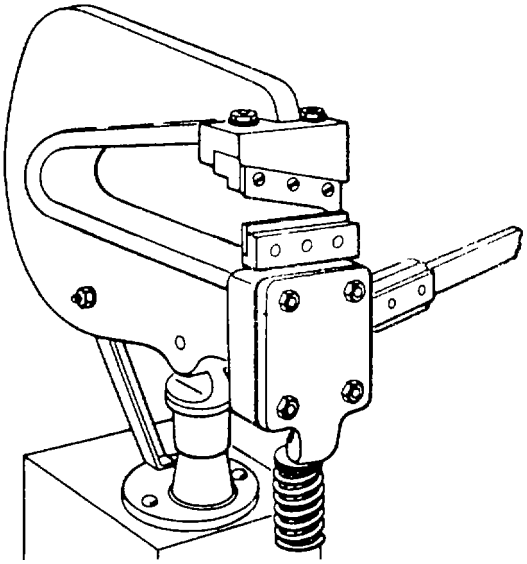

Figure 3-2. Scroll Shears

(1) Safety practices. As with other shears, the blades on throatless shears are extremely sharp. Keep clear of the blades when operating this equipment.

(2) Operation. The top blade is moved by a lever.

(3) Maintenance. Refer to the applicable maintenance manual for servicing, inspection, and main- tenance of throatless shears.

d. Rotary Punch. The rotary punch shown in figure 3-4 is used in the shop to punch holes in metal parts. This machine can be used for cutting radii in corners, for making washers, and for many other jobs where holes are required. The machine is composed of two cylindrical turrets, one mounted over the other and supported by the frame. Both turrets are synchronized so that they rotate together, and index pins assure correct alignment at all times.

(1) Safety practices. Keep fingers away from the area between the turrets, which is where the dies and punches meet to punch the holes

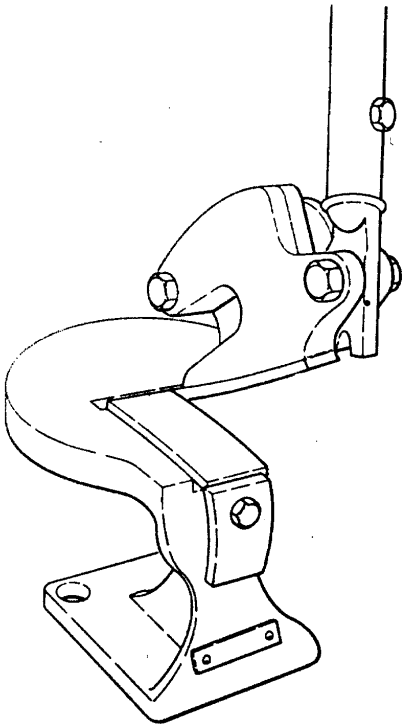

Figure 3-3. Throatess Shears.

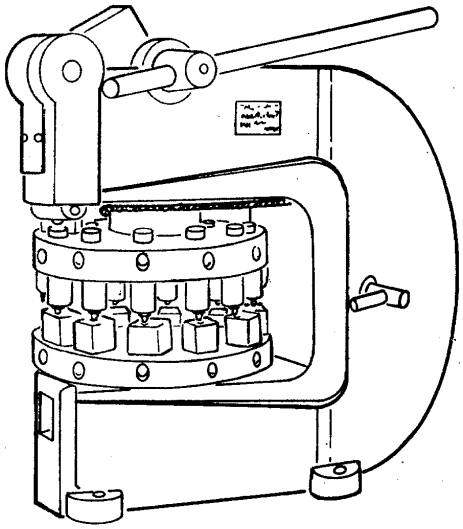

Figure 3-4. Rotary Punch

(2) Operation.. The diameter of the punch is stamped on the front of each die holder. After the size of the hole is selected, place the metal to be worked between the die and punch. Actuate the lever on top of the machine. This will force the punch through the metal. When the lever is returned to its original position, the metal is removed from the punch.

(3) Maintenance. Refer to the applicable maintenance manual for servicing, inspection, and maintenance of rotary punches.

3-4. Hand Tools and Devices. The following tools and devices are common to sheet metal shops.

a. Micrometers. Micrometers are used to measure thickness of metal sheets or diameters of cylindrical stock or tubes. An example of a micrometer is shown in figure 3-5.

b. Radius Gauge. The radius gauge shown in figure 3-6 has leaves on which one side is curved. The curve has a specific radius which is marked on each leaf. The gauge is used to determine the radius of a curve by selecting the leaf that corresponds to the surface being measured.

c. Sheet Metal Holders. Several types of holding tools are used when working sheet metal (including sheet metal screws). The type of operation being performed and the type of metal being used determine what holding tools should be used.

(1) Cleco fastener. Cleco fasteners are widely used to hold metal and to keep drilled parts made of sheet metal stock pressed tightly together to prevent them from slipping or separating while being riveted or fastened. The cleco fastener is available in six different sizes: 3/32, 1/8, 5/32, 3/16, 1/4, and 3/8 inch. The size is stamped on the fastener. Figure 3-7 shows the cleco fastener and its holding feature.

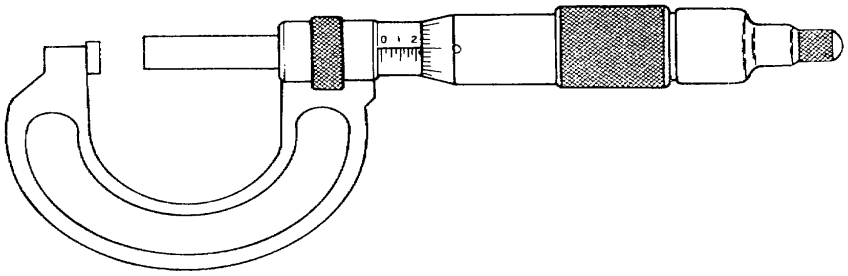

Figure 3-5. Micrometer

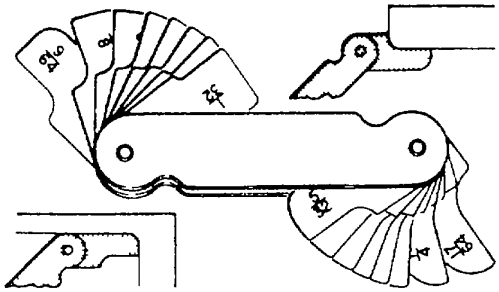

Figure 3-6. Radius Gauge

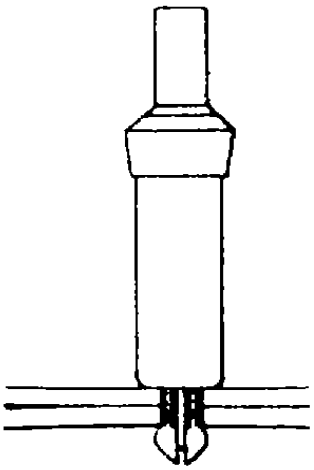

Figure 3-7. Cleco Fastener

(2) Cleco fastener pliers. Cleco fastener pliers as shown in figure 3-8 are used to insert the cleco fastener. One pair of pliers will fit all six sizes of fasteners.

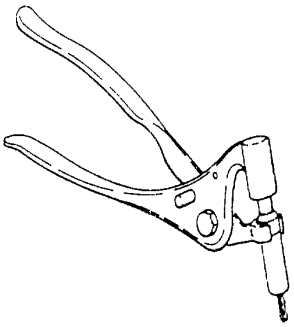

Figure 3-8. Cleco Fastener Pliers

(3) Clamp pliers. Clamp pliers shown in figure 3-9 are used to hold sheets of metal together. Clamp pliers can be used to bend sheet metal, lock templates to blank sheets, and hold metal for welding. The grip can be adjusted for different metal thickness by turning the thumbscrew in the end of the handle.

d. *Hand Shears*. These shears can be used to cut metal up to 20 gauge in thickness. They come in various shapes and sizes. There are two basic types for welding, to bend sheet metal of hand shears Straight (or regular) for straight cutting, as shown in figure 3-10, and the curved type for making small circular cuts The better grade of hand shears have tapered blades with inlaid

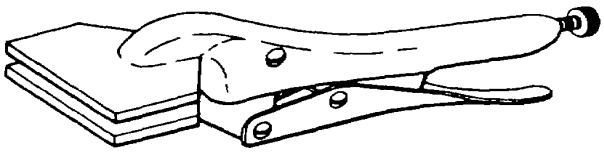

Figure 3-9. Clamp Pliers

steel cutting edges. The grips of the shears, often called bows, are shaped to fit the hand and centered to give a maximum amount of leverage for cutting.

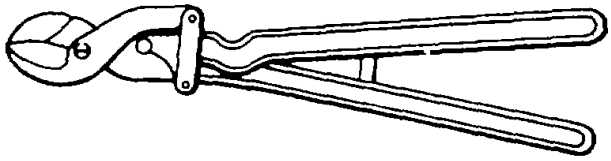

Figure 3-10. Hand Shears .

e. *Bench Shears.* Bench shears are shown in figure 3-11. These shears are designed for cutting the thicker metals (20 to 16 gauge). The lower shank fits into a bench plate, while the upper shank can be raised and lowered by hand to cut the metal.

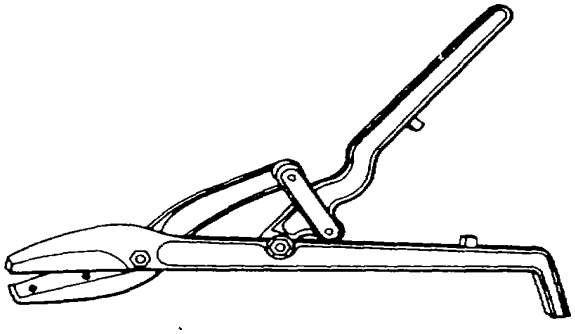

Figure 3-11. Bench Shears

f. *Aviation Snips.* Figure 3-12 shows an example of aviation snips. These snips are specially designed to cut heat-treated aluminum alloy and stainless steel. They can also be used to enlarge small holes. Their blades have small teeth on the cutting edges and are designed for cutting very small circles and irregular shapes. The handles are of the compound-leverage type, which enables the snips to cut material as thick as 0.051 inch. Two kinds of aviation snips are available: those that cut from right to left, or from left to right. When cutting, place the upper blade of the snips on the line to be followed and keep it perpendicular to the surface of the metal. The waste metal should curl up along the upper edge of the lower blade. Take the following precautions when using aviation snips.

CAUTION

- **Never use snips as pliers or wire cutters.**
- **Never use snips to cut materials thicker than 0.051 inch because such misuse can spring their blades and make them useless.**

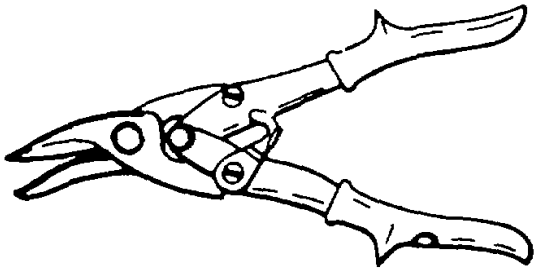

Figure 3-12. Aviation Snips

g. *Straight Snips.* Shown in figure 3-13, these snips are made to be used by both right-handed and left-handed persons. They are used to cut sheet stock along straight lines or along circles of large diameters.

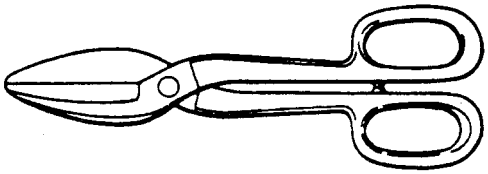

Figure 3-13. Straight Snips

h. *Circle Snips.* Shown in figure 3-14, these snips have curved blades and are designed for cutting small inside and outside circles and scrolls. Before the circle snips can be used to cut an opening in the sheet of metal to allow a circle to be cut, a starting hole must first be drilled inside the outline of the desired circle.

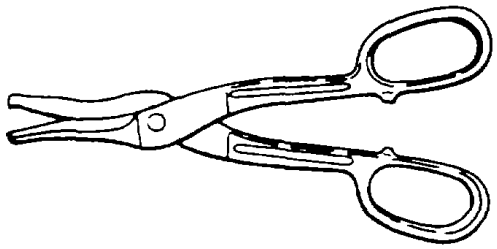

Figure 3-14. Circle Snips

i. *Countersinks.* Countersinks are used to enlarge a portion of a drilled hole to a predetermined angle. Figure 3-15 shows the two varieties of countersinks: standard and stop-countersinks. With the standard countersink, the user determines the depth of the hole. The stop-countersink can only go as far as a preset depth.

j. *Punches,* Punches are named according to their shape and are designed for various purposes.

(1) *Prick punch.* A prick punch shown in figure 3-16 is used to place reference marks on metal. They are also often used to transfer dimensions from a paper pattern directly onto the metal. The following precautions should be taken when using a pnck punch:

- Never strike a prick punch a heavy blow with the hammer because it could bend the punch or cause excessive damage to the material being worked.
- Do not use a prick punch to remove objects from holes because the point of the punch will spread the object and cause it to bind even more..

(2) *Center punch.* A center punch shown in figure 3-17 is used to make large indentations in metal of the kind needed to start a twist drill. This punch has a heavier body than the prick punch and its point is ground to an angle of about 60 degrees. The following precautions should be taken when using a center punch:

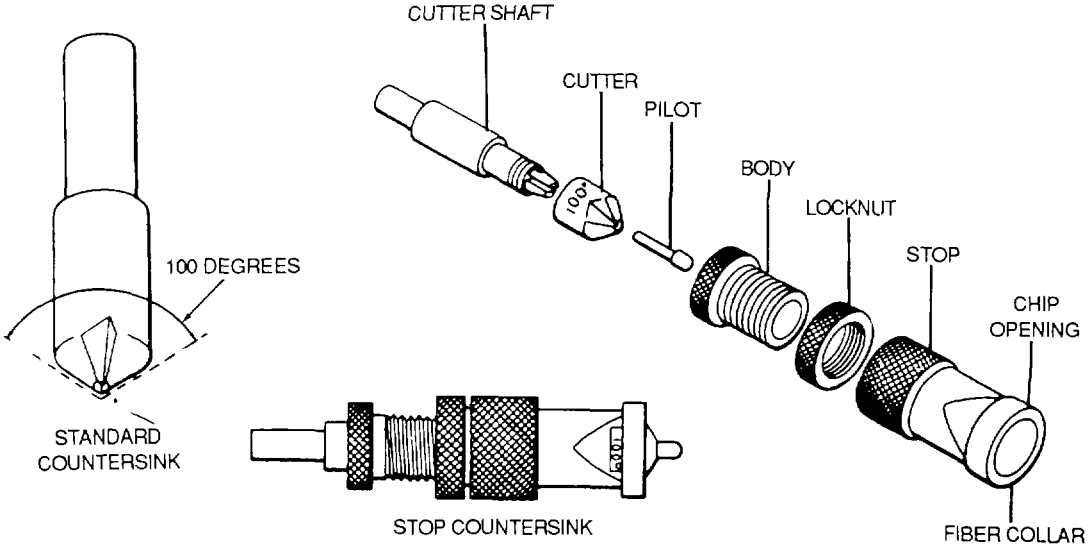

Figure 3-15. Countersinks

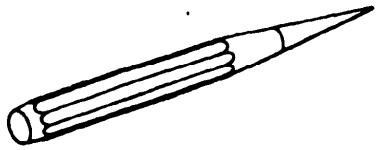

Figure 3-16. Prick Punch

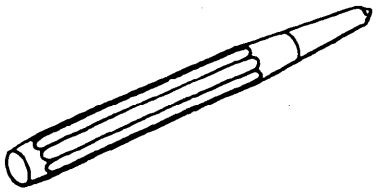

Figure 3-17. Center Punch

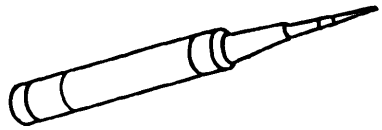

Figure 3-18. Automatic Center Punch

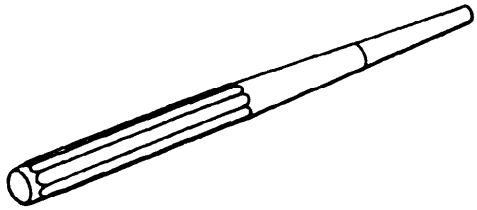

Figure 3-19. Drive Punch

CAUTION

Never strike the center punch with enough force to dimple the material around the indentation or cause the metal to protrude through the other side of the sheet.

Like the prick punch and for the same reason, a center punch must never be used to remove objects from holes.

(3) Automatic center punch. The automatic center punch shown in figure 3-18 is used only to indent metal to make starting points for twist drills. It contains an inside mechanism that automatically strikes a blow of the required force when the user places the punch exactly where he wants it and pushes it by pressing on it with his hand. This punch has an adjustable cap for regulating the stroke; the point can be removed for regrading or replacement. Never strike an automatic center punch with a hammer.

(4) Drive punch. The drive punch shown in figure 3-19 is often called a taper punch. It is used to drive out damaged rivets, pins, and bolts, which sometimes bind in holes. Therefore, the drive punch is made with a flat face instead of a point. The size of the punch is determined by the width of the face, usually one-eighth to onequarter inch.

(5) Pin punch. A pin punch shown in figure 3-20 is also often called a drift punch. It is similar to a drive punch and is used for the same purpose. The difference between the two is that the shank of a drive punch is tapered all the way to the face, while the pin punch has a straight shank. Pin punch points are sized in thirty-seconds of an inch and range from one-sixteenth to three-eights inch in diameter. The usual method for driving out a pin or bolt is to start working it out with a drive, punch, which is used until the shank of the punch is touching the sides of the hole. A pin punch is then used to drive the pin or bolt the rest of the way out of the hole. Pins and bolts or rivets that are hard to dislodge may be started by placing a thin piece of scrap copper, brass, or aluminum directly against the pin and then striking it with a heavy hammer until it begins to move.

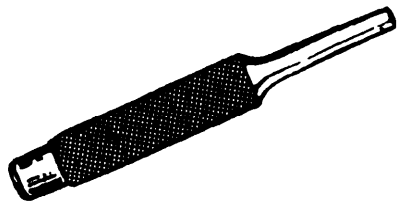

Figure 3-20. Pin Punch

(6) Transfer punch. The transfer punch shown in figure 3-21 is used to transfer the holes through the template or patterns to the material. This punch is usually about 4 inches long. Its point is tapered at the back and then turns straight for a short distance to fit the drill-locating hole in a template. The tip ends in a point like that of a prick punch.

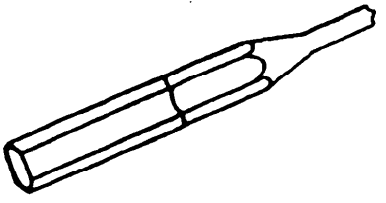

Figure 3-21. Transfer Punch

k. Forming Blocks. Forming blocks are used to hold and support metal when forming. These are mostly made of wood, but sometimes metal. Sandbags can also be used.

(1) V-blocks. A typical V-block is shown in figure 3-22. They are widely used in airframe metalwork for shrinking and stretching metal, especially angles and flanges. The size of the block depends on the work to be done and on the repairman' s judgment or personal preference. Maple and ash are recommended for the best results when working with aluminum alloys, but any other hardwood is suitable. Aluminum and phenolic may also be used to make V-blocks.

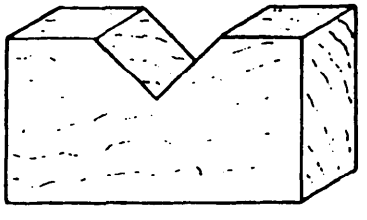

Figure 3-22. V-Block

(2) Forming blocks. Hardwood forming blocks can be constructed to duplicate almost any part of an aircraft, whether structural or nonstructural. The wooden block or form shown in figure 3-23 is shaped to match the exact dimensions and contour of the original part to be formed. When making these blocks, the rough work is done with ordinary woodcutting saws, chisels, gouges, files, and rasps, and the final smoothing is done with sandpaper. Because the form must be accurate, several templates must be prepared to allow the form to be tested for accuracy at frequent intervals. If the forms are to be used over time, several coats of shellac should be applied to the blocks to keep them from checking, cracking, or shrinking.

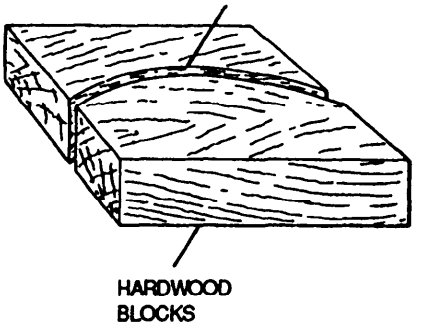

Figure 3-23. Forming Blocks

(3) Sandbags. A sandbag, as shown in figure 3-24, can be used to provide support during the bumping process.

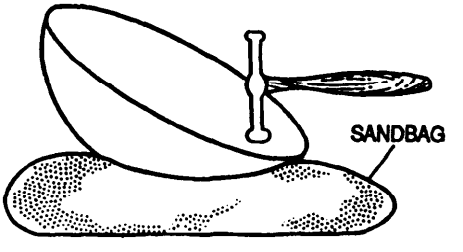

Figure 3-24. Sandbag

l. Dolly Blocks and Stakes. Sheet metal is often formed or finished (planished) over variously shaped anvils called dollies and stakes. These are used for forming small, odd-shaped parts, or for putting on finishing touches for which a large machine may not be suited. Dollies are meant to be held in the hand, whereas stakes are designed to be supported by a flat cast iron bench plate fastened to the workbench as shown in figure 3-25.

m. Types of Stakes. Stakes are special kinds of dolly blocks. They have various finished shapes and are used with a bench plate in different metal-forming and

supporting operations The following types of stakes are used by the airframe repairman, see figure 3-26.

(1) Square stakes. Three varieties of square stakes are used for general sheet metal-forming work common, bevel-edge, and coppersmith. The common square stake is squared off on all ends. The bevel-edge stake is offset to allow more varied applications The coppersmith stake has three square sides and one rounded side These are ten most commonly used stakes in aircraft structural repair shops

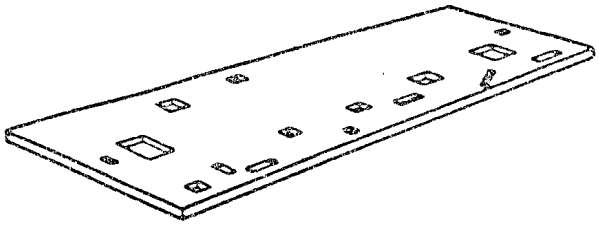

Figure 3-25. Bench Plates

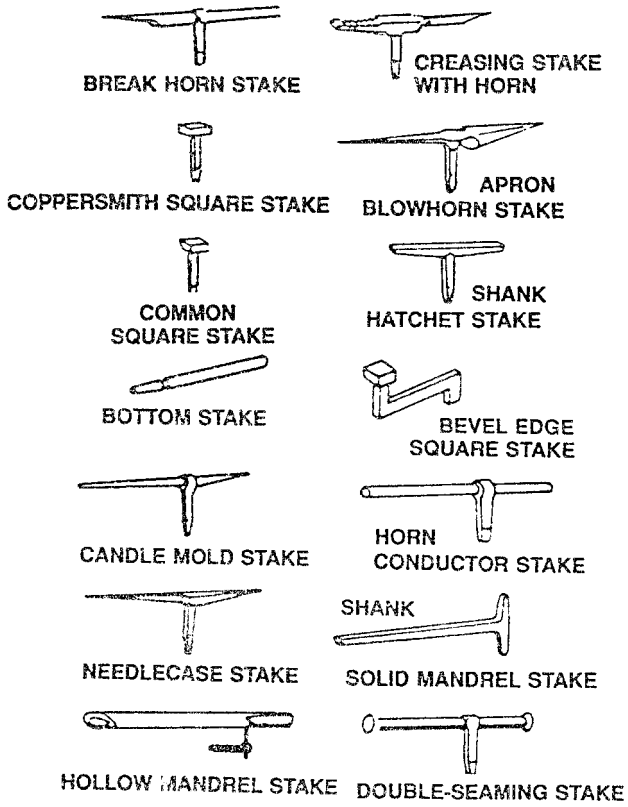

Figure 3-26. Stakes

(2) Double-seaming stakes. There are two vanities of this type simple and four-head stakes.

(a) Simple. The simple double-seaming stake is used as a support when laying down double seams on small cylindrical objects. This stake has two horns with elongated heads.

(b) Four-head. The four-head, double-seaming stake is suitable for all kinds of riveting and for double-seaming large objects. It has two shanks and four interchangeable heads, allowing it to be used in several different positions and conditions.

(3) Roundhead stake. This stake has a curved head that makes it suitable for forming objects of curved and irregular shape. However, this stake is not used extensively.

(4) Bottom stake. This stake is used in dressing down an object with a burred or flange circular bottom. This stake has a flared end.

(5) Needle case stake. This stake has a round, tapered horn on which small rings and tubular objects can be formed and a heavier rectangular horn on which square work can be formed.

(6) Conductor stake. This stake is used for forming, seaming and riveting pipes and elbows, especially those with small diameters. It has two cylindrical horns of different diameters.

(7) Candle mold stake. This stake has a horn of rather large diameter on one end for general-purpose use and a long, tapered horn on the other end for use in reshaping and tube forming.

(8) Hatchet stake. This stake is used for making straight bends, for folding and bending edges, and for flanging and dovetailing. This stake has a beveled horizontal bar

(9) Creasing stake. This stake has a tapered horn on one end for shaping conical objects and a creased mandrel on the other end that permits bending, wiring, and turning.

(10) Beakhorn stake. This stake has a round, tapered horn on one end and a square, tapered horn on the other, which makes it suitable for general sheet metal work and shaping, and for riveting round and square objects.

(11) Blowhorn stake. This stake has a tapered end, called an apron, used for shaping objects that taper abruptly, such as funnels. The other end of the stake is round and has a long, narrow taper for forming slightly tapered objects. This taper can also be used to form metal or wire into rings with small diameters.

(12) Solid mandrel stake This stake is generally used for riveting, forming and seaming square or rectangular objects. These stakes are available in 30-, 34 1/2-, and 40-inch lengths. Each stake has a double shank on one end.

(13) Hollow mandrel stake. This stake has a square section at one end and a rounded mandrel on the other, which makes it suitable for leveling, forming, and seaming. It also has a large bolt inside a slot on the lower side that allows the stake to slide and enables it to be fastened securely on the bench in any desired position. The hollow mandrel stake comes in overall lengths varying from 40 to 60 inches.

b. Care. Most stakes have machined, polished, and hardened surfaces. Stakes should not be used to back up material when using a chisel or any similar cutting tool because this will mar their surfaces and make them useless for finishing work

3-5. Powered Metal Cutting Machines. As with all other phases of manufacturing, powered tools have been developed to increase productivity and ease in the sheet metal shop. Several of the more common powered metal-cutting tools are discussed here

a. Safety. Many dangers are present during use of these tools in applications such as drilling or grinding where flying metal particles are generated, always wear safety glasses or goggles. When work is located in the vicinity of flammable materials, and such tools are available, use pneumatic tools instead of electric, to reduce the possibly of a fire started by a spark. If pneumatic tools are not available, every effort should be made to relocate the work to a safe area

b. Ketts Saw. Figure 3-27 shows the electrically operated, portable, circular-cutting Ketts saw.

(1) Operation. The Ketts saw uses blades of vanous diameters. The head of this saw can be turned to any desired angle, and is very handy for removing damaged sections on a stringer. Advantages of a Ketts saw are:

- The ability to cut metal up to 3/16 in. thick

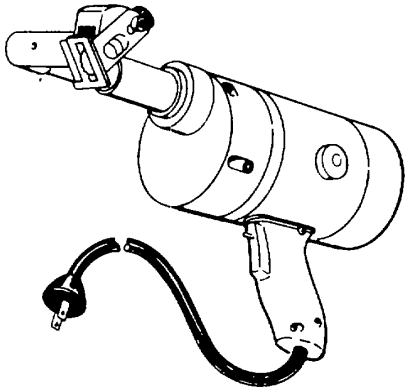

Figure 3-27. Ketts Saw

- No starting hole is required
- A cut can be started anywhere on a sheet of metal
- The capability of cutting an inside or outside radius.

NOTE
To prevent grabbing, keep a firm grip on the saw handle at all times

(2) Maintenance. Before installing a blade, it should be checked carefully for cracks. A cracked blade can fly apart and perhaps result in serious injury.

c. Reciprocating Saw. Figure 3-28 shows a portable, air-powered reciprocating saw.

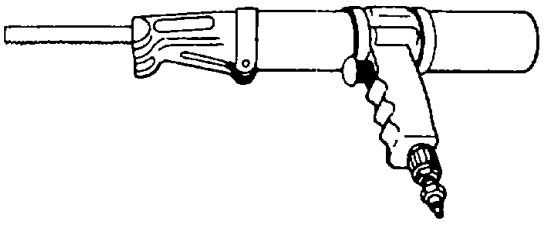

Figure 3-28. Reciprocating Saw

CAUTION

Avoid applying too much downward pressure on the saw handle because the blade may break

(1) Operation. The reciprocating saw has a gun-type shape for balancing and ease of handling and operates most effectively at an air pressure of from 85 to 100 psi. The reciprocating saw uses a standard hacksaw blade and can cut a 360-degree circle or a square or rectangular hole. This saw is easy to handle and safe to use. A reciprocating saw should be used in such a way that at least two teeth of the saw blade are cutting at all times.

(2) Maintenance. Maintenance of the reciprocating saw primarily consists of changing the blade. Refer to the applicable technical manual for inspection, servicing, and maintenance procedures.

d. Band Saw. A band saw, as shown in figure 3-29, is used in repair and replacement of aircraft fittings which are made from plates too heavy to be stamped out or cut by shears. It is also used to advantage when a number of similar parts are to be cut from sheet stock. Blade type and tooth spacing vary with the type of material to be cut. Refer to the applicable maintenance manual for proper blade type

(1) Operation. For most types of work, high blade speeds are desirable with a speed range from 1,500 to 5,000 feet per minute. The band saw blades must be well supported by side rollers and back support both immediately below the saw table and about 2 or 3 inches above the work. The top blade supports are placed slightly in advance of those below the tables and the blade should be allowed to vibrate freely to eliminate excessive saw breakage. As a general rule, a noisy band saw is cutting more efficiently than the saw that cuts quietly. Quiet smooth cutting band saws usually produce smooth burnished surfaces accompanied by excessive heat and consequently decreased blade life.

(2) Maintenance . Refer to the applicable maintenance manual for maintenance on the type band saw being used.

e. Drills and Drill Presses. One of the most common operations in airframe metalwork is that of drilling holes for rivets and bolts. This operation is not difficult, especially on light metal Once the fundamentals of drills and their uses are learned, a small portable power drill is usually the most practical machine to use. However,

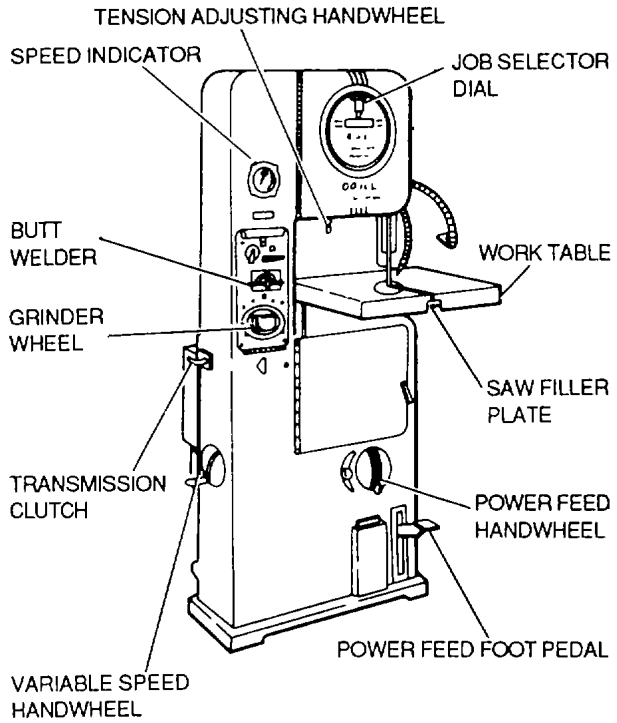

Figure 3-29. Contour Band Saw.

there will be times when a drill press may prove to be the better machine for the job

(1) Portable drills. Portable power drills are powered by electricity or air. Pneumatic drills are recommended for use on projects around flammable materials where sparks from an electric drill might become a fire hazard. Figure 3-30 shows various types and configurations of portable drills.

(a) Operation. General operating procedures are as follows:

WARNING

Always wear safety goggles when drilling Failure to comply may result in serious bodily injury

1 The drill bit should be inserted in the chuck and tested for trueness or vibration. This may be visibly checked by running the motor freely. A drill bit that wobbles or is slightly bent should not be used since such a condition will cause enlarged holes.

2 When using the portable drill, hold it firmly with both hands. Before drilling, be sure to place a backup block of wood under the hole to be drilled to add support to the metal.

3 The drill should always be held at right angles to the work regardless of the position or curvatures. Tilting the drill at any time when drilling into or withdrawing from the material may cause elongation of the hole.

4 When drilling through sheet metal, small burrs are formed around the edge of the hole. Burrs must be removed to allow rivets or bolts to fit snugly and to prevent scratching. Burrs may be removed with a bearing scraper, countersink, or a twist drill larger than the hole. If a drill or countersink is used, it should be rotated by hand.

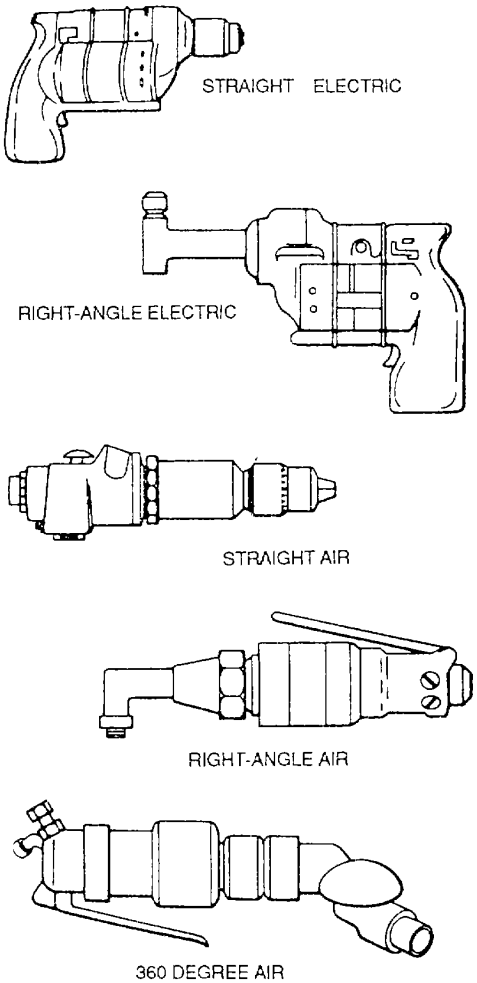

Figure 3-30. Portable Power Drills

(b) Maintenance. Procedures for inspection, servicing, and maintenance of portable, powered hand drills are contained in their appropriate technical manuals.

(2) Dnll press. The drill press is a precision machine used for drilling holes that require a high degree of accuracy. It serves as an accurate means of locating and maintaining the direction of a hole that is to be drilled and provides the operator with a feed lever that makes the task of feeding the drill into the work an easy one. The most common type is the upright drill press shown in figure 3-31.

(a) Operation. The following are general procedures for operation of the drill press

1 When using a drill press, the height of the drill press table is adjusted to accommodate the height of the part to be drilled.

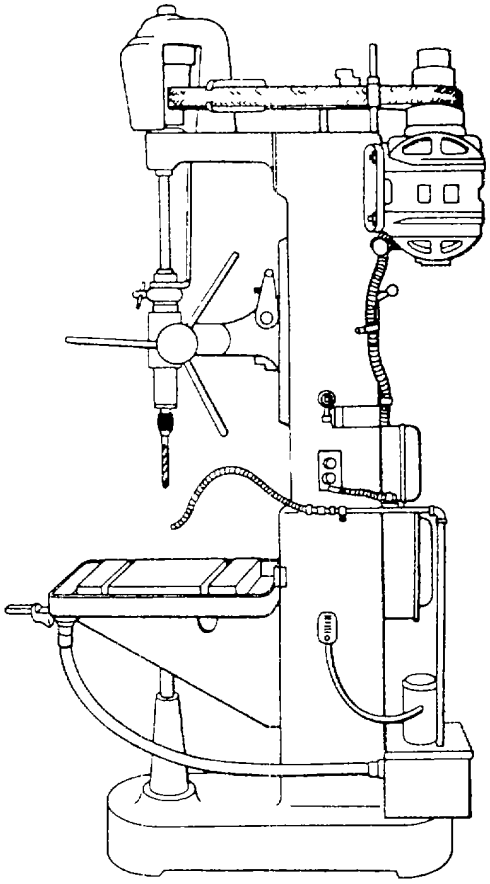

Figure 3-31. Dress Press

2 After the table is properly adjusted, the part is placed on the table and the drill is brought down to aid in positioning the metal so that the hole to be drilled is directly beneath the point of the drill.

WARNING

Parts not properly clamped may bind on the drill and start spinning, causing the loss of fingers or hands or serious cuts on the operator' s arms or body. Always make sure the part to be drilled is properly clamped to the drill press table before starting the drilling operation.

3 The part is then clamped to the drill press table to prevent it from slipping during the drilling operation.

CAUTION

Be careful never to use the sleeve-clamping vise to remove a drill since this may cause the sleeve to warp.

4 Once the part is securely clamped, the drilling operation can commence.

(b) Maintenance. The degree of accuracy that it is possible to attain when using the drill press will depend to a certain extent on the condition of the spindle hole, sleeves, and drill shank. Therefore, special care must be exercised to keep these parts clean and free from nicks, dents, or warpage. Always be sure that the sleeve is securely pressed into the spindle hole.

f. Grinding and Sanding Machines There are two basic types of grinders:: bench type and a pedestal type. These grinders consist of an electric motor with a grinding wheel attached to each end of the motor shaft. One wheel is coarse, for rough work; the other is fine and is used for sharpening purposes. A typical bench grinder is shown in figure 3-32.

(1) Operation. The grinder can be used to dress mushroomed heads on chisels, and points on chisels, screwdrivers, and drills. It can be used for removing excess metal from work and smoothing metal surfaces.

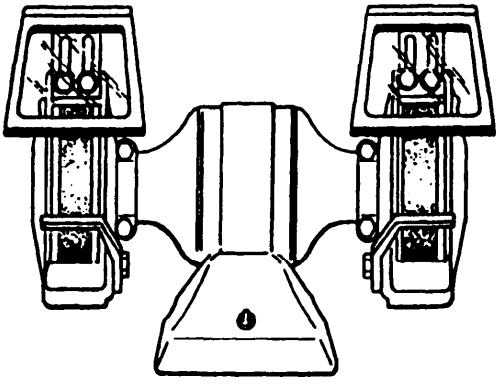

Figure 3-32. Bench Grinder

WARNING

Always wear safety goggles when using grinder. Failure to comply may result in serious bodily injury.

Ensure that the abrasive wheels are firmly attached to the spindles by the flange nuts. If a wheel should loosen or detach, serious bodily injury could result.

Ensure that tool rests are firmly in place. A loose tool rest could cause the tool or piece of work to be grabbed by the wheel and cause the operator' s hand to contact the wheel. Serious bodily injury may result.

(a) Use of abrasive wheels. The bench grinder is generally equipped with one mediumgrain and one fine-grain abrasive wheel. The medium-grain wheel is usually used for rough grinding where a considerable quantity of material is to be removed or where a smooth finish is unimportant. The fine-grain wheel is usually used for sharpening tools and grinding to close limits because it removes metal more slowly, gives the work a smooth finish, and does not generate enough heat to anneal the edges of cutting tools. When it is necessary to make a deep cut on work or to remove a large amount of metal, it is usually good practice to grind with the medium-grain wheel first and then finish up with the fine-grain wheel.

(b) Use of othertypes of wheels. The grinding wheels are removable, and the grinders are usually designed so that wire brushes, polishing wheels, or buffing wheels can be substituted for the abrasive wheels.

(c) Use of side of wheel. As a rule, it is not good practice to grind work on the side of an abrasive wheel. When an abrasive wheel becomes worn, its cutting efficiency is reduced because of a decrease in surface speed. When a wheel becomes worn in this manner, it should be discarded and a new one installed.

(d) Use of water. Some grinders are equipped with water pumps which pump a steady stream of water over the work. When grinder is not equipped with a water pump, the work should be immersed in water often enough to prevent overheating. Under no condition shall the wheel, when used in wet grinding, stand partially immersed in water. This will cause the water-soaked portion of the wheel to become heavy and the wheel to become thrown out of balance.

(e) Grinding soft materials. Do not grind soft materials such as aluminum or brass as these materials will clog the pores of the grinding wheel and stop its cutting action. A clogged or glazed wheel should be dressed to obtain proper cutting action.

(2) Maintenance. General maintenance of grinders consists of wheel installation, dressing, and inspection before use.

(a) Installation. Installation of a grinding wheel on a grinder is as follows:

NOTE

Do not use a metallic object for testing soundness of a grinding wheel.

1 Test wheel for soundness before installation by holding wheel and tapping it with a piece of wood. A sound wheel will emit a dull ring.

2 Place blotting between wheel and wheel flanges. Wheel flanges should be of ample size.

3 Place wheel on arbor and tighten spindle nut so flanges hold wheel securely.

NOTE

Do not over-tighten spindle nut as cracking of grinding wheel may result.

4 Test grinding wheel for breakage, after installing, by permitting grinder to run for a few minutes.

(b) Dressing. Grinding wheels shall be dressed as follows in order for them to run true:

1 Place wheel dresser against wheel and move back and forth while grinder is running until wheel is trued.

2 When using wheel dresser, hold dresser against grinding wheel firmly enough to prevent sparks.

(c) Inspection before use. Be sure to check the abrasive wheel for cracks before using the grinder. A cracked abrasive wheel is likely to fly apart when turning at high speeds. Never use a grinder unless it is equipped with wheel guards.

3-6. Metal Forming Machines. Forming machines can be either hand-operated or power-driven. Small machines are usually hand-operated, whereas the larger ones are power-driven. Straight-line machines include such equipment as the bar folding machine and the cornice brake. Rotary machines include the slip roll former. The slip roll former can also be power-driven.

a. Bar Folding Machine. The bar folder shown in figure 3-33 is designed for use in making bends or folds along edges of sheets. This machine is best suited for folding small hems, flanges, seams, and edges to be wired. Most bar folders have a capacity for metal up to 22 gauge in thickness and 42 inches in length.

(1) Operation. General procedures for using the bar folding machine are as follows:

(a) Before using the bar folder, the following adjustments must be made for thickness of material, width of fold, sharpness of fold, and angle of fold.

1 The adjustment for thickness of material is made by adjusting the screws at each end of the folder. As this adjustment is made, place a piece of metal of the desired thickness in the folder and raise the operating handle until the small roller rests on the cam.

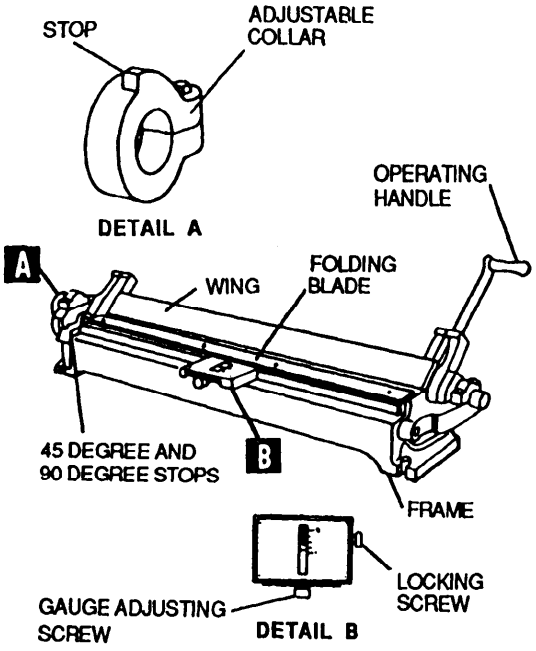

Figure 3-33. Bar Folding Machine

2 To adjust the width, hold the folding blade in this position and adjust the setscrews so that the metal is clamped securely and evenly the full length of the folding blade. After the folder has been adjusted, test each end of the machine separately with a small piece of metal by actually folding it.

3 To adjust sharpness and angle, there are two positive stops on the folder, one for 45-degree folds or bends and another for 90-degree folds or bends. An additional collar is provided and can be adjusted to any degree of bend within the capacity of the machine. For forming angles of 45 degrees or 90 degrees, the correct stop is moved into place. This will allow the handle to be moved forward to the correct angle. For forming other angles, the adjustable collar shown in detail A of figure 3-33 is used. This is accomplished by loosening the setscrew and setting the stop at the desired angle. After setting the stop, tighten the setscrew and complete the bend.

(b) To make the fold, adjust the machine correctly and then insert the metal. The metal goes between the folding blade and the jaw. Hold the metal firmly against the gauge and pull the operating handle toward the body. As the handle is brought forward, the jaw automatically raises and holds the metal until the desired fold is made. When the handle is returned to its original position, the jaw and blade will return to their original positions and release the metal.

(2) Maintenance. Refer to the applicable maintenance manual for inspection, servicing, and maintenance procedures.

b. Cornice Brake. The cornice brake shown in figure 3-34 has a much greater range of usefulness than the bar folder. Any bend formed on a bar folder can be made on the cornice brake. The bar folder can form a bend or edge only as wide as the depth of the jaws. In comparison, the cornice brake allows the sheetthat is to be folded or formed to pass through the jaws from front to rear without obstruction.

(1) Operation. In making ordinary bends with the cornice brake, the sheet is placed on the bed with the sight line (mark indicating line of bend) directly under the edge of the clamping bar. The clamping bar is then brought down to hold the sheet firmly in place. The stop at the right side of the brake is set for the proper angle or amount of bend, and the bending leaf is raised until it strikes the stop. If other bends are to be made, the clamping bar is lifted and the sheet is moved to the correct position for bending.

(a) Capacity The bending capacity of a cornice brake is determined by the manufacturer. Standard capacities of this machine are from 12- to 22-gauge sheet metal, and bending lengths are from 3 to 12 feet. The bending capacity of the brake is determined by the bending edge thickness of the various bending leaf bars.

(b) Springback. Most metals have a tendency to return to their normal shape - a characteristic known as springback. If the cornice brake is set for a 90-degree bend, the metal bent will probably form an angle of about 87 degrees to 88 degrees. Therefore, if a bend of 90 degrees is desired, set the cornice brake to bend an angle of about 93 degrees to allow for springback.

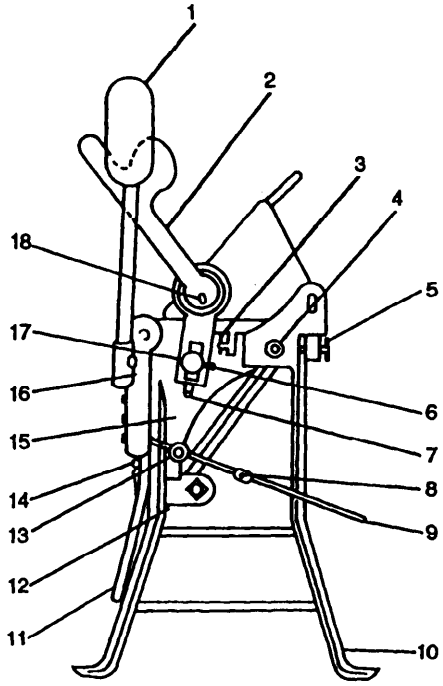

RIGHT HAND END VIEW

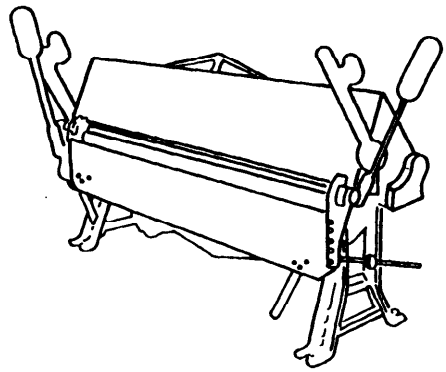

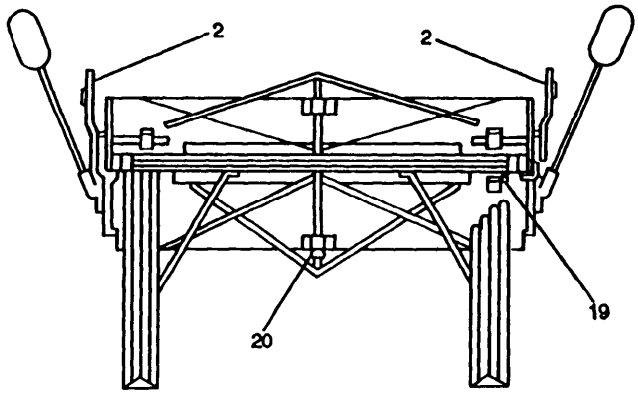

REAR VIEW

DETAIL A

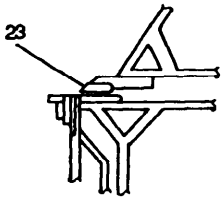

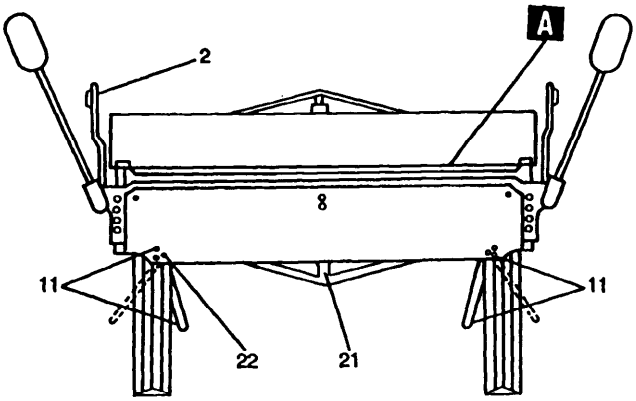

FRONT VIEW

LEGEND

1. BALANCE WEIGHT
2. CLAMPING HANDLE
3. SLOT CASTING ADJUSTMENT SCREW
4. SLOT CASTING LOCK SCREW
5. SLOT CASTING ADJUSTMENT SCREW
6. LINK SET SCREW
7. LINK ADJUSTMENT SCREW
8. ADJUSTMENT STOP
9. STOP GAUGE ROD
10. LEGS
11. BENDING LEAF HANDLE
12. BED END ADJUSTING SCREW
13. STOP GAUGE GUIDE
14. BENDING LEAF HINGE ADJUSTMENT SCREW
15. BED END HOUSING
16. BENDING LEAF HINGE
17. LINK SET SCREW
18. TOP SHAFT
19. BED ADJUSTMENT SCREW
20. BED ADJUSTMENT BOLT
21. BENDING LEAF ADJUSTMENT BOLT
22. BENDING LEAF TENSION BAR
23. TOP NOSE BAR

Figure 3-34. Cornice Brake

(2) Maintenance. Refer to the applicable maintenance manual for inspection, servicing, and maintenance procedures.

c. Slip Roll Former. The slip roll former shown in figure 3-35 is manually operated and consists of three rolls, two housings, a base, and a handle. The handle turns the two front rolls through a system of gears enclosed in the housing.

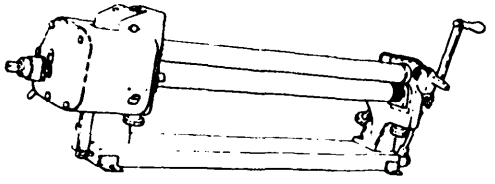

Figure 3-35. Slip Roll Farmer

(1) Operation. The front rolls serve as feeding or gripping rolls. The rear roll gives the proper curvature to the work. The front rolls are adjusted by two front adjusting screws on each end of the machine. The rear roll is adjusted by two screws at the rear of each housing. The front and rear rolls are grooved to permit forming of objects with wired edges. The upper roll is equipped with a release which permits easy removal of the metal after it has been formed.

(a) Adjustment. When using the slip roll former, the lower front roll must be raised or lowered so that the sheet of metal can be inserted. If the object has a folded edge, there must be enough clearance between the rolls to prevent flattening the fold. The rear roll must be adjusted to give the proper curvature to the part being formed. There are no gauges that indicate settings for a specific diameter; therefore, trial-and-error settings must be used to obtain the desired curvature.

(b) Inserting metal. The metal should be inserted between the rolls from the front of the machine. Start the metal between the rolls by rotating the operating handle in a clockwise direction.

(c) Starting edge. A starting edge is formed by holding the operating handle firmly with the right hand and raising the metal with the left hand. The bend of the starting edge is determined by the diameter of the part being formed. If the edge of the part is to be flat or nearly flat, a starting edge should not be formed.

(d) Forming. Be sure that fingers or loose clothing are clear of the rolls before the actual forming operation is started. Rotate the operating handle until the metal is partly through the rolls and change the left hand from the front edge of the sheet to the upper edge of the sheet. Then roll the remainder of the sheet through the machine.

(2) Maintenance. If a material requiring special handling, such as Alclad aluminum, is to be formed, ensure that the rollers are kept clean in order to prevent scratching. Specific information on servicing, inspection, and maintenance of the slip roll former can be found in the applicable technical manual.

d. Shrinking and Stretching Machine. The shrinking and stretching machine shown in figure 3-36 is used to form angles and channels and to smooth curves in materials used in aircraft structural repair.

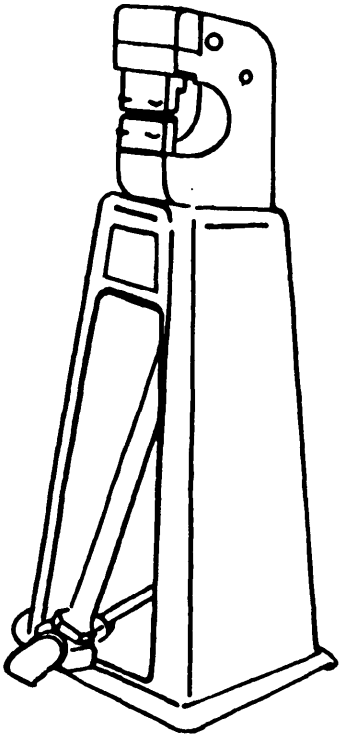

Figure 3-36. Shrinking and Stretching Machine

(1) Operation. This machine is equipped with two sets of jaw assemblies (one for shrinking and one for stretching). By replacing the jaw assemblies, the machine can be used to form either concave angles (shrinking) or convex angles (stretching). It has a ram that is actuated by the pendulum motion of the foot pedal and cam mechanism inside the frame. No adjustment need be made for thickness because the pendulum movement of the counterbalanced foot pedal compensates for all the different thicknesses of materials that are within the machine' s capacity.

(2) Maintenance. Refer to the applicable maintenance manual for inspection, servicing, and maintenance procedures for the shrinking and stretching machine.

CHAPTER 4

AIRCRAFT STRUCTURES

4-1. General. An aircraft is constructed of many parts that are either riveted, bolted, screwed, bonded, or welded together. Because these parts make up the structure of the aircraft, they are called structural members. The combined units are called the aircraft structure or airframe. This chapter will identify the components that make up the airframes of both fixed and rotary wing aircraft.

4-2. Fuselage. The basic type of fuselage construction now in use in Army helicopters and airplanes is the monocoque. This type of construction shown in figure 4-1 is like a shell in which the skin carnes the major stresses and functions as part of the airframe. In the full monocoque construction shown, the formers and bulkhead merely provide the shape, the skin carries the primary stress. This type of construction is rarely used because of its limited load-carrying capability. Therefore, two modifications of this construction were developed semi-monocoque and reinforced shell construction. The semi-monocoque type has formers, with the skin reinforced by stringers as shown in figure 4-2. Figure 4-3 shows the reinforced shell construction, where the skin is reinforced by a complete framework.

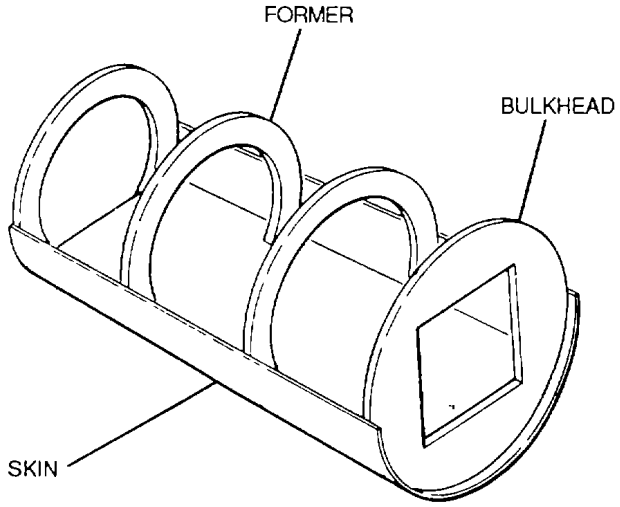

Figure 4-1. Monocoque Construction

a. Helicopters. The fuselage of a helicopter has two or more main sections, the cabin, tall cone, fuselage, and pylon, as shown in figures 4-4 and 4-5. The cabin section contains the passenger or cargo compartments, with space for the crew, passengers, cargo, fuel, oil

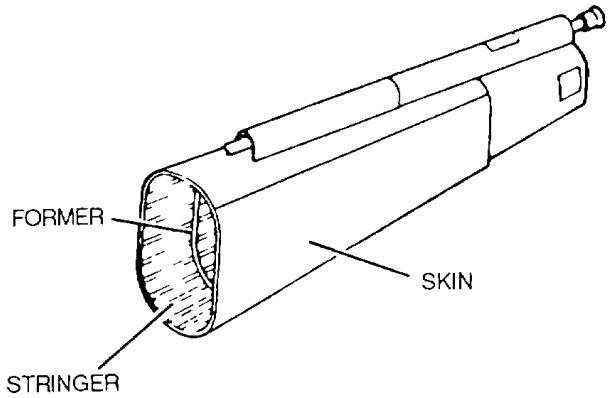

Figure 4-2. Semi-Monocoque Construction

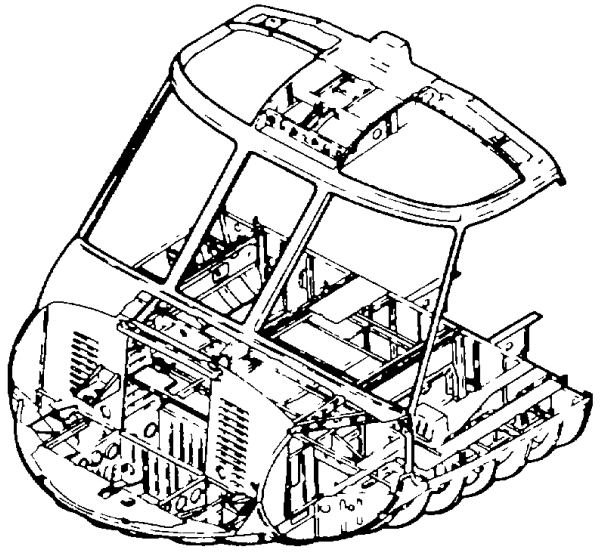

Figure 4-3. Reinforced Shell Construction

tanks, controls, and power plant. The exception is multi-engined helicopters, where the power plant is mounted internally or externally in separate engine nacelles. The tall cone is attached to the cabin in such a manner that it can be removed, inspected, repaired, or replaced as necessary. The tall cone supports the tall rotor, tall rotor drive shafts and the stabilizer. The aft fuselage supports the aft pylon.

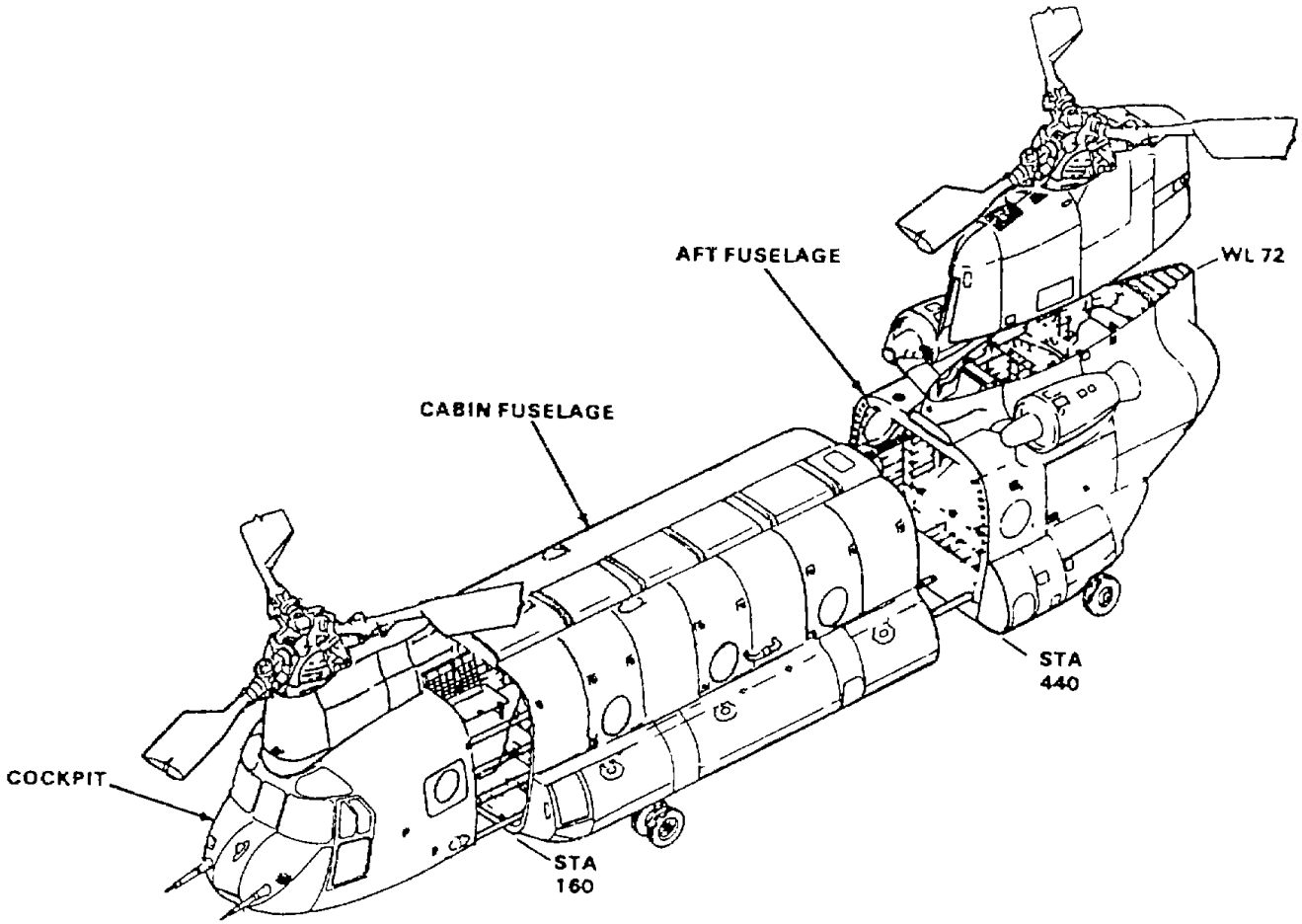

Figure 4-4. Airframe Sections

b. Airplanes. The fuselage is the main structural unit of any airplane. As figure 4-6 shows, the other structural units are directly or indirectly attached to it. On most multi-engine airplanes, the powerplants are housed in nacelles which are either built into the wings or suspended in pods from the wings or fuselage. The basic internal structure of an airplane fuselage is the same as for helicopters.

c. Construction Materials. The metal in general use for fuselage construction is aluminum alloy, principally one or the other of the two alloys commercially known as 2017-T and 2024-T. These are about three times lighter than steel and after being heat-treated have a strength approximately equal to that of mild steel. Skin sheet metal is usually Alclad aluminum (refer to paragraph 5-7c for a description of Alclad) Extrusions are generally of 2024-T, however, 2014-T is being used for extrusions with web thickness greater than 1/8 inch.

4-3. Engine Mounts. Engine mounts are designed to meet particular conditions of installations, such as location on aircraft, methods of attachment, and size, type, and characteristics of the engine they are intended to support Atypical engine mount is shown in figure 4-7. Although they vary widely in their appearance and in arrangement of their members, the basic features of their construction are similar.

a. Piston-Engine Mounts. A primary consideration in design of engine mounts is to render the engine and its equipment accessible for maintenance and inspection. A framework construction of welded chrome-molybdenum steel tubing is well adapted to this purpose and is used extensively. Forgings of chrome-nickel molybdenum are used for the more highly stressed fittings, these being accurately machined at points of rigid connection to the engine or other structures.

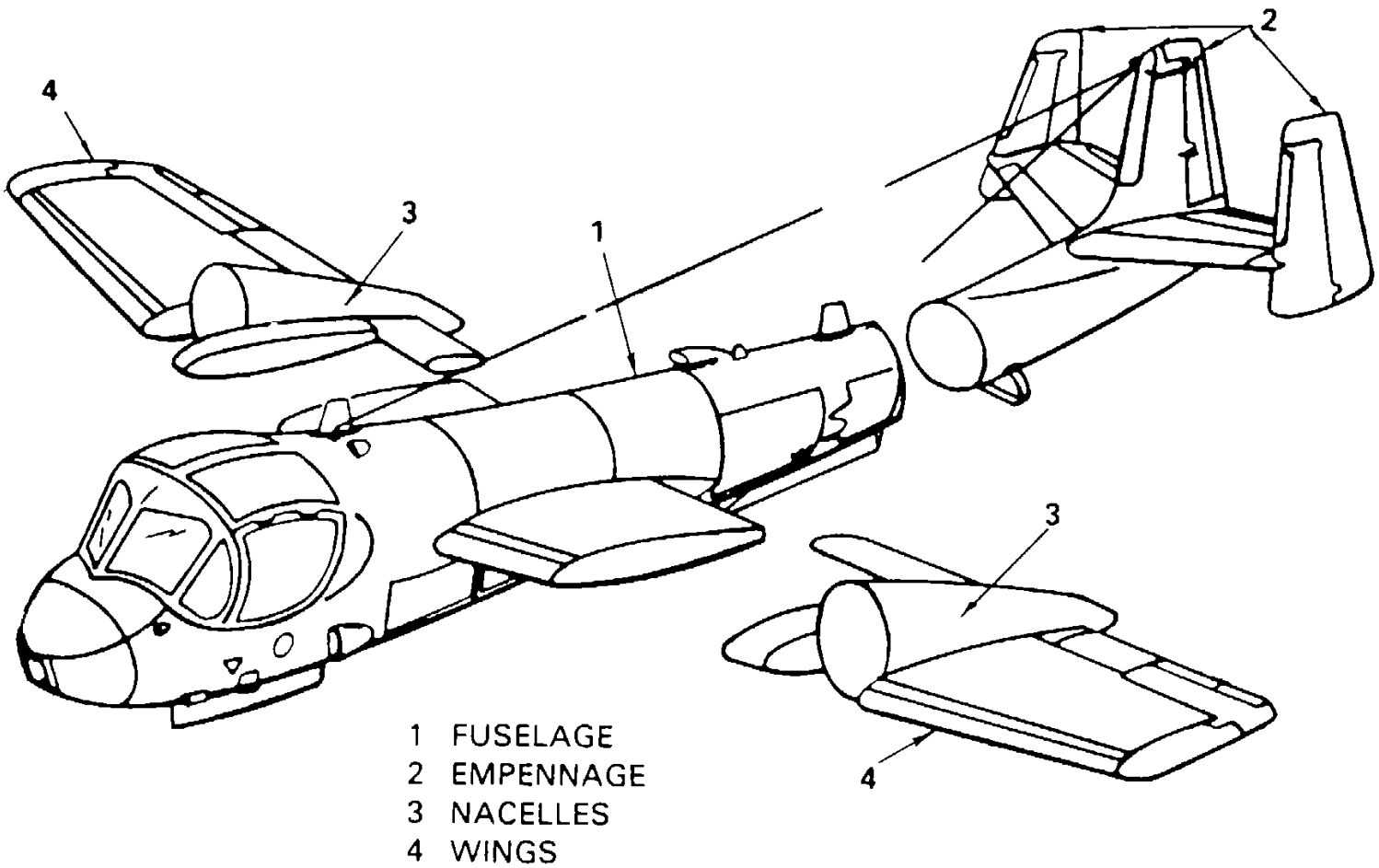

Figure 4-5. Airframe Sections

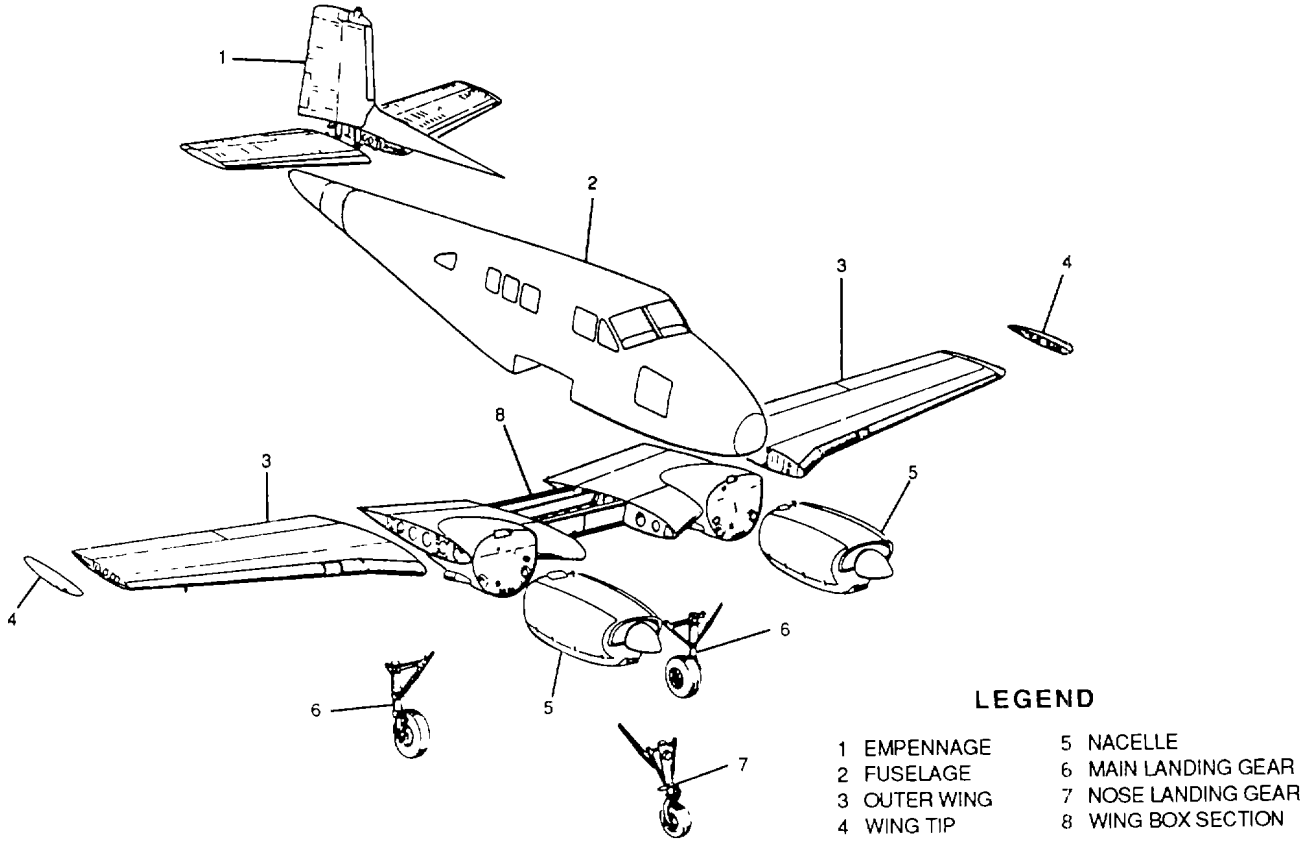

Figure 4-6. Airplane Structure Parts

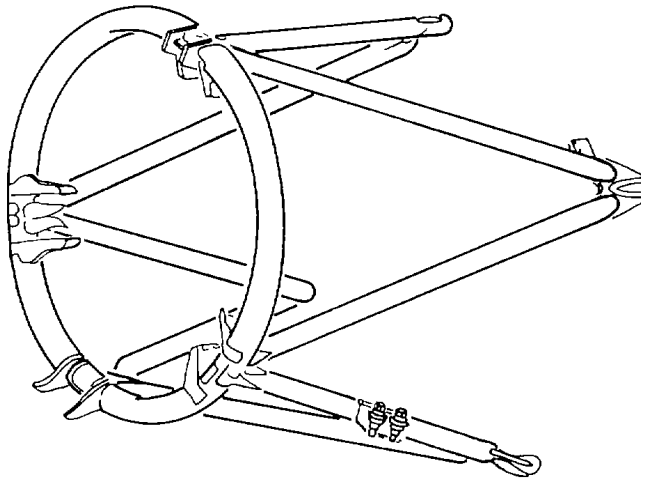

Figure 4-7. Engine Mount

b. *Turbine-Engine Mount*. Some important features of turbine-engine mounts are as follows:

- They operate in a high temperature environment.
- They are subjected to high vibration inertial loads.
- They are susceptible to fatigue failure from their loading environment.
- Corrosion properties must be of the highest quality to prevent stress corrosion failures.
- Improper torque of fittings and fasteners, coupled with flight load, can cause fastener failure This is critical to safety of flight.

c. *Maintenance*. Cracked, bent, or broken members of these structures constitute a highly dangerous condition and without exception must be replaced or repaired by activities authorized to do such work before

the aircraft is permitted to be flown in general, cracks are most likely to occur at the welded joints, and small cracks particularly may be difficult to see through the protective coating. This is especially so if the structure is not kept thoroughly clean, and special care must be exercised in making inspections at these points. Mounting clamps and bolts, if not properly tightened, will allow movement of the mount with consequent rapid wear of the bolts, elongation of bolt holes, and a resultant serious vibration Protective coatings, if damaged, should be retouched promptly to prevent corrosion of exposed steel surfaces. (Refer to TM 55-1500-345-23).

4-4. Nacelles. Nacelles are enclosed, streamlined structures that primarily house the engines on multiengined aircraft. They are used on helicopters and airplanes as required by the engine configuration. On airplanes, they may even house the landing gear and some cargo. As figure 4-8 shows, the structure is essentially the same as for a fuselage.

4-5. Wings. The wings of an airplane are airfoils designed to provide lift at operating speeds of the aircraft. Design and construction of the wings depend on the size, weight, intended use, operating speeds, and rate of climb of the airplane. Military aircraft today have wings of cantilever construction, meaning they have no external bracing.

a. Types of Design. In general, wing construction is based on one of three fundamental designs monospar, multispar, and box beam.

(1) Monospar. The monospar wing shown in figure 4-9 uses only one main longitudinal member in its construction. Ribs or bulkheads provide the necessary contour or shape to the airfoil. Wings of the strict monospar type of construction are not in common use. However, this type of wing design is often used when modified by adding false spars or light shear webs along the trailing edge as support for the control surfaces.

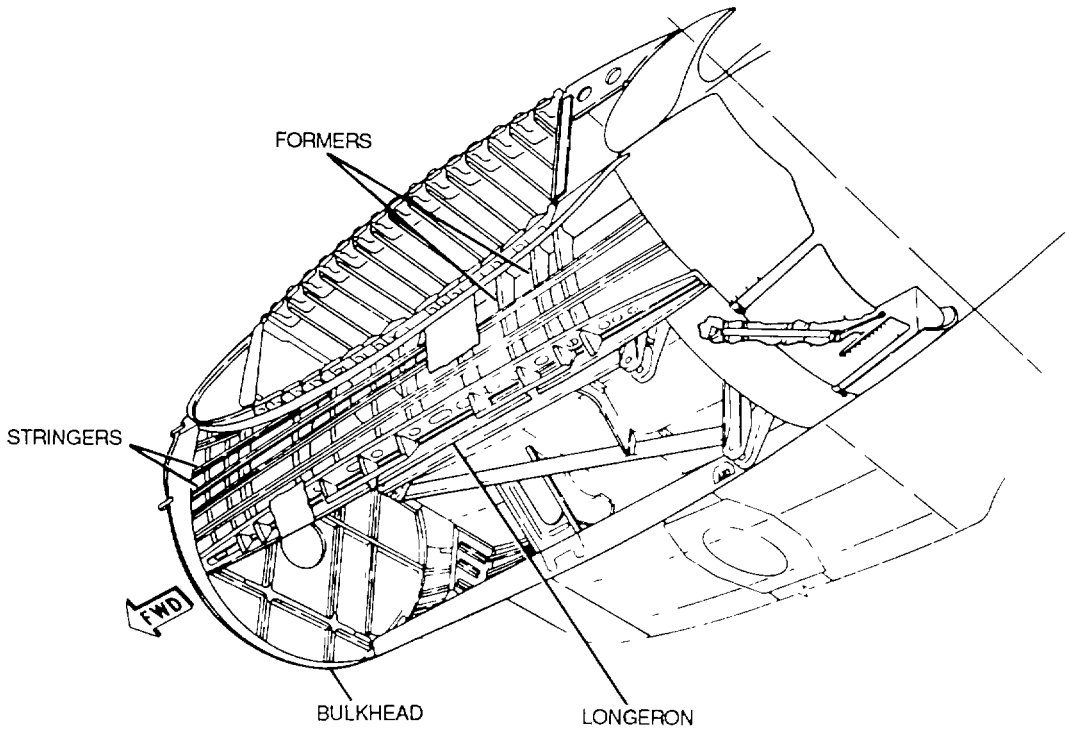

Figure 4-8. Nacelle Structure

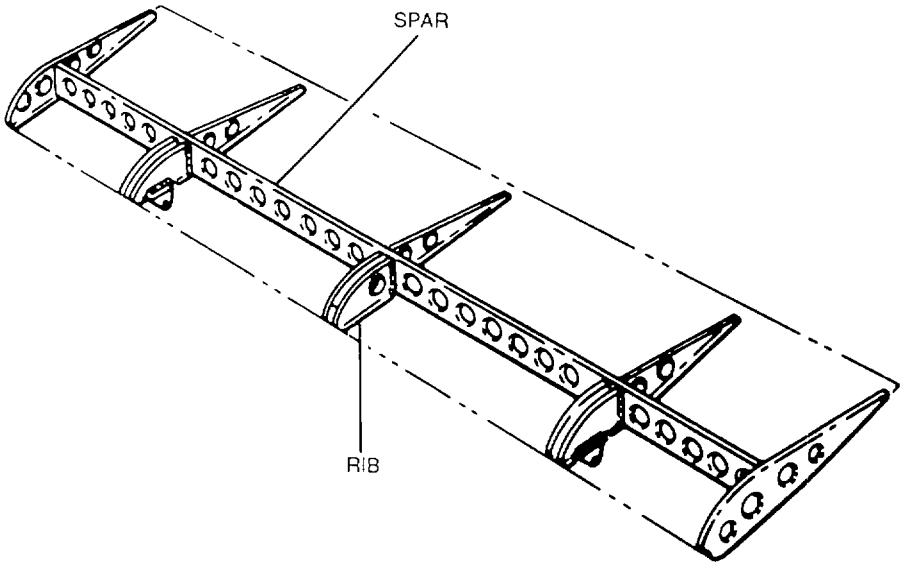

Figure 4-9. Monospar Wing Construction

(2) Multispar. The multispar wing shown in figure 4-10 uses more than one main longitudinal member in its construction. Ribs or bulkheads are included to give contour to the wing. This type of construction is used in lighter aircraft.

(3) Box beam. The box beam construction shown in figure 4-11 uses two main longitudinal members with connecting bulkheads to provide additional strength and give contour to the wing. A corrugated sheet may be placed between the bulkheads and the smooth outer skin to enable the wing to carry tension and compression loads better. In some cases, heavy longitudinal stiffeners are substituted for the corrugated sheets or a combination of corrugated sheets on the upper surface of the wing and stiffeners on the lower surface is used.

b. Internal Construction. The main structural components of a wing are the spars, the ribs, and the stringers. These parts are shown in figure 4-12.

(1) Spars. Spars are the principal structural members of the wing. They run parallel to the lateral axis or toward the wing tip, and are usually attached to the fuselage by wing fittings, plain beams, or by part of a truss system. The I-beam type of spar construction. consists of a web and capstrips, as shown in figure 4-13. The web is the portion of the I-beam that is between the capstrips. Capstrips are extrusions, formed angles, or milled sections to which the web is attached. They carry the loads caused by the wing bending and also provide a foundation for attaching the skin.

(2) Ribs These are the crosspieces that make up the framework of a wing. They run from the leading edge of the wing towards its trailing edge (front to rear). The ribs give the wing its contour or shape and transfer the load from the skin to the spars. Ribs are also used in ailerons, elevators, fins, and stabilizers. There are three general types of rib construction: reinforced, truss, and formed, as shown in figure 4-14. The reinforced and truss ribs are both relatively heavy compared to the formed rib and are located only at points where the greatest stresses are imposed. The construction of reinforced ribs is similar to that of spars and consists of upper and lower capstrips joined together by a web plate. The web is reinforced between the capstrips by vertical and diagonal angles. Reinforced ribs are much more widely used than truss ribs. The latter consist of capstrips reinforced only by vertical and diagonal cross members. Formed ribs are made of formed sheet metal and are very light in weight. The bent-up portion of a formed rib is known as the flange; the vertical portion is called the web. The web is

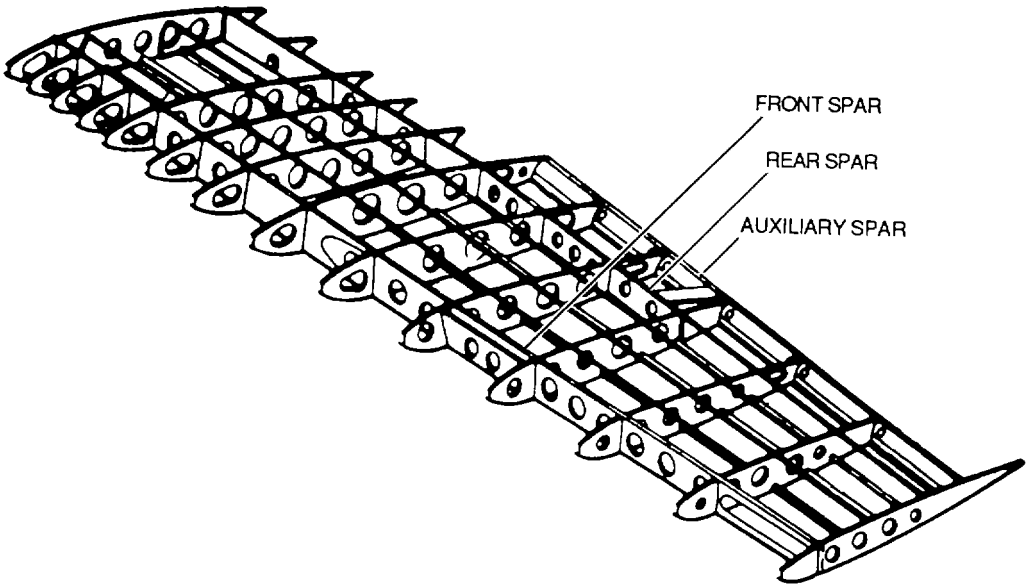

Figure 4-10. Multispar Wing Construction

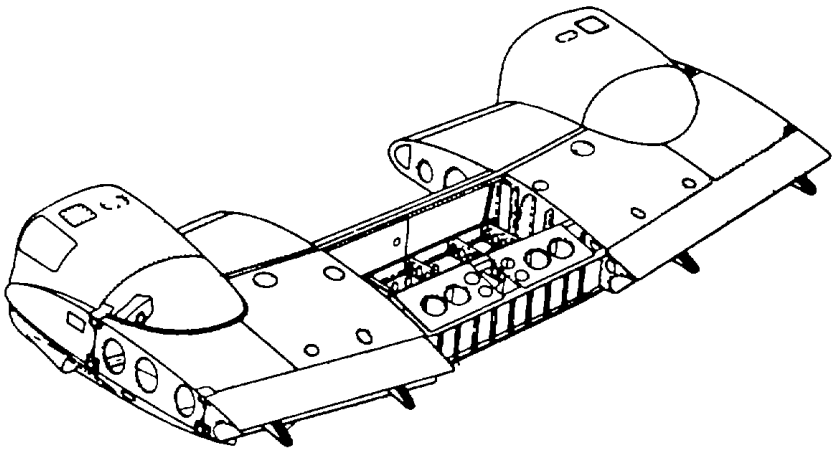

Figure 4-11. Box Beam Wing Construction

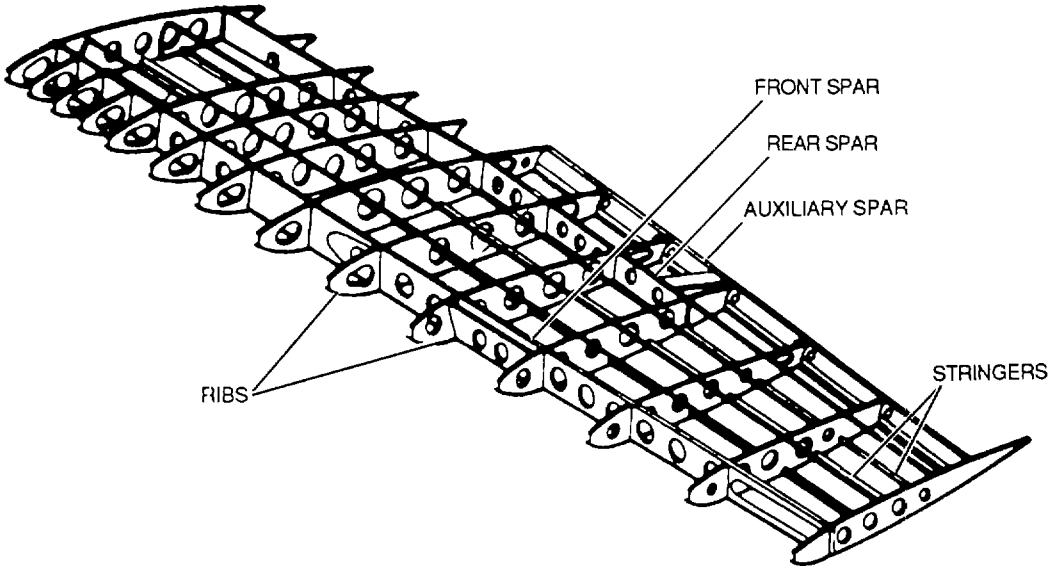

Figure 4-12. Wing Internal Construction

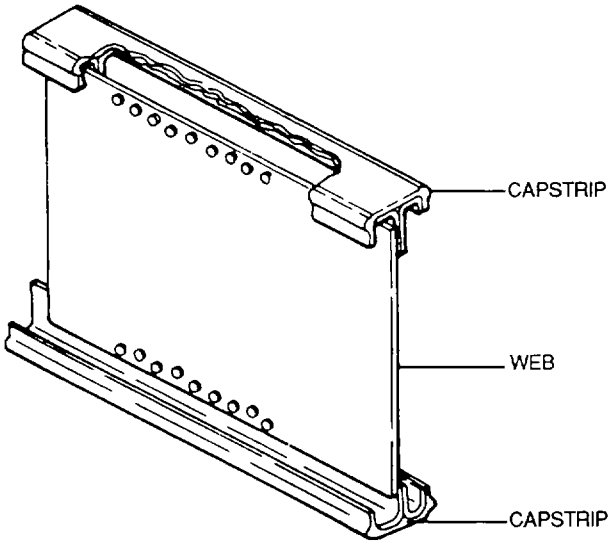

Figure 4-13. Spar Construction

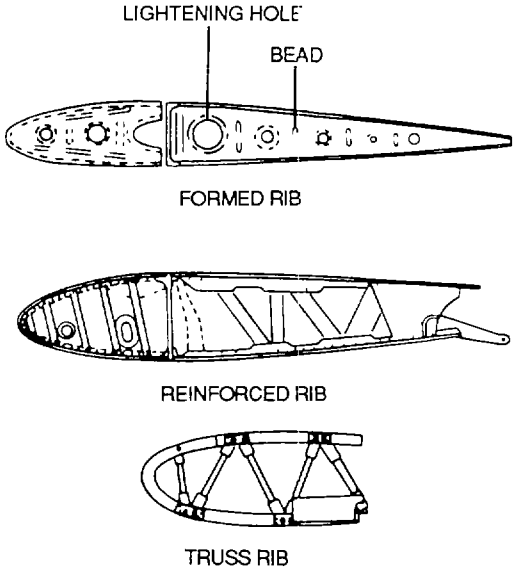

Figure 4-14. Rib Construction

generally constructed with lightening hoses as shown in figure 4-14, with beads formed between the holes. The lightening holes lessen the weight of the rib without decreasing its strength. The lightening hole areas are made rigid by flanging the edges of the holes. The beads stiffen the web portion of the rib.

(3) Stringers. See paragraph 4-8b for information on stringers

4-6. Empennage. The tall section of an aircraft is called the empennage it includes the aft end of the fuselage or booms, the rudders, stabilizers, elevators, and trim tabs. Generally speaking, the empennage structures are the same as for wings. The empennage is usually of all-metal construction and cantilever design. Monospar and multispar construction are both commonly used. Ribs give shape to the cross section. Figure 4-15 shows a typical empennage assembly and its components. Figure 4-16 shows a typical helicopter stabilizer installation.

4-7. Flight Control Surfaces. Flight control surfaces are hinged or movable airfoils designed to change the attitude of the aircraft during flight. They consist of ailerons, elevators, rudders, trim tabs, and flaps. Figure 4-17 shows these surfaces installed on the aircraft. These surfaces are similar in structure to wings.

4-8. Structural Members. Specific structural members consist of bulkheads, frames, formers, stringers, and longerons.

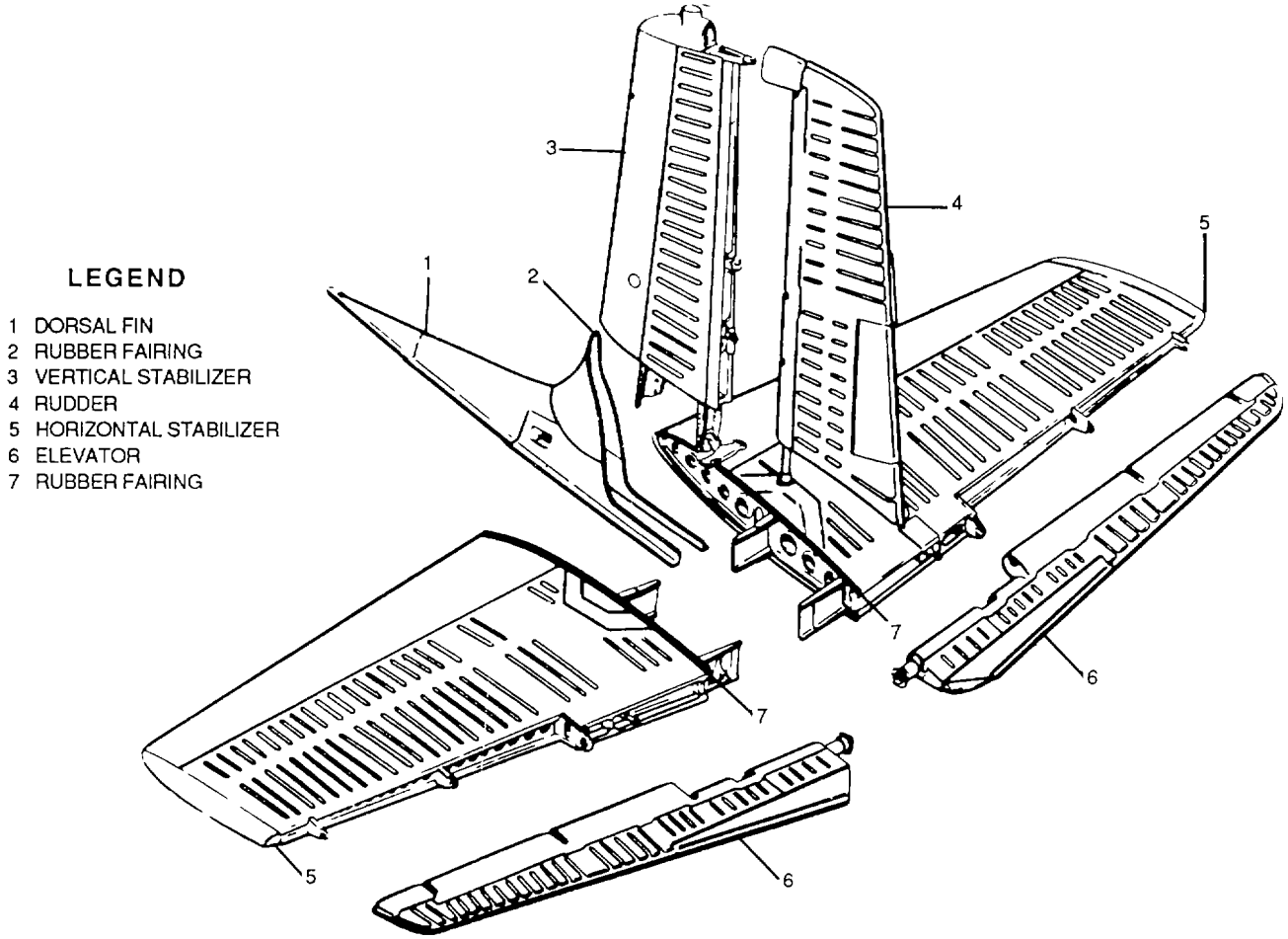

Figure 4-15. Empennage Assembly

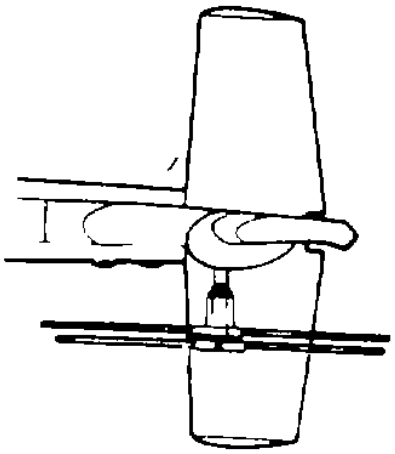

Figure 4-16. Helicopter Stabilizer

a. Bulkheads, Frames, and Formers. Bulkheads, frames, and formers serve a dual purpose. They give cross-sectional shape to the fuselage, and they add rigidity and strength to the structure. The shape and size of these structures vary depending on their function and location.

(1) Formers. Formers are the lightest of these units. They are used primarily for support between larger members and for skin attachment. An example is shown in figure 4-18

(2) Frames. Frame assemblies are the most numerous and important members in the fuselage. They provide the major cross-sectional structure as shown in figure 4-18, and outline structural features such as doors and windows.

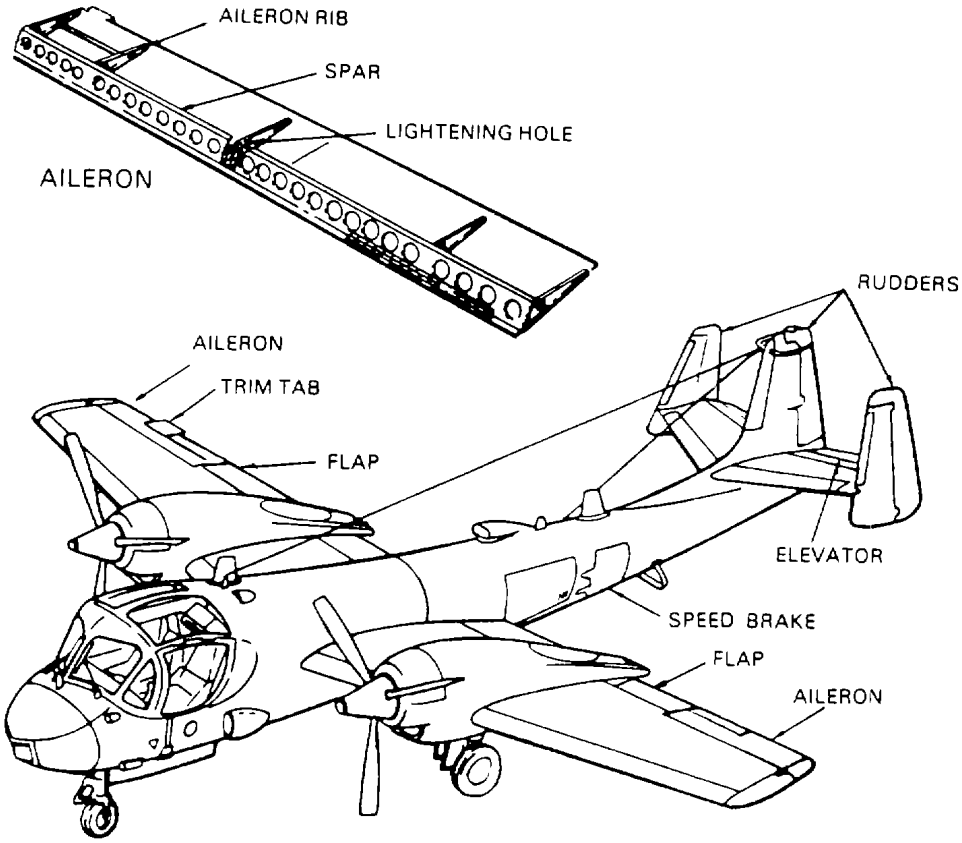

Figure 4-17. Flight Control Surfaces

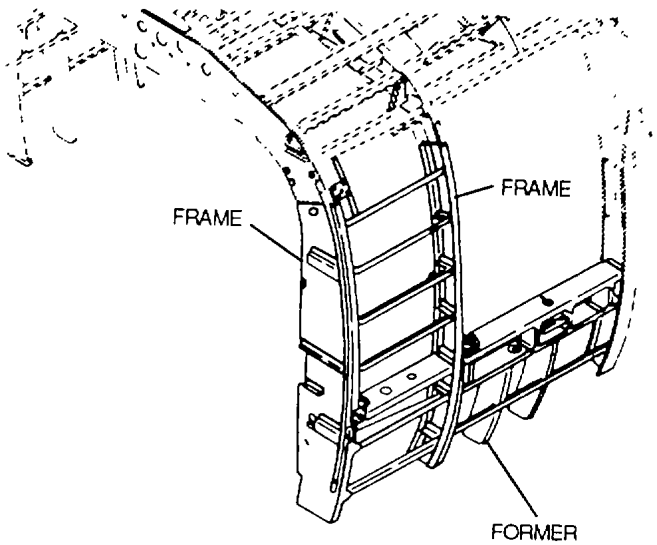

Figure 4-18. Former and Frame Installation

(3) Bulkheads. When frame assemblies are used to separate one section from another, they are called bulkheads. Their construction is heavier than that of formers, and they are sometimes equipped with doors or other means of access. Figure 4-19 shows typical bulkhead installations.

b. Stringers and Longerons. Stringers and longerons are the main lengthwise members of the structure. Figure 4-20 shows these members installed.

(1) Stringers. Stringers are smaller, lighter, and weaker than longerons. They have some rigidity, but are mainly used to shape the structure and attach the skin Stringers usually have a cross-section in the shape of a J or a Z, as shown in figure 4-21, but other shapes may be used.

(2) Longerons. Longerons are fairly heavy Several longerons usually run the full length of the structure. They hold the bulkheads and formers which, in turn, hold the stringers Longerons usually take the form of a T extrusion or a formed hat section, as shown in figure 4-22.

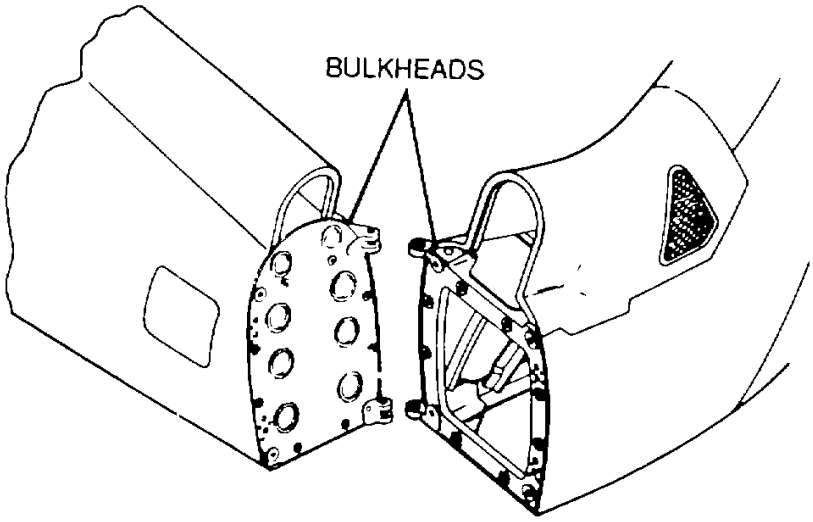

Figure 4-19. Bulkhead Installation

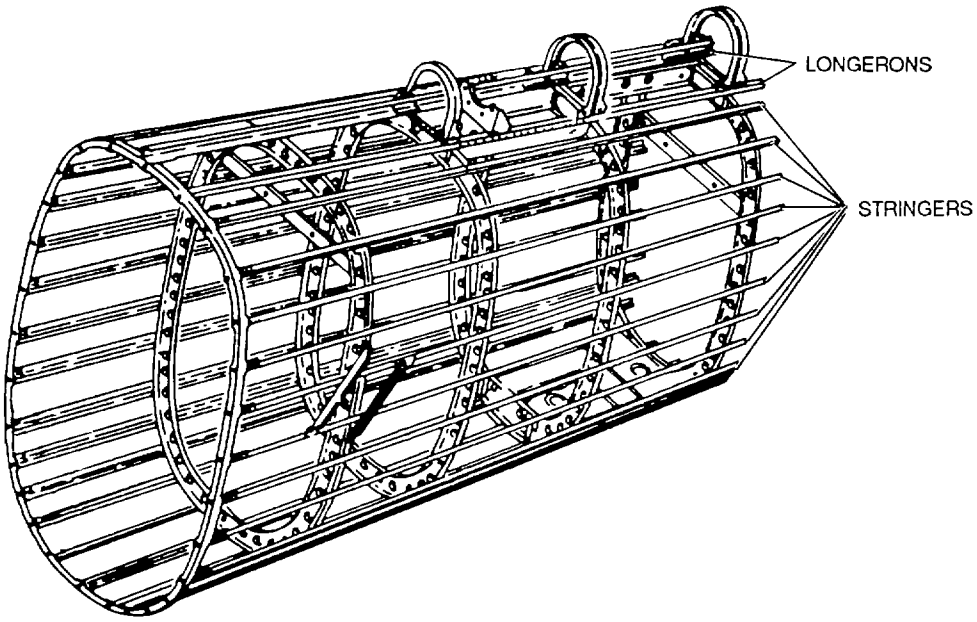

Figure 4-20. Longeron and Stringer Installation

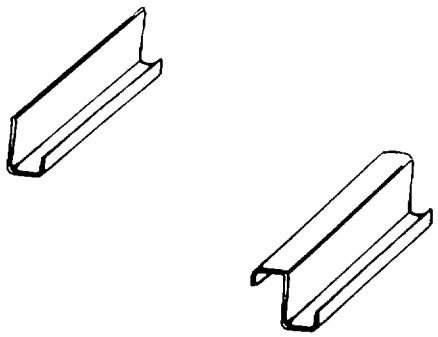

Figure 4-21. Typical Stringer Cross-Sections

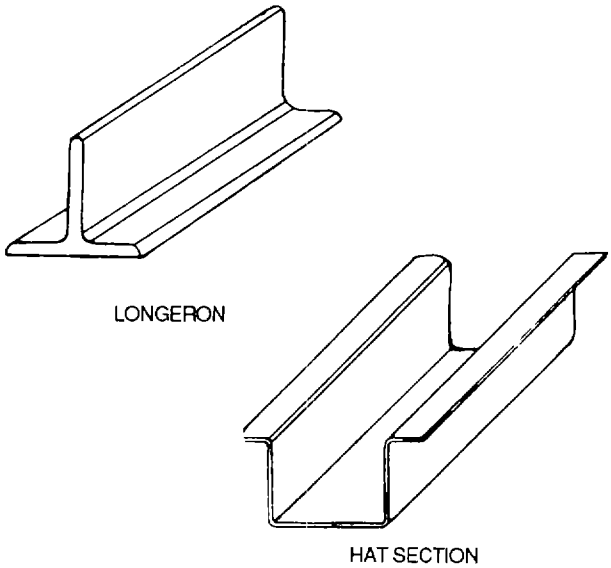

Figure 4-22. Longeron and Hat Sections

CHAPTER 5

STRUCTURAL METALS

5-1. General. Metals are divided into two classes, ferrous and nonferrous. Ferrous metals are those in the iron class and magnetic in nature. These metals are of iron, steel, and the alloys related to them. Nonferrous metals are metals that contain little or no ferrous metals and include aluminum, copper, magnesium, and titanium. This chapter describes the characteristics of these metals and their alloys, with particular reference to their use in aircraft structures.

5-2. Properties of Metals. Following are the proper ties of metals that are relevant to their use in aircraft structures.

a. Tensile Strength . Tensile strength is the ability of the metal to resist being pulled apart. It is expressed as the number of pounds of force required to pull apart a bar of the metal one inch wide and one inch thick.

b. Shear Strength. Shear strength is the ability of a metal to resist being fractured by opposing forces in a straight line, but not in the same plane.

c. Compressive Strength. Compressive strength is the ability of a metal to withstand pressures acting on the same plane.

d. Elasticity. Elasticity is the ability of a metal to return to its original size, shape, and dimensions after being formed.

e. Linear Expansion. Linear expansion is the increase in the length of a body with a rise in temperature.

f. Ductility. Ductility is the ability of a metal to be drawn or stretched permanently without rupture or fracture. Lack of ductility is brittleness.

g. Malleability. Malleability is the ability of a metal to be deformed or compressed permanently without rupture or fracture.

h. Toughness. Toughness is the ability of a metal to resist the start of permanent distortion, and the ability to resist shock or absorb energy.

i. Hardness. Hardness is the ability of a metal to resist penetration and wear by another material.

j. Machinability. Machinability is the ease or difficulty with which a metal can be machined.

k. Corrosion Resistance. Corrosion resistance is the resistance to eating away or wearing by the atmosphere, moisture, or other agents.

l. Abrasion Resistance. Abrasion resistance is the resistance to wearing by friction.

m. Conductivity. Conductivity is the ability of a metal to conduct or transfer heat or electricity.

n. Specific Gravity. Specific gravity is the ratio of weights between two objects of equal volume, one of which is always water.

5-3. Stress and Strain Forces. When an aircraft is designed, every portion of it is considered in relation to the physical characteristics of the metal of which it is made. Every part of the aircraft is planned to carry the load to be imposed on it. Although the aircraft repairer is not involved in this planning and design, it is important that the repairer understand the stresses involved in order to avoid changes in the original design through improper repairs. The five major stresses to which an aircraft is subjected are tension, compression, torsion, shear, and bending.

a. Tension. Tension, shown in figure 5-1, is the stress that resists a force that tends to pull apart The engine pulls the aircraft forward, but air resistance tries to hold it back. The result is tension, which tries to stretch the aircraft. The tensile strength of a material is measured in psi (pounds per square inch) and is calculated by dividing the load (in pounds) required to pull the material apart by its cross-sectional area (in square inches).

b. Compression. Compression, shown in figure 5-2, is the stress that resists a crushing force. The compressive strength of a material is also measured in

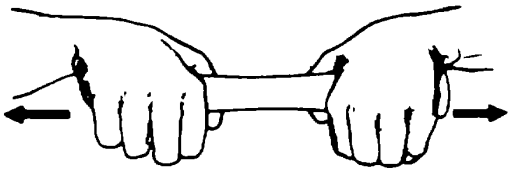

Figure 5-1. Tension

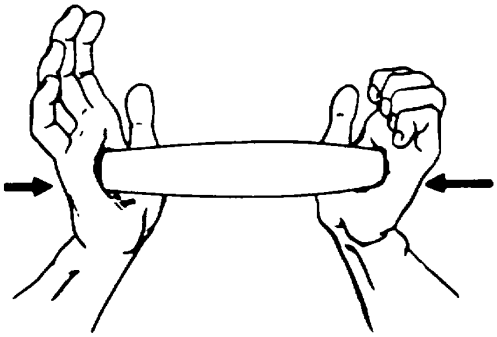

Figure 5-2. Compression

psi. Compression is the stress that tends to shorten or squeeze aircraft parts.

c. Torsion. Torsion, shown in figure 5-3, is the stress that produces twisting. While moving the aircraft forward, the engine also tends to twist it to one side, but other aircraft components hold it on course. Thus, torsion is created The torsional strength of a material is its resistance to twisting or torque

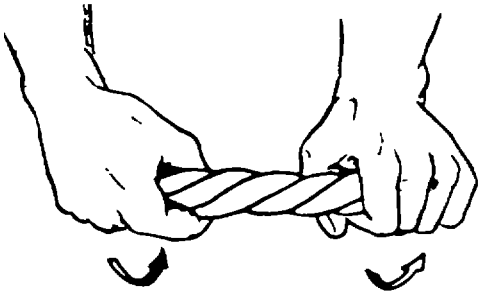

Figure 5-3. Torsion

d. Shear. Shear, shown in figure 5-4, is the stress that resists the force tending to cause one layer of a material to slide over an adjacent layer. Two riveted plates in tension subject the rivets to a shearing force Usually, the shear strength of a material is either equal to or less than its tensile or compressive strength.

Figure 5-4. Shear

Aircraft parts, especially screws, bolts, and rivets, are often subject to a shearing force.

e. Bending. Bending stress is a combination of compression and tension. The rod in figure 5-5 has been shortened (compressed) on the inside of the bend and stretched on the outside of the bend.

5-4. Metals and Alloys. Iron, aluminum, copper, magnesium, and titanium have proven to be very useful metals. Alloys, however, increase their usefulness by altering their physical characteristics, and producing much more versatile and practical materials for aircraft structures

a. Alloying. An alloy is a metallic mixture composed of two or more elements of which at least one is a metal However, a metal is not designated an "alloy" based on elements used in its manufacture. For example iron, carbon, manganese, silicon, phosphorous, sulfur, oxygen, nitrogen, and hydrogen are used in the manufacture of plain carbon steel. It does not become an "alloy steel" until the elements are increased beyond regular composition or until other elements are added in significant amounts for a specific purpose.

b. Industrial Alloys. Steel, aluminum, and titanium are the primary metals which are alloyed for use in aircraft structures.

(1) Steel alloys. Carbon is used in varying amounts up to 1.05 percent to produce carbon steels which range from mild to very hard Silicon, manganese, nickel, vanadium, tungsten, molybdenum, and chromium are most commonly used to produce alloy steels. Each element imparts special properties to the alloy in which it is used, and they are used alone or in certain combinations for alloys which have specific qualities

(2) Aluminum alloys. Aluminum alloys are made when aluminum is combined with copper, manganese, and magnesium. These alloys are lightweight

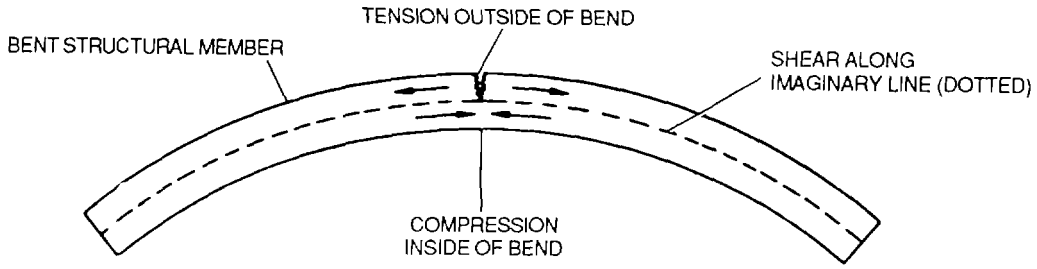

Figure 5-5. Bending

and strong, but require treatment to have the same corrosion resistance as pure aluminum.

(3) Titanium alloy. Titanium alloy can contain small amounts of aluminum and vanadium. It is light, strong, and corrosion resistant.

c. Preparing Alloys. The most common way of preparing alloys is by melting together the constituent metals. If the melting point of the metals differs widely or if one metal is relatively very reactive, it may be convenient to first prepare a master alloy, portions of which are then melted with the remaining metals. Depending on the nature of the alloy, the melting process may be carred out in gas-, coke-, or oilfired furnaces. Electrical heating by resistance, induction, or arc-melting methods is also used. A few alloys are prepared directly by the process whereby the metals are extracted from their ores. Thus, pig iron is prepared by the reduction of iron ore in the blast furnace and steels are prepared by further purifying the pig iron. Alloys may also be prepared by mixing finely divided powders of the constituent metals and compacting the mixture under high pressure, followed by removing the impurities.

5-5. Heat Treatment. Heat treatment is an operation which involves the heating and cooling of the metal in its solid state in order to obtain certain desirable characteristics or properties.

a. Types. The general types of heat treatment are annealing, hardening, tempering, and surface hardening.

(1) Annealing. Annealing is a process involving the heating of a metal above the critical temperature and subsequent slow cooling. The purpose of such heating may be to remove stresses, to induce softness, to alter ductility, toughness, electrical, magnetic, or other physical properties; to refine crystalline structure, to remove gases, or to produce a definite microstructure. Some specific treatments which fall into this category are normalizing, tempering, and malleablizing.

(2) Hardening. Alloys are hardened by heating them above their critical temperature and cooling them rapidly by plunging them into cold water, iced brine, or other liquid. When the metal is at its critical temperature, certain alloying elements are in fine solution within its structure. As it is rapidly cooled, or quenched, the elements are fixed in that fine solution, and the metal is hardened if the alloy is allowed to cool slowly, the alloying element "spreads out," which results in a softer final product.

(3) Tempering. After a metal is hardened, it may be too brittle for ordinary purposes, therefore, some of the hardness should be removed and toughness induced. Tempering is the process of reheating hardened metal to a point below its critical temperature and cooling it at any rate required. The metal is heated according to the toughness desired. As the tempering temperature increases, toughness increases, and hardness decreases.

(4) Surface hardening. The surface of some alloyed structures, usually steel, can be hardened by means of case hardening. This process produces a hard, wear-resistant surface, and a soft, tough core. It is accomplished in steel by increasing the carbon content of the surface The methods for surface hardening are called pack carburizing, gas carburizing, and nitriding. See TM 9-237 for a description of each process.

b. Hot Working. Metals are sometimes hot-worked from the ingot into some form from which it is either hot- or cold-worked to the finished shape. There are three basic techniques used in hot working casting, forging, and extruding.

(1) Casting. Castings are produced by pouring a molten metal or alloy into a mold, where it is allowed to solidify. There are two types of molds single-purpose and permanent. A single-purpose mold is specially prepared for each casting. This mold is often made of sand. Where large numbers of a casting are desired, it is advantageous to use a permanent mold.

(2) Forging. Forging is the mechanical working above the critical temperature to shape the metal as required it is done by either pressing or hammering the metal into shape.

(3) Extruding. The extrusion process involves forcing metal through an opening in a die, causing the metal to take the shape of the die opening. Some metals, such as lead, tin, and aluminum, may be extruded cold, but metals are generally heated prior to this process. Many structural parts, such as stringers, are formed by extrusion.

c. Cold-Working. Cold-working is the forming of metal at temperatures below the critical range. It results in strain-hardening of the metal, therefore, the metal must be occasionally softened by annealing. The three primary processes of cold working are cold-rolling, cold drawing, and stamping or pressing.

(1) Cold-rolling. Cold rolling is performed with the metal at room temperature, by passing the metal through chilled finishing rolls. This produces a smooth finish and also shapes the pieces to accurate dimensions. The principal forms of cold-rolled metal are sheets, bars, and rods.

(2) Cold-drawing. This process is used in making seamless tubing, wire, streamlined tie rods, and other forms of stock. Material is drawn through dies which form the metal into the desired shape.

(3) Stamping or pressing. Forming sheet metal parts by forcing the flat metal into molds or dies is called stamping or pressing. The machines used for this process are hydraulic, mechanical, and manually operated. Due to the expense of making dies with harder metals, hardwood is often used. However, some machinery tends to deform wood dies, so some machines use lead male dies and zinc female dies.

5-6. Steel. Iron obtained directly from the smelting process contains an excess of carbon and impurities which render it undesirable for commercial use. After refining, only small amounts of carbon and impurities remain in the iron. This presence of limited quantities of carbon greatly affects the useful properties of iron. If carbon is added in percentages ranging up to approximately 1 percent, the product will be vastly superior to iron in toughness, strength, and hardness and is classified as carbon steel. Numerous types of carbon steels, ranging from mild to very hard, can be produced by heat treating these metals.

a. Identification of Steels. Steel stock can be identified by the Society of Automotive Engineers (SAE) numbering system, and painting.

(1) SAE numbering system. A numeral index system is used to identify the compositions of the SAE steels, which makes it possible to use numerals that are partially descriptive of the composition of material covered by such numbers. Table 5-1 shows these numbers. The first digit indicates the type to which the steel belongs; for example "1 " indicates a carbon steel, "2" a nickel steel, and "3" a nickel chromium steel in the case of the simple alloy steels, the second digit generally indicates the approximate percentage of the predominant alloying element. Usually the last two or three digits indicate the approximate average carbon content in "points" or hundredths of 1 percent. Thus "2340" indicates a nickel steel of approximately 3 percent nickel (3.25 to 3.75) and 0.40 percent carbon (0.38 to 0.43). In some instances, in order to avoid confusion, it has been found necessary to depart from this system of identifying the approximate alloy composition of a steel by varying the second and third digits of the number. An instance of such departure is the steel numbers selected for several of the corrosion and heat resisting alloys.

(2) Painting. Every effort should be made to identify the type of steel, when it has not been marked by the mill, with identification indicated by color marking The markings will be painted in stripes on each tube, bar, rod, sheet, or plate using enamel, Federal Specification TT-E-489, and the following procedure:

WARNING

Dry-cleaning solvent is flammable and solvent vapors are toxic. Use P-D-680, Type II Solvent in a well-ventilated area. Keep away from open flames. Avoid prolonged solvent contact with skin.

(a) Clean all grease, dirt, and foreign matter from surface to be painted using dry-cleaning solvent, Federal Specification P-D-680

Table 5-1. Steel SAE Numbers

Type of steel	Numerals (and digits)
Carbon steels	1xxx
Plain carbon	10xx
Free cutting (screw stock)	11xx
Manganese steels	13xx
Nickel chromium steels	3xxx
1.25 percent nickel, 0.65 percent chromium	31xx
Corrosion and heat resisting	303xx
Molybdenum steels	4xxx
0.25 percent molybdenum	40xx
Nickel-Chromium-Molybdenum steels	
1.80 percent nickel, 0.50 and 0.80 percent chromium; 0.25 percent molybdenum	43xx
0.55 percent nickel, 0.50 and 0.65 percent chromium; 0.20 percent molybdenum	86xx
0.55 percent nickel, 0.50 percent chromium, 0.25 percent molybdenum	87xx
3.25 percent nickel; 1.20 percent chromium; 0.12 percent molybdenum	93xx
Nickel-Molybdenum steels	
1.75 percent nickel, 0.25 percent molybdenum	46xx
3.50 percent nickel; 0.25 percent molybdenum	48xx
Chromium steels	5xxx
Low chromium	50xx
Medium chromium	51 xxx
High chromium	52xxx
Corrosion and heat resisting	514xx and 515xx
Chromium-Vanadium steel	6xxx
0.80-1.00 percent chromium, 0.10-0.15 vanadium	61xx
Silicon manganese steels	9xxx
2.0 percent silicon	92xx
Low alloy, high tensile	950
Boron Intensified	xxBxx
Leaded steels	xxLxx

NOTE

- **It will not be necessary to color code material having legible, continuous identification markings applied in accordance with Federal Standard FED-STD-183 or FED-STD-184. However, material that was not marked numerically by the manufacturer because of its size, will be color coded by the supply and maintenance organizations receiving the material. Material that is cut up in such a manner that identification markings are illegible or missing will be color coded by the holding activity. Material that was color coded using an obsolete color code shall be recoded as outlined in below.**
- **Color marking does not apply to corrosion-resistant steels, low carbon alloy steel, or tool steels**
- **There are ten colors used in this identification marking system to represent numbers 1 through 9, and 0 (table 5-2). These ten colors are also used to represent the letters F, H, O, T, W, A, B, C, D, and S. A combination of these colors, representing a combination of numbers and letters, is used to mark the material to denote its material designation. For example, aluminum alloy with material designation 2025-T6 is marked green, black, green, orange, space, yellow, and red (figure 5-6). The commercial designation, AISI (American Iron and Steel Institute), and SAE (Society of Automotive Engineers) numbers are utilized as material designation numbers.**

(b) Using paint of appropriate color, mark each item of material with parallel stripes of equal width, 1/2 to 3/4 inch wide, placed side by side and in sequence so that when read from nearest end of bar toward middle, the material designation is shown (see figure 5-6).

(c) When two or more like colors appear adjacent to each other, leave a space between stripes of not more than 1/4 inch.

(d) Leave a space of 3/4 to 1 inch between stripes representing first two digits and last two digits of steel designation.

(e) To facilitate identification of materials coded with the old color code, a cross reference between the old and new codes is provided in table 5-3.

NOTE

- **Table 5-3 is useful only for identifying material in stock Do not attempt to remark material using table 5-3 information.**
- **To facilitate identification of materials marked with a specification number, a list of Federal and Military Specifications, cross referenced with commercial designations, AISI, and SAE numbers is provided in table 5-4.**

b. Alloying Elements. Carbon steel forms the base of the alloy steels which are produced by combining carbon steel with sufficient quantities of certain other elements known to improve the properties of steel Silicon, manganese, nickel, vanadium, tungsten, molybdenum, and chromium are the common elements used and are known as alloying elements. Each element imparts special properties to the alloy in which it is used. These elements alter the rate and temperature at which internal structural changes take place during the heat treatment, resulting in a finer quality of alloy. Except in rare instances, the superiority of steel alloys over carbon steels is demonstrated only after proper heat treatment.

c. Types of Steels and their Uses. Following are the different types of alloy steels.

(1) Carbon steels Steel alloys with varying amounts of carbon are classed as low-, medium-, and high carbon steels.

(a) Low-carbon steel. Steel containing carbon in percentages ranging from 0.10 to 0.30 percent is classed as low carbon steel. The equivalent SAE numbers range from 1010 to 1030. Steels of this grade are used for the manufacture of articles such as safety wire, certain nuts, cable bushing, etc. This steel in sheet form is used for secondary structural parts and clamps and in tubular form for moderately stressed structural parts.

Table 5-2. Identification Marking Code

Color identification number (federal standard number 595)	Color	Number	Letter
15102	Blue	1	F
14187	Green	2	H
14087	Olive drab	3	O
13538	Yellow	4	T
12197	Orange	5	W
11136	Red	6	A
10049	Maroon	7	B
17875	White	8	C
16473	Gray	9	D
17038	Black	0	S

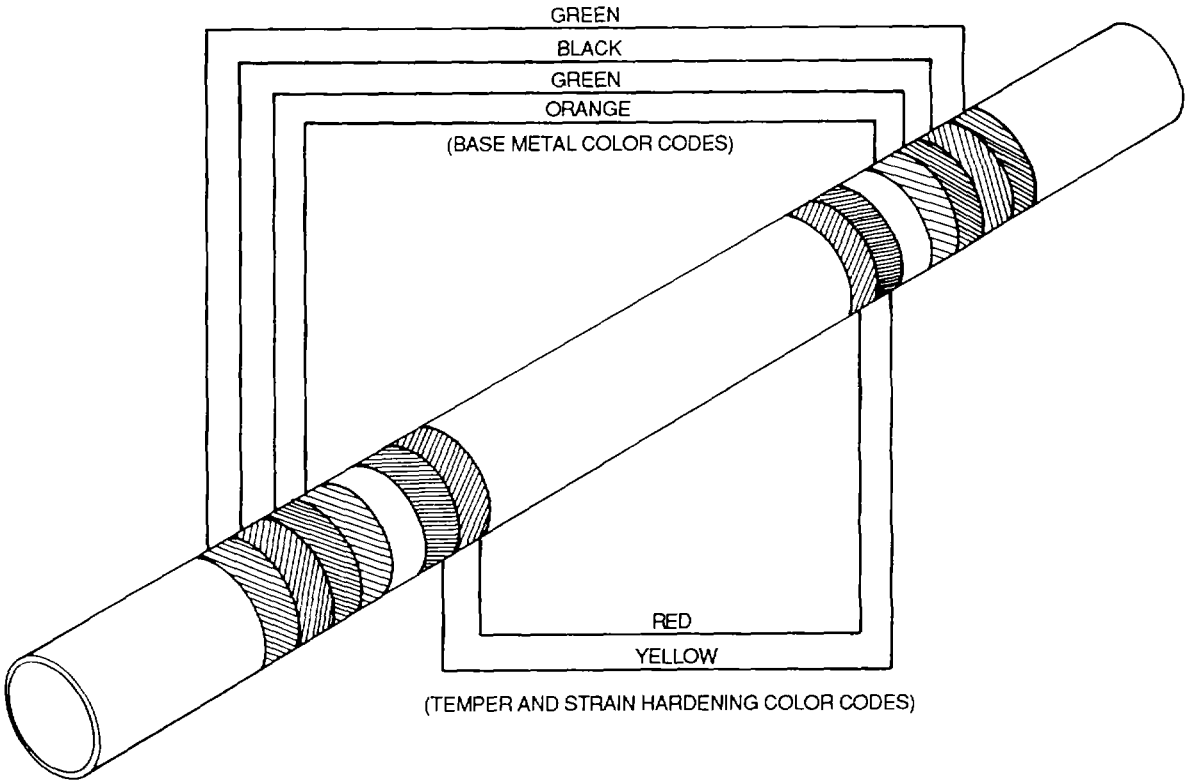

Figure 5-6. Steel Identification Marking Example

Table 5-3. Old Color Code Cross Reference

Old color	Last digits, steel number	New color
Narrow Stripe		
Red and black	00	Black and black
Red	10	Blue and black
Red and green	12	Blue and green
Red and white	15	Blue and orange
Yellow	20	Green and black
Yellow and white	25	Green and orange
Black	30	Olive drab and black
Black and white	35	Olive drab and orange
Green	40	Yellow and black
Green and white	45	Yellow and orange
Blue	50	Orange and black
Blue and brown	55	Orange and orange
Brown	60	Red and black
Brown and white	65	Red and orange
Olive drab (khaki)	95	Gray and orange
Broad Stripe		
Red	10	Blue and black
Red and yellow	13	Blue and olive drab
Yellow	23	Green and olive drab
Yellow and green	25	Green and orange
Green	31	Olive drab and blue
Green and white	40	Yellow and black
Black and white	41	Yellow and blue
Blue and white	43	Yellow and olive drab
Red and black	46	Yellow and red
White	61	Red and blue
Black and yellow	86	White and red
Black and green	87	White and maroon

(b) Medium-carbon steel. Steel containing carbon in percentages ranging from 0.30 to 0.50 percent is classed as medium carbon steel. This steel is especially adaptable for machining, forging, and where surface hardness is important. Certain rod ends, light forgings, and parts such as Woodruff keys, are made from SAE 1035 steel.

(c) High-carbon steel. Steel containing carbon in percentages ranging from 0.50 to 1.05 percent is classed as high carbon steel. The addition of other elements in varying quantities adds to the hardness of this steel. In the fully heat-treated condition it is very hard and will withstand high shear and wear, but little deformation. It has limited use in aircraft construction. SAE 1095 in sheet form is used for making flat springs and in wire form for making coil springs.

(2) Nickel steels. Nickel steels are produced by combining nickel with carbon steel. Some benefits derived from the use of nickel as an alloying agent are as follows:

Table 5-4. Specifications, Cross Reference of Nearest Corresponding Numbers

SAE/AISI	Form	Federal	Military	AMS[1]	ASTM[2]
1020	Bars	QQ-S-637	MIL-S-11310		A107-61T
					A108-61T
	Bars, Blooms, Billets & Slabs				A107-61T
			MIL-S-16974		A108-61T
(SAE 1009)	Plate	QQ-S-635			A201-61T
	Sheet & Strip	QQ-S-698	MIL-S-7952	5045	
	Tubing		MIL-S-3520		
	Wire	QQ-W-461		5032	
					A545
					A546
					A547
					A548
					A549
1022	Bars		MIL-S-11310		A108-61T
	Bars, Billets & Blooms		DOD-F-24669/1		A273-63T
	Bars & Forgings			5070	
	Plates				A515
					A516
					A2048
					A306
	Sheet & Strip	QQ-S-698			
	Tubing				
	Wire				A545
					A546
					A547
					A548
					A549
1025	Bars		MIL-S-11310		A107-61T
					A108-61T
	Castings		MIL-S-15083		A27-62T
					A216-63T
	Sheet & Strip	QQ-S-698	MIL-S-7952		
	Tubing		MIL-T-3520	5075, 5077	
			MIL-T-5066	5075, 5077	
1035	Bars, Forging & Tubing			5080	
	Plate, Carbon	QQ-S-635			A284-55T
	Plate, Marine Boiler				A289-55T
					A515
					A516
					A2048
					A306

See footnotes at end of table

Table 5-4. Specifications, Cross Reference of Nearest Corresponding Numbers - CONT

SAE/AISI	Form	Federal	Military	AMS[1]	ASTM[2]
1035	Shapes, Bars & Plate				36/A36M
— continued	Wire	QQ-W-461			A545
					A546
					A547
					A548
					A549
1095	Bars		MIL-S-8559	5132	A108-61T
	Bars, Blooms, Billets & Slabs		DOD-F-24669/1		
			MIL-S-16788		
	Bars & Forgings		MIL-S-46033	513-1	A107-61T
	Sheet & Strip	QQ-S-698	MIL-S-11713		
			MIL-S-7947	5121	
	Wire	QQ-W-428			A228
4130	Bars, Blooms, Billets & Slabs		DOD-F-24669/1		A274-63T
	Bars, Rods & Forgings		MIL-S-6758	6370	A304
	Plate	QQ-S-626		6351	
	Plate, Sheet & Strip		MIL-S-18727	6350 & 6351	
	Tubing, Seamless		MIL-T-6736	6360, 6361 6362, 6371	
	Tubing, Welded		MIL-T-6736		
	Wire				A545
					A546
					A547
					A548
					A549
4135	Bars				A304
	Bars & Blooms		DOD-F-24669/1		
	Plate, Sheet & Strip Tubing		MIL-T-6735		6365
4140	Bars, Blooms & Billets		DOD-F-24669/1		
	Bars, Rods & Forgings		MIL-S-5626	6882	A304
	Plates	QQ-S-626			
	Tubing			6381 & 6390	
	Wire				A545
					A546
					A547
					A548
					A549

See footnotes at end of table

Table 5-4. Specifications, Cross Reference of Nearest Corresponding Numbers - CONT

SAE/AISI	Form	Federal	Military	AMS[1]	ASTM[2]
4340	Bar				A304
	Bars, Blooms & Billets		DOD-F-24669/1		
	Bars & Forgings		MIL-S-5000	6415E	
	Bars & Reforgings		MIL-S-5000		
	Plate, Sheet & Strip			6359	
	Tubing			6415	
8630	Bars, Blooms, Billets & Slabs		DOD-F-24669/1		
	Bars & Forgings		MIL-S-6050	6280	A304
	Bars, Rods & Forgings		MIL-S-6050	6282	
	Plate	QQ-S-626		6355F	
	Plate, Sheet & Strip		MIL-S-18728	6355F	
	Sheet & Strip				
	Tubing, Seamless		MIL-T-6736	6281, 6530	
	Tubing, Welded		MIL-T-6736	6550	
	Wire				A545 A546 A547 A548 A549
8735	Bars, Rods & Forgings		MIL-S-6098	6320	
	Sheet, Strip & Plate			6357	
	Tubing		MIL-T-6735	6282 & 6535	
8740	Bars				A304
	Bars, Rods & Forgings		MIL-S-6049	6322D, 6325C 6324A, 6327C	
	Plate	QQ-S-626		6358	
	Plate, Sheet & Strip			6358	
	Tubing, Seamless			6323	
	Wire				A545 A546 A547 A548 A549
Type 301 30301	Sheet, Strip & Plate	QQ-S-766	MIL-S-5059		A167-61T

See footnotes at end of table

SAE/AISI	Form	Federal	Military	AMS[1]	ASTM[2]
Type 302 30302	Bars			5636, 5637	A276-60T
	Bars, Billets & Reforgings		DOD-F-24669/6		
	Bars, Shapes & Forgings	QQ-S-763	MIL-S-7720		
	Pins, Cotter	FF-P-386		7210	
	Plate, Sheet & Strip				A167-61T A240-61T A263 A264 A265
	Rivets			7228	
	Sheet & Strip (Clad)	QQ-S-766	MIL-S-5059		
	Wire, Spring Temper				A313 A580
Type 303 30303	Bars, Billets, Reforging		DOD-F-24669/6		
	Bars, Shapes & Forgings	QQ-S-763	MIL-S-7720	5640	
Type 304 30304	Castings		MIL-S-867	5370, 5371	
	Plate, Sheet & Strip	QQ-S-766	MIL-S-4043	5511	A240-61T A264-44T
	Tubing		MIL-T-6845 MIL-T-8504 MIL-T-8506 MIL-T-5695	5566	
	Wire			5697	A167-61T A313 A580
Type 316 30316	Bar, Billet & Reforging		DOD-F-24669/6		
	Bar, Shape & Forging	QQ-S-763	MIL-S-7720	5648	
	Casting		MIL-S-867	5361	
	Pipe (Stainless) Welded		MIL-P-1144		
	Sheet, Strip & Plate	QQ-S-766	MIL-W-5059	5524	
	Tubing, Seamless			5573	
	Wire				A313 A580
Type 321 30321	Bars, Billets, Reforging		DOD-F-24669/6		
	Bars, Shapes, Forgings, Tubing	QQ-S-763		5645	
	Plate, Sheet & Strip	QQ-S-766		5510	A263 A264 A265

See footnotes at end of table.

Table 5-4. Specifications, Cross Reference of Nearest Corresponding Numbers - CONT

SAE/AISI	Form	Federal	Military	AMS[1]	ASTM[2]
Type 321	Tubing, Seamless		MIL-T-8606	5570	
30321	Tubing, Welded, Thin Wall		MIL-T-8887	5559	
— continued	Tubing, Flexible	WW-H-1053			
Type 347	Bars, Shapes, Forgings	QQ-S-763		5641	
30347	& Tubing				
	Castings		MIL-S-867		
	Plate, Sheet & Strip	QQ-S-766			
	Rivets			7229	
	Rods, Welding		AWS A5 9-81		
			AWS A5 14-83		
	Sheet & Strip			5512	
	Tubing	WW-H-1053	MIL-T-8606		
			MIL-T-8808		
	Wire, Welding		MIL-R-5031	5681	
Type 416	Bars, Billets, Reforging		DOD-F-24669/6		
51416	Bars, Shapes & Forgings	QQ-S-763		5610	
Type 431	Bars, Billets, Reforging		DOD-F-24669/6		
	Bars, Shapes, Forgings	QQ-S-763			
	Castings, Sand			5372	
Type 440					
51440					
A, B, C, F & FSE	Bars, Shapes, Forgings	QQ-S-763		5631 (440A) 5352 (440C)	

1 Aeronautical Material Specification
2 American Society for Testing and Materials

- It lowers the percentage of carbon needed for hardening. This makes the steel more ductile and less susceptible to uneven stress.
- It lowers the critical temperature range for heating and cooling, and permits the use of lower heating temperatures for hardening.
- Hardening of nickel steels at moderate rates of cooling reduces internal stress and warpage, and permits deeper and more uniform hardening.
- The low heat-treating temperatures reduce the danger of overheating, excessive grain growth, and the resulting brittleness.
- Nickel steels have good mechanical properties after quenching and tempering. Except for very thin sections or parts, they have greatly improved elastic properties, impact resistance, and toughness.

(3) Chromium steels. Chromium steel is high in hardness, strength, and corrosion resistant properties. SAE 51335 steel is particularly adaptable for heat treated forgings which require greater toughness

and strength than may be obtained in plain carbon steel. It may be used for such articles as the balls and rollers of anti-friction bearings.

(4) Chromium-nickel steels. Chromium and nickel in various proportions mixed with steel form the chrome-nickel steels. The general proportion is about two and one-half times as much nickel as chromium. For all ordinary steels in this group the chromium content ranges from 0.45 to 1.25 percent, while the nickel content ranges from 1 to 2 percent. Both nickel and chromium influence the properties of steel, nickel toughens it, while chromium hardens it. Chrome-nickel steel is used for machined and forged parts requiring strength, ductility, toughness and shock resistance. Parts such as crankshafts and connecting rods are made of SAE 3140 steel.

(5) Corrosion-resistant steels. Chrome-nickel steel containing approximately 18 percent chromium and 8 percent nickel is known as corrosion-resistant steel. It is usually identified as AISI types 301, 302, 303, 304, 304L, 309, 316, 316L, 321, 347, 347F or Se, etc., however, the basic 18-8 chrome-nickel steel is type 302. The other grades/types have been modified by changing or adding alloying elements to that contained in the basic alloy. The alloys are varied to obtain the required mechanical properties for some specific purpose such as improving corrosion resistance or forming machining, welding characteristics, etc.

(6) Chrome-vanadium steels. The vanadium content of this steel is approximately 0.18 percent and the chromium content approximately 1.00 percent. Chrome-vanadium steels when heat-treated have excellent properties such as strength, toughness, and resistance to wear and fatigue. A special grade of this steel in sheet form can be cold-formed into intricate shapes. It can be folded and flattened without signs of breaking or failure. Chrome-vanadium steel with medium high carbon content (SAE 6150) is used to make springs Chrome-vanadium steel with high carbon content (SAE 6195) is used for ball and roller bearings.

(7) Chrome-molybdenum steels. Molybde-num in small percentages is used in combination with chromium to form chrome-molybdenum steel; this steel has important applications in aircraft. Molybdenum is a strong alloying element, only 0.15 to 0.25 percent being used in the chrome-molybdenum steels, the chromium content vanes from 0.80 to 1.10 percent. Molybdenum raises the ultimate strength of steel without affecting ductility or workability. Molybdenum steels are tough, wear resistant, and harden throughout from heat treatment. They are especially adaptable for welding and for this reason are used principally for welded structural parts and assemblies. Tubing made from 4130 steel is used for structural parts such as welded fuselages, engine mounts, and gear structures.

5-7. Aluminum and Aluminum Alloys . Aluminum is a white, lustrous metal, light in weight and corrosion resistant in its pure state. The thermal conductivity of aluminum is very high. It is ductile, malleable, and nonmagnetic. Commercial aluminum, usually referred to as pure aluminum, ordinarily contains not more than one percent of other elements. These elements, chiefly iron and silicon, in such small percentages are regarded as impurities. Aluminum combined with various percentages of other metals, generally copper, manga-nese, and magnesium, form the aluminum alloys which are used in aircraft construction. Aluminum alloys are lightweight and strong. They do not possess the corrosion resistance of pure aluminum and are generally treated to prevent deterioration. Alclad is an aluminum alloy with a protective coating of aluminum to make it almost equal to the pure metal in corrosion resistance.

a. Identification. Aluminum and its alloys are identified by the SAE numbering system and painting.

(1) SAE numbering system. The SAE numbers for aluminum alloys are four-digit numbers which primarily show the major alloying element.

(a) First digit. Table 5-5 shows the designations for the alloy groups The first digit indicates the main alloying element.

Table 5-5. Major Alloying Elements

1XXX	Aluminum 99.00% minimum purity and greater
2XXX	Copper
3XXX	Manganese
4XXX	Silicon
5XXX	Magnesium
6XXX	Magnesium and silicon
7XXX	Zinc
8XXX	Other element
9XXX	Unused series

(b) Second digit. The second digit of the designation indicates control of impurities. If the second digit is 0, it indicates that there is no special control of impurities, while numbers 1-9 indicate special control of one individual impurity. Thus 1040 indicates 99.4 percent pure aluminum without special impurity control, and 1140 or 1240 indicate the same material with special control on one or more impurities.

(c) Last two digits. The last two of the four digits in alloy groups 2XXX through 8XXX merely serve to designate the alloy by its former number, i.e., 245,525, etc. These numbers are shown in table 5-6.

(d) Temper designations. The tempers of aluminum alloys are produced essentially by three methods. These methods are cold working (strain hardening), heat treatment and a combination of the two. The various alloys of aluminum are either classed as non-heat-treatable or heat-treatable.

1 Non-heat-treatable alloys. Alloys 1100, 3003, alclad 3003, 3004, alclad 3004, 5050, and 5052 are non-heat-treatable alloys. The tempers of these alloys are designated by symbols as follows:

-F	As fabricated
-O	Annealed
-H1	Strain hardened only
-H2	Strain hardened, then partially annealed
-H3	Strain hardened, then stabilized

The degree of strain hardening is shown by a second number as shown below:

2 = 1/4 hard

4 = 1/2 hard

6 = 3/4 hard

8 = Full hard

Thus, 5052 aluminum stock that is strain hardened 3/4 hard, then partially annealed, would be marked 5052-H26.

2 Heat-Treatable alloys. Alloys 2024, alclad 2024, alclad 2014, 6061, 7075, alclad 7075, and 7178 are classed as heat-treatable alloys. The mechanical properties of these alloys is improved by heat treatment or by a combination of heat treatment and strain hardening. The tempers of these alloys are designated by the following symbols:

-F	As fabricated
-O	Annealed
-W	Solution heat treated - unstable temper
-T	Treated to produce stable tempers other than -F or O
-T2	Annealed (cast products only)
-T3	Solution heat treated and then cold worked
-T4	Solution heat treated
-T5	Artificially aged only
-T6	Solution heat treated and then artificially aged
-T7	Solution heat treated and stabilized
-T8	Solution heat treated, cold worked and then artificially aged
-T9	Solution heat treated, artificially aged, and then cold worked
-T10	Artificially aged and then cold worked

Numbers added to the above denote a modified process of tempering. For example, a "6" following " T3" indicates a different amount of cold working than for just " T3" . These numbers are arbitrarily assigned, and specifications should be utilized to determine specific data.

3 Wrought aluminum designations. The following standard digits have been assigned for wrought products in all alloys:

-TX51	Stress relieved by stretching
-TX52	Stress relieved by compressing
-TX53	Stress relieved by thermal treatment
-T42	Solution heat treated by the user with properties different from " T4" temper
-T62	Solution heat treated and artificially aged by the user with properties different from "76" temper

Exceptions not conforming to these definitions are 4032-T62, 6101-T62, 6062-T62, 6063-T42, and 6463-T42.

(2) Painting. Every effort should be made to identify the type of aluminum alloy, when it has not been marked by the mill, and identification indicated by color marking. The marking should consist of painting color bands on each tube, bar, rod, sheet or plate, using enamel, Federal Specification TT-E-489.

Table 5-6. Aluminum Alloy Designation and Conversions to 4 Digit System

Old	New	Major alloying element
2S	1100	None (aluminum 99.00 percent)
3S	3003	Manganese
4S	3004	Manganese
11S	2011	Copper
14S R301 core	2014	Copper
17S	2017	Copper
A17S	2117	Copper (special control of impurities)
18S	2018	Copper
24S	2024	Copper
19S	2219	Copper
32S	4032	Silicon
50S	5050	Magnesium
52S	5052	Magnesium
56S	5056	Magnesium
61S	6061	Magnesium & silicon
62S	6062	Magnesium & silicon
63S	6063	Magnesium & silicon
72S	7072	Zinc
75S	7075	Zinc
78S	7178	Zinc
79S	7079	Zinc

NOTE

Aluminum alloys that require marking, but cannot be identified and marked, should not be used for repair of aircraft.

(a) Method. There are ten colors used in this identification marking system to represent numbers 1, 2, 3, 4, 5, 6, 7, 8, 9, and 0 (Refer to table 5-7.). These ten colors are also used to represent letters, F, H, O, T, W, A, B, C, D, and S. A combination of these colors, representing a combination of numbers and letters, are used to mark material to denote its material designation. For example, aluminum alloy with material designation 2218-T6 is marked green, space, green, blue, white, space, yellow, and red (see figure 5-7). The commercial designation, AISI (American Iron and Steel Institute), and SAE (Society of Automotive Engineers) numbers are utilized as material designation numbers.

(b) Procedure The following procedure will be followed for marking aluminum stock.

WARNING

Drycleaning solvent is flammable and solvent vapors are toxic. Use P-D-680, Type II Solvent in a well-ventilated area. Keep away from open flames. Avoid prolonged solvent contact with skin.

Table 5-7. Color Codes

Color	Equivalent number	Equivalent letter
Black	0	S
Blue	1	F
Green	2	H
Olive drab	3	O
Yellow	4	T
Orange	5	W
Red	6	A
Maroon	7	B
White	8	C
Gray	9	D

1 Clean all grease, dirt, and foreign matter from the surface to be painted using drycleaning solvent, Federal Specification P-D-680.

2 Using paint of appropriate color, mark each item of material with parallel stripes of equal width, 1/2 to 3/4 inch wide, placed side by side and in sequence so that when read from nearest end, of bar towards the middle, the material designation is shown (see figure 5-7). Colors of each band must be in accordance with table 5-2 Cross-reference of old and new color code is presented in table 5-8.

3 When two or more like colors appear adjacent to each other, leave a space between the stripes of not more than 1/4 inch.

4 Leave a space of 3/4 to 1 inch between basic color number stripes and temper and strain hardening color stripes.

(3) Distinguishing heat-treatable and non-heat treatable alloys. All aluminum base sheets will be marked with the specification number or code marking on approximately every square foot of material. If for any reason this identification is not on the material, it is possible to separate the heat-treatable alloys from the non-heat-treatable alloys by immersing a sample of the material in a 10 percent solution of caustic soda (sodium hydroxide). The heat-treatable alloys will turn black due to the copper content, whereas the others will remain bright. This test applies to the alloys containing copper. In the case of Alclad, the surface will remain bright but there will be a dark area in the middle when viewed from the edge.

b. Alloy Characteristics and Uses. The following aluminum alloys are used in aircraft construction.

(1) Aluminum 1100. This aluminum is used where strength is not an important factor, but where low weight and low corrosion are desirable. This aluminum is used for fuel tanks, cowlings, oil tanks, and for the repair of wingtips and tanks.

(2) Alloy 3003. Alloy 3003 is similar to 1100, and is generally used for the same purposes. It contains a small percentage of manganese and is stronger and harder than 1100 aluminum.

(3) Alloy 2014. Alloy 2014 is used for extruded shapes and forgings.

Table 5-8. Cross Reference of Old and New Color Code

Aluminum alloy number	Old color	New color
1100	White	Green
3003	Green	Olive drab
2014	Gray	Blue and yellow
2024	Red	Green and yellow
5052	Purple	Orange and green
6053	Black	Orange and olive drab
6061	Blue and yellow	Red and blue
7075	Brown and yellow	Maroon and orange

(4) Alloy 2017. Alloy 2017 is used for rivets, stressed skin covering, and other structural members.

(5) Alloy 2024. Alloy 2024, plain, and with Alclad coating, is used for heat-treated parts, airfoil covering, and fittings it is stronger than 2017 and may be used where 2017 is specified.

(6) Alloy 2025. Alloy 2025 is used extensively for propeller blades.

(7) Alloy 5052. Alloy 5052 s used for fuel lines, hydraulic lines, fuel tanks, and wingtips.

(8) Castalloys. Cast aluminum alloys are used for cylinder heads, crankcases, fuel injectors, carburetors, and landing gear wheels.

c. Corrosion Resistance. Pure aluminum has the best corrosion resistance. As aluminum is alloyed, its resistance drops. Alloys are usually treated to prevent

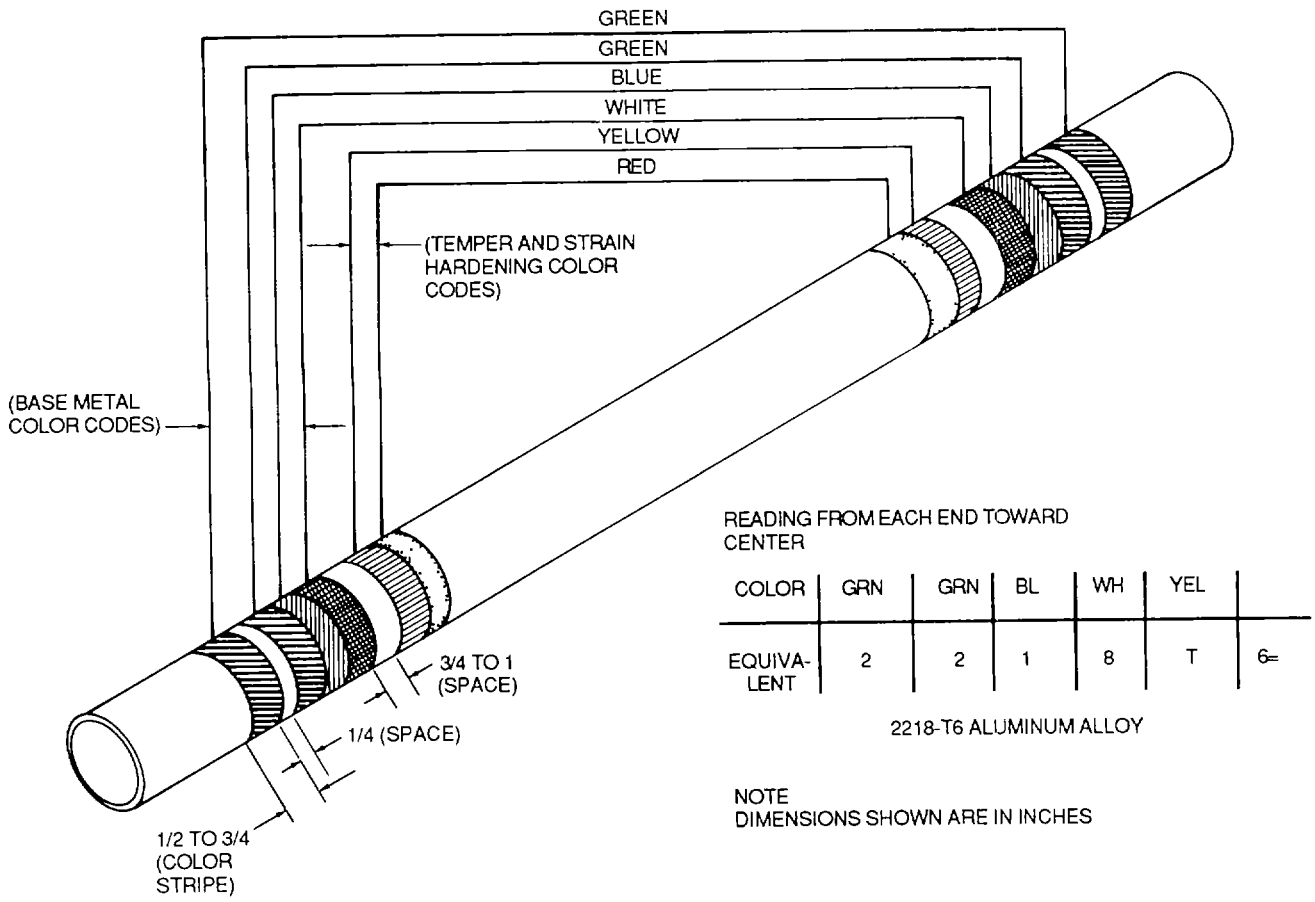

Figure 5-7. Aluminum Identification Marking Example

corrosion. Alclad is an aluminum alloy, usually in sheet form, that has a protective coating of pure aluminum to make it almost equal to pure aluminum in corrosion resistance. See figure 5-8 for an example of an alclad sheet

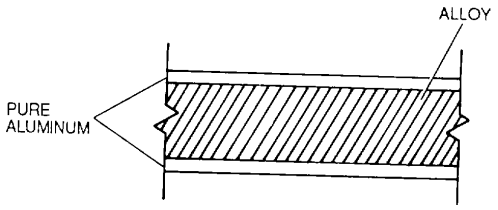

Figure 5-8. Alclad Construction

d. Shop Working Practice. The methods and processes of working aluminum are forming, riveting, welding, and annealing.

(1) Forming. Refer to Chapter 6 for procedures for forming aluminum.

(2) Riveting. Refer to Chapter 7 for procedures for riveting aluminum.

(3) Welding. Aluminum alloys can be welded, however, the techniques vary with each alloy. Therefore, TM 1- 1500-204-23-8 and TM 9-237 should be consulted for detailed procedures.

(4) Annealing. Annealing is loosely defined as partial softening following the hardening induced by cold-working. Higher-strength conditions can only be obtained by a controlled amount of cold-work prior to aging.

e. Heat-Treatment Methods. Two types of heat treatment are applicable to aluminum alloys- the solution treatment and the precipitation treatment. Certain alloys develop their full strength from the solution treatment while others require both treatments for maximum strength.

(1) Solution treatment. The solution treatment consists of heating the metal to the temperature required to cause the constituents to go into solid solution, holding or soaking the parts at this temperature for a sufficient time to complete the solution, followed by rapid quenching in cold water to retain the condition. The time of transfer from the furnace to the quench tank must not exceed seven seconds.

(2) Precipitation treatment. The precipitation treatment consists of aging the parts previously subjected to the solution treatment at a definite temperature for a considerable time. During the aging period a portion of the alloying constituents precipitate out in the form of extremely fine particles, greatly increasing the strength of the alloy.

f. Aging Time and Temperature. Precipitation (age) hardening consists of aging material previously subjected to solution heat treatment. This is done naturally (at room temperature), or artificially. Artificial aging is accomplished by heating aluminum alloy to a specific temperature and holding it for a specified period of time. During this operation, the alloying agents in solid solution precipitate out. As this progresses, the strength of the material increases until the maximum is reached. The increase in strength is due to the uniform alignment or formation of the molecule structure. Aging beyond the maximum point causes the strength to decline until a stable condition is reached. This overaging is usually done to increase an alloy's resistance to corrosion, especially alloys with high copper content. Table 5-9 shows aging times, temperatures, and conditions.

g. Heat-Treating Procedures. Temperature and quenching will be kept within close limits when heat treating aluminum. Following are general practices for heat-treatment of these alloys.

NOTE

MIL-H-6088, Heat Treatment of Aluminum Alloys, will be the control document for heat treatment of aluminum alloys used on aerospace equipment. For complete description of aluminum heat treat requirements, refer to latest issue of MIL-H-6088.

(1) Temperature The temperature for solution heat-treating is usually chosen as high as possible without exceeding the melting point of any element in the alloy. The temperature selected must put all of the soluble elements into solid solution. Table 5-10 shows heat-treating temperatures for aluminum alloys.

(2) Heating time. The heating time is commonly called soaking time. It increases with the thickness of the part to be treated. Solution heat-treatment should be kept to the minimum time required to obtain the desired physical results. With clad materials, prolonged heating may defeat the purpose of the cladding by excessive diffusion of copper and other soluble elements into the cladding. Table 5-11 contains the recommended approximate soaking times for various

Table 5-9. Precipitation (Aging) Treating Temperatures, Times and Conditions

Alloy and temper or condition before aging	Aging time (hours)[2]	Aging temp (degrees °F)	Temper after aging
Wrought Alloys (Excluding Forgings)			
2017 - as quenched (w)	96	Room	2017-T4
2117 - as quenched (w)	96	Room	2117-T4
2024 - as quenched (w)	96	Room	2024-T4
6061 - as quenched (w)	96	Room	6061-T4
6061-T4	7 1/2 - 8 1/2	340-360	6061-T6
2020-W	18	310-360	2020-T6
2024-T41-T42	16	370-380	2024-T61-T62
2024-T4 (alternate for sheet)	11-13	370-380	2024-T6
2024-T3	11-13	370-380	2024-T81
2024-T36	7-9	370-380	2024-T86
2014-T41-T42	8-12	305-330	2014-T61-T62
2014-T4 (alternate for plate)	17-20	305-330	2014-T6
6066-T4	7 1/2 - 8 1/2	340-360	6066-T6
6061-T4	7 1/2 -8 1/2	340-360	6061-T6
7075-W1	22 minimum	240-260	7075-T6
7178-W	22 minimum	240-260	7178-T6
6063-F	1-2	440-460	6063-T5
7079 - as quenched (w)	5 days at room temperature following 48 hours at 230-250°F	7079-T6	

See footnotes at end of table.

Table 5-9. Precipitation (Aging) Treating Temperatures, Times and Conditions - CONT

Alloy and temper or condition before aging	Aging time (hours)*	Aging temp (degrees ° F)	Temper after aging
Forging Alloys			
2014-T4	5-14	340-360	2014-T6
2014 - as quenched	96 minimum	Room	2014-T4
2017 - as quenched	96 minimum	Room	2017-T6
2018-T4	4-12	330-350	2018-T6
2025-T4	6-14	330-350	2025-T6
4032-T4	4-12	330-350	4032-T6
6151-T4	4-12	330-350	6151-T6
7075-W	22 minimum	230-260	7075-T6
X7079	5 days at room temperature followed by 48 hours at 230-250 ° F		X7079-T6
Sand Cast Alloys			
142-T41	1-3	400-450	142-T61
195-T4	1-3	300-320	142-T6
S195-T4	1-4	300-320	S195-T6
220-W	96 minimum	Room	220-T4
319-T4	1-6	300-320	319-T6
335-T4	1-6	300-320	335-T6
356-T4	1-6	300-320	356-T6
356-F	6-12	430-450	356-T6
40	9-11	345-365	40-E
40-	21 days	Room	40-E

See footnotes at end of table.

Table 5-9. Precipitation (Aging) Treating Temperatures, Times and Conditions - CONT

Alloy and temper or condition before aging	Aging time (hours)*	Aging temp (degrees ° F)	Temper after aging
Permanent Mold Cast Alloys			
142-T41	1-3	400-450	142-T61
B195-T4	1-8	300-320	B195-T6
319-T4	1-6	300-330	319-T6
355-T4	1-6	300-320	355-T6
356-T4	1-6	300-320	356-T6
A132-T45	14-18	300-350	A132-T65

[1] Alternate aging treatment for 7075-W sheet only; in thicknesses less than 0.500 inch: Heat at 230° - 250° F for 3-4 hours, then heat 315° - 330° F for 3-4 hours. The temperature may be raised directly from the lower to the higher temperature, or load may be allowed to cool between the two steps of the treatment.

[2] Time is soak time after recorder is at temperature, for 0.500 inch thickness or less. Add 1/2 hour for each additional 1/2 inch of thickness.

alloys. The time at temperature (soaking time) is measured from the time the metal reaches the minimum limit of the temperature range. In the case of thick material the controlling factor would be when the center (core) reached the minimum temperature. The soaking period will vary from 10 minutes for thin sheet to approximately 12 hours for the thicker materials, such as heavy forgings. A general guide to use is approximately one hour for each inch of cross-sectional thickness.

(3) Reheat-treatment. Heat-treatable alloys can be repeatedly solution heat-treated without harmful effects other than high temperature oxidation. This can be retarded by the use of either sodium or potassium fluoroborate during heating. For clad sheet, the number of treatments is limited due to the increased diffusion of the core and cladding. See table 5-12 for these limitations.

NOTE

Heat treatment of a previously heat-treated material is classified as a reheat treatment, Therefore, the first heat treatment of material purchased in the heat treated condition is a reheat treatment. Insofar as this table is concerned, annealing and precipitation treatments are not considered heat treatments.

(4) Quenching. The basic purpose for quenching is to prevent the immediate reprecipitation of the soluble elements after they are in a solid solution. Rapid quenching is required to obtain the best physical properties. The recommended time interval between removal from the heat and immersion is 7 seconds or less. Refer to table 5-13 for specific quench delay times. Allowing the metal to cool before quenching promotes the danger of intergranular corrosion and slightly affects the hardness. This is caused by reprecipitation along the grain boundaries. There are three types of quenching. The one used depends on the item, alloy, and the properties desired.

Table 5-10. Heat Treating (Soaking) Temperatures

Alloy designation	Solution heat treat temperature	Temper
Wrought Alloys (except forgings alloys)		
2014	925-945°F (496-507°C)	2014-T4
2017	925-945°F (496-507°C)	2017-T4
2117	925-950°F (496-510°C)	2117-T4
2024	910-930°F (488-499°C)	2024-T4
6061	960-1010°F (516-543°C)	6061-T4
6062	960-1010°F (516-543°C)	6062-T4
6066	960-980°F (516-527°C)	6066-T4
7075 (rolled or drawn)	860-930°F (460-499°C)	7075-W
7075 (extruded)	860-880°F (460-471°C)	7075-W
7075 (sheet 051 In thickness or less)	910-930°F (488-499°C)	7075-W
7178 (rolled or drawn)	860-930°F (460-499°C)	7178-W
7178 (extruded)	860-880°F (460-471°C)	7178-W
70791	820-840°F (438-449°C)	7079-W
Forgings Alloys		
2014	925-950°F (496-510°C)	2014-T4
2017	925-950°F (496-510°C)	2017-T4
2018	940-970°F (504-521°C)	2018-T4
Forgings		
2025	950-970°F (510-5210°C)	2025-T4
4032	940-970°F (504-521° C)	4032-T4

See footnote at end of table

Table 5-10. Heat Treating (Soaking) Temperatures - CONT

Alloy designation	Solution heat treat temperature	Temper
Forgings - continued		
6151	950-980°F (510-527°C)	6151-T4
6061	960-1010°F (516-543°C)	6061-T4
70751	360-890°F (182-477°C)	7075-W
70791	820-840°F (438-449°C)	7079-W
Sand Cast Alloys		
122	930-960°F (499-516°C)	T4
142	950-980°F (510-527°C)	T4
195	940-970°F (504-521°C)	T4
220	800-820°F (427-438°C)	T4
319	920-950°F (493-510°C)	T4
355	960-990°F (516-532°C)	T4
356	980-1010°F (527-543°C)	T4
Permanent Mold Cast Alloys		
122	930-960°F (499-516°C)	T4
A132	940-970°F (504-521°C)	T4
142	950-980°F (510-527°C)	T4
B195	935-965°F (502-518°C)	T4
355	960-990°F (516-532°C)	T4
356	980-1010°F (527-543°C)	T4

[1] Other temperatures may be required for certain sections and conditions.

Table 5-11. Soaking Time for Solution Treatment of Cast Alloys

Alloy	Time (hours)
Sand Cast Alloys	
122	6-18
142	2-10
195	6-18
S195 (105)	6-24
220	12-24
3-19	6-18
355	6-18
356	6-18
Permanent Mold Cast Alloys	
122	6-18
A132	6-18
142	2-10
B195	4-12
355	6-18
356	6-18

(a) Cold wafer. Small fakings and small articles made from sheet, extrusions, and tubing are normally quenched in cold water. The temperature before quenching should be 85° F (29° C) or less. Sufficient cold water should be circulated within the quenching tanks to keep the temperature rise under 20° F (10° C). This type of quench will insure good resistance to corrosion which is particularly important when heat-treating 2017 and 2024.

NOTE

Quench delay time begins at the instant furnace door begins to open or at the instant any portion of a load emerges from a salt bath and when portion of the load is immersed in the (water) quench tank. The maximum quench delay may be exceeded (usually confined to large sections or loads) if temperature will be above 775° F (413° C) when quenched.

Table 5-12. Reheat Treatment of Alclad Alloys

Thickness (inches)	Maximum No. of reheat treatment permissible
Deleted	
0.125 and less	1
over 0.125	2

Table 5-13. Recommended Maximum Quench Delay, Wrought Alloys (for immersion type quenching)

Nominal thickness (inches)	Maximum time (seconds)
up to 0.016	5
0.017 to 0.031	7
0.032 to 0.091	10
0.091 and over	15

(b) Hot water. Large forgings and heavy sections can be quenched in hot (150° - 180° F (66° - 82° C) or boiling water. This type of quench is used to minimize distortion and cracking which are produced by the unequal temperatures obtained during the quenching operation. The hot water quench will also reduce residual stresses which improves resistance to stress corrosion cracking.

(c) Spray. Water sprays are used to quench parts formed from alclad sheet and large sections of most alloys. Principal reasons for using this method is to minimize distortion and to alleviate quench cracking. This system is not usually used to quench bare 2017 and 2024 due to the effect on their corrosion resistance. The parts quenched by this medium should pass the corrosion test required for the item involved (refer to specification MIL-H-6088).

(5) Annealing. Aluminum alloys are annealed to remove the effects of solution heat-treatment and strain hardening. It is utilized to help facilitate cold working. Parts work-hardened during fabrication are annealed at various stages of the forming operation so that complicated shapes can be formed.

NOTE

Annealed aluminum parts shall not be used for parts or fittings on aircraft or missiles unless specified by drawings or other approved engineering data.

(6) Heat-treatment of rivets. The heat-treatable alloys commonly used for rivets are 2117, 2017, and 2024. See figure 5-9 for identification.

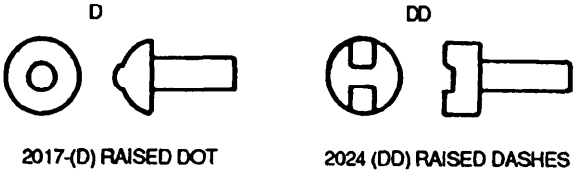

Figure 5-9. Heat-Treatable Rivet identification

(a) 2117 rivets. If supplied in T-4 temper, no further treatment is required. This rivet is identified by a dimple in the center of the head.

(b) 2017 rivets. These rivets, sometimes called icebox rivets, must be heat-treated prior to installation. Heat to 940° (±10°)F for 30 minutes in a circulating air furnace, 1 hour in a still air furnace, or 30 minutes in a molten salt bath. Quench in water. These rivets must be driven within 20 minutes after quenching, or refrigerate at 32° F (0° C) or lower, which will delay the aging time 24 hours. If stored in dry ice, the aging will be delayed for two weeks. If either time is exceeded, reheat-treating is required.

(c) 2024 rivets. The same conditions apply for these rivets as for 2017, except they must be heat-treated at 920° (±10°)F (493° (±6)° C).

NOTE

Rivets which have been anodically oxide-coated should not be reheat-treated in direct contact with molten salts more than 5 times.

h. Insulation of Dissimilar Metals. Refer to paragraph 8-6g for procedures to prevent corrosion between dissimilar metals.

i. Aluminum Alloy Sheet Substitution. Table 5-14 gives factors which, when multiplied by the thickness of the sheet to be replaced, give the thickness of the appropriate sheet substitutes. The following rules apply to this substitution.

(1) Rule number 1. The substitute material shall provide cross-sectional strength in tension, compression, shear, and bearing at least equal to that of the original material. Most parts in an aircraft structure carry a tension, compression, shear, and bearing load at some time during the operation of the aircraft. The magnitude of these loads seldom is known when repairs are to be made. Therefore, it is necessary that the tensile, compression, shear, and bearing strengths of a part made of substitute material be at least equal to those of the original part. Strict adherence to rule 1 leads to the following paradox: If in one application 2024-T4 is substituted for 2024-T6 and in another application 2024-T6 is substituted for 2024-T4, a substitute thicker than the original must be used in either application. This seeming inconsistency, which also occurs with other combinations of aluminum alloys, is explained by the following comparison of mechanical properties.

	2024-T4 (bare)	2024-T6 (clad)
Ultimate tensile strength	62,000 psi	60,000 psi
Compressive yield strength	40,000 psi	247,000 psi

If 2024-T4 is substituted for 2024-T6, the substitute material must be thicker, unless the reduction in compressive strength is known to be acceptable. On the other hand, if 2024-T6 is substituted for 2024-T4, the substitute material must be thicker, unless the reduction in tensile strength is known to be acceptable.

(2) Rule number 2. Never substitute a material thinner than the original material or with a cross-sectional area less than the original. The buckling and torsional strengths of many sheet metal and tubular parts are dependent primarily upon the thickness, rather than the allowable compressive and shear strengths of the material. Therefore, a substitute thinner than the original will reduce the buckling and torsional strengths of a part considerably, even though the thinner substitute material has higher allowable compressive and shear strengths.

j. Material Substitution. If the repair part cannot be made from the same type of metal as the original part, select a substitute material. Table 5-15 shows the multiplication factors to determine the thickness of the repair sheets. Aluminum alloys can be used to repair certain magnesium alloys, and steel alloys can be used to repair certain aluminum, magnesium, and steel alloys.

NOTE

Substitution of material can create a corrosion hazard if the substitute material is different than the original part (as when a 7075-T6 aluminum extrusion is reinforced with a 4130 steel strap), failure to insulate the metals from direct contact with each other will permit electrolytic corrosion to attack the repaired area. Insulation of dissimilar metals is extremely important.

5-8. Magnesium Alloys. Magnesium alloys are produced and used in many shapes and forms, i e, castings, extruded bars, rods, tubing, sheets and plate and forgings. They are suitable for varied stress and non-stress aerospace applications. Their inherent strength, light weight, shock and vibration resistance are factors which make their use advantageous. The weight for an equal volume of magnesium is approximately two-thirds of that for aluminum and one-fifth of that for steel.

a. Identification. The current system used to identify magnesium alloys is two letters followed by two or three numbers. The letters designate the major alloying elements, arranged in decreasing percentage order, or in alphabetical order if the elements are of equal amounts. The numbers which follow are the respective percentages of these elements. This percentage is rounded off to the nearest whole number, or if a tolerance range is specified, the average (mean) of the range is used. A suffix letter denotes the latest revision of the alloy. For example alloy AZ92A consists of 9 percent aluminum, and 2 percent zinc as the main alloying elements. The suffix A indicates that it is the first alloy of its type. The exception to the use of a suffix letter is that X denotes control of impurity content to a lower limit. Some of the more common letters used to designate alloying elements are:

A	Aluminum	E	Rare earth
H	Thorium	K	Zirconium
M	Manganese	Z	Zinc

(1) Temper designation. The hyphenated suffix following the alloy designation denotes the condition of temper to which the alloy has been processed. These symbols are listed below.

-AC	As-Cast
-F	As-fabricated
-O	Annealed
-W	Solution heat treated - unstable temper
-T	Treated to produce stable tempers other than for -O
-T2	Annealed (cast products only)
-T3	Solution heat treated and then cold worked
-T4	Solution heat treated
-T5	Artificially aged only
-T6	Solution heat treated and then artificially aged
-T7	Solution heat treated and stabilized
-T8	Solution heat treated, cold worked and then artificially aged
-T9	Solution heat treated, artificially aged and then cold worked
-T10	Artificially aged and then cold worked
-H1	Strain hardened only
-H2	Strain hardened and partially annealed
-H3	Strain hardened and stabilized

(2) Strain-hardening. Added digits 2, 4, 6, and 8 to the H1, H2, and H3 symbols above indicate the degree of strain-hardening, as shown below.

2 =	1/4 hard
4=	1/2 hard
6 =	3/4 hard
8 =	Full hard

(3) Testing. A spot test can be used to distinguish magnesium, with no identifying markings, from aluminum.

(a) Clean unknown alloy with a file, removing all paint or other surface coating to expose base metal.

(b) Place a drop of 10 percent hydrochloric acid on the cleaned surface.

(c) If the metal surface turns black, the metal is magnesium. When no reaction occurs, metal is probably aluminum.

NOTE

Cadmium and zinc also react hydrochloric acid, but these metals are in thin coatings, and should be removed by filing performed in step (a).

b. Commonly Used Alloys. Magnesium, when alloyed with small amounts of such other metals as aluminum, manganese, zirconium, zinc, rare earth metals, and thorium yields alloys with excellent properties and high ratios of strength to weight. Proper combinations of these alloying constituents provide alloys suitable for sand, permanent mold and die castings, forgings, extrusions and rolled sheet and plate with good properties at room and elevated temperatures. Certain magnesium alloys, in cast and wrought forms can be heat treated to provide improvement in properties. Magnesium alloys have been developed for elevated temperature service.

c. Methods of Working. Magnesium is a versatile metal and can be shaped and worked by practically all methods used by the metal worker.

(1) Machining. The excellent machinability of magnesium and its alloys permits machining operations at extremely high speeds.

(2) Forming. The methods and equipment used for forming magnesium are the same types employed on other metals. However, magnesium is best formed at elevated temperatures.

(3) Joining. Magnesium can be joined by most of all the fusion and fastening methods used. These include inert gas shielded welding, metal arc welding, gas welding, electric resistance welding, riveting, bolting, screwing, and adhesive bonding.

5-9. Titanium and Titanium Alloys. Titanium, in a mineral state, is the fourth most abundant structural metal in the earth's crust. It is a light, strong, corrosion resistant, and ductile metal which lies between the aluminum alloys and stainless steels insofar as modulus, density, and strength at intermediate temperatures are concerned. At normal atmospheric temperatures, commercially pure titanium and titanium alloys have excellent corrosion resistance to sea water and marine atmospheres. Most alloys are subject to stress corrosion at elevated temperatures.

Table 5-14. Aluminum-Alloy Sheet Substitution (Sheet 1 of 3)

Old material	New or substitute material									
	1	2	3	4	5	6	7	8	9	10
	7075-T6	2024-T86C	7075-T6C	2024-T84C	7178-T6	7079-T6	7079-T6C	2024-T81C	7178-T6C	2024-T36
7075-T6		1.07	1.08	1 08	1.17	1.19	1.19	1.22	1.26	1.37
2024-T86C	1.00		1.00	1.00	1.09	1 11	1.11	1 14	1.17	1.28
7075-T6C		1.00		1.00	1.08	1 10	1.10	1.12	1.16	1.26
2024-T84C			1.00		1.08	1 10	1.10	1.12	1.16	1.26
7178-T6				1.00		1.01	1.01	1 04	1.07	1.17
7079-T6					1 00		1.00	1.02	1.06	1.15
7079-T6C						1.00		1.02	1.06	1.15
2024-T81C							1.00		1 03	1 12
7178-T6C								1 00		1.09
2024-T36									1.00	
2024-T6C										1 00
2024-T36C										
2024-T3										
2014-T6C										
2024-T4										
2024-T46C										
6061-T6										
5052-H38										
5052-H36										
5052-H34										
5052-H32										
5456-0										
5083-0										
6061-T4										
5086-0										
5454-0										
5052-0										
3003-0										
1100-H112										

Table 5-14. Aluminum-Alloy Sheet Substitution (Sheet 2 of 3)

Old material	New or substitute material									
	11	12	13	14	15	16	17	18	19	20
	2024-T6C	2024-T36C	2024-T3	2014-T6C	2024-T4	2024-T4C	6061-T6	5052-H38	5052-H36	5052-H34
7075-T6	1 43	1 46	1 51	1.53	1 68	1 81	1 92	2 10	2 40	2 92
2024-T86C	1 33	1 36	1.41	1 42	1 57	1 69	1 80	1 96	2 24	2 72
7075-T6C	1 32	1 35	1 39	1 41	1 55	1 67	1 77	1 94	2 22	2 70
2024-T84C	1 32	1 35	1 39	1.41	1 55	1 67	1 77	1 94	2.22	2 70
7178-T6	1 22	1 24	1 29	1 30	1 43	1 54	1 64	1 79	2 05	2 49
7079-T6	1 20	1 23	1 27	1 28	1 41	1.52	1 61	1 76	2 02	2 45
7079-T6C	1 20	1 23	1.27	1 28	1 41	1 52	1 61	1 76	2 02	2 45
2024-T81C	1 17	1 20	1 24	1 25	1 38	1 48	1 57	1 72	1 97	2 39
7178-T6C	1 13	1 16	1 20	1 21	1 33	1 44	1 52	1 67	1 90	2 32
2024-T36	1 04	1 06	1.10	1 12	1 20	1 32	1 40	1 53	1 75	2 13
2024-T6C		1 02	1.05	1 07	1 17	1.26	1 35	1 47	1 68	2 04
2024-T36C	1 00		1.03	1 05	1 15	1 24	1 32	1 44	1 64	2 00
2024-T3		1 00		1 01	1 11	1 20	1 27	1 39	1 59	1.93
2014-T6C			1 00		1 10	1 18	1 25	1 37	1 57	1.91
2024-T4				1 00		1 08	1 15	1 25	1 43	1.74
2024-T4C					1 00		1 06	1 16	1 32	1.61
6061-T6						1 00		1 09	1 25	1 52
5052-H38							1 00		1 14	1 39
5052-H36								1.00		1 22
5052-H34									1 00	
5052-H32										1 00
5456-0										
5083-0										
6061-T4										
5086-0										
5454-0										
5052-0										
3003-0										
1100-H112										

Table 5-14. Aluminum-Alloy Sheet Substitution (Sheet 3 of 3)

Old material	New or substitute material								
	21	22	23	24	25	26	27	28	29
	5052-H32	5456-0	5083-0	6061-T4	5086-0	5454-0	5052-0	3003-0	1100-H112
7075-T6	3 36	3.58							
2024-T86C	3 14	3 34	3.73	3.97					
7075-T6C	3 11	3 31	3.70	3.93					
2024-T84C	3 11	3 31	3.70	3.93					
7178-T6	2 87	3 06	3 42	3.63					
7079-T6	2.82	3 01	3.36	3.37					
7079-T6C	2.82	3.01	3 36	3 57					
2024-T81C	2.75	2 93	3 28	3 48	3 98				
7178-T6C	2.67	2 84	3 17	3 37	3 86				
2024-T36	2 35	2.61	2 92	3 10	3 55				
2024-T6C	2 35	2.50	2 80	2 97	3 40	3 96			
2024-T36C	2 30	2.45	2 74	2 91	3.33	3 88			
2024-T3	2 22	2.37	2 65	2.81	3.22	3 75			
2014-T6C	2 20	2.34	2 61	2 78	3.18	3 70			
2024-T4	2 00	2 13	2.38	2 53	2.89	3 37			
2024-T4C	1 86	1 98	2.21	2.35	2.68	2 68	3 95		
6061-T6	1 75	1.86	2.08	2.21	2.53	2.95	3.72		
5052-H38	1 60	1 70	1.90	2.02	2 31	2 70	3.40		
5052-H36	1.40	1 49	1.67	1.77	2 02	2 36	2.98		
5052-H34	1.15	1 23	1 37	1 45	1 66	1 94	2.45		
5052-H32		1 06	1 19	1 26	1 45	1.69	2.13		
5456-0	1.00		1 12	1.19	1 36	1.58	2.00	3.80	
5083-0		1 00		1 06	1 21	1.42	1.79	3 40	
6061-T4			1 00		1.14	1.33	1 68	3 20	
5086-0				1 00		1.17	1 47	2 80	3 99
5454-0					1 00		1 26	2.40	3.42
5052-0						1.00		1.90	2.71
3003-0							1 00		1.43
1100-H112								1.00	

NOTE

Alclad material is denoted by a capitol C.

Table 5-15. Substitute Materials

Original material	Factors to Determine Thickness of Aluminum Substitute Material										
	2014 T6			2024 T36	2024 T36[1]	2024 T81[1]	2024 T86[1]	5052 H32	5052 H34	5052 H36 H38	6061 T6	7075 T6[1]
Magnesium												
AZ31B1-H24	1 00			1.00	1 00	1 00	1 00	1.10	1 00	1 00	1.00	1 00
HK31-H24	1 00			1.00	1 00	1 00	1.00	1.26	1 15	1 00	1.00	1 00
	Factors to Determine Thickness of Steel Substitute Material											
	17-7 TH1050	301, 302, 321, 347 ANL	301, 302 1/4H	301 1/2H		301 3/4H	301 H		4130 N	4130 UTS 125		4130 UTS 150
Aluminum:												
2024-T3[1]/T4[1]	1 00	1 06	1 00	1.00		1 00	1.00		1 00	1 00		1 00
2024-T4	↑	1 06	↑	↑		↑	↑		↑	↑		↑
5052-H34		1 00										
6061-T6		1 00	1 00	1.00								
7075-T6		1 91	1 56	1.16								
7075-T6[1]		1 77	1 44	1.07								
7178-T6		2 09	1 70	1.26								
7178-T6[1]		1 91	1 56	1.16								
Magnesium.												
AZ31B1-H24		1 00	1 00	1 00		↓	↓		↓	↓		↓
HK31-H24		1 00	1 00	1.00		1 00	1 00		1 00	1 00		1.00
Steel												
17-7 TH1050		4 62	3 77	2.80		2 14	1.91		2 32	1 57		1.39
301, 302 ANL		1 00	1 00	1.00		1 00	1.00		1 07	1 00		1 00
301, 302 1/4H		1 67	1.00	1 00		↑	↑		1 78	1 29		1 14
301 1/2H	↓	2 00	1.35	1 00		↓			2 14	1 55		1 37
301 3/4H	1.00	2 34	1.77	1 31		1 00			2 50	1 80		1 60
301H	1.03	2 47	1.98	1 47		1 12			2 64	1 91		1 69
321 ANL, 347	1.00	1.00	1 00	1 00		1 00			1 00	1 00		1 00
1020, 1025	↑	1 03	1 00	1 00		1 00	↓		1 00	↑		↑
4130 N		2.00	1 63	1 21		1 00	1.00		1 00	↓		
4130 UTS 125	↓	3 23	2 63	1 95		1 49	1.33		1 62	1 00		↓
4130 UTS 150	1.00	4 29	3.37	2 50		1 91	1.11		2 07	1 28		1 00

[1] Alclad, all other aluminum alloys listed are bare sheet

a. Identification. Titanium alloys are generally designated by chemical composition. Therefore, alloy 6A1 -4V has the following composition:

Aluminum - 6 percent
Vanadium - 4 percent
Titanium - balance

Titanium alloys usually contain one or more of these elements aluminum (Al), chromium (Cr), iron (Fe), manganese (Mn), molybdenum (Mo), tin (Sn), and vanadium (V).

b. Characteristics. Titanium and its alloys are used chiefly for parts which require good resistance, moderate strength at temperatures up to 600°F (315°C), and light weight. Due to its cost, titanium is used only where outstanding advantages will be realized. Its machinability is poor. Installation of titanium parts should be accomplished using monel rivets or close-tolerance steel fasteners. If titanium is not available for a repair, the substitute material should be 4130, 4140, 4340, or 8630 steel of the same gauge.

c. Methods of Working. Titanium can be worked by grinding, drilling, sawing, and the types of working used on other metals.

(1) Grinding. Titanium and its alloys can be ground at about the same rate of speed as hardened high-speed steels. Care must be taken when grinding titanium to prevent poor surface finish and high tensile stresses. The proper wheel types should be used at low speeds, and the grinding area should be flooded with cutting fluid.

(2) Drilling. Titanium can be difficult to drill unless certain procedures are followed. High cutting temperatures can result in a rapid dulling of the drill. Holes should be as shallow as possible, short, sharp drills of approved design should be used, large amounts of cutting fluid should flood the area, and low drill speeds should be used.

(3) Sawing. Power hacksaws, band saws, and friction saws are used for sawing titanium. Water-soluble coolants are desirable. Sawed edges must be filed or belt-sanded to remove the ragged edges prior to forming.

(4) Shearing. Shearing will be successful if the blades are in perfect condition.

(5) Forming. Many forming operations are carried out at room temperature, but others are more readily done warm. The metal must be formed slowly, because the metal resists sudden movement. Stretching, hydropressing, and draw-pressing are preferable to punch-pressing and drop-hammer work. After severe cold-forming, stress-relieving is desirable.

(6) Heat-treatment of titanium alloys. Heat-treatment is not commonly used, because it has not been completely perfected and the resulting metal is difficult to use. However, titanium is heat-treated to relieve stresses set up during cold-forming or machining.

5-10. Copper and Copper Alloys. Most of the commercial coppers are refined to a minimum purity of 99.9 percent. The principal copper base alloys are brass, containing zinc, and bronze, containing tin.

a. Identification. Table 5-16 lists wrought copper and copper alloy designations, specifications, and trade names.

b. Major Alloying Elements. The following are the major alloying elements for copper.

(1) Zinc. Zinc is added to copper to form brass. It is ductile, malleable, corrosion-resistant, and has colors ranging from pink to yellow.

(2) Tin. Tin is added to copper to form bronze. Bronze is a quality spring material, and is strong, ductile, and corrosion-resistant.

(3) Lead. Lead, when added to copper, forms a machinable, highly conductive copper alloy. It is added to brass and bronze in various proportions to improve machinability and bearing properties.

(4) Aluminum. Aluminum bronzes are formed when aluminum is added to copper. They are of high strength and corrosion-resistance.

(5) Iron. Iron is added along with aluminum in some aluminum bronzes, and with manganese in some manganese bronzes.

(6) Phosphorous. Phosphorous is added mainly as a deoxidizer. In some bronzes it is added to improve spring properties.

(7) Nickel. Nickel produces higher strength without loss of ductility and excellent corrosion-resistance.

Table 5-16. Chemical Composition by Trade Name (Sheet 1 of 9)

Copper alloy number	Federal	Military	ASTM	AWS	Trade name
101	A-A-51144 QQ-C-502 QQ-C-576 QQ-W-343 WW-P-377	MIL-W-85C			Oxygen free certified copper
102	A-A-51144 QQ-C-502 QQ-B-825 QQ-C-576 QQ-R-571 QQ-W-343 WW-T-799	MIL-W-85C MIL-W-6712A			Oxygen free copper
104	QQ-C-502 QQ-C-825				Oxygen free with silver
105	QQ-C-502 QQ-C-825				Oxygen free with silver
110	QQ-A-673, type I QQ-C-502 QQ-B-825 QQ-C-576	MIL-W-3318 MIL-W-6712			Electrolyte tough pitch copper
128	QQ-C-502 QQ-C-576				Fire refined tough pitch with silver
130	QQ-C-502 QQ-C-576				Fire refined tough pitch with silver
170 172	QQ-C-530 QQ-C-533	ASTM B196 & B197			Beryllium copper
210	QQ-W-321, comp 1				Gilding, 95 percent

Table 5-16. Chemical Composition by Trade Name (Sheet 2 of 9)

Copper alloy number	Federal	Military	ASTM	AWS	Trade name
220	QQ-W-321, comp 2	MIL-W-85C MIL-W-6712			Commercial bronze, 90 percent
230	QQ-B-613, comp 4 QQ-B-626, comp 4 QQ-W-321, comp 3 WW-P-351, grade A WW-T-791, Grade 1				Red brass, 85 percent
240	QQ-A-660 QQ-B-613, comp 3 QQ-B-626, comp 3 QQ-B-650, comp D QQ-W-321, comp 4				Low brass, 80 percent
260	QQ-B-613, comp 2 & 11 QQ-B-626, comp 2 & 11 QQ-B-650, comp C QQ-W-321, comp 6	MIL-S-22499 MIL-T-6945 comp II MIL-T-20219			Cartridge brass, 70 percent
261	Same as 260				
262	QQ-B-613, comp 11 QQ-B-626, comp 11				

Table 5-16. Chemical Composition by Trade Name (Sheet 3 of 9)

Copper alloy number	Federal	Military	ASTM	AWS	Trade name
268	QQ-B-613, comp 1 & 11 QQ-B-626, comp 1 & 11				Yellow brass, 66 percent (sheet)
270	QQ-B-613, comp 11 QQ-B-626, comp 11 QQ-W-321, comp 7				Yellow brass 65 percent (rod and wire)
274	QQ-B-613, comp 11 QQ-B-626, comp 11 QQ-W-321, comp 8				Yellow brass 63 percent
280	QQ-B-613, comp 11 QQ-B-626, comp 11 WW-P-351, Grade C WW-T-791, Grade 3				Muntz metal, 60 percent
298	QQ-B-650 comp A				Brazing alloy
330	QQ-B-613, comp 11 QQ-B-626, Comp 11 WW-P-351, Grade B WW-T-791, Grade 2	MIL-T-6945 comp III			Low leaded brass
331	QQ-B-613, comp 11 QQ-B-626, comp 11				

Table 5-16. Chemical Composition by Trade Name (Sheet 4 of 9)

Copper alloy number	Federal	Military	ASTM	AWS	Trade name
110	QQ-R-571, Class FS-RW-1 QQ-W-343 WW-P-377				
111	QQ-C-502 QQ-B-825 QQ-C-576 QQ-W-343				Electrolytic touch pitch anneal resist copper
114	QQ-C-502 QQ-B-825 QQ-C-576				Tough pitch with silver
116	QQ-C-502 QQ-B-825 QQ-C-576				Tough pitch with silver
120	QQ-C-502 QQ-C-576 WW-P-377 WW-T-797 WW-T-799	MIL-W-85C			Phosphorus deoxidized low residual phosphorus copper
121	QQ-C-502 QQ-C-576				
122	QQ-C-502				Phosphorus deoxidized high residual phosphorus copper
122	QQ-C-576 WW-P-377 WW-T-797				
123	QQ-C-502 QQ-C-576				
125	QQ-C-502 QQ-C-576				Fire refined tough pitch copper
127	QQ-C-502 QQ-C-576				Fire refined tough pitch with silver

Table 5-16. Chemical Composition by Trade Name (Sheet 5 of 9)

Copper alloy number	Federal	Military	ASTM	AWS	Trade name
332	QQ-B-613, comp 11 QQ-B-626, comp 11				High leaded brass 64 1/2 percent
340	QQ-B-613, comp 11 QQ-B-626, comp 11				Medium leaded brass 64 1/2 percent
335	QQ-B-613, comp 11 QQ-B-626, comp 11				Low leaded brass
342	QQ-B-613, comp 11 & 24 QQ-B-626, comp 11 & 24				High leaded brass 64 1/2 percent
344	QQ-B-613, comp 11 QQ-B-626, comp 11				
347	QQ-B-613, comp 11 QQ-B-626, comp 11				
348	QQ-B-613, comp 11 QQ-B-626, comp 11				
350	QQ-B-613, comp 11 QQ-B-626, comp 11				Medium leaded brass 62 percent

Table 5-16. Chemical Composition by Trade Name (Sheet 6 of 9)

Copper alloy number	Federal	Military	ASTM	AWS	Trade name
353	QQ-B-613, comp 11 QQ-B-626, comp 11				Extra high leaded brass
356	QQ-B-613, comp 11 QQ-B-626, comp 11 & 22				Extra high leaded brass
370	QQ-B-613, comp 11 QQ-B-626, comp 11				Free cutting muntz metal
360	QQ-8-613, comp 11 QQ-B-626, comp 11 & 22				Free cutting brass
377	QQ-B-626, comp 21				Forging brass
443	WW-T-756				Admiralty, arsenical
444	WW-T-756				Admiralty, antimonial
445	WW-T-756				Admiralty, phosphorized
462	QQ-B-626, comp 11 QQ-B-637, comp 4				Naval brass, 63 1/2 percent
464	QQ-B-613, comp 11 QQ-B-626, comp 11 QQ-B-637, comp 1	MIL-W-6712 MIL-T-6945 comp 1			Naval brass

Table 5-16. Chemical Composition by Trade Name (Sheet 7 of 9)

Copper alloy number	Federal	Military	ASTM	AWS	Trade name
465	QQ-B-613, comp 11 QQ-B-626, comp 11 QQ-B-637, comp 1	MIL-W-6712 MIL-T-6945 comp 1			Naval brass, arsenical
466	QQ-B-613, comp 11 QQ-B-626, comp 11 QQ-B-637, comp 1	MIL-W-6712 MIL-T-6945 comp 1			Naval brass, antimonial
467	QQ-B-613, comp 11 QQ-B-626, comp 11 QQ-B-637, comp 1	MIL-W-6712 MIL-T-6945			Naval brass, phosphorized
470	QQ-R-571				Naval brass, welding and brazing rod
472	QQ-B-650, comp B				Brazing alloy
482	QQ-B-626, comp 11 QQ-B-637, comp 2	MIL-W-6712 MIL-T-6945 comp 1			Naval brass, medium leaded
485	QQ-B-626, comp 1 QQ-B-637, comp 3	MIL-W-671: MIL-T-6945 comp 1			Naval brass, high leaded
510	QQ-B-750, comp A QQ-W-321 QQ-R-571				Phosphor bronze A
518	QQ-R-571				Phosphor bronze

Table 5-16. Chemical Composition by Trade Name (Sheet 8 of 9)

Copper alloy number	Federal	Military	ASTM	AWS	Trade name
521	QQ-R-571				Phosphor bronze C
524	QQ-B-750, Comp D				Phosphor bronze D
544	QQ-B-750	MIL-B-13501			Phosphor bronze B-2
606				AWS A5 1	
612				AWS A5.1	
614				AWS A5 1	Aluminum bronze D
618		MIL-W-6712 MIL-R-18818			
622		MIL-R-18818			
651	QQ-C-591, comp B				Low silicon bronze B
655	QQ-C-591, comp A	MIL-T-8231			High silicon bronze A
656	QQ-R-571			AWS A5 6	
658				AWS A5 6	
661	QQ-C-591, comp D				
670	QQ-B-728, Class B				Manganese bronze B
675	QQ-B-728, Class A				Manganese bronze A
680	QQ-R-571				Bronze low fuming (nickel)
681	QQ-R-571				Bronze, low fuming

Table 5-16. Chemical Composition by Trade Name (Sheet 9 of 9)

Copper alloy number	Federal	Military	ASTM	AWS	Trade name
692	QQ-C-591, Comp E				Silicon brass
715	QQ-R-571				Copper nickel 30 percent
735	QQ-C-585, comp 6				
745	QQ-C-585, comp 5 QQ-C-586, comp 5 QQ-W-321				Nickel silver 65-10
752	QQ-C-585, comp 1 QQ-C-586, comp 1 QQ-W-321				Nickel silver 65-18
764	QQ-C-586, comp 3 QQ-W-321				
766	QQ-C-585, comp 7				
770 77	QQ-C-585, comp 2 QQ-C-586, comp 2 QQ-W-321				Nickel silver 55-18
794	QQ-C-586, comp 4 QQ-W-321				

(8) Silicon. Silicon is added to copper to form the copper-silicon series which has high corrosion-resistance combined with strength and superior welding qualities.

(9) Beryllium. Beryllium added to copper produces age-hardenable alloys. Beryllium-copper is widely used for tools where non-sparking qualities are desired.

(10) Manganese. Manganese is added mainly as a desulfunzing and de-gassifying element for alloys containing nickel.

5-11. Monel. Monel is a high-nickel alloy. It has high strength, particularly at high temperatures, and excellent corrosion resistance. It cannot be heat- treated, but responds to cold-working.

a. Identification. Refer to table 5-17 for designations of Monel.

b. Methods for Working and Uses. Monel is adaptable to casting and hot- or cold-working, can be successfully welded, and has properties similar to those of steel. When forged and annealed, it has a tensile strength of 80,000 pounds per square inch that can be increased by cold-working to 125,000 pounds per square inch, which ranks Monel among the tough alloys. Because of its corrosion resistance, Monel is substituted for steel where such resistance is a primary consideration. Monel has been successfully used for gears and chains, for operating retractable landing gears, and for structural parts that are subject to corrosion. In aircraft construction, Monel has been used for parts requiring both strength and high resistance to corrosion, such as exhaust manifolds and carburetor needle valves and sleeves.

5-12. Inconel. Inconel is a nickel-chromium alloy containing about 77 percent nickel, 14 percent chromium, and other elements. It has great corrosion resistance, retains its strength at high temperatures, and remains bright under exposure to a wide variety of corrosives. The ability of Inconel to resist the effects of combustion gases and to retain its strength and ductility at temperatures as high as 1600°F (871°C) make this alloy valuable for use in exhaust stacks and manifolds, collector rings, cowlings around exhaust pipes, firewalls, shrouding, and exhaust gas analyzer tubes. Since it is nonmagnetic, Inconel is also suitable for use around aircraft compasses.

a. Identification. Refer to table 5-18 for designations of Inconel.

b. Methods for Working. Inconel can only be hardened by cold-working and not by heat treatment. Machining Inconel is difficult and must be done at low speeds with carefully treated and sharpened tools. Machining generates considerable heat. Inconel bends easily. Military specifications require test pieces to withstand cold-bending, for any direction of the sheet, without cracking, through an angle of 180° on a diameter equal to the thickness of the test specimen. For shop work, it is best for the bend radii to equal one thickness of the material. Inconel welds readily, producing a strong, sound, and ductile weld that resists corrosion. Welding may be done by electric arc, electric spark, seam (resistance welding), or with an oxyacetylene flame. Welded joints in the annealed material develop the strength of the base metal. Evidence of Inconel's ductility is the fact that a welded sheet of this metal may be bent flat on itself, at right angles to the weld, or along the welded seam, without cracking the weld.

5-13. Hardness Testing of Metals. Hardness testing is used to determine the results of heat-treatment and the state of the metal prior to heat- treatment. There are several hardness testers, such as the Brinell, Rockwell, Richle, Scleroscope, Shore, and Webster (hand-type) tester. The Webster and Rockwell testers will be discussed here, as they are the most common.

a. Webster Hardness Tester. There are three models of the Webster hardness tester B, B-75, and BB-75. The hand-type tester (figure 5-10) is a simple pliers-type unit with an anvil on one jaw to support the work and an indenter on the other jaw. This instrument is used for testing aluminum and aluminum alloys. When the indenter is forced into the metal, the dial indicator can be read directly during the plier action. Care must be taken to apply the indenter jaws at right angles to the surface being tested because any deviation from a right angle rotation will give an inaccurate reading.

(1) Operating principles. All models of the Webster hardness tester operate in the same manner. The material to be tested is placed between the anvil and the penetrator. Pressure is applied to the handles until bottom is felt, at which time the dial indicator is read. Excess handle pressure beyond this point is not harmful, but it is unnecessary. The tester should be held without moving while taking the reading because any twisting or other movement during the test will result in inaccurate readings. The same principle applies to any other hardness testing machine.

Table 5-17. Identification of Monel

Industry standard	Federal specification	Condition available
	Sheet, Plate, and Strip	
ASTM B127	QQ-N-281	Sheet - hot or cold-rolled Plate - hot-rolled Strp - cold rolled
	QQ-N-286	Sheet - cold-rolled and annealed Strp - cold-rolled and annealed, cold-rolled, annealed, and age-hardened, cold-rolled, 1/2 hard, cold-rolled, 1/2-hard, and age-hardened, cold-rolled, full-hard, cold-rolled, full-hard, and age-hardened
	Bars, Forgings, and Rods	
	QQ-N-281	Bars and Rods - cold-drawn, hot-rolled
		Forgings - hot-finished, high tensile
	QQ-N-281	Bars and Rods - cold-drawn, hot-rolled
	QQ-N-286	Bars, Forgings, and Rods - hot-finished, age-hardened; hot-finished, annealed; hot-finished, annealed, and age-hardened
		Bars and Rods - cold-drawn (as drawn), cold-drawn, age-hardened, cold-drawn, annealed, cold-drawn, annealed, and age-hardened

Industry standard	Federal specification	Condition available	Condition available
	Tubing		
ASTM B165	MIL-T-1368	I. Seamless II. Welded	Annealed, hard, stress-relieved; stress-equalized

Table 5-18. Identification of Inconel (Sheet 1 of 2)

Industry standard	Federal specification	Condition available	Finish
		Sheet, Plate, and Strip	
ASTM B168 or AMS 5540		Sheet- cold-rolled and annealed	(1) Sodium hydride descaled
		Plate - hot-rolled and annealed	(2) Acid pickled
		Strip - cold-rolled and annealed, or spring temper inch and less in thickness)	(3) Controlled atmosphere annealed (0.125
			(4) Cold-Rolled (as rolled)
		Bars, Forgings, and Rods	
ASTM B166		A (cold-drawn and annealed	(1) Pickled (2) As drawn
		B (cold-drawn) C (hot-rolled) D (forgings, hot-finished) E (forgings, hot-finished and annealed) F (hot-rolled and annealed) G (forging quality, for subsequent hot manipulation)	(3) As rolled or as forged (4) As annealed
AMS 5667 AMS 5668	MIL-N-8550	A (hot-finished; rolled, forged, or extruded)	(1) Rough center-less ground
		B (forging quality, for subsequent hot manipulation)	(2) Rough-Turned (3) As hot-finished
		C (solution-treated)	

Table 5-18. Identification of Inconel (Sheet 2 of 2)

Industry standard	Federal specification	Condition available	Finish
AMS 5667 AMS 5668 - continued		D (solution-treated and high-temperature aged) E (fully heat-treated, solution-treated, high-temperature aged, and aged	
AMS 5580		I. Seamless II. Welded and drawn	Cold-Drawn, annealed, and pickled

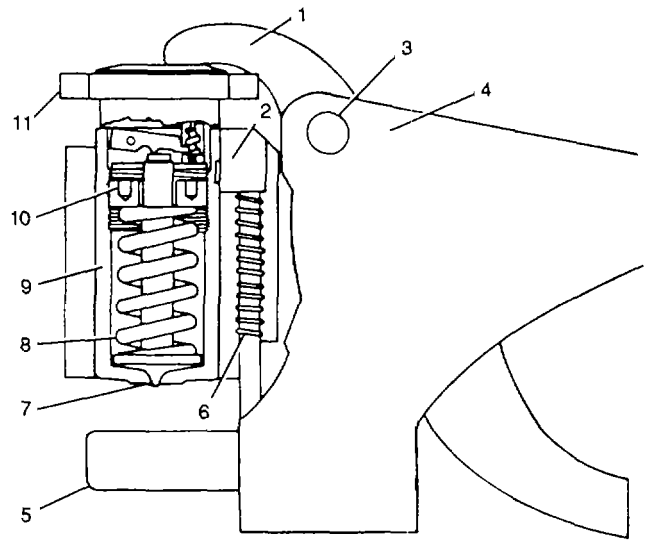

LEGEND

1 HANDLE
2 HOUSING KEY
3 PIVOT SCREW
4 FRAME
5 ANVIL
6 RETURN SPRING
7 PENETRATOR
8 LOAD SPRING
9 PENETRATOR HOUSING
10 ADJUSTING NUT
11 DIAL INDICATOR ASSEMBLY

Figure 5-10. Webster Hand-Type Tester

(2) Operation. To operate the tester, follow the instructions provided in the following paragraphs.

(a) Handle pressure. As handle pressure is applied and the penetrator assembly moves toward the work, the penetrator point makes contact first because it projects beyond the flat face of the housing. Continued handle pressure causes the penetrator to recede into the housing against the load of the load spring.

(b) Bottoming. Bottom is felt when the flat lower end or face of the housing rests against the work, at which point further pressure on the handles squeezes the metal between the housing face and the anvil and the only load on the penetrator is the load spring, which is controlled by the setting of the load spring adjusting nut.

(c) Dial indicator. The dial indicator is fitted to the upper end of the penetrator housing and actuated

by the movement of the penetrator. On metal of extreme hardness the penetrator will recede into the housing until the tip is flush with the housing face. This is the position of maximum penetrator travel and is used for zero or full-scale setting of the dial indicator. It is obtained by compressing the penetrator all the way against the bare anvil.

(d) Soft metal. On metal of extreme softness the penetrator will not recede into the housing. It will not move at all and no reading will be obtained on the dial indicator.

(3) Special instructions. The following paragraphs contain special instructions for the three models of the Webster hardness tester.

(a) Model B tester. The model B tester has a single point penetrator that can be identified in figure 5-11. The dial indicator is graduated from 1 to 20 and the hardness readings obtained can be compared to hardness readings on other testers, such as Rockwell and Brinell. As in all hardness testers, the amount of load exerted on the penetrator is solely determined by the load spring adjustment and is not affected by excess handle pressure. The handle pressure required to operate the model B tester is the least of all the three models. This tester is designed for use on aluminum and aluminum alloys, but it may also be used for other metals in the same hardness range. Each model B tester is accompanied by a standard sample stamped with the correct dial indicator reading. This sample is to be used for routine checks to ensure proper load spring adjustment. Before making such a check, the dial indicator must be in correct zero adjustment. If the reading on the dial indicator does not agree with the number stamped on the standard sample, the load spring adjustment must be changed slightly until the readings agree.

(b) Model BB-75 tester. The model BB-75 tester is a combination of the model B-75 penetrator and the model B load spring. This combination provides slightly more sensitivity on the softer materials than do the B and B-75 testers. The model BB-75 was developed to meet the need of certain industries for rapid testing of electrodeposited copper and copper in the low hardness range.

(c) Model B-75 tester. The model B-75 tester has a single-point penetrator with a different contour from the model B that can be identified from figure 5-11. The same dial indicator is used for the B and B-75 tester. Graduations are from 1 to 20. Hardness readings obtained with the model B-75 can be compared to readings from other standard hardness testers, such as Rockwell. As in all models, the amount of load on the penetrator is determined solely by the load spring adjustment and is not affected by excess pressure on the handle. The model B-75 uses a slightly heavier load spring than models B and BB-75, but requires a little more pressure on the handles to operate it. The B-75 tester is designed for use on brass and mild steel and its 20 dial graduations cover the hardness range from annealed to full hard brass. This tester is more sensitive than the model B; therefore it covers a smaller range of hardness. Each B-75 tester is accompanied by a standard sample stamped with the proper dial indicator reading. This sample is to be used for routine checks to ensure proper load spring adjustment. Before making this check, make sure the dial indicator is in correct zero adjustment. If the reading taken on the standard sample does not agree with the number stamped on it, the load spring adjustment must be changed to make the reading agree.

b. Rockwell Hardness Test. The Rockwell hardness tester is similar in principle to the Webster hardness tester, except the Rockwell tester uses a given static load and the degree of penetration is measured. The indentor/penetrator used may be either a diamond or a hardened steel ball.

(1) Principle of operation. The Rockwell machine/tester for accomplishing the hardness test applies two loads to obtain the controlled penetration and indicates results on a graduated dial (see figure 5-12). A minor load of 10 kilograms is first applied to seat the penetrator in the surface of the test specimen. The actual penetration is then produced by applying a major

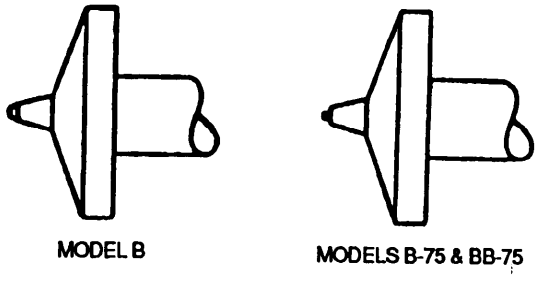

Figure 5-11. Penetrator Identification

load, subsequently, releasing and then reading hardness number from the dial. The dial reading is related to the depth of penetration, load and the penetrator used. The shallower the penetration, the higher the hardness value number for given indentor and load. The normal major load is 150 kilograms (C Scale) when using the diamond penetrator and 100 kilograms (B Scale) when using a 1/16 inch steel ball. A hardness value indicated by a number alone is incomplete. The number must be prefixed with a letter to indicate the load and indentor used to obtain the number. There is a variety of combinations of indentors and loads used to obtain a hardness value in accordance with hardness range of various material. The combinations are listed in table 5-19. When the readings fall below the hardness value C20 (B98), the material is considered too soft for the diamond cone and 1/16 inch or larger hardened ball should be used. The diamond cone must be used for all hard materials (those above 100 on the " B" scale) as the steel ball may be deformed by the test. If in doubt about the hardness of a material start with the diamond penetrator and switch to the steel ball if the material is below C20-C22.

(2) Test procedure. The procedure for making the Rockwell test is outlined as follows:

(a) Prepare the sample by removing (file, grind and polish) scale, oxide films, pits, variations and foreign material that may affect the reading. The surface should be flat, of one thickness and no bulge should be opposite the indentation.

(b) Select the proper anvil and penetrator and place proper weight on the weight pan.

(c) Check trip lever for proper location. Lever should be located in the OFF LOAD position.

(d) Place the test specimen on the anvil and by turning the hand wheel, raise it slowly (do not crash) until contact is made with the penetrator. On the older model, continue turning until pointer of the indicator has made three revolutions and is within five divisions (plus or minus) of the upright position. On the newer model, after contact, continue turning hand wheel until the small pointer is nearly vertical and slightly to right of the dot. Then watching the long pointer, raise specimen until long pointer is approximately upright-within three degrees (plus or minus) of C-O. If the zero position is overshot in either case, lower the specimen and start over. When the pointer is within three divisions of C-O, set dial to zero. After this step is complete, the minor load has been applied.

(e) Apply the major load by tripping the trip lever. Trip the lever, do not push.

(f) When the trip lever comes to rest and there is no further movement of pointer, return lever to the original position and read the hardness number indicated by the dial. When dial pointer indicates a fraction, use next lower whole number for the reading.

c. Hardness Range for Aluminum. See figure 5-13 for the hardness range for aluminum, measured on the Webster hardness tester, Model B.

d. Hardness Range for Copper. See figure 5-14 for the hardness range for copper, measured on the Webster hardness tester, Model BB-75.

e. Hardness Conversion for Brass and Mild Steel See figure 5-15 for the hardness ranges for brass and mild steel, measured on the Webster hardness tester.

f. Hardness Values for Clad Aluminum Sheet and Plate, and Bare Aluminum Sheet, Extrusions, and Forgings. Refer to tables 5-20 and 5-21, in conjunction with figure 5-16 for hardness values for aluminum (bare or clad) and aluminum alloy.

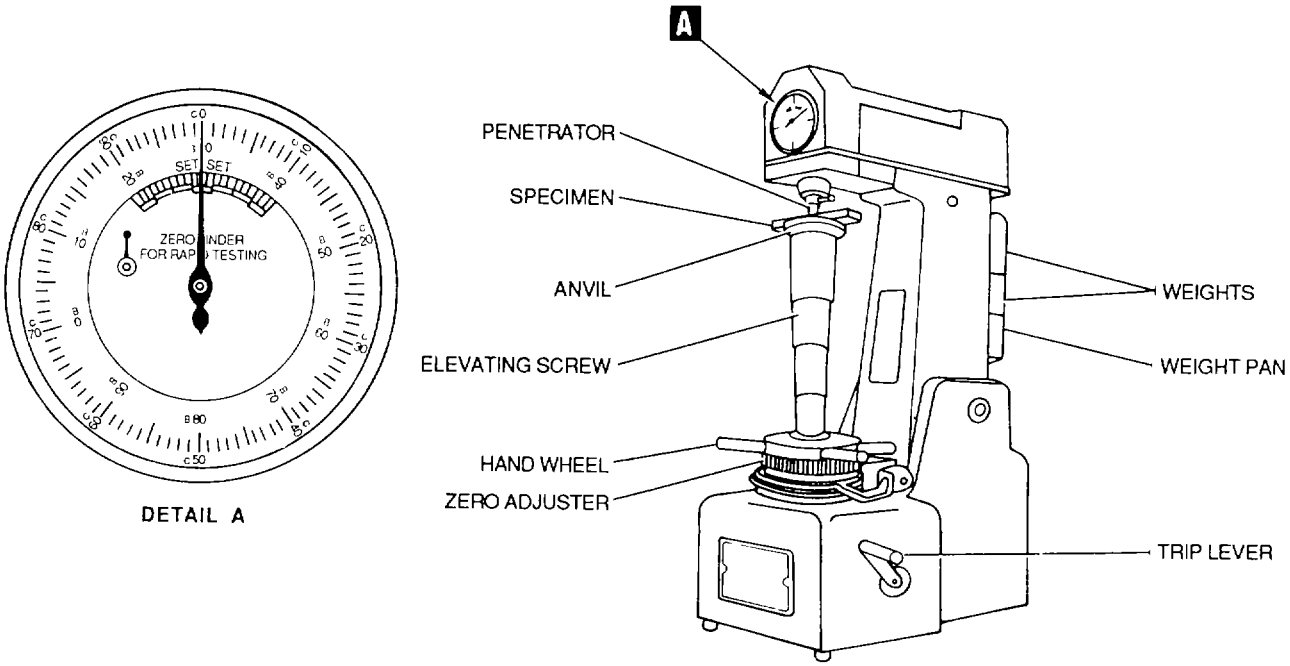

Figure 5-12. Rockwell Hardness Tester

Table 5-19. Standard Rockwell Hardness Scales

Scale symbol	Penetrator	Major load (kg.)	Dial number
A	Diamond	60	Black
B	1/16-inch ball	100	Red
C	Diamond	150	Black
D	Diamond	100	Black
E	1/8-inch ball	100	Red
F	1/16-inch ball	60	Red
G	1/16-inch ball	150	Red
H	1/8-inch ball	60	Red
K	1/8-inch ball	150	Red

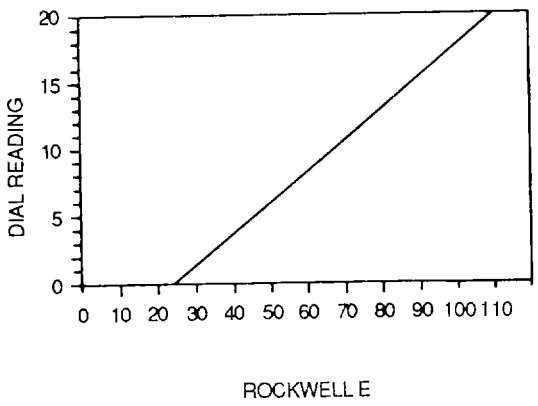

Figure 5-13. Hardness Range Aluminum , Model B

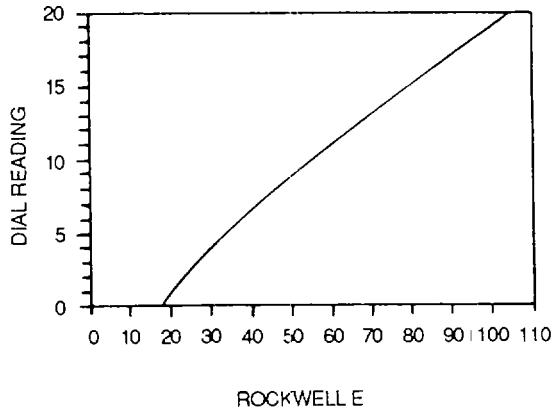

Figure 5-14. Hardness Range Copper, Model BB-75

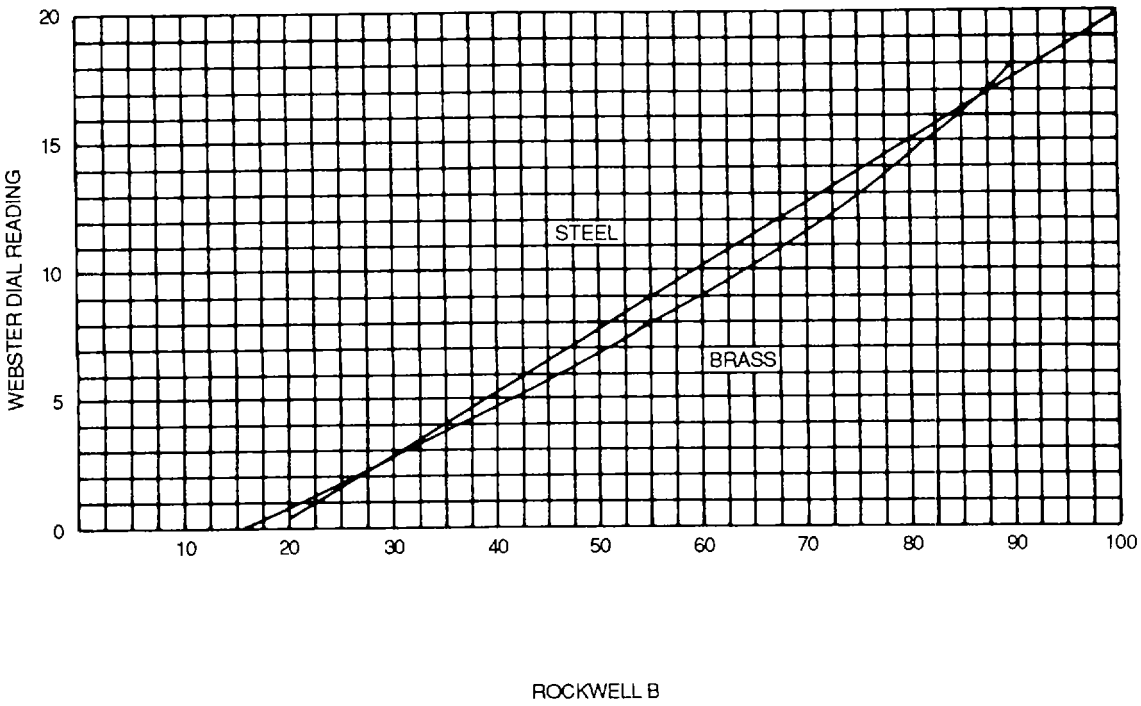

Figure 5-15. Hardness Conversion for Brass and Mild Steel

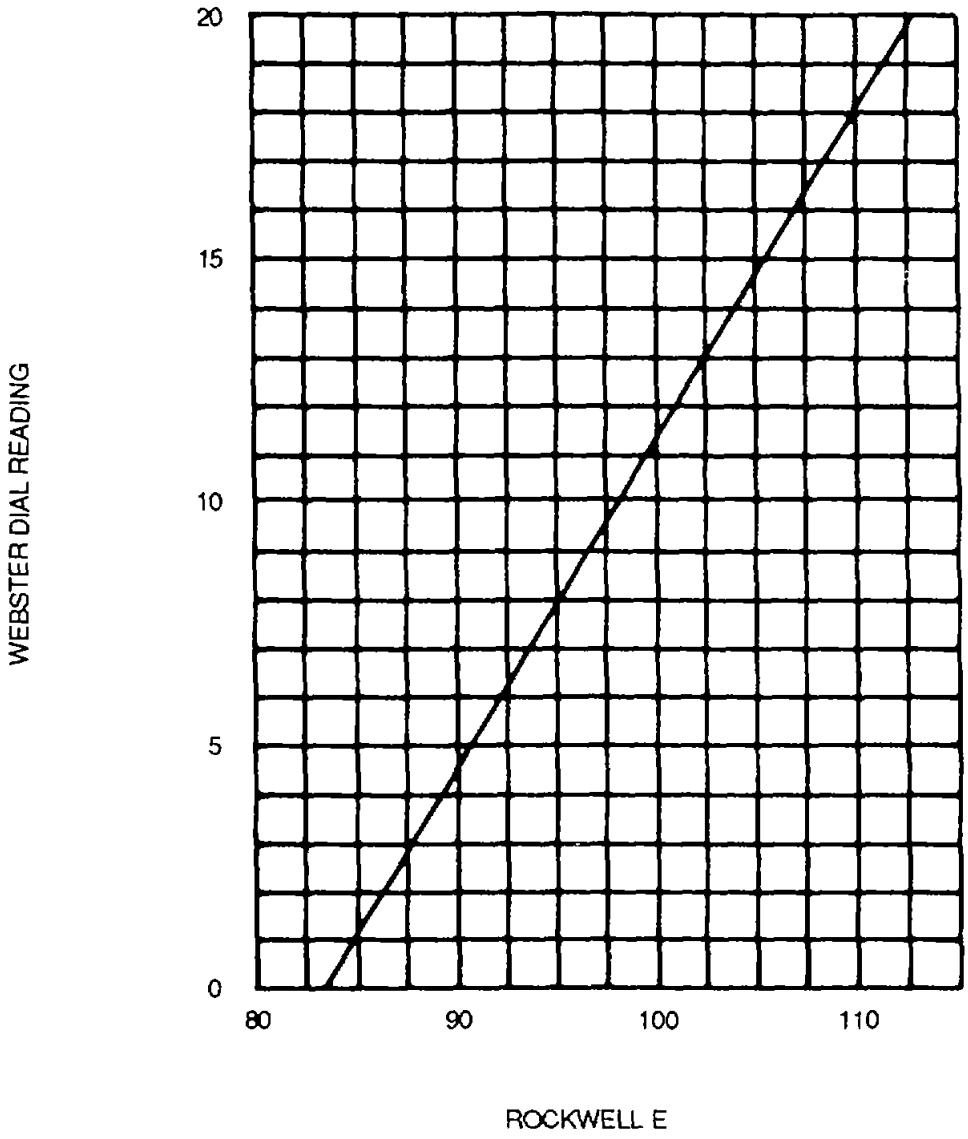

Figure 5-16. Hardness Conversion for Aluminum Alloy

Table 5-20. Rockwell Hardness Values for 0.050 Inch Minimum Thickness Clad Aluminum Sheet and Plate

Alloy	Temper	Hardness values[1] Rockwell E
2014	-0	NA[2]
	-T3,-T4	87-95
	-T42,-T45X	
	-T6,-T62,	104-110
	-T65X	
2024	-0	NA
	-T3,-T45X	91-100
		93-102
	-T4,-T42	91-100
	-T4X	93-102
	-T6,-T62	99-106
	-T65X	
	-T81,-T85X	99-106
2219	-0	NA
	-T3	NA
	-T62	93-102
	-T81,-T85X	98-105 (0.050 in-0.125 mm)
6061	-0	NA
	-T4,-T45X	NA
	-T6,-T6X	84-96
		85-97(0.125 in and under)
7075	-0	NA
	-T6,-T65X	104-110
		102-110
		102-110
7178	-0	NA
	-T6,-T65X	NA
		NA
	-T76	NA

[1] If hardness is within acceptable limits, parts are acceptable.

[2] NA means suitable acceptance values are not available.

Table 5-21. Rockwell Hardness Values for Bare Aluminum Sheet, Plate, Extrusions, and Forgings

Alloy	Temper	Hardness values[1] Rockwell E
2014	-0	NA[2]
	-T3, -T4, -T41	87-95
	-T42, -T45X	87-95
	-T6,	103-110
	-T62,-T65X	104-110
	-T61	100-109
2024	-0	NA
	-T3, -T35X	97-106
	-T4,-T42	97-106
	-T6,-T62	99-106
	-T65X	99 -106
	-T81,-T85X	99-106
2219	-0	NA
	-T3	NA
	-T6, -T81	NA
5052	-0	NA
	-H34	66 min
6061	-0	NA
	-T4, -T45X	60-75 Sheet and Plate 70-81 Extrusion and Bar
	-T6, -T6X	85-97
7075	-0	NA
	-T6,-T65X	106-114
	-T73, -T73513	103-106
	-T73,-T73513	103-114
	W	NA
7079	-0	NA
	-T6,-T65X	104-114
7178	-0	NA
	-T6,-T65X	105 min
	-T76	NA

[1] If hardness is within acceptable limits, parts are acceptable

[2] NA means suitable acceptance values are not available

[3] For all 7075-T73 or 7075-T7351 parts, determine both conductivity and Rockwell hardness.

CHAPTER 6

FORMING

6-1. General. The process of forming metal includes shaping, bending, and hand forming. The information in this chapter can be used as a general guide for these procedures. Any specific requirements set forth in specific aircraft maintenance manuals will take precedence over these instructions.

6-2. Shaping Aircraft Metals. Shaping aircraft metals usually involves the techniques of forming and chem-milling.

a. Forming. Shaping the metal materials and parts used in aircraft construction, either with hand or power tools, is called forming. Great care must be taken while forming these metals since crude and careless workmanship can result in the destruction of the material. A missed or incorrectly performed step in a procedure can also result in an inwardly defective part, as it can remain in a strained condition. This can hasten fatigue or sudden failure.

(1) Forming aluminum. Most aluminum parts can be formed without annealing the metal but if extensive forming operations such as large folds or complex curves are planned, the metal should be in the annealed condition. While forming some complex parts, the operation may have to be interrupted and the metal annealed, as bending or other forming methods strain-harden the metal. Use a hammer or mallet sparingly, as this also results in strain-hardening.

(2) Forming stainless steel. Stainless steel can be formed by any of the usual methods, but it requires considerably more skill to form than aluminum or aluminum alloys. Stainless steel requires frequent annealing during the forming process because it work-hardens very fast.

(a) Drilling stainless steel. When drilling stainless steel, use a high-speed drill bit ground to an included angle of 140 degrees, as shown in figure 6-1.

1 Drill speed. The speed of 750 rpm should never be exceeded, and a uniform pressure should be kept on the drill at all times.

2 Drill cooling. The drill bit should be dipped in water after each hole is drilled to prevent overheating. When it is necessary to drill several deep holes, use a liquid coolant. A compound consisting of 1 pound of sulfur added to 1 gallon of lard oil will serve this purpose. This coolant should be applied immediately upon starting the drill. High-speed portable drills should not be used, as they have a tendency to burn the drill points and excessively work-harden the point of contact. A drill press adjustable to a speed of 750 rpm is recommended.

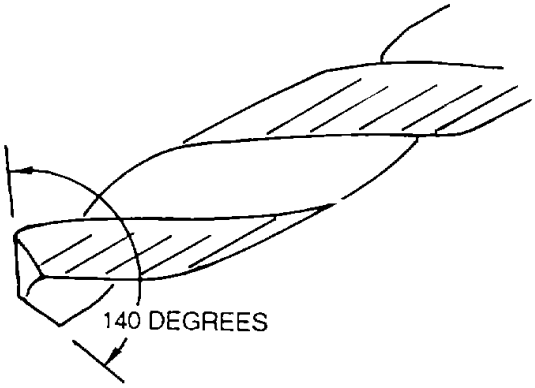

Figure 6-1. Drill Angle for Stainless Steel

(3) Forming magnesium and titanium. Magnesium and titanium can be worked by the following methods.

(a) Magnesium. Though magnesium alloys can be worked by most of the same techniques as for other metals, many details of shop practice for other metals cannot be applied to magnesium. These alloys are difficult to fabricate at room temperature, so most operations are performed at high temperatures. This involves heating of the metal or the equipment, or both.

1 Sheet. Magnesium alloy sheets may be cut by blade shears, blanking dies, routers, or saws. Hand or circular saws are commonly used to cut extrusions to length. Conventional shears and nibblers should not be used because they produce a rough, cracked edge. Shearing and blanking require close tool tolerances. A maximum clearance of 3 to 5 percent of the sheet thickness is recommended. Cold shearing should not be done on hard-rolled sheet thicker than 0.064 inch or on annealed sheet thicker than 1/8 inch. Shaving is performed to improve the usual rough, flaky

edge of sheet that has been sheared. This consists of removing about 1/32 inch by a second shearing.

2 Plate stock. Sawing is the only method used to cut magnesium plate stock more than 1/2 inch thick. A band saw is recommended for cutting plate stock, sheet stock, or heavy extrusions. Medium and small extrusions are more easily cut on a circular cutoff saw. Band saws should be equipped with non-sparking blade guides to eliminate the danger of sparks igniting the filings.

3 Bend radii. Most magnesium alloys are not often cold-worked at room temperature because they work-harden very fast and are not suited to any severe cold-forming. Some simple bending operations may be performed on magnesium sheet material, but the radius of bend must be at least seven times the thickness of the sheet for soft material and 12 times its thickness for hard material. A radius of two or three times the thickness of the sheet may be used if the material is heated for the forming operation.

4 Hot-working. Wrought magnesium alloys tend to crack after they are cold-worked, therefore, the best results are obtained by heating the metal to 450°F (232°°C) before any forming operations are attempted. Parts formed at the lower temperature range are stronger because the higher temperature range has an annealing effect on the metal. Hot-working has some disadvantages. Heating the dies and the metal is costly and difficult and magnesium is easily burned. Also, overheating causes small molten pools to form within the metal. In both cases, the metal is ruined. To prevent magnesium from burning, it must be protected with a sulfur dioxide atmosphere while being heated. Magnesium will ignite when heated to a temperature near its boiling point when oxygen is present. There are also problems in lubricating and handling materials at these high temperatures. However, there are some advantages to hot-working magnesium. It is more easily formed when hot than other metals and springback is reduced, resulting in greater dimensional accuracy.

5 Machining. Magnesium alloys have excellent machining characteristics, making it possible to use machine tools at maximum speeds, with heavy cuts and high feed rates. Power requirements for machining magnesium alloys are about one-sixth those for mild steel.

(b) Titanium. Titanium is formed commercially by means of brakes, stretch formers, hydro-presses, drop hammers, and the like, and it can be deep-drawn, cupped, beaded, dimpled, or punched. Heating the titanium sheet to 932°F (500°C) enables difficult forming operations to be done more easily and reduces springbok. To relieve stress, heat titanium for 1 hour at 1382°F (750°°C) and cool it uniformly.

b. Chem-Milling. Shaping metal by exposure to an etching chemical is called chem-milling. In this process, the manufacturer applies an acid to metal to lighten and create specially designed parts. Through rather complicated processes, structural members can be produced that would be otherwise impractical to make.

6-3. Bending Sheet Metal. When making bends, the thickness, alloy composition, and temper conditions of the material must be considered. Thinner pieces of aluminum alloy that are very malleable can be given a radical bend. With thicker sheets, careful consideration must be given to the type of bend required. The following general guidelines should be observed when bending sheet metal.

- Maintain a work area free of dirt, chips, grit, and other foreign material.
- Provide clean, smooth, rust-free forming equipment.
- Sheared or cut edges shall be sanded and filed or polished prior to bending.
- Form material across the direction of grain flow when possible.

It is the accepted practice in aircraft repair to form flanges or bends with a radius that will leave the formed shape of the material as strong as the original shape. Sheet metal that has been formed to a sharp angle is not as strong as it is when shaped using a large radius. The sharply bent piece will have the stresses concentrated at the bend. Even though most aircraft sheet metals are malleable, they will crack if bent too sharply. All aircraft metals cannot be bent to the same radius. The minimum radius depends on both the temper and the thickness of the metal. The radius of the bend is usually proportional to the thickness of the material. The type of material is also important. If it is soft, it can be bent very sharply. If it is hard, the radius of bend and the bend allowance will have to be greater. The degree of bend will affect the overall length of the metal, while its thickness affects the radius of bend. When bending metal to exact dimensions, the length of the neutral line must be determined so that enough material can be allowed for the bend. The following paragraphs will discuss these terms and the methods for producing quality bends in sheet metal.

a. *Radius of Bend*. The radius of bend is the measurement on the inside of the curved portion of the bend.

b. *Bend Allowance*. As figure 6-2 shows, bending a sheet compresses the material on the inside of the curve, and stretches the material on the outside. However, at some distance between these two extremes lies a space which is not affected by either force. This is known as the neutral axis or line and is approximately 0 445 times the metal thickness (0.445 x T) from the inside of the bend. The length of this neutral axis must be determined so that sufficient material can be provided for the bend. This is called the bend allowance. This amount must be added to the overall length of the layout pattern to ensure adequate material for the bend. Bend allowance can be determined by the use of either of two formulas, or a chart.

(1) Formula No 1. To the radius of bend (R) add 1/2 the thickness of the metal (1/2 T). This gives R+1/2T, or the radius of the circle of the neutral axis. See figure 6-3 for an illustration. Compute the circumference of this circle by multiplying the radius of the neutral line (R+1/2T) by 2π (Note. $\pi = 3.1416$):

$$2\pi\,(R+1/2T)$$

Since a 90-degree bend is a quarter of the circle, divide the circumference by 4. This gives:

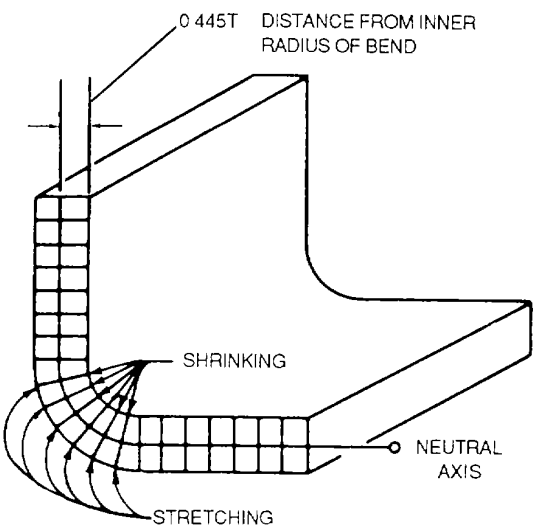

Figure 6-2. Neutral Axis and Stresses Resulting from Bending

$$\frac{2\pi\,(R+1/2T)}{4}$$

This, therefore, is the bend allowance for a 90-degree bend. To use the formula for a 90-degree bend having a radius of 1/4 inch for material 0 051 inch thick, substitute in the formula as follows.

$$\text{Bend allowance} = \frac{2 \times 3.1416\,(0.250 + 1/2 \times 0.051)}{4}$$

$$= \frac{6.2832(0.250 + 0.0255)}{4}$$

$$= \frac{6.2832\,(0.2755)}{4}$$

$$= 0.4327$$

Thus bend allowance, or the length of material required for the bend, is 0.4327, or 7/16 inch.

NOTE

This formula is slightly in error because the neutral axis is not exactly in the center of the material. However, the amount of error incurred is so slight that, for most work, the formula is satisfactory.

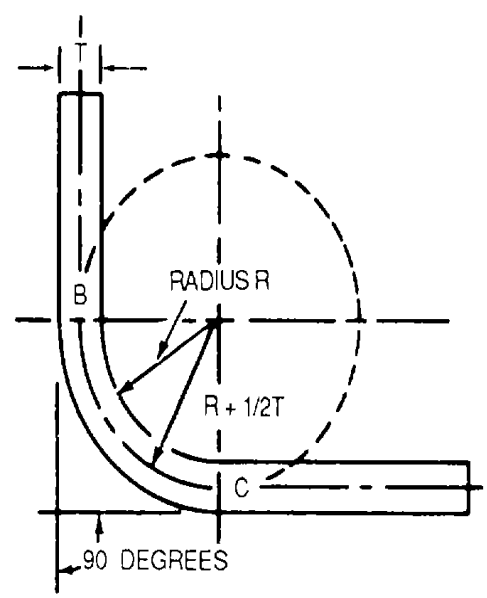

Figure 6-3. Bend Allowance, 90-Degree Bend

(2) Formula No 2. By experimentation with actual bends in metals over a period of years, aircraft engineers have found that two constant values exist which are the relationship between the degrees in the bend and the thickness of the metal. This formula can be used for any degree of bend between 1 and 180 degrees. This formula is:

Bend allowance = (0.01743R + 0.0078T) N

where:

R = The desired bend radius

T = The thickness of the metal

N = Number of degrees of bend

To use this formula for a 90-degree bend having a radius of 1/4 inch for material 0.051 inch thick, substitute in the formula as follows:

Bend allowance = (0 01743 x 0.250) + (0 0078 x 0 051) x 90

= (0 043575 + 0.0003978) x 90

= (0 0047553) x 90

= 0 427977 or 0 428

Thus, the bend allowance is 0 428, or 7/16 inch.

(3) Bend allowance table. In table 6-1, the radius of bend in a decimal and fraction is shown on the top line, and the metal thickness is shown on the left-hand column. The bend allowances for a 1 degree angle are shown. To determine the bend allowance for any specific angle, multiply the bend allowance shown by the number of degrees in the angle required. Thus, if a sheet 0.051 inch thick is to be bent to a 120-degree angle with a bend radius of 1/4 inch, the bend allowance of 0.004756, as shown, must be multiplied by 120. Therefore, the bend allowance for a 120-degree bend will be 120 x 0.004756, or 0.570 inch.

c. Setback. When folding or bending metal, it is often necessary to know the exact start and end points of the fold or bend. To accurately locate these points, both the bend allowance and the length of the flat portions must be determined. To determine the length of the flats, the setback must be found and then subtracted from the base measurement. Two factors are important in determining setback the radius of bend and thickness of the sheet metal, or R and T. Figure 6-4 shows that the setback equals the distance from the bend tangent line to the mold point and that it is the same for the vertical flat and the horizontal flat.

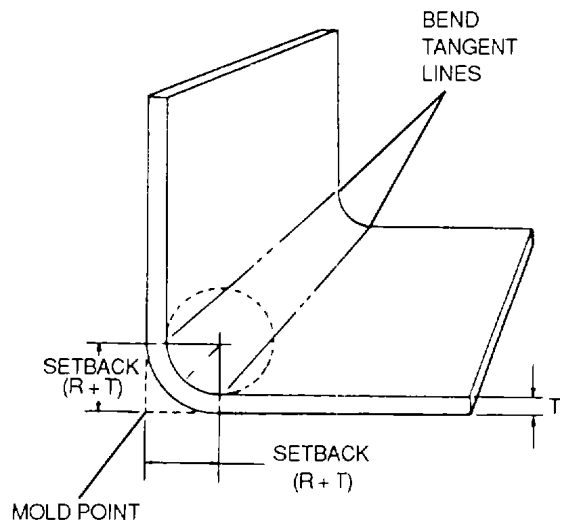

Figure 6-4. Setback

(1) Setback formula. Setback for all 90-degree bends can be calculated from the formula:

Setback = R + T

For example, for a piece of 0.03 inch thick material that is to be bent to a radius of 1/8 (0.125) inch, setback equals 0.125 + 0 032, which is 0.157 inch. When setback is subtracted from the base measurement, the remainder will be the length of the flat

(2) K-chart. To calculate setback for all bends other than 90 degrees, a setback K-chart (table 6-2) must be consulted to find a value called K that must be substituted in the formula.

SB = K (R + T)

Table 6-1. Bend Allowance Table

R	1/32	1/16	3/32	1/8	5/32	3/16	7/32
T	**0.031**	**0.063**	**0.096**	**0.125**	**0.156**	**0.188**	**0.219**
0.020	0.000693	0.001251	0.001792	0.002333	0.002874	0.003433	0.003974
0.025	0.000736	0.001294	0.001835	0.002376	0.002917	0.003476	0.004017
0.028	0.000759	0.001318	0.001859	0.002400	0.002941	0.003499	0.004040
0.032	0.000787	0.001345	0.001886	0.002427	0.002968	0.003526	0.004067
0.038	0.000837	0.001396	0.001937	0.002478	0.003019	0.003577	0.004118
0.040	0.000853	0.001411	0.001952	0.002493	0.003034	0.003593	0.004134
0.051		0.001413	0.002034	0.002575	0.003116	0.003675	0.004215
0.064		0.001595	0.002136	0.002676	0.003218	0.003776	0.004317
0.072			0.002202	0.002743	0.003284	0.003842	0.004283
0.078			0.002249	0.002790	0.003331	0.003889	0.004430
0.081			0.002272	0.002813	0.003354	0.003912	0.004453
0.091			0.002350	0.002891	0.003432	0.003990	0.004531
0.094			0.002374	0.002914	0.003455	0.004014	0.004555
0.102				0.002977	0.003418	0.004076	0.004617
0.109				0.003031	0.003572	0.004131	0.004672
0.125				0.003156	0.003697	0.004256	0.004797
0.156					0.003939	0.004497	0.005038
0.188						0.004747	0.005288
0.250							

Table 6-1. Bend Allowance Table - CONT

R	1/4	9/32	5/16	11/32	3/8	7/16	1/2
T	**0.250**	**0.281**	**0.313**	**0.344**	**0.375**	**0.438**	**0.500**
0.020	0.004515	0.005056	0.005614	0.006155	0.006695	0.007795	0.008877
0.025	0.004558	0.005098	0.005657	0.006198	0.006739	0.007838	0.008920
0.028	0.004581	0.005122	0.005680	0.006221	0.006762	0.007862	0.008944
0.032	0.004608	0.005149	0.005708	0.006249	0.006789	0.007889	0.008971
0.038	0.004659	0.005200	0.005758	0.006299	0.006840	0.007940	0.009021
0.040	0.004675	0.005215	0.005774	0.006315	0.006856	0.007955	0.009037
0.051	0.004756	0.005297	0.005855	0.006397	0.006934	0.008037	0.009119
0.064	0.004858	0.005399	0.005957	0.006498	0.007039	0.008138	0.009220
0.072	0.004924	0.005465	0.006023	0.006564	0.007105	0.008205	0.009287
0.078	0.004963	0.005512	0.006070	0.006611	0.007152	0.008252	0.009333
0.081	0.004969	0.005535	0.006094	0.006635	0.007176	0.008275	0.009357
0.091	0.005072	0.005613	0.006172	0.006713	0.007256	0.008353	0.009435
0.094	0.005096	0.005637	0.006195	0.006736	0.007277	0.008376	0.009458
0.102	0.005158	0.005699	0.006257	0.006798	0.007339	0.008439	0.009521
0.109	0.005213	0.005754	0.006312	0.006853	0.007386	0.008493	0.009575
0.125	0.005338	0.005878	0.006437	0.006978	0.007519	0.008618	0.009700
0.156	0.005579	0.006120	0.006679	0.007220	0.007761	0.008660	0.009942
0.188	0.005829	0.006370	0.006928	0.007469	0.008010	0.009109	0.010191
0.250	0.006313	0.006853	0.007412	0.007953	0.008494	0.009593	0.010675

Table 6-2. Setback - K - Chart

Angie (degrees)	K-Value	Angie (degrees)	K-Value
1	0.00873	45	0.41421
2	0.01745	46	0.42447
3	0.02618	47	0.43481
4	0.03492	48	0.44523
5	0.04366	49	0.45573
6	0.05241	50	0.46631
7	0.06116		
8	0.06993	51	0.47697
9	0.07870	52	0.48773
10	0.08749	53	0.49858
		54	0.50952
11	0.09629	55	0.52057
12	0.10510	56	0.53171
13	0.11393	57	0.54295
14	0.12278	58	0.55431
15	0.13165	59	0.56577
16	0.14054	60	0.57735
17	0.14945		
18	0.15838	61	0.58904
19	0.16734	62	0.60086
20	0.17633	63	0.61280
		64	0.62487
21	0.18534	65	0.63707
22	0.19438	66	0.64941
23	0.20345	67	0.66188
24	0.21256	68	0.67451
25	0.22169	69	0.68728
26	0.23087	70	0.70021
27	0.24008		
28	0.24933	71	0.71329
29	0.25862	72	0.72654
30	0.26795	73	0.73996
		74	0.75355
31	0.27732	75	0.76733
32	0.28674	76	0.78128
33	0.29621	77	0.79543
34	0.30573	78	0.80978
35	0.31530	79	0.82434
36	0.32492	80	0.83910
37	0.33459		
38	0.34433	81	0.85408
39	0.35412	82	0.86929
40	0.36397	83	0.88472
		84	0.90040
41	0.37388	85	0.91633
42	0.38386	86	0.93251
43	0.39391	87	0.94896
44	0.40403	88	0.96569

Table 6-2. Setback - K - Chart - CONT

Angie (degrees)	K-Value	Angie (degrees)	K-Value
89	0.98270	131	2.1943
90	1.0000	132	2.2460
		133	2.2998
91	1.0176	134	2.3558
92	1.0355	135	2.4142
93	1.0538	136	2.4751
94	1.0724	137	2.5386
95	1.0913	138	2.6051
96	1.1106	139	2.6746
97	1.1303	140	2.7475
98	1.1504		
99	1.1708	141	2.8239
100	1.1917	142	2.9042
		143	2.9887
101	1.2131	144	3.0777
102	1.2349	145	3.1716
103	1.2572	146	3.2708
104	1.2799	147	3.3759
105	1.3032	148	3.4874
106	1.3270	149	3.6059
107	1.3514	150	3.7320
108	1.3764		
109	1.4019	151	3.8667
110	1.4281	152	4.0108
		153	4.1653
111	1.4550	154	4.3315
112	1.4826	155	4.5107
113	1.5108	156	4.7056
114	1.5399	157	4.9151
115	1.5697	158	5.1455
116	1.6003	159	5.3995
117	1.6318	160	5.6713
118	1.6643		
119	1.6977	161	5.9758
120	1.7320	162	6.3137
		163	6.6911
121	1.7675	164	7.1154
122	1.8040	165	7.5957
123	1.8418	166	8.1443
124	1.8807	167	8.7769
125	1.9210	168	9.5144
126	1.9626	169	10.3850
127	2.0057	170	11.4300
128	2.0503		
129	2.0965		
130	2.1445		

Table 6-2. Setback - K - Chart - CONT

Angle (degrees)	K-Value	Angle (degrees)	K-Value
171	12.7060	176	26.6360
172	14.3010	177	38.1380
173	16.3500	178	57.2900
174	19.0810	179	114.5900
175	22.9040	180	Infinite

d. *Brake or Sight Line*. The brake or sight line is the mark on a flat sheet which is set even with the nose of the radius bar of the cornice brake and serves as a guide in bending. The brake line can be located by measuring out one radius from the bend tangent line closest to the end which is to be inserted under the nose of the brake or against the radius form block. The nose of the brake or radius bar should fall directly over the brake or sight line as shown in figure 6-5.

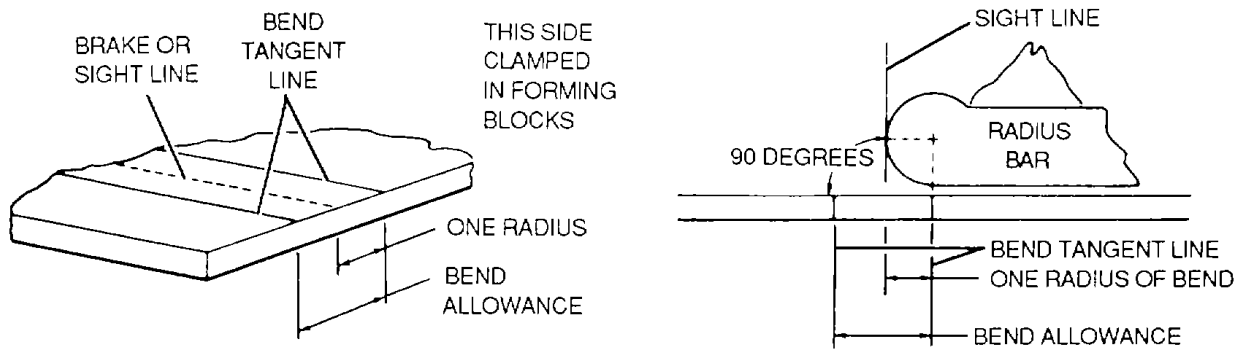

Figure 6-5. Brake or Sight Line

e. *Flat Pattern Layout*. It is wise to make a layout pattern of the part before forming it to prevent any waste of material and to get a greater degree of accuracy in the finished part. Where straight angle bends are concerned, correct allowances must be made for setback and bend allowance. If the shrinking or stretching processes are to be used, allowances must be made so that the part can be turned out with a minimum amount of forming Figure 6-6 shows a sample channel that must be formed. As can be seen, the left flange (A) must be 1 inch high, the web (B) is 2 inches long, and the right flange (C) is 1.1/4 inch high. The material is 0.051 inch thick and the radius of bend is 3/16 inch. The angle of bend is 90 degrees.

(1) Layout of first flange (A). First, determine the setback to establish the distance of the flats. The setback for the first bend is R + T, or 0.188 + 0.051 = 0.239 inch. The first flange is equal to the overall dimension minus the setback, or 1.000 - 0.239 = 0.761 inch. Then, find the bend allowance from table 6-1 for the first bend (BA = 0.331 inch). Convert 0.761 to 49/64 and 0.331 to 21/64. Now, lay out these measurements (figure 6-7) to determine where each bend begins and ends.

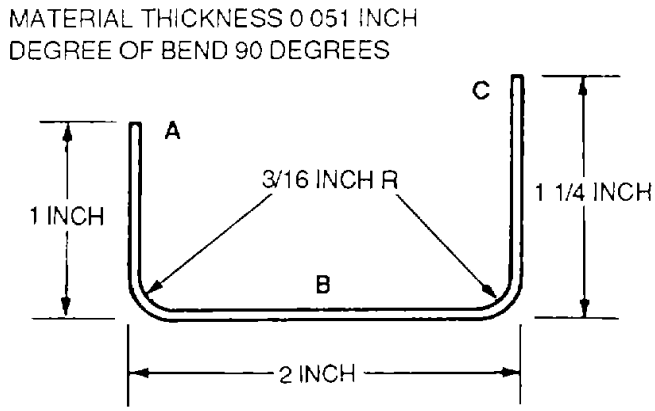

Figure 6-6. Sample Channel

(2) Layout of web (B). Next, lay out the web, which is equal to the overall dimension minus the setback at each end, or 2.000 - (0.239 + 0.239) = 1.522 inch. The bend allowance for the second bend is the same as for the first bend (0.331 inch). Convert 1.522 to 1.33/64 and 0.331 to 21/64. Mark off this distance (figure 6-8).

(3) Layout of third flange (C). This flange is equal to the overall dimension minus the setback, or 1.250 - 0.239 = 1.011 inch. Convert 1.011 to 11/64. Lay out this measurement (figure 6-9).

f. Locating Brake or Sight Line. This line is located by measuring one bend radius from the bend tangent line that will be placed under the brake jaws or between the forming blocks. For small parts, this is usually the flange that is clamped in the brake. For J stringers and larger parts, it is the web that will be clamped in the brake or forming blocks. The layout produced in the previous paragraph is shown in figure 6-10. To find the brake or sight line for flange (A), add the dimensions of the flange and the bend radius. The sum will be the dimension from the edge of the metal to the bend sight line (49/64 + 12/64 = 61/64).

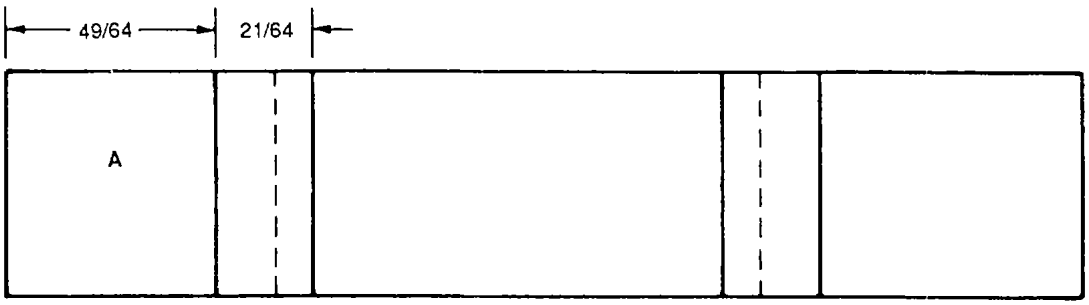

Figure 6-7. Layout of First Flange

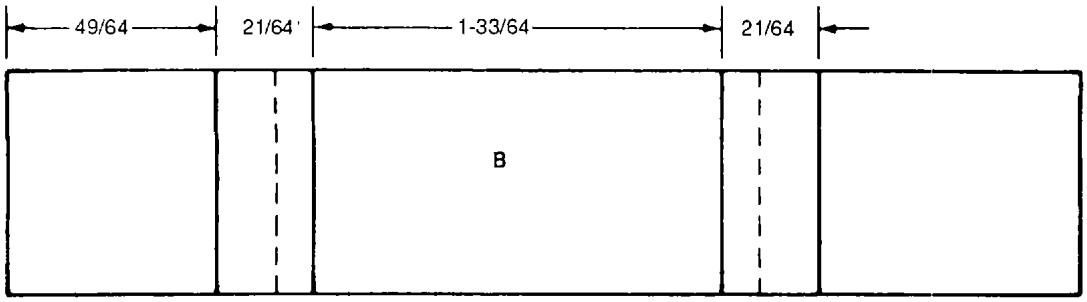

Figure 6-8. Layout of Web

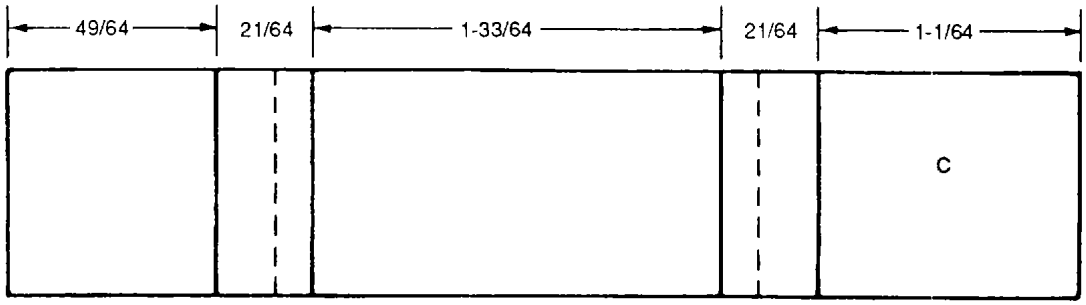

Figure 6-9. Layout of third flange

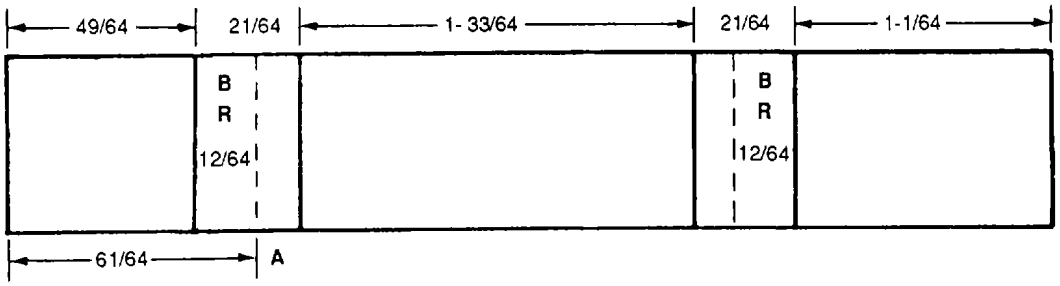

Figure 6-10. Locating Brake or Sight Line of Flange

(1) Marking line. Mark the brake line on the metal using a soft pencil or suitable marker.

(2) Making bend. Figure 6-11 shows the sheet metal in the brake with the brake line in proper position. The radius of the part over which the metal is to be bent must be the same as the radius required. Various mandrels or dies can be used to perform this work. Accurate results can be obtained for the cornice brake by using mandrels or dies (sometimes called radius bars), which may be attached to the lower side of the brake clamping jaw if radius bars are not available, pieces of sheet aluminum should be formed to the radius desired and clamped over the brake jaw. Regardless of the method of bending used, the metal must be held so that the bend begins at the bend tangent line.

g. Duplicating Patterns. Sometimes the aircraft structural repairman will have to duplicate parts without the aid of blueprints. This will require taking measurements directly from the original or a duplicate part. Most parts that can be manufactured in a field environment have straight line bends with some radiused flanges, from which it is fairly simple to take measurements. FM 5-553 contains the best instructions for drawing flat layouts of these parts.

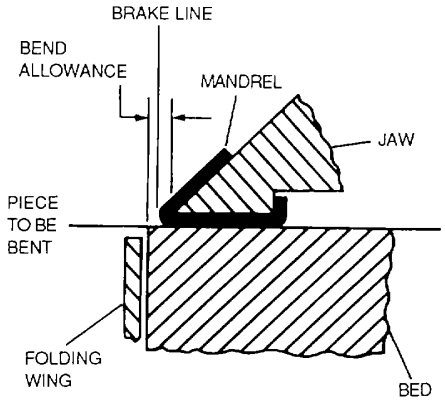

Figure 6-11. Locating Brake Line in the Brake

6-4. Forming Operations. The methods used in forming operations include bumping, crimping, stretching, shrinking, and folding.

a. Bumping. Shaping or forming metal by hammering or pounding is called bumping. During this process, the metal is supported by a dolly, a sandbag, or a die. Each contains a depression into which the hammered portion of the metal can sink. Bumping can be done by hand or by machine.

b. Crimping. Folding, pleating, or corrugating a piece of sheet metal in a way that shortens it is called crimping. Crimping is often used to make one end of a pipe smaller so that It may fit Inside the end of another identical pipe. As seen in figure 6-12, crimping one side of an angle with crimping pliers will cause it to curve.

c. Stretching. Hammering a flat piece of metal in one location as shown in figure 6-13 will cause the material In that area to become thinner. However, since the amount of material has not changed, it covers a greater area because the metal has been stretched. As figure 6-13 illustrates, the vertical face of the angle has not changed, so the piece will bend as a result of the stretching on the horizontal face.

d. Shrinking. During the shrinking process material is forced or compressed into a smaller area. This process is used when the length of a piece of metal, especially on the inside of a bend, is to be reduced. Sheet metal can be shrunk in two ways- by hammering on a V-block, or by crimping and then using a V-block.

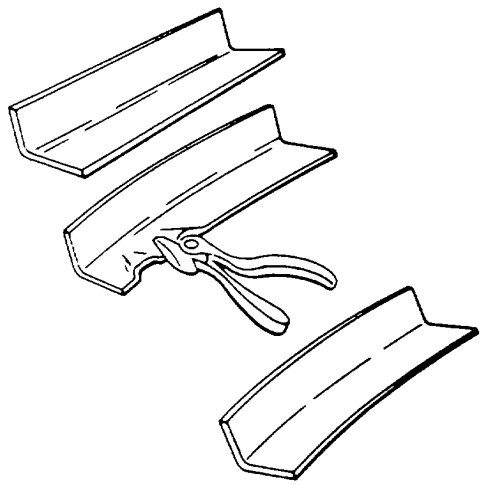

Figure 6-12. Crimping

(1) V-block. To curve a formed angle on a V-block, place it on the V-block and gently hammer on the upper edge directly above the V. This is shown in figure 6-14. While hammering, move the angle back and forth across the V-block to compress the material along the upper edge. Compression of the material along the upper edge of the vertical flange will cause the formed angle to curve.

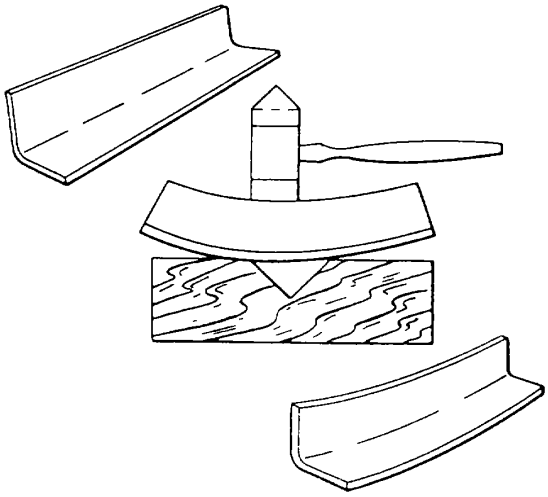

Figure 6-14. Shrinking

(2) Crimping. To make a sharp curve or a sharply bent flanged angle, crimping and the V-block

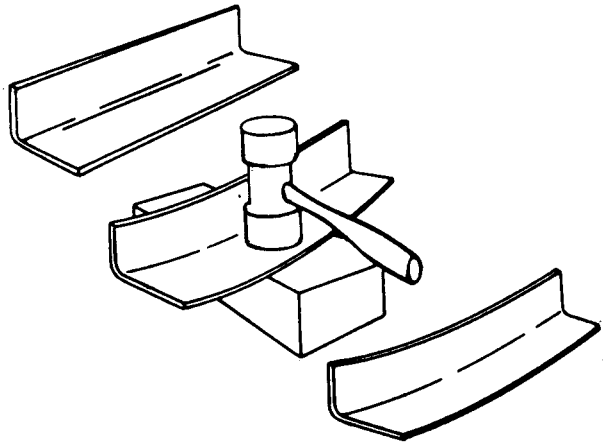

Figure 6-13. Stretching

can be used in this process, crimps are placed in one flange, and then by hammering the metal on the V-block, the crimps will be driven out one at a time.

e. Folding. Making bends in sheets or plates is called folding. Folds are usually thought of as sharp, angular bends, and they are generally made on folding machines.

6-5. Hand Forming Procedures. All forming revolves around the process of shrinking and stretching Large metal-working machines are normally used to simplify these processes. However, in their absence, metal can still be worked by hand. The following paragraphs discuss some of these techniques.

a. Straight Line Bends. Hand-formed folds and bends can be made in the following manner using wooden or metal bending blocks.

(1) Layout. The material should be laid out as required and the blank piece cut out. Clamp the material rigidly along the bend line between two wooden forming blocks by placing and holding it in a vise. The wooden forming block should have one edge rounded as needed for the desired radius of bend. It should also be curved slightly beyond the 90-degree point to allow for springback.

(2) Work. With the metal sheet held firmly in the vise by the forming blocks, use a rubber, plastic, or rawhide mallet and lightly tap the sheet. This will cause

the metal to begin protruding beyond the forming blocks to the desired angle. Start tapping at one end and work back and forth along the edge, thus gradually and evenly making the bend. Continue doing this until the protruding metal is forced down to the desired angle against the forming block. Allow for springback by driving the material slightly farther than the actual bend. If a large amount of metal extends beyond the forming blocks, maintain hand pressure against the protruding sheet to prevent it from bouncing. Remove any irregularities by holding a straight block of hardwood edgewise against the bend and striking it with heavy blows of a mallet or hammer. If only a small amount of metal protrudes beyond the forming block, use the hardwood block and hammer to make the entire bend.

b. Curving Formed or Extruded Angles. Both formed and extruded types of angles can be curved (not bent sharply) by stretching or shrinking either of the flanges. Curving by stretching the one flange is usually preferred since the process requires only a V- block and a mallet and is easily accomplished.

(1) Stretching. In the stretching process, shown in figure 6-13, place the flange to be stretched in the groove of the V-block. Using a stretching mallet, strike the flange directly over the V portion with light, even blows while gradually forcing it downward into the V Too heavy a blow will buckle the angle strip. Keep moving the angle strip across the V-block, but always strike the spot directly above the V. Form the curve gradually and evenly by moving the strip slowly back and forth, distributing the hammer blows at equal spaces on the flange.

(a) Pattern. Lay out a full-sized, accurate pattern on a sheet of paper or plywood and periodically check the accuracy of the curve. Comparing the angle with the pattern will determine exactly how the curve Is progressing and just where it needs to be increased or decreased. It is better to get the curve to conform roughly to the desired shape before attempting to finish any one portion, because the finishing or smoothing of the angle may cause some other portion of the angle to change shape. If any part of the angle strip is curved too much, reduce the curve by reversing the angle strip on the V-block, placing the bottom flange up, and striking it with light blows of the mallet.

(b) Work-hardening. Try to form the curve with a minimum amount of hammering, for excessive hammering will work-harden the metal. Work-hardening can be recognized by a lack of bending response or by springiness in the metal. It can be recognized very readily by an experienced worker in some cases, the part may have to be annealed during the curving operation. If so, be sure to heat treat the part again before installing it on the aircraft.

(2) Shrinking. Curving an extruded or formed angle strip by shrinking may be accomplished by either of two methods, the V-block method or the shrinking block method. Of the two, the V-block is, in general, more satisfactory because it is faster, easier, and affects the metal less. However, very good results can be obtained by the shrinking block method.

(a) V-block method. In the V-block method, place one flange of the angle strip flat on the V-block with the other flange extending upward, as shown in figure 6-15. Hold it firmly so that it does not bounce when hammered, and strike the edge of the upper flange with light blows of a round, soft-faced mallet. Begin at one end of the angle strip and, working back and forth, strike light blows directly over the V-portion of the block. Strike the edge of the flange at a slight angle as this tends to keep the vertical flange from bending outward. Occasionally, check the curve for accuracy with the pattern. If a sharp curve is made, the angle (cross section of the formed angle) will close slightly. To avoid such closing of the angle, clamp the angle strip to a hardwood board with the hammered flange facing upward using small C-clamps. The jaws of the C-clamps should be covered with masking tape. If the angle has already closed, bring the flange back to the correct angle with a few blows of a mallet or with the aid of a small hardwood block. If any portion of the angle strip is curved too much, reduce it by reversing the angle on the V-block and hammering with a suitable mallet, as explained in the previous paragraph on stretching. After obtaining the proper curve, smooth the entire angle by planishing with a soft-faced mallet.

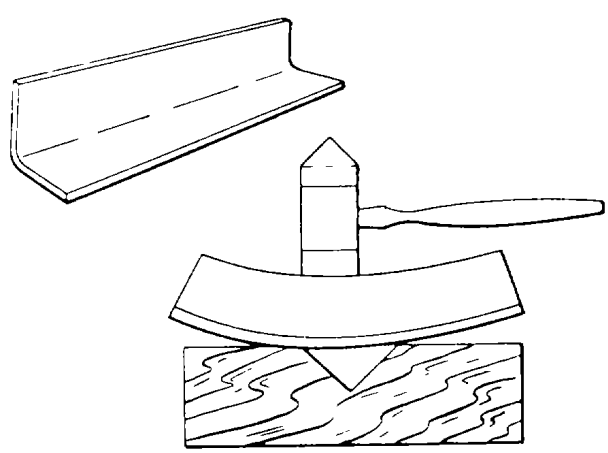

Figure 6-15. Shrinking by V-Block Method

(b) Shrinking block method. If the curve in a formed angle is to be quite sharp or if the flanges of the angle are rather broad, the shrinking block method is generally used In this process, crimp the flange which is to form the inside of the curve.

1 Crimping. When making a crimp, hold the crimping pliers so that the jaws are about 1/8 in apart. By *rotating the wrist* back and forth, bring the upper jaw of the pliers into contact with the flange, first on one side and then on the other side of the lower jaw. Complete the crimp by working a raised portion into the flange, gradually increasing the twisting motion of the pliers. This is shown in figure 6-12. Do not make the crimp too large because it will be difficult to work out. The size of the crimp depends upon the thickness and softness of the material, but usually about 1/4 in. is sufficient. Place several crimps spaced evenly along the desired curve with enough space left between each crimp so that jaws of the shrinking block can easily be attached.

2 Shrinking. After completing the crimping, place the crimped flange in the shrinking block so that one crimp at a *time is* located between the jaws. Flatten each crimp with light blows of soft- faced mallet, starting at the apex (the closed end) of the crimp and gradually working toward the edge of the flange. Check the curve of the angle with the pattern periodically during the forming process and again after all the crimps have been worked out. If it is necessary to increase the curve, add more crimps and repeat the process. Space the additional crimps between the original ones so that the metal will not become unduly work-hardened at any one point. If the curve needs to be increased or decreased slightly at any point, use the V-block.

c. Forming Flanged Angles. The forming process for the following two flanged angles is slightly more complicated than that just discussed in that the bend is shorter (not gradually curved) and necessitates shrinking or stretching in a small or concentrated area. If the flange is to point toward the inside of the bend, the material must be shrunk. If it is to point toward the outside, it must be stretched.

(1) Shrinking. In forming a flanged angle by shrinking, use wooden forming blocks similar to those shown in figure 6-16 and proceed as follows.

(a) Cut the metal to size, allowing for trimming after forming. Determine the bend allowance for a 90-degree bend and round the edge of the forming block accordingly.

(b) Clamp the material in the form blocks as shown in figure 6-16, and bend the exposed flange against the block. After bending, tap the blocks slightly. This induces a setting process in the bend.

(c) Using a soft-faced shrinking mallet, start hammering near the center and work the flange down gradually toward both ends. The flange will tend to buckle at the bend because the materal is made to occupy less space. Work the material into several small buckles instead of one large one and work each buckle out gradually by hammering lightly and gradually compressing the materal in each buckle. The use of a small hardwood wedge block, as shown in figure 6-17, will aid in working out the buckles.

(d) Planish the flange after it is flattened against the form block and remove small irregularities. If the form blocks are made of hardwood, use a metal

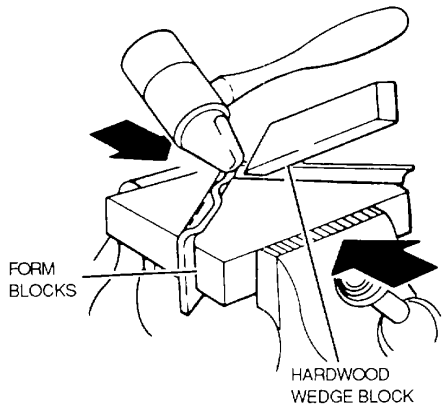

Figure 6-16. Forming a Flanged Angle by Shrinking

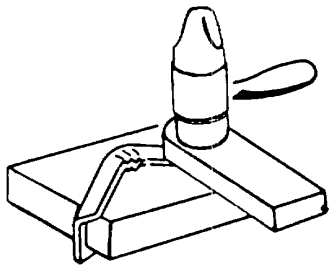

Figure 6-17. Working Out Buckles

planishing hammer If the forms are made of metal, use a soft-faced mallet. Trim the excess materal away and file and polish.

(2) Stretching. To form a flanged angle by stretching, use the same forming blocks, wooden wedge block, and mallet as in the shrinking process and proceed as follows:

(a) Cut the material to size (allowing for trim), determine bend allowance for a 90-degree bend, and round off the edge of the block to conform to the desired radius of bend.

(b) Clamp the material in the form blocks as shown in figure 6-18.

(c) Using a soft-faced stretching mallet, start hammering near the ends and work the flange down smoothly and gradually to prevent cracking and splitting. Planish the flange and angle as described in the previous procedure, and trim and smooth the edges, If necessary.

(d) Forming Curved Flanged Parts. Curved flanged parts are usually hand-formed. They usually have a concave flange (the inside edge), and a convex flange (the outside edge). Note the various types of forming represented in the following figures. Figure 6-19 shows a plain nose rib. Only one convex flange is used, but because of the great distance around the part and the potentiality of buckles in forming, it is rather difficult to form. The flange and the beaded portion of this rib, however, provide sufficient strength to make this a very good type to use. In figure 6-20, the concave flange gives difficulty in forming, however, the outside flange is broken up into smaller sections by relief holes, which are notches that prevent strain in a bend in the type shown in figure 6-21, note that crimps are inserted at equally spaced intervals. The crimps are placed to absorb material and cause curving while also giving strength to the part. In the nose rib shown in figure 6-22, note that a combination of the four common forming methods is applied. They are crimping, beading, putting in relief holes, and using a formed angle riveted on at each end. The beads and the formed angles supply strength to the part.

(1) Forming methods. The concave flange is formed by stretching, and the convex flange by shrinking. These may be formed with the aid of hardwood or metal forming blocks.

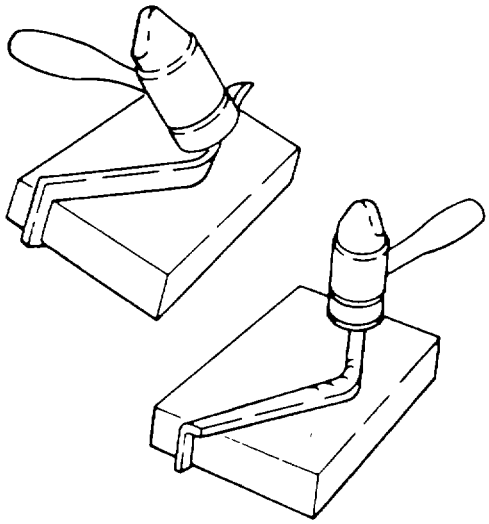

Figure 6-18. Forming a Flanged Angle by Stretching

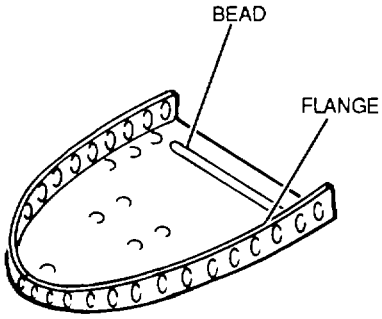

Figure 6-19. Plain Nose Rib

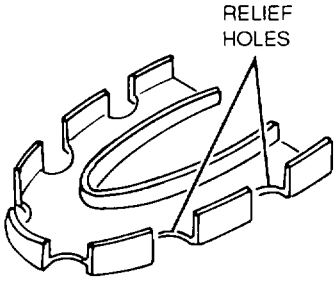

Figure 6-20. Nose Rib with Relief Holes

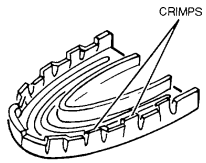

Figure 6-21. Nose Rib with Crimps and Beads

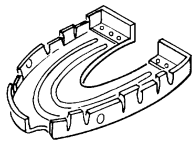

Figure 6-22. Nose Rib Using Beads, Crimps, Relief Holes, and Riveted Angles

(2) <u>*Forming blocks*</u>. These blocks are made in pairs similar to those used for straight angle bends and are identified in the same manner. They differ in that they are made specifically for the particular part to be formed, they fit each other exactly, and they conform to the actual dimensions and contour of the finished article. The mating parts may be equipped with aligning pins to aid in lining up the blocks and holding the metal in place. The blocks may be held together by C-clamps or a vise. They also may be held together with bolts by drilling through both forms and the metal, provided the holes do not affect the strength of the finished part. The edges of the forming block are rounded to give correct radius of bend to the part, and are undercut to allow for springback of the metal. The undercut is especially necessary if the material is hard or if the bend must be highly accurate.

(3) <u>*Forming procedures*</u>. The major steps in forming a curved flanged part are explained as follows:

(a) Cut the material to size (allowing for trim), locate and drill holes for alignment pins, and remove all burrs (jagged edges) Figure 6-23 shows the metal and the forming blocks to be put together.

(b) Place the material between the wooden blocks. Clamp blocks tightly in a vise so that the material will not move or shift. Clamp the work as closely as possible to the particular area being hammered to prevent strain on the form blocks and to keep the metal from slipping.

(c) Bend the flange on the concave curve first. Using a soft mallet or wooden wedge block, start hammering at a point a short distance away from the beginning of the concave bend and continue toward the center of the bend (figure 6-24). Continue hammering until the metal is gradually worked down over the entire flange, flush with the form block.

(d) Starting at the center of the curve and working toward both ends, hammer the convex flange down over the form (figure 6-25). Strike the metal with glancing blows, at an angle of approximately 30 degrees off perpendicular, and with a motion that will tend to pull the part away from the block.

(e) Stretch the metal around the radius bend and remove the buckles gradually by hammering on a wedge block

(f) While working the metal down over the form, keep the edges of the flange as nearly

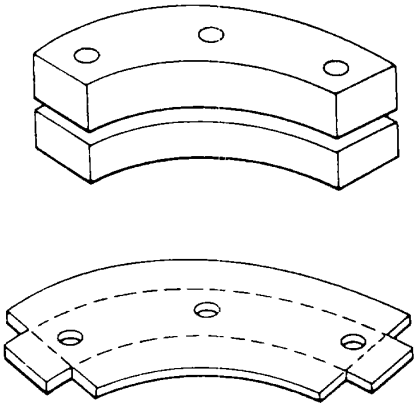

Figure 6-23. Metal and Forming Blocks

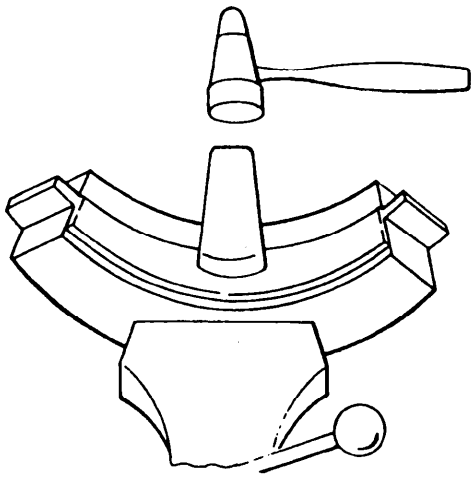

Figure 6-24. Forming a Concave Flange

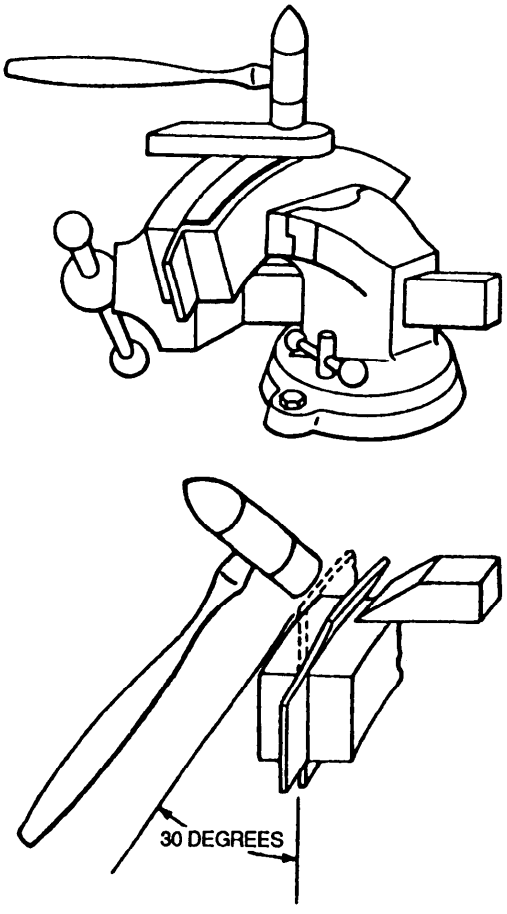

Figure 6-25. Forming a Convex Flange

dicular to the block, lessens the possibility of buckles and of splitting or cracking the metal, and aids in removing buckles.

(g) Finally, trim the flanges of excess metal, planish, remove burrs, round the corners (if any), and check the part for accuracy.

e. Forming by Bumping. The two commonly used methods of bumping are on a form block or female die and bumping on a sandbag. Either method requires only one form: a wooden block, a lead die, or a sandbag. The blister or streamlined cover plate is an example of a part made by the block or die method of bumping. Wing fillets are an example of parts that are usually formed by bumping on a sandbag.

(1) Form block bumping. This is done with a wooden block or lead die. Such a die or block designed for bumping must have the same dimensions and contour as the outside of the blister. To provide enough bucking weight and bearing surface for fastening the metal, the block or die should be at least 1 inch larger in all dimensions that the form requires (figure 6-26).

(a) Preparing the form block. The following procedures should be followed to create a form block:

1. Hollow the block out with tools such as saws, chisels, gouges, files, and rasps.

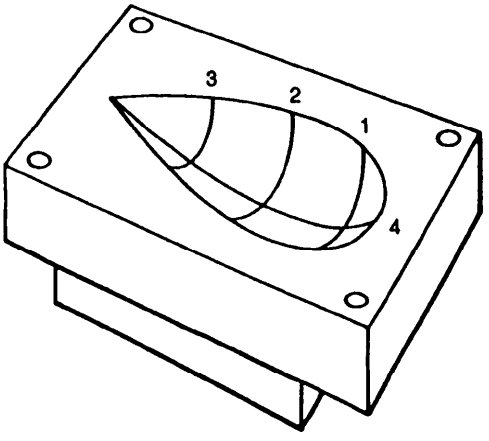

Figure 6-26. Bumping Block

2 Smooth and finish the block with sandpaper. The inside of the form must be as smooth as possible, because the slightest irregularity will show up on the finished part.

3 Prepare several templates (patterns of the cross-section) as shown in figure 6-27 so that the form can be checked for accuracy.

4 Shape the contour of the form at points 2, 3, and 4 shown in figure 6-27.

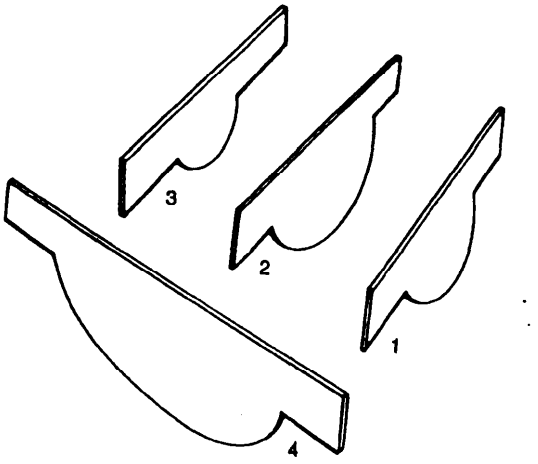

Figure 6-27. Templates

5 Shape the areas between the template check points to conform the remaining contour to template 4.

(b) Clamp the material to the forming block. A metal cutout or a steel holddown plate shown in figure 6-28 are best for this purpose.

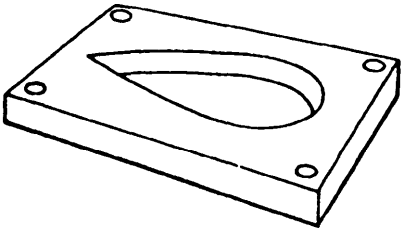

Figure 6-28. Hold-Down Plate

1 Place the hold-down plate directly over the material to be formed and clamp it in position with bolts or C-clamps.

2 Tighten the bolts or C-clamps just enough to hold the material flat against the face of the forming block but not so tightly that the metal cannot be drawn into the form. Ensure that the material is held flat against the form.

(c) Bumping procedure. After the form is prepared and checked, perform the bumping as follows:

1 Cut a metal blank to size allowing an extra one-half to 1 inch to permit drawing.

2 Apply a thin coat of light oil to the block and the aluminum to prevent galling (scraping on rough spots).

3 Clamp the material between the block and steel plate so that it will be firmly supported and yet able to slip a little toward the inside of the form.

4 Clamp the bumping block in a bench vise. Use a soft-faced rubber mallet or a hardwood drive block with a suitable mallet to start the bumping near the edges of the form.

5 Work the material down gradually from the edges with light blows of the mallet. Remember that the purpose of bumping is to work the material into shape by stretching rather than forcing it into the form with heavy blows. Always start bumping near the edge of the form. Never start near the center of the blister.

6 Before removing the work from the form, smooth it as much as possible by rubbing it with the rounded end of either a maple block or a stretching mallet.

7 Remove the blister from the bumping block and trim to size.

(2) Sandbag bumping. This is one of the most difficult methods of hand-forming sheet metal because there is no exact forming block to guide the operation. Therefore, a depression must be driven into the sandbag to take the shape of the hammered portion of the metal. The following procedure for bumping sheet metal parts on a sandbag includes certain basic steps that can be applied to any part, regardless of its contour or shape.

(a) Layout and cut the contour template (This can be made of sheet metal, medium-heavy cardboard, or thin plywood).

(b) Determine the amount of metal needed, lay It out, and cut It to size, allowing at least one-half inch in excess.

(c) Place a sandbag on a solid foundation capable of supporting heavy blows and make a pit In the bag with a smooth-faced mallet. Analyze the part to determine the correct radius the pit should have for the forming operation. The pit will change shape with the hammering it receives and must be readjusted occasionally.

(d) Select a soft round-faced or bell-shaped mallet with a contour slightly smaller than the contour desired on the sheet metal part. Hold one edge of the metal in the left hand and place the portion to be bumped near the edge of the pit on the sandbag. Strike the metal with light, glancing blows about one-half to 1 inch from the edge. This is shown in figure 6-29.

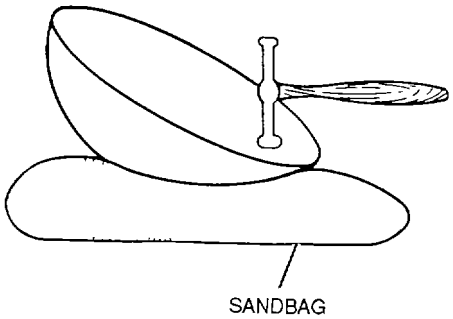

Figure 6-29. Sandbag Bumping

(e) Continue bumping toward the center, revolving the metal and working gradually Inward until the desired shape is obtained. Shape the entire part as a unit.

(f) Check the part often for accuracy of shape during the bumping process by applying the template. If wrinkles form, work them out before they become too large.

(g) Finally, remove small dents and hammer marks with a suitable stake and planishing hammer or with a hand dolly and planishing hammer.

(h) After bumping is completed, use a pair of dividers to mark around the outside of the object. Trim the edge and file it smooth. Clean and polish the part.

f *Joggling*. A joggle is an offset formed on an angle strip to allow clearance for a sheet or an extrusion. Joggles are often found at the intersection of stringers and formers. One of these members, usually the stringer, has the flange joggled to fit flush over its own flange. The amount of offset is usually small, therefore, the depth of the joggle is generally specified in thousandths of an inch and is governed by the thickness of the material to be cleared in determining the required length of the joggle, it is common practice to allow 1/16 inch of added clearance, enough to ensure a fit between the joggled and the overlapped part. Various methods can be used to form joggles.

(1) Joggle on a straight flange. If the joggle is to be made on a straight flange or flat piece of metal, form it on a cornice brake by inserting and bending it up along the line of the joggle. Hold a piece of metal thick enough to give the desired offset under the bent-up portion and pound the flange down while the metal is still in the same position in the brake.

(2) Joggle on a curved flange. When a joggle is needed on a curved flange, forming blocks or dies (figure 6-30) made of hardwood, steel, or aluminum alloy may be used. If the die will be used only a few times, hardwood Is satisfactory because it is easy to work. If the die will be used many times to produce a number of joggles, use steel or aluminum alloy dies. The latter are preferred because they are easier to fabricate than steel dies, they will wear about as long, they are soft and resilient enough to permit aluminum alloy parts to be formed on them without marring, and nicks and scratches are easily removed from their surfaces.

NOTE

When using joggling dies for the first time, test them for accuracy on a piece of waste stock to prevent ruining already fabricated parts. Always keep the surfaces of the blocks free from dirt, filings, and the like, so that the work will not be marred.

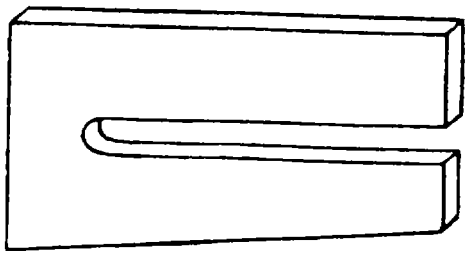

Figure 6-30. Joggling Die

g. Relief Holes. Where two bends intersect, material must be removed to make room for the material contained in the flanges. Therefore, relief holes are drilled at the intersection of the inside bend tangent lines to prevent strains that might cause the metal to crack. Relief holes also provide a neatly trimmed corner where the excess material is trimmed away Their size varies with the thickness of the material. They should not be less than 1/8 inch in diameter for aluminum alloy sheet stock up to and including 0.064 inch of thickness, or 3/16 inch in diameter for stock ranging in thickness from 0.072 inch to 0.128 inch. The most common method for determining the diameter of a relief hole is to use the radius of bend for this dimension, provided it is not less than the minimum allowance (1/8 inch). It is a good practice to use the intersection of these lines as the center for the holes (figure 6-31). The line on the inside of the curve is cut at an angle toward the relief holes to allow for stretching the inside flange.

h. Lightening Hole. Holes are occasionally cut In rib sections, fuselage frames, and other structural parts to reduce weight. Such holes are known as lightening holes. To keep from weakening the member by removing the material, flanges are often pressed around the holes to strengthen the area from which the material was removed. These holes should never be cut in any structural part unless authorized. The size of the lightening hole and the width of the flange around the hole are determined by design specifications that consider margins of safety so that the weight of the part can be reduced and still retain the necessary strength. These lightening holes can be cut by any of the following methods.

(1) Punching. Lightening holes can be punched out, if the correct size punch die is available.

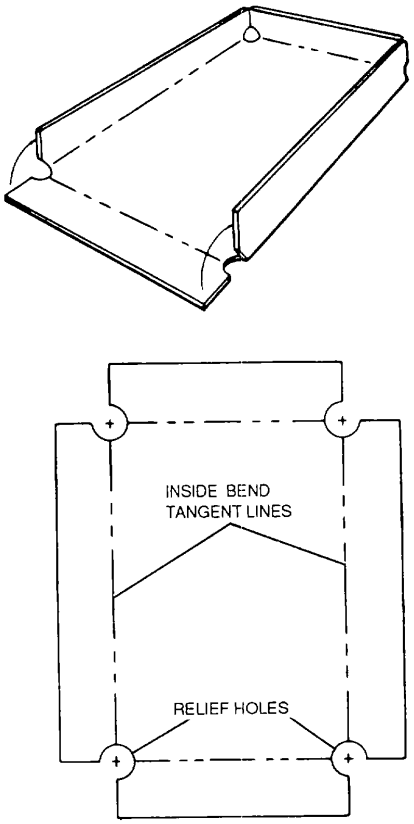

Figure 6-31. Relief Holes

(2) Scribing. The circumference of a hole can be scribed with dividers. Dies are then inserted in a vise or arbor press, and the circumference drilled. The dies will work more smoothly in a hydraulic press if they are coated with light machine oil.

(3) Using the chamfered flanging block. The material is centered in a chamfered flanging block, shown in figure 6-32. The metal is then hammered with a rubber mallet until the flange conforms to the chamfer. In the other forming blocks shown in the figure, the hole being chamfered is formed by using a male die that is chamfered to the width of the flange and the desired angle. The hole has the same diameter as the flange. Either type of forming block may be used

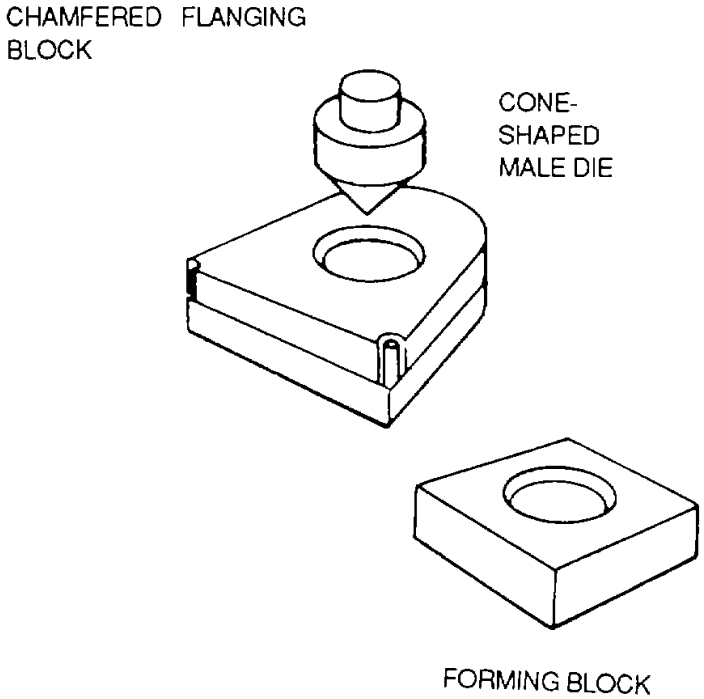

Figure 6-32. Chamfered Flanging Block

CHAPTER 7

RIVETS AND RIVETING TECHNIQUES

7-1. General. Rivets used in aircraft construction are generally fabricated from aluminum alloy. However, in special cases, Monel, corrosion-resistant steel, mild steel or iron, and copper rivets are used. Rivets are divided into two main groups. common solid shank rivets and special rivets. Common solid shank rivets are those most commonly used for fastening aircraft structures. Special rivets are those designed for special application where common solid shank rivets are not suitable. Examples of special rivets are: Hi-Shear, Cherry, Huck, Rivnuts, and Olympic.

7-2. Solid Shank Rivets. Solid shank rivets are the most common type of rivets used in aircraft construction. As the name implies, these rivets are solid metal, and are installed in a hole and upset, forming a second head which firmly holds the material in place.

a. Materials and Use. Aluminum alloy is the material used for most aircraft solid shank rivets. The strength and temper conditions of aluminum alloy rivets are identified by digits and letters similar to those adopted to identify the strength and temper conditions of aluminum and aluminum alloy sheet stock Steel, Monel, and copper are other materials used for rivets in certain cases.

CAUTION

Dangerous corrosion will result with the use of dissimilar metals, such as steel, corrosion- resistant steel, Monel, copper or iron, in riveting aluminum structures. Such applications will only be made under emergency conditions. Rivets will be coated with epoxy primer MIL-P-23377 before installation and installed wet. After installation of rivet, another coat of epoxy primer will be applied. Proper replacement will be made as soon as materials are available.

(1) Aluminum alloys. The following paragraphs describe the common rivets made of aluminum alloy.

(a) Alloy 1100. The 1100 rivet is composed of 99 percent pure aluminum and is very soft. It is used for riveting the softer aluminum alloys (1100, 3003, and 5052) that are used for nonstructural parts where strength is not a factor.

(b) Alloy 2117-T4. The 2117-T4 rivet is used more than any other rivet for riveting aluminum alloy structures. Its main advantage is that it is ready for use as is when received and needs no further heat-treating or annealing. It also has a high resistance to corrosion.

(c) Alloys 2017-T4 and 2024-T4. Use these rivets in aluminum alloy structures where strength higher than that of the 2117-T4 rivet Is required These rivets are generally used in sizes of 3/16-inch diameter and larger

(d) Alloy 5056. Use this rivet for riveting magnesium alloy structures because of its corrosion- resistant qualities. No other rivets should be used for this purpose, except under extreme conditions.

(2) Mild steel. Mild steel rivets are used for riveting steel parts. Galvanized rivets should not be used on steel parts that are subjected to high heat.

(3) Corrosion-resistant steel. Corrosion-resistant steel rivets are used primarily in riveting corrosion-resistant steel parts such as firewalls, exhaust stack bracket attachments, and similar structures.

(4) Monel. These are used in special cases for riveting high nickel-steel alloys and nickel alloys. Monel rivets may be used interchangeably with corrosion- resistant steel rivets and are easier to drive. However, it is preferable to use stainless steel rivets with stainless steel parts.

(5) Copper. These are used for riveting copper alloys, leather, and other nonmetallic materials. Copper rivets have only limited uses in aircraft.

(6) Corrosion-resistance. Corrosion resistance is generally considered adequate when the rivet material is the same, or almost the same type as that of the structure being riveted, provided the proper anti-corrosion surface treatment has been applied. An example of this is the use of anodized 2117-T4, 2017-T4 and 2024-T4 rivets to attach any aluminum alloy structure without producing adverse corrosion effects.

b. Rivet Identification. Solid shank rivets are identified by head markings and part number. Figure 7-1 shows the two rivet styles, countersunk and universal, and gives their materials and Military Standard (MS) numbers. Figure 7-2 shows the head markings and associated information. The part number is broken down as follows.

MS 20470AD5-12P

where:

MS = Military Standard
20470 = Head style
AD = Material code
5 = Diameter In 1/32 Inch
12 = Length In 1/16 inch
P = Cadmium plated (for steel)

c. Rivet Heat-Treating. See paragraph 5-7g (6) for heat-treating procedures.

7-3. Repair Layout. Repair layout involves determining the number of rivets required, the proper size and style of rivets to be used, their material, temper condition and strength, the size of the holes, the distances between the holes, and the distance between the holes and the edges of the patch. Distances are measured In terms of rivet diameter.

a. Rivet Selection. The head type, size, and strength required in a rivet are governed by such factors as the kind of forces present at the point riveted, the kind and thickness of the material to be riveted, and the location of the part on the aircraft. The type of head needed for a particular job is determined by where it is to be installed. Countersunk head rivets should be used where a smooth aerodynamic surface is required. Universal head rivets may be used in most other areas.

(1) Diameter. The size (or diameter) of the rivet shank selected should correspond to the thickness of the material being riveted. If too large a rivet is used in a thin material, the force needed to drive the rivet properly will cause an undesirable bulging around the rivet head. If too small a rivet diameter is used for thick material, the rivet will not have enough shear strength to carry the load of the joint. As a rule, the rivet diameter should be at least two and a half to three times the thickness of the original sheet. The rivets most commonly chosen in the assembly and repair of aircraft range from 3/32 to 3/8 inch in. Diameter. Ordinarily, rivets smaller than 3/32 inch in diameter are not used on any structural parts that carry stresses. The proper size rivets to use for any repair can also be determined by referring to the rivets (used by the manufacturer) in the next parallel row inboard on the wing or forward on the fuselage. Another method of determining the size of rivets to be used is to multiply the skin's thickness by 3 and use the next larger size rivet corresponding to that figure. For example, if the skin's 0.040 inch thick, multiply 0.040 inch by 3 to get 0.120 inch and use the next larger size of rivet, 1/8 inch (0.125 inch).

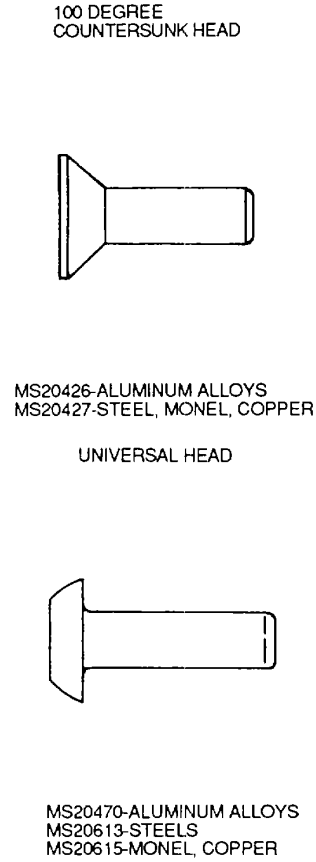

Figure 7-1. Solid Shank Rivet Styles and Materials

(2) Length. To determine the total length of a rivet to be Installed, the combined thickness of the materials to be joined must first be known. This measurement is known as the grip length (B, figure 7-3). The total length of the rivet (A, figure 7-3) equals the grip length plus the amount of rivet shank needed to form a proper shop head. The latter equals one and a half times the diameter of the rivet shank (C, figure 7-3). This Information is used to determine that A = B + C (where A is total rivet length, B is grip length, and C is the length of the material needed to form a shop head). Properly installed rivets are shown in D, figure 7-3. Grip lengths for universal-head and countersunk-head, solid shank rivets are listed in table 7-1.

MATERIAL	HEAD MARKING	MS MATERIAL-CODE	HEAT-TREAT BEFORE USING	STRENGTH (PSI)	
				SHEAR	BEARING
1100	PLAIN	A	NO	10000	25000
2117	DIMPLED	AD	NO	30000	100000
2017	RAISED TEAT	D	YES	34000	113000
2024	RAISED DOUBLE DASH	DD	YES	41000	136000
5056	RAISED CROSS	B	NO	27000	90000
CARBON STEEL	RECESSED TRIANGLE		NO	35000	90000
CORROSION - RESISTANT STEEL	PLAIN	F	NO	75000	90000
MONEL FEDERAL SPECIFICATION QQ-N-281	RECESSED DOUBLE DIMPLE	M	NO	55000	
ZOPPER FEDERAL SPECIFICATION QQ-W-343	PLAIN	CU	NO	25000	

Figure 7-2. Solid Shank Rivet Head Markings

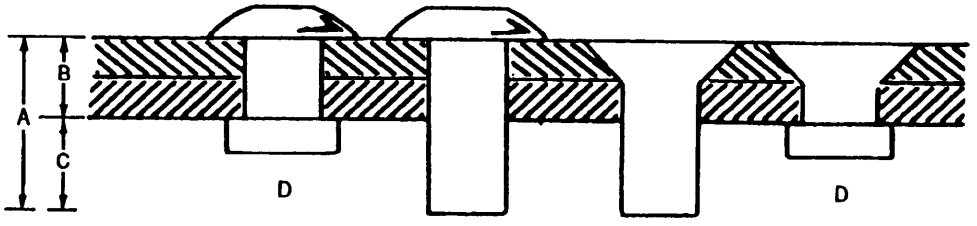

A TOTAL RIVET LENGTH
B GRIP LENGTH
C AMOUNT OF RIVET LENGTH NEEDED FOR PROPER SHOP HEAD (1-1/2 x RIVET DIAMETER)
D INSTALLED RIVETS

Figure 7-3. Factors in Determining Rivet Length

NOTE

When the grip length falls between those given in table 7-1, select a longer rivet. Grip equals total material thickness. If a rivet of proper length is not available, cut off the longer rivet to the exact length (not grip) required.

b. Rivet Strength. For structural applications, the strength of the replacement rivets is of primary importance. Rivets made of material that are lower in strength should not be used as replacements unless the shortfall is made up by using a larger rivet. For example, a rivet of 2024-T4 aluminum alloy should not be replaced with one of 2117-T4 or 2017-T4 aluminum alloy unless the next larger size is used. There are two specific stresses which are applied to rivets: shear and tension.

Table 7-1. Grip Lengths for Solid Shank Rivets

Correct Rivet Lengths for Universal-Head Rivets

Diameter		3/32	3/8	5/32	3/16	1/4
Length of Rivet (See Note 1.)	Dash number for Rivet	Grip	Grip	Grip	Grip	Grip
1/8	-2	0	0	0	0	0
3/16	-3	0.047	0	0	0	0
1/4	-4	0.109	0.062	0.016	0	0
5/16	-5	0.171	0.124	0.078	0.031	0
3/8	-8	0.234	0.187	0.141	0.094	0
7/16	-7	0.297	0.250	0.204	0.157	0.063
1/2	-8	0.359	0.312	0.266	0.219	0.125
9/16	-9	0.421	0.374	0.328	0.281	0.187
5/8	-10	0.484	0.437	0.391	0.344	0.250
11/16	-11	0.547	0.500	0.454	0.407	0.313
3/4	-12	0.609	0.562	0.516	0.469	0.375
13/16	-13	0.671	0.624	0.578	0.531	0.437
7/8	-14	0.734	0.687	0.641	0.594	0.500
15/16	-15	0.796	0.749	0.703	0.656	0.562
1	-16	0.859	0.812	0.766	0.719	0.625

Correct Rivet Lengths for Countersunk-Head Rivets

1/8	-2	0	0	0	0	0
3/16	-3	0.047	0	0	0	0
1/4	-4	0.109	0.062	0.016	0	0
5/16	-5	0.171	0.124	0.078	0.031	0
3/8	-6	0.234	0.187	0.141	0.094	0
7/16	-7	0.297	0.250	0.204	0.157	0.063
1/2	-8	0.359	0.312	0.266	0.219	0.125
9/16	-9	0.421	0.374	0.328	0.281	0.187
5/8	-10	0.484	0.437	0.391	0.344	0.250

Table 7-1. Grip Lengths for Solid Shank Rivets - Con't

Correct Rivet Lengths for Countersunk-Head Rivets

Diameter		3/32	1/3	5/32	3/16	1/4
Length of Rivet (See Note 1.)	Dash number for rivet	Grip	Grip	Grip	Grip	Grip
11/16	-11	0.547	0.500	0.454	0.407	0.313
3/4	-12	0.609	0.562	0.516	0.469	0.375
13/16	-13	0.671	0.624	0.578	0.531	0.437
7/8	-14	0.734	0.687	0.641	0.594	0.500
15/16	-15	0.796	0.749	0.703	0.656	0.562
1	-16	0.859	0.812	0.766	0.719	0.625

NOTES:

1. When the grip length falls between those given in the table, select a longer rivet. Grip equals total material thickness. If a rivet of proper length is not available, cut off the longer rivet to the exact length (not grip) required.
2. Dimensions are shown in inches.
3. Longer rivets than those indicated are available.

(1) Shear. The shear strength is found in table 7-2. It is the amount of force required to cut a rivet that holds two or more sheets of material together. If the rivet holds two parts, it is under single shear; if it holds three sheets or parts, it is under double shear. To determine the shear strength, the diameter of the rivet to be used must be found by multiplying by 3 the thickness of the skin material. For example, a material thickness of 0.040 inch multiplied by 3 equals 0.120 inch; in this case, the rivet diameter selected would be 1/8 (0.125) inch.

(2) Tension. The resistance to tension is called bearing strength. The bearing strength is found in table 7-3. It is the amount of tension required to pull a rivet through the edge of two sheets riveted together or to elongate the hole. The diameter of the rivet to be used and the thickness of the material being riveted must be known to use table 7-3. The diameter of the rivet is the same as that used when determining its shear strength value and the thickness of the material is that of the material being repaired.

c. Rivet Spacing. Specific considerations in laying out the rivet pattern for a repair must conform with procedures given in the structural repair instruction manuals of the various aircraft or with instructions given by authorized service personnel. However, there are some rules which will apply generally in all instances.

- When possible, rivet edge distance, rivet spacing, and distance between rows should be the same as that of the original installation.
- When new sections are to be added, the edge distance measured from the center of the rivet should never be less than two times the diameter of the shank; the distance between rivets or pitch should be at least three times the diameter; and the distance between rivet rows should never be less than 2-1/2 times the diameter.

Table 7-2. Single Shear Strength of Aluminum Alloy Rivets

Rivet Diameter	1/16	3/32	1/8	5/32	3/16	1/4	5/16	3/8
				Universal Head				
2117-T4	106	217	389	596	860	1556	2458	3511
2017-T4	120	246	441	657	974	1764	2786	3979
2024-T4	144	296	532	814	1175	2127	3359	4798
6056	95	195	347	536	774	1400	2210	3160
				100 Degree Dimple Countersunk				
2117-T4		276	480	735	1020			
2017-T4		300	530	810	1130			
2024-T4		350	620	950	1325			
				100 Degree Machine Countersunk				
2117-T4		186	331	518	745			
2017-T4		206	368	574	828			
2024-T4		241	429	670	966			

Ultimate shear strength:	2117-T4	30000 psi
	2017-T4	34000 psi
	2024-T4	41000 psi
	5056	27000 psi

(1) Edge distance. The edge distance, or distance from the center of the first rivet to the edge of the sheet, should be not less than two nor more than four rivet diameters. The recommended edge distance is about two and a half rivet diameters. If rivets are placed too close to the edge of the sheet, the sheet may crack or pull away from the rivets. If they are spaced too far from the edge, the sheet is likely to turn up at the edges (see figure 7-4).

(2) Rivet pitch. Rivet pitch is the distance between the centers of neighboring rivets in the same row. The smallest allowable rivet pitch is three rivet diameters. The average pitch is usually between six and eight rivet diameters, although it may range from 4 to 10 diameters. Transverse pitch is the perpendicular distance between rivet rows. It is usually 75 percent of the rivet pitch. The smallest allowable transverse pitch is two and a half rivet diameters.

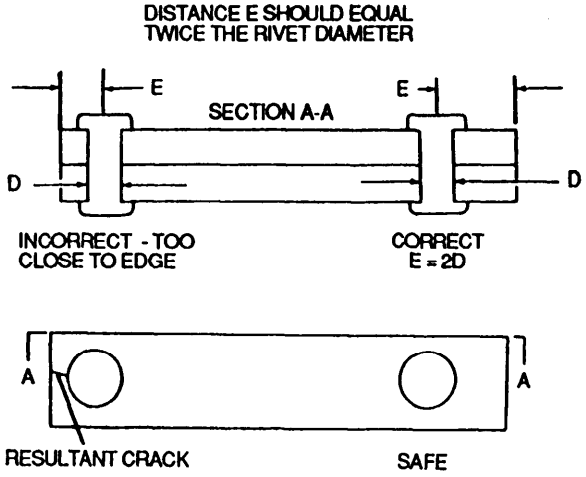

Figure 7-4. Rivet Edge Distance

Table 7-3. Bearing Strength (Pounds)

Thickness of sheet	Diameter of rivet (inches)							
(inches)	3/32	1/8	5/32	3/16	3/16	1/4	5/16	3/8
0.014	71	107	143	179	215	287	358	430
0.016	82	123	165	204	246	328	410	492
0.018	92	139	184	230	276	369	461	553
0.020	102	153	205	256	307	410	412	615
0.025	128	192	256	320	284	512	640	768
0.032	164	245	328	409	492	656	820	984
0.036	184	276	369	461	553	738	922	1107
0.040	205	307	410	512	615	820	1025	1230
0.045	230	345	461	576	691	922	1153	1383
0.061	261	391	522	653	784	1045	1306	1568
0.064	---	492	656	820	984	1312	1640	1968
0.072	---	553	738	922	1107	1476	1845	2214
0.081	---	622	830	1037	1245	1660	2075	2490
0.091	---	699	932	1167	1398	1864	2330	2796
0.102	---	784	1046	1307	1569	2092	2615	3138
0.125	---	691	1281	1602	1922	2563	3203	3844
0.156	---	1198	1598	1997	2397	3196	3995	4794
0.188	---	1445	1927	2409	2891	3854	4818	5781
0.250	---	1921	2562	3202	3843	5125	6125	7686
0.313	---	2405	3308	4008	4811	6417	7568	9623
0.375	---	2882	8848	4803	5765	7688	9068	11529
0.500	---	3842	5124	6404	7689	10250	12090	15372

(3) General layout. The general rules for rivet spacing, as It is applied to a straight-row layout, are quite simple In a one-row layout, find the edge distance at each end of the row and then lay off the rivet pitch (distance between rivets) as shown in figure 7-5. In a two-row layout, lay off the first row, place the second row a distance equal to the transverse pitch from the first row, and then lay off rivet spots In the second row so that they fall midway between those in the first row. In the three-row layout, first lay off the first and third rows, then use a straightedge to determine the second row rivet spots.

d. Rivet Substitutions. Substitution of rivets generally depends on material, size, and head style. Material considerations must be followed In substituting one rivet material for another. The following paragraphs describe other factors which must be considered In rivet substitutions.

(1) Protruding head rivets. All protruding head rivets can be replaced by universal head MS20470 rivets.

(2) Countersunk head rivets. Countersunk head rivets should be replaced by rivets of the same type and degree of countersink. When the required countersunk head rivets are not available, a raised head rivet may be driven from the opposite side and upset into the countersink. Use care In this operation to keep the flat surface of the tools parallel to the work. Rivet length should be such that both the hole and the countersink are completely filled. When this Is impractical, the drilled out rivet head may be used as a washer and a universal head rivet inserted and driven In the normal manner. In such cases, extreme care must be exercised to drill the hole In the center of the counter-sunk rivet head.

NOTE

The procedure for using a universal-head rivet In a countersunk application should be confined to interior work, and should not be used In exterior applications on flush-riveted skin surfaces.

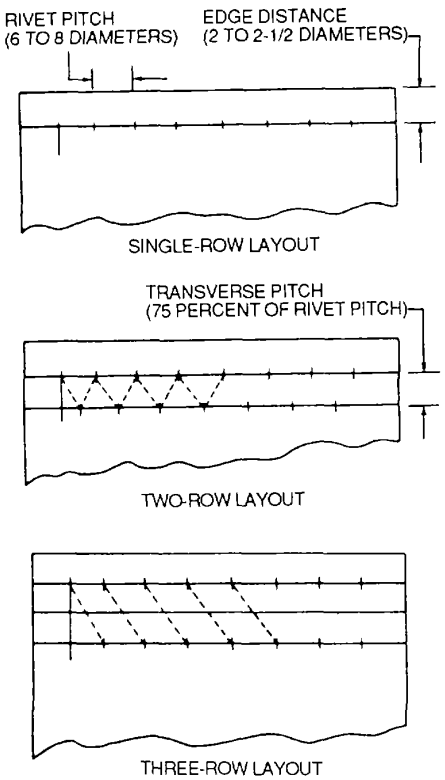

Figure 7-5. Rivet Spacing

(3) Use of other hardware. Cadmium or zinc-plated steel standard bolts, or NAS structural screws may be used to replace standard solid shank rivets only when the proper rivets or riveting equipment are not available. In such cases, steel bolts or screws of the same size as the replaced rivets are adequate for replacing any type rivet. Use the guidelines in the following paragraphs if replacing rivets with bolts or screws.

(a) Fit. A close fit should be obtained in such an installation.

(b) Zinc-plated bolts. Rapid deterioration is experienced by zinc-plated bolts subjected to high temperature, therefore, zinc-plated bolts are not to be used In place of corrosion-resistant steel rivets where temperatures over 700°F (371°C) are to be encountered.

(c) Cadmium-plated bolts. Lowering of corrosion resistance Is experienced by cadmium-plated bolts subjected to high temperature, therefore, cadmium-plated bolts are not to be used In place of corrosion-resistant steel rivets where temperature over 400°·F (204°C) are to encountered.

(d) Screws. Countersunk head screws may be used to join thin dimpled sheets with threads In bearing, since the load carried from sheet to sheet through the dimples imposes a load on the screw in tension rather than In shear.

7-4. Rivet Installation. The various tools needed in the normal course of driving and upsetting rivets include drills, reamers, rivet cutters or nippers, bucking bars, riveting hammers, draw sets, dimpling dies or other types of countersinking equipment, rivet guns, and squeeze riveters. Self-tapping screws, C-clamps, and fasteners are riveting accessories commonly used to hold sheets together when riveting. Several of these tools were discussed earlier In this manual. Other tools and equipment needed in the Installation of rivets are discussed In the following paragraph.

a. Hand Tools. These tools are used in the normal course of driving and upsetting rivets. They include rivet cutters, bucking bars, hand riveters, countersinks, and dimpling tools.

(1) Rivet cutter. In cases where rivets of the required length are unavailable, rivet cutters can be used to cut rivets to the desired length. When using the rotary rivet cutter, Insert the rivet In the correct hole, place the required number of shims under the rivet head, and squeeze as though It were a pair of pliers. Rotation of the disks will cut the rivet to give the right length, which Is determined by the number of shims inserted under the head. When using a large rivet cutter, place it in a vise, insert the rivet In the proper hole, and cut by pulling the handle, thus shearing off the rivet. If regular rivet cutters are not available, diagonal cutting pliers can be used as a substitute cutter. (see figure 7-6).

(2) Bucking bars. Bucking bars, sometimes called dollies, bucking Irons, or bucking blocks, are designed to make rivet bucking easier wherever rivets are used. They come In several different shapes and sizes as shown In figure 7-7, and their average weight is 6 pounds. Most bucking bars are made of alloy bar stock, but those that are made of better grades of steel last longer and require less reconditioning. This tool Is used by holding It against the shank end of a rivet while the shop head Is being formed. Bucking bars must be kept clean, smooth, and well-polished. Their edges

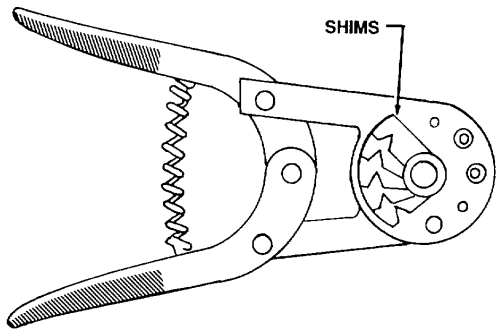

Figure 7-6. Rotary Rivet Cutter

should be slightly rounded to prevent marring the material around the riveting area. The bar usually has a concave face to conform to the shape of the shop head to be made.

(3) Hand rivet set. A hand rivet set Is a tool like a punch that has a die for driving a particular type of rivet. The ordinary set is made of 1/2-inch carbon tool steel, and is about 6 inches long and knurled to prevent slipping in the hand. Only the face of the set is hardened and polished. Special draw sets are used to draw up the sheets and close any opening between them before the rivet is bucked. Each draw set has a hole 1/32 inch larger than the diameter of the rivet shank it Is made for. Occasionally, the draw set and rivet header are incorporated in one tool. The header part consists of a hole shallow enough so that the set will expand and head the rivet when struck with a hammer.

(4) Countersink. The countersink is a tool that cuts a cone-shaped depression around the rivet hole to allow the rivet to set flush with the surface of the skin. Countersinks are made with angles to correspond with the various angles of the countersunk rivet heads. The standard countersink has a 100-degree angle, as shown In figure 7-8. Special stop countersinks are available, as shown in figure 7-9, that can be adjusted to any desired depth and have cutters to allow interchangeable holes with various countersunk angles to be made. Some stop countersinks also have a micrometer set mechanism, in 0001-inch increments, for adjusting their cutting depths.

(5) Dimpling tool. Dimpling is done with a male and female die (punch and die set). The male die has a guide the size of the rivet hole and with the same degree of countersink as the rivet. The female die has a hole with a corresponding degree of countersink into which the male guide fits. To perform dimpling, proceed as follows.

(a) Place male die in hole to be dimpled and then into female die which is resting on a solid surface.

(b) Hammer male die to form a dimple (figure 7-10).

(c) Remove burrs from all pilot holes before dimpling.

(d) Coin dimpling may be used, as an alternate method, when a punch and die set is not available. Proceed as follows.

1 Insert proper counter sunk rivet in pilot hole and back head with a bucking bar (figure 7-11).

2 Place gun draw tool (hand or fitted to a pneumatic gun) recessed in similar fashion to that of die set over rivet shank. As the rivet is driven, the head forms its own dimple.

3 Upset rivet shank In usual manner.

NOTE

Power squeezers may be used for this operation

b Power Tool. The most common power tools used in riveting are the pneumatic rivet gun, rivet squeezers, and the microshaver.

(1) Pneumatic rivet gun. The pneumatic rivet gun is the most common rivet upsetting tool used In airframe repair work. It is available in many sizes and types (see figure 7-12) The manufacturer's recommended capacity for each gun Is usually stamped on the barrel. Pneumatic guns operate on air pressure of 90 to 100 pounds per square Inch and are used in conjunction with interchangeable rivet sets. Each set is designed to fit the specific type of rivet and the location of the work. The shank of the set is designed to fit into the rivet gun. An air-driven hammer Inside the barrel of the gun supplies force to buck the rivet (see figure 7-13).

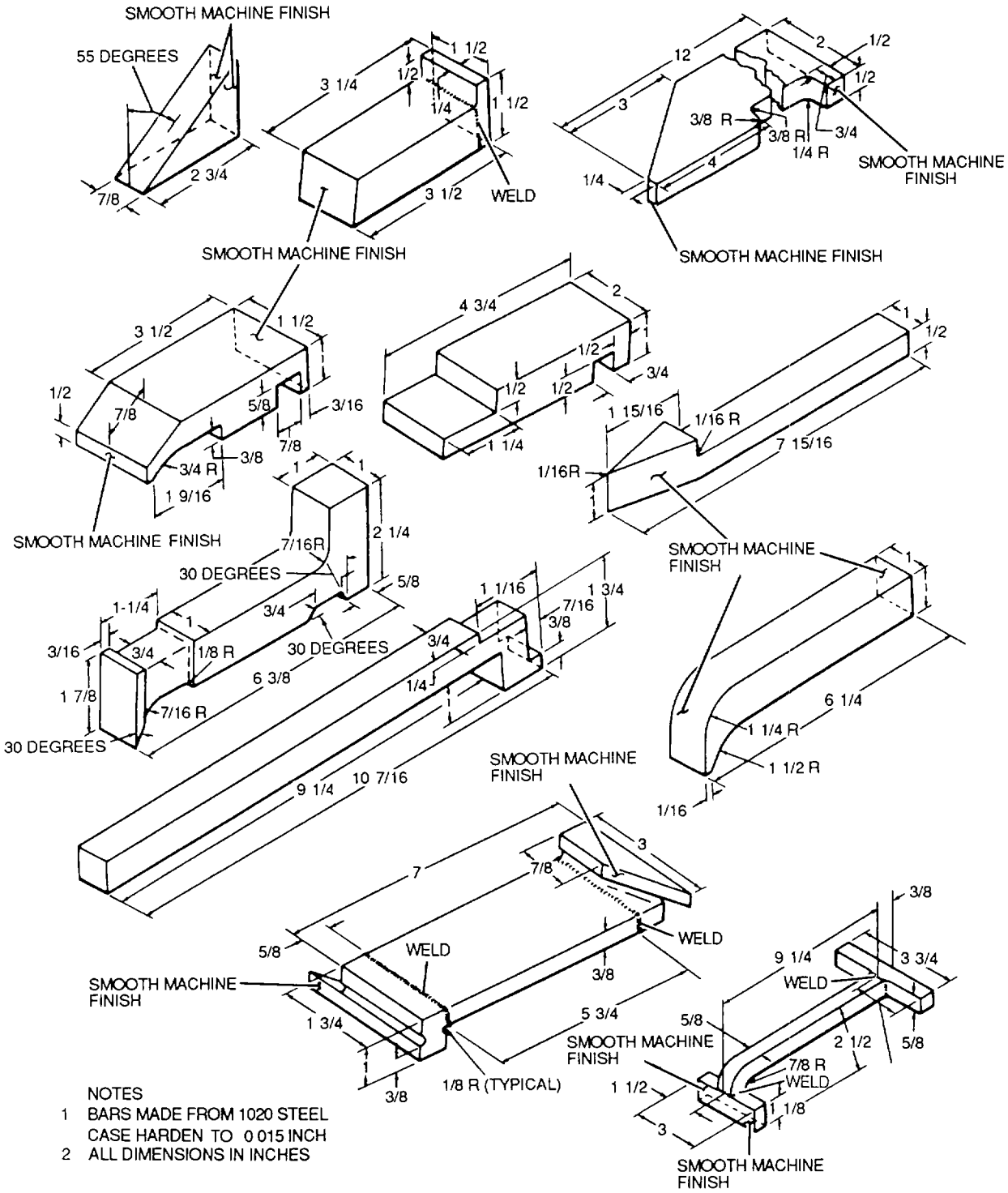

Figure 7-7. Bucking Bars

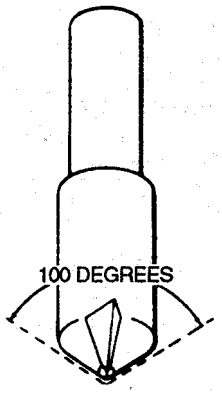

Figure 7-8. Standard Countersink

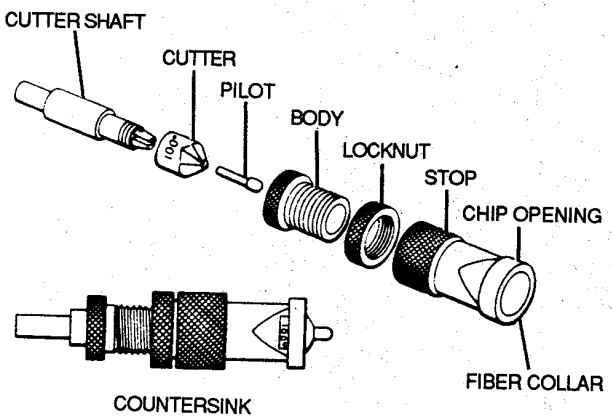

Figure 7-9. Stop Countersink

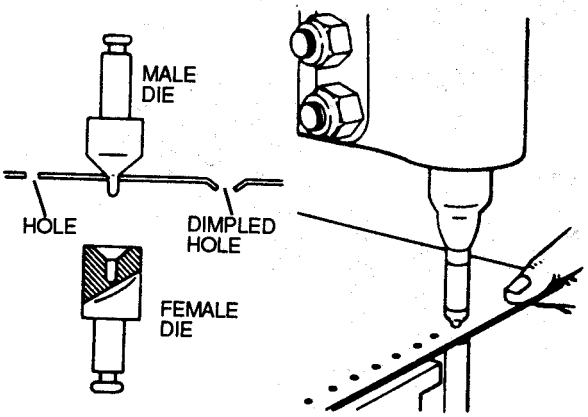

Figure 7-10. Dimpling

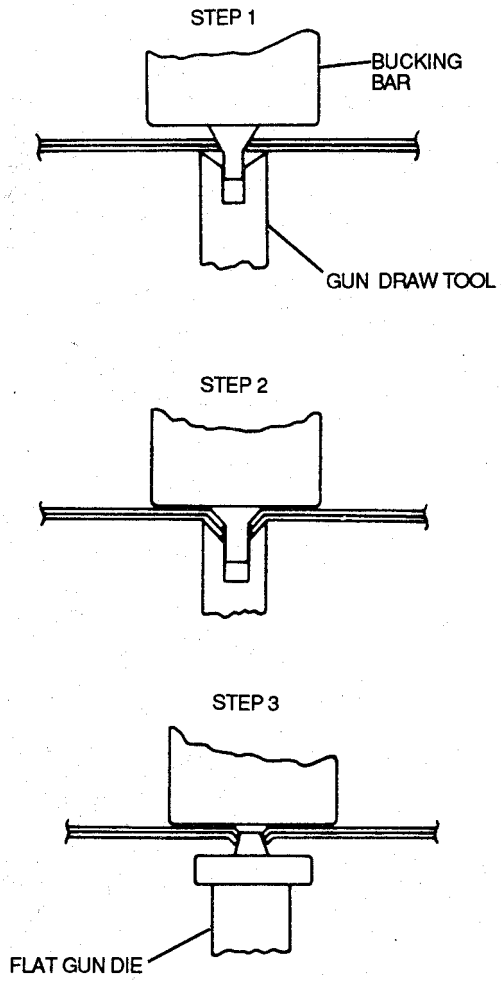

Figure 7-11. Coin Dimpling

(2) Rivet squeezers. Rivet squeezers are of limited value because this method of riveting can only be used over the edges of sheets or assemblies where conditions permit and where the rivet squeezer has a deep enough reach. There are two types of rivet squeezers hand and pneumatic (figure 7-14). They are basically alike, except that in the hand rivet squeezer compression is supplied by hand pressure and In the pneumatic rivet squeezer, It Is supplied by air pressure In both types, one jaw is stationary and serves as a bucking bar, the other jaw Is movable and does the upsetting. End sets for rivet squeezers serve the same purpose as rivet sets for pneumatic rivet guns and are available with the same type of heads. They are interchangeable to suit any type of rivet head. One part of each set is inserted In the stationary jaw, while the other part Is placed in the movable jaws. The manufactured head end set Is placed on the stationary jaw whenever

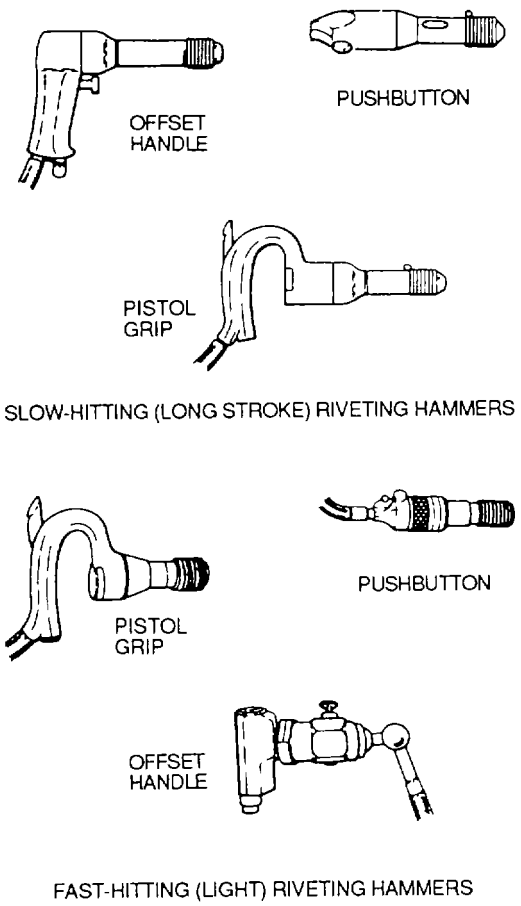

Figure 7-12. Pneumatic Rivet Guns

possible. However, during some operation It may be necessary to reverse the end sets, thus placing the manufactured head end set on the movable jaw.

(3) Microshaver. A microshaver, shown in figure 7-15, is used If the smoothness of the material (such as skin) requires that all countersunk rivets be driven within a specific tolerance. This tool has a cutter, a stop, and two legs or stabilizers. The cutting portion of the microshaver is Inside the stop. The depth of the cut can be adjusted by pulling outward on the stop and turning It in either direction (clockwise for deeper cuts). The marks on the stop permit adjustments of 0.001 Inch. If the microshaver Is adjusted and held correctly, it will cut the head of a countersunk rivet to within 0.002 inch without damaging the surrounding material. Adjustments should always be made first on scrap material. When correctly adjusted, the microshaver will leave a small round dot about the size of a pinhead on the microshaved rivet.

c. Riveting Procedure. The riveting procedure consists of drilling and preparing the hole, and driving the rivets. These techniques are discussed In the following paragraphs.

(1) Drilling. Rivet holes in field repair may be drilled with either a light power drill or a hand drill. The standard shank twist drill Is most commonly used.

(a) Hole transfer. Accomplish transfer of holes from a drilled part to another part by placing second part over first and using established holes as a guide. Using an alternate method, scribe hole location through from drilled part onto part to be drilled, spot with a center punch and drill.

(b) New sections. In areas Involving complete new sections, drill from skin Inward into stringer, or drill from stringer outward. In either case, first drill 0.098-inch pilot holes in member nearest operation, locate and attach second member to first by two C clamps or spring fasteners, size-drill through both members, separate sheets, and remove burrs from holes.

(c) Flimsy members. Drill flimsy members, such as light stringers, from skin surfaces after first marking rivet line along their length in pencil. When skin, pre-drilled with pilot holes, is placed over stringer, flex latter to bring pencil line center with skin holes. Apply an occasional Cleco-type holder to hold stringer In position. Drilling the skin from the stringer may often prove more convenient, but because of the flexibility of the customary stringer, the resulting rivet line in the skin may prove somewhat irregular.

(2) Drill sizes. Table 7-4 specifies drill sizes for specific rivet sizes. Table 7-5 specifies twist drill sizes from 1/2 Inch down to number 80, with the corresponding diameter In inches.

(3) Drilling practices. To drill, proceed as follows.

NOTE

Before drilling, center punch all rivet locations. The center punch mark should be large enough to prevent the drill from slipping out of position, yet It must not dent the surface surrounding the center punch mark (figure 7-16). Placing a bucking bar behind the metal during punching will help prevent denting.

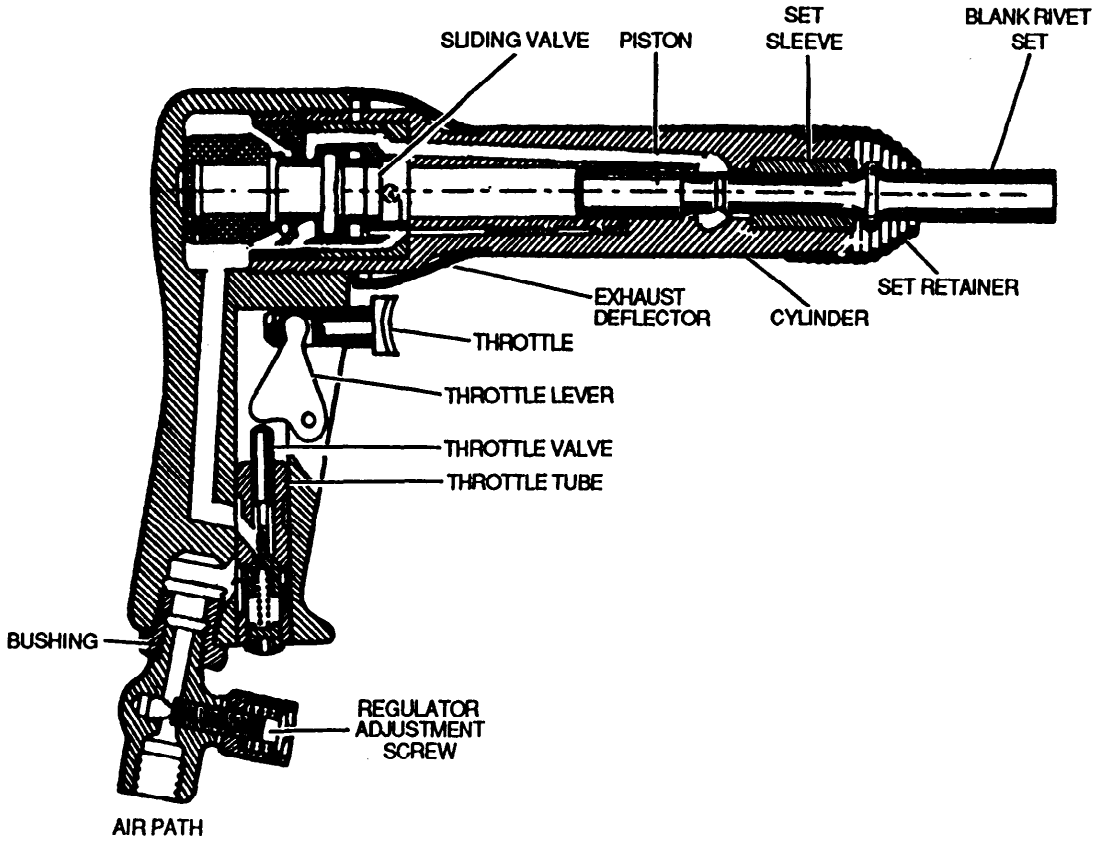

Figure 7-13. Pneumatic Rivet Gun Structure

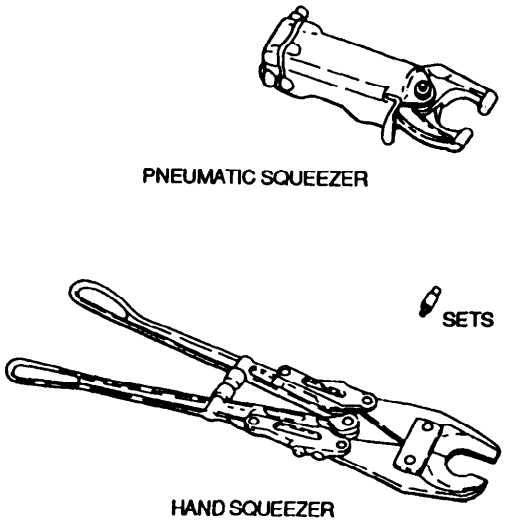

Figure 7-14. Rivet Squeezers

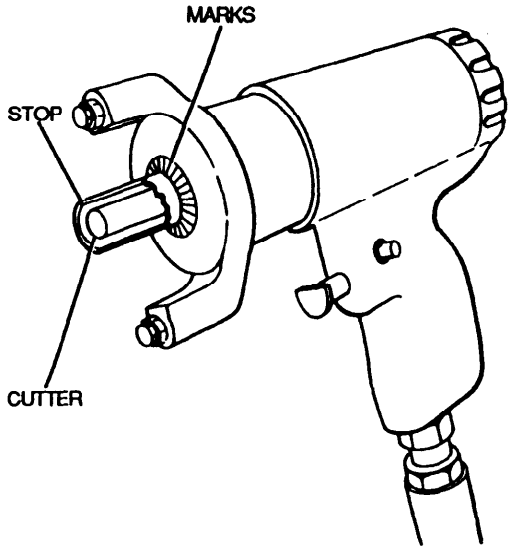

Figure 7-15. Microshaver

(a) Make sure drill bit is correct size, sharp, and has drill points ground, as shown in figure 7-17.

(b) Place drill in center-punched mark. When using a power drill, rotate bit a few turns before starting motor.

(c) While drilling, always hold drill at a 90-degree angle to work.

(d) Avoid excessive pressure. Let drill bit do cutting.

(e) Never push drill through stock.

(f) Remove all burrs with a metal countersink or a file.

(g) Clean away all drill chips.

(4) Countersinking. When using countersunk rivets, it is necessary to make a conical recess in the skin for the head. The type of countersink required depends upon the relation of the thickness of the sheets to the depth of the rivet head. Use the proper degree and diameter countersink and cut only deep enough so the rivet head and metal will form a flush surface, as shown in figure 7-18. Figure 7-19 shows examples of preferable, acceptable, and unsatisfactory countersinking. In the example on the left, the material is quite thick and the head of the countersunk rivet extends only about halfway through the upper layer of metal. Countersinking will leave plenty of material for gripping, but buckling of the material is possible. In the middle example, the countersunk head reaches completely through the upper layer. This condition is allowed, but not recommended. In the example at the right, the head extends well into the second layer of material. This indicates that the material is thin and that most of it would be ground away by drill countersinking; therefore, countersinking is not acceptable and dimpling is preferred. Dimpling will work best if the material is not more than 0.040 inch thick.

(a) Machine countersinking. A machine countersink is similar to a large drill but instead of a point, it has a guide corresponding to the size of a rivet hole. The guide is inserted in the pilot hole and turned with a power or hand drill, thus cutting the countersink. The minimum sheet thickness for machine countersinking 78-degree and 100-degree rivets is subject to the following limitations:

Rivet Size (inch)	3/32	1/8	5/32	3/16	1/4
Gauge (inch)	0.040	0.050	0.084	0.072	0.072

(b) Subcountersinking. Subcountersinking is a process where the inner structure or skin is machine countersunk and the top sheet is dimpled or coin dimpled. Minimum sheet thickness for machine subcountersinking rivets is subject to the following limitations:

Rivet Size (inch)	3/32	1/8	5/32	3/16	1/4
Gauge (inch)	0.040	0.084	0.072	0.072	0.072

Table 7-4. Drill Sizes for Various Diameter Rivets

Rivet diameter (inch)	Drill size	Drill diameter (inch)
1/16	No. 51	0.0670
3/32	No. 41	0.0960
1/8	No. 30	0.1285
5/32	No. 21	0.1590
3/16	No. 11	0.1910
1/4	No. F	0.2570
5/16	No. P	0.3230
3/8	No. W	0.3860

Table 7-5. Sizes of Twist Drills with Decimal Equivalents

Drill size	Decimal equiv (inch)	Drill size	Decimal equiv (inch)	Drill size	Decimal equiv (inch)	Drill size	Decimal equiv (inch)
1/2	0.5000	O	0.3160	3	0.2130	5/32	0.1562
31/64	0.4844	5/16	0.3125	4	0.2092	23	0.1540
15/32	0.4687	N	0.3020	5	0.2055	24	0.1520
29/64	0.4531	19/64	0.2969	6	0.2040	25	0.1495
7/16	0.4375	M	0.2950	13/64	0.2031	26	0.1470
27/64	0.4210	L	0.2900	7	0.2010	27	0.1440
Z	0.4130	9/32	0.2812	8	0.1990	9/64	0.1406
13/32	0.4062	K	0.2810	9	0.1960	28	0.1405
Y	0.4040	J	0.2770	10	0.1935	29	0.1360
X	0.3970	I	0.2720	11	0.1910	30	0.1285
25/64	0.3906	H	0.2660	12	0.1890	1/8	0.1250
W	0.3860	17/64	0.2656	3/16	0.1875	31	0.1200
V	0.3770	G	0.2610	13	0.1850	32	0.1160
3/8	0.3750	F	0.2570	14	0.1820	33	0.1130
U	0.3680	1/4	0.2500	15	0.1800	34	0.1110
23/64	0.3594	D	0.2460	16	0.1770	35	0.1100
T	0.3580	C	0.2420	17	0.1730	7/64	0.1094
S	0.3480	B	0.2380	11/64	0.1719	36	0.1065
11/32	0.3437	15/64	0.2344	18	0.1695	37	0.1040

Table 7-5. Sizes of Twist Drills with Decimal Equivalents - CONT

Drill size	Decimal equiv (inch)	Drill size	Decimal equiv (Inch)	Drill size	Decimal equiv (inch)	Drill size	Decimal equiv (inch)
R	0.3390	A	0.2340	19	0.1660	38	0.1050
Q	0.3320	1	0.2280	20	0.1610	39	0.0995
21/64	0.3281	2	0.2210	21	0.1590	40	0.0980
P	0.3230	7/32	0.2187	22	0.1570	41	0.0960
3/32	0.0937	52	0.0635	61	0.0390	71	0.0260
42	0.0935	1/16	0.0625	62	0.0380	72	0.0250
43	0.0890	53	0.0595	63	0.0370	73	0.0240
44	0.0860	54	0.0550	64	0.0360	74	0.0225
45	0.0820	55	0.0520	65	0.0350	75	0.0210
46	0.0810	3/64	0.0469	66	0.0330	76	0.0200
47	0.0785	56	0.0465	67	0.0320	77	0.0180
5/64	0.0781	57	0.0430	1/32	0.0313	78	0.0160
48	0.0760	58	0.0420	68	0.0310	1/64	0.0156
49	0.0730	59	0.0410	69	0.0292	79	0.0145
50	0.0700	60	0.0400	70	0.0280	80	0.0135
51	0.0670						

(5) Dimpling. Refer to paragraph 7-4a(5) for a description of dimpling.

(6) Driving rivets. Care must be taken in the handling of rivet tools to avoid injury to the material being riveted. All power riveting is done by upsetting or heading the shank against a bucking bar. Riveting methods are divided into three types: hand method, squeeze method, and pneumatic gun method.

(a) Hand method. Riveting by hand should be done only when power riveting is not possible because of lack of equipment or problems of location.

1 Hold bucking bar and rivet set square to work at all times.

2 Use as few strokes of hammer as possible to effect a good job.

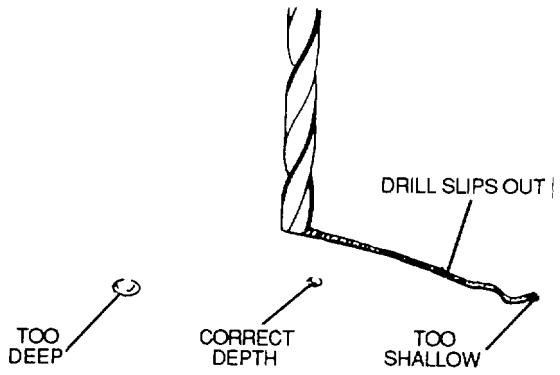

Figure 7-16. Center Punch for Drilling

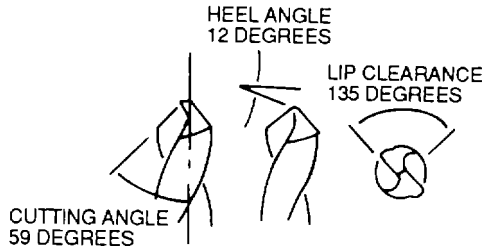

Figure 7-17. Drill Bit Dimensions

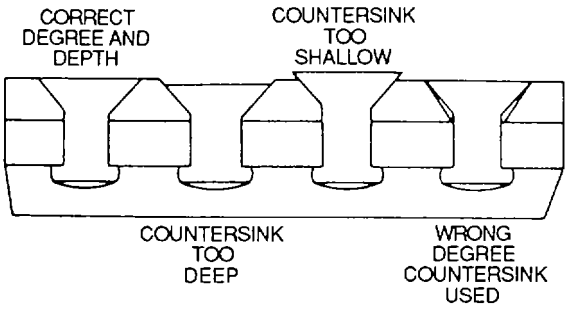

Figure 7-18. Countersinking

Figure 7-19. Countersinking Practices

3 Accomplish flush riveting by bucking shank of a countersunk head rivet and driving on the head. It is preferable, however, that a raised head rivet be installed and the shank upset into the countersink.

(b) Squeeze method. The use of the squeeze method of riveting is limited since it can only be used over the edges of sheets where conditions permit. Riveting with a squeezer is a quick method and requires only one man. Rivet squeezers are of two types, hand and pneumatic, as discussed in paragraph 7-4b(2).

1 Place stationary jaw of squeezer on head of rivet to serve as a bucking bar.

2 Using movable jaw, upset shank.

(c) Pneumatic gun method. In pneumatic riveting, the pressure for bucking the rivet is applied with a rivet set and a pneumatic rivet gun. When using a pneumatic rivet gun, the rivet gun and bucking bar should be held at right angles to the work and enough pressure should be applied to prevent the bucking bar

from jumping off. Figure 7-20 shows typical riveting procedures using a pneumatic rivet gun. If a long row of rivets is to be driven, time can be saved by inserting several rivets in the holes and holding them in place with a strip of masking tape over their heads. The rivet gun may be placed on the rivets without removing the tape. Thus, the tape serves a double purpose: it holds the rivets in place and it forms a cushion to prevent the rivet set from damaging the material.

(7) Recommended bucking bar weights. Selection of the right bucking bar is one of the most important factors in bucking rivets. If the bar does not have the correct shape, it will deform the rivet head. If it is too light, it will not provide the necessary bucking weight and the material may become bulged toward the shop head. If the bar is too heavy, the weight on the bucking force may cause the material to bulge away from the shop head. Table 7-6 shows the bucking bar weights recommended for use with various sizes of rivets.

7-5. Rivet Inspection. There is a need to inspect rivets immediately after driving, and during use installed on an aircraft.

a. Correctly and Incorrectly Driven Rivets. Correctly and incorrectly driven rivets are shown in figure 7-21.

b. Rivet Failure. Generally, the design of riveted joints is based on the theory that the total joint strength is the sum of the individual strengths of a group of rivets. It is then obvious that, if any one rivet fails, its load must immediately be carried by others of the group; if they are unable to carry this added load, progressive joint failure then occurs. Stress concentrations will usually cause one rivet to fail first. Careful analysis of such a rivet in a joint will indicate that it has been too highly loaded, with the possibility that neighboring rivets may have partially failed. Underload rivets are subject to three types of failures shear, bearing, and head.

(1) Shear failure. Shear failure is perhaps the most common of rivet failures. It is a breakdown of the rivet shank by forces acting along the plane of two adjacent sheets, causing a slipping action which may be severe enough to break the rivet shank in two. If the shank becomes loaded beyond the yield point of the material and remains overloaded, a permanent shift is established in the sheets and the rivet shank may become joggled.

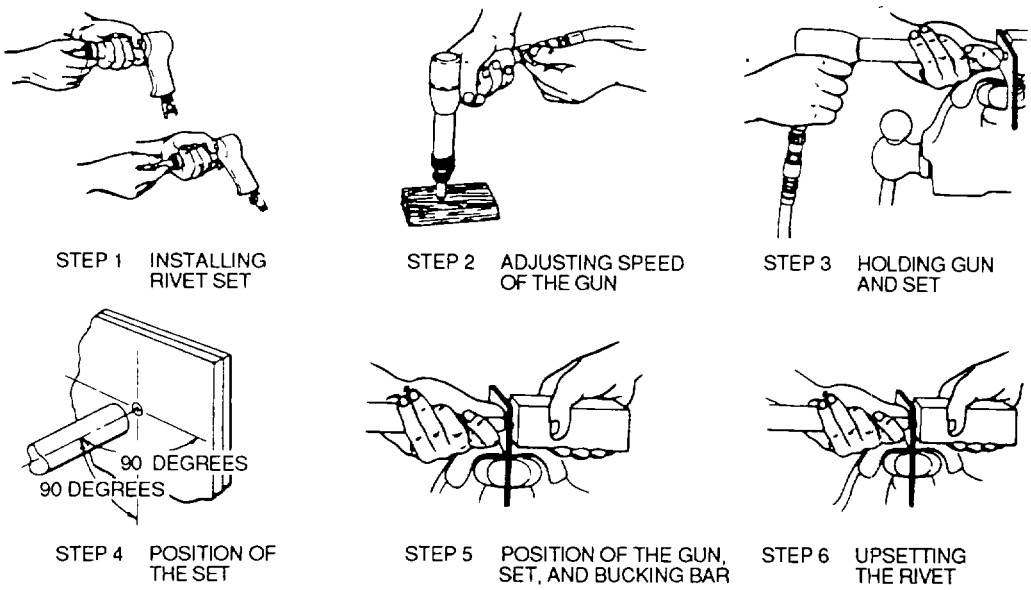

Figure 7-20. Riveting Procedures Using a Pneumatic Rivet Gun

Table 7-6. Recommended Bucking Bar Weights

Rivet Diameter (inch)	Approximate weight (pounds)
3/32	2 to 3
1/8	3 to 4
5/32	3 to 4 1/2
3/16	4 to 5
1/4	5 to 6 1/2

(2) Bearing failure. If the rivet is excessively strong in shear, bearing failure occurs in the sheet at the edge of the rivet hole. The application of large rivets in thin sheets brings about such a failure. In that case, the sheet is locally crushed or buckled, and the buckling destroys the rigidity of the joint. Vibrations, set up by the engine operation or by air currents in flight, may cause the buckled portion to flutter and the material to break off close to the rivet head. If buckling occurs at the end of the sheet, a tearout may result. In either case, replacement of the sheet is necessary.

(3) Head failure. Head failure may result from complex loading occurring at a joint, causing stresses of tension to be applied to the rivet head. The head may fail by shearing through the area corresponding to the rivet shank or, in thicker sheets, may fail through a prying action which causes failure of the head Itself. Any visible head distortion is cause for replacement.

c. Rivet Inspection Procedures. Inspection consists of examining both the shop and manufactured heads and the surrounding skin and structural parts for deformities.

(1) Inspection of neighboring rivets. During the repair of an aircraft structural part, examine adjacent parts to determine the condition of neighboring rivets. The presence of chipped or cracked paint around the heads may indicate shifted or loose rivets. If the heads are tipped or if rivets are loose, they will show up in groups of several consecutive rivets and will probably be tipped in the same direction. If heads which appear to be tipped are not in groups and are not tipped in the same direction, tipping may have occurred during some previous installation.

(2) Critical loading. Inspect rivets which are known to have been critically loaded, but which show no visible distortion, by drilling off the head and carefully punching out the shank. If upon examination the shank appears joggled and the holes in the sheet misaligned, the rivet has failed in shear. In that case, determine what is causing the stress and take necessary corrective action. Countersunk rivets that show head slippage within the countersink or dimple, indicating either sheet bearing failure or rivet shear failure, must be replaced.

(3) Joggles. Joggles in removed rivet shanks indicate partial shear failure. Replace these rivets with the next larger size. Also, if the rivet holes show elongation, replace the rivets with the next larger size. Sheet failures (such as tearouts, cracks between rivets, and the like) usually indicate damaged rivets, and the complete repair of the joint may require replacement of the rivets with the next larger size.

(4) Fretting corrosion. The presence of a black residue around the rivets is not an indication of looseness. The residue, which is aluminum oxide, is formed by a small amount of relative motion between the rivet and the adjacent surface. This is called fretting corrosion. If a rivet is suspected of being defective, this residue may be removed with Scotch Brite and the surface inspected for signs of pitting or cracking. Although the condition indicates that the component is under significant stress, it will not necessarily precipitate cracking.

(5) Airframe cracking. Airframe cracking is not necessarily caused by defective rivets. It is common practice in the industry to size rivet patterns assuming one or more of the rivets is not effective. This means that a loose rivet would not necessarily overload adjacent rivets to the point of cracking.

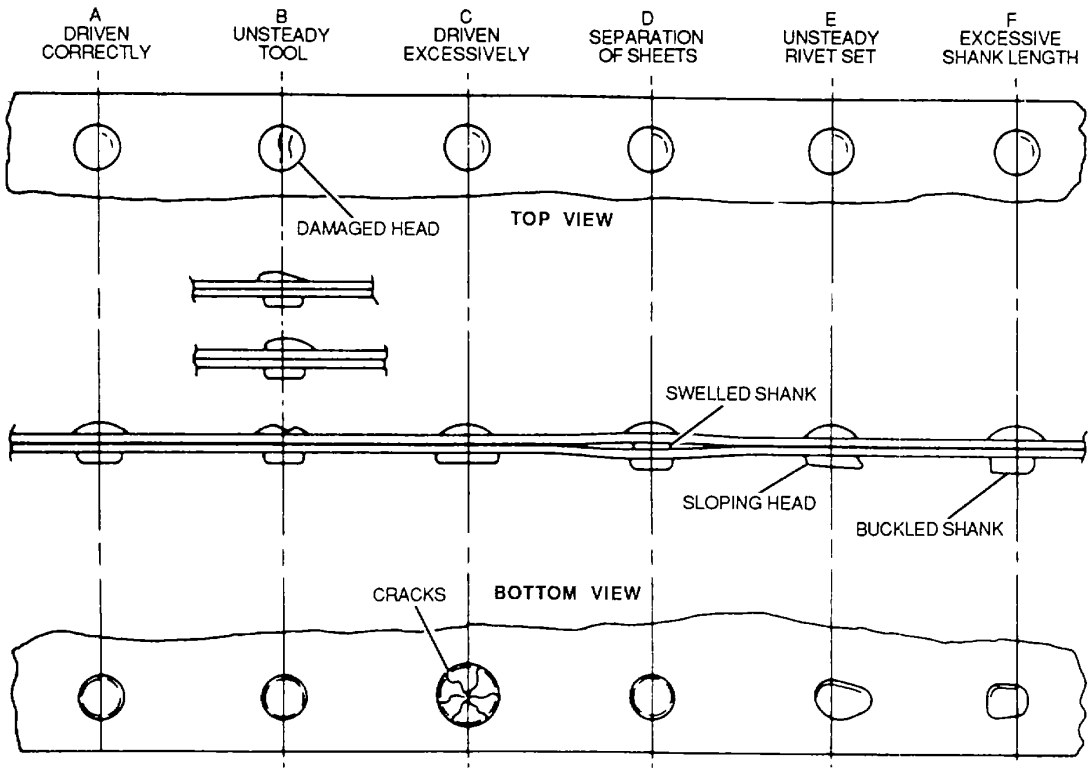

IMPERFECTION		CAUSE	REMEDY	ACTION
A	NONE	NONE	NONE	NONE
B	CUT HEAD	IMPROPERLY HELD TOOLS	HOLD RIVETING TOOLS FIRMLY AGAINST WORK	REPLACE RIVET
C	EXCESSIVELY FLAT HEAD, RESULTANT HEAD CRACKS	EXCESSIVE DRIVING, TOO MUCH PRESSURE ON BUCKING BAR	IMPROVE RIVETING TECHNIQUE	REPLACE RIVET
D	SHEET SEPARATION	WORK NOT HELD FIRMLY TOGETHER AND RIVET SHANK SWELLED	FASTEN WORK FIRMLY TOGETHER TO PRE-VENT SLIPPING	REPLACE RIVET
E	SLOPING HEAD	A. BUCKING BAR NOT HELD FIRMLY B. BUCKING BAR PERMITTED TO SLIDE AND BOUNCE OVER THE RIVET	HOLD BUCKING BAR FIRMLY WITHOUT TOO MUCH PRESSURE	REPLACE RIVET
F	BUCKLED SHANK	IMPROPER RIVET LENGTH, AND E ABOVE	E ABOVE AND RIVET OF PROPER LENGTH	REPLACE RIVET

Figure 7-21. Correctly and Incorrectly Driven Rivets

(6) Rivet head cracking. Figure 7-22 shows acceptable and unacceptable cracks in rivet heads. Cracked heads are acceptable under the following conditions:

- The depth of the crack is less than 1/8 of the shank diameter.
- The width of the crack is less than 1/16 of the shank diameter.
- The length of the crack is confined to an area on the head within a circle having a maximum diameter of 1-1/4 times the shank diameter.
- Cracks should not intersect, which creates the potential for the loss of a portion of a head.

A rivet exceeding any of these limitations will be removed and replaced.

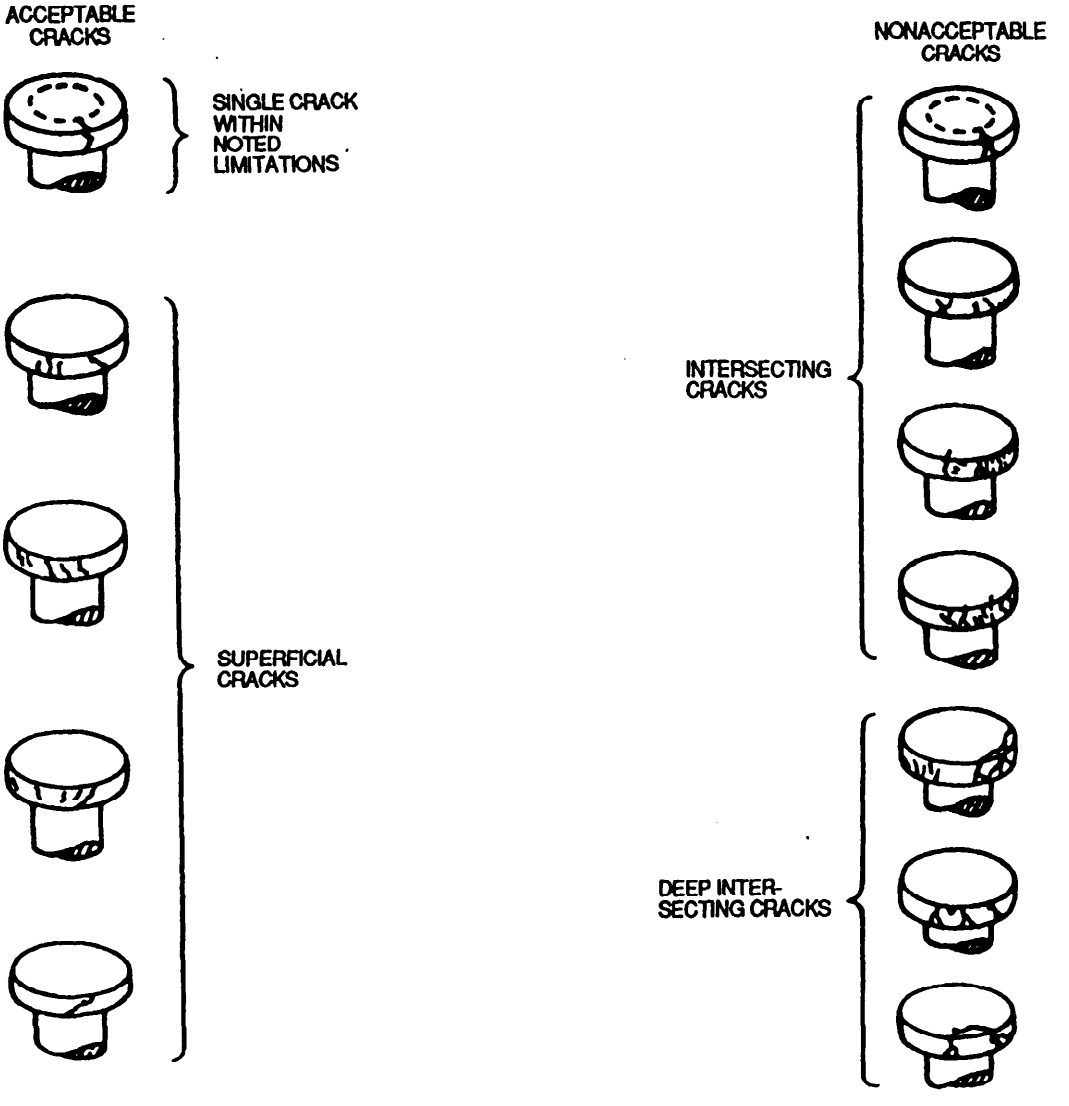

Figure 7-22. Rivet Head Cracking

(7) Head deformities. Figure 7-23 shows the dimensions and acceptability limits of the various deformations of rivet heads occurring during driving.

7-6. Rivet Removal. When a rivet has to be replaced, it must be removed carefully so that the rivet hole will retain its original size and shape and the rivet will not need to be replaced with one of the next larger size. If the rivet is not removed properly, the strength of the joint may be weakened. Hand tools, power tools, or a combination of both may be used to remove rivets.

a. Protruding-Head Rivet Removal. Protruding head rivets may be removed using the following procedures and figure 7-24:

(1) File a flat area on the head of the rivet, and center punch the flat surface.

NOTE

On thin metal, back up the rivet on the upset head when center punching to avoid depressing the metal.

(2) Use a drill one size smaller than the rivet shank to drill through the head. Do not drill too deep, as the rivet shank will then turn with the drill and tear the surrounding metal.

(3) Insert a drift punch diagonally into the hole and knock the head off by lightly striking the drift punch.

(4) Drive the remaining rivet shank out with a drift punch slightly smaller than the shank diameter. On thin metal or unsupported structures, support the sheet with a bucking bar while driving out the shank. If the shank is unusually tight after the rivet head is removed, drill the rivet about two-thirds through the thickness of the material and then drive the rest of it out with a drift punch.

b. Countersunk-Head Rivet Removal. If the manufactured head on countersunk rivets is accessible and has been formed over heavy material, such as an extruded member, the head can be drilled through and sheared off as shown in figure 7-25. if the material is thin, the shank must be drilled through and the formed head must then be cut off with diagonal cutting pliers. The rest of the rivet can then be driven out from the inside with a drift punch.

7-7. Self-Plugging Rivets (Friction Lock). These rivets are used when access to one side of the work is impossible. They are constructed in two parts: a rivet head with a hollow shank or sleeve, and a stem that extends through the hollow shank. Two common head styles are available: a protruding head and a loo-degree countersunk head. The stem may have a knob on the upper portion, or it may be serrated, as shown in figure 7-26. The stem is drawn up into the rivet shank and the mandrel portion of stem upsets the shank on the blind side, forming a plug in the hollow center of the rivet. The excess portion of the stem breaks off at a groove due to the continued pulling action of the rivet gun. Materials used are 2117-T4 and 5056-F aluminum alloy. Monel is used for special applications.

a. Identification. See figures 7-27 and 7-28 for dimensions of the protruding head and countersunk head self-plugging rivets. The part numbers consist of a number of designations which are outlined as follows:

MS 20600:		protruding head
MS 20601:		countersunk head
First dash number:		diameter in 1/32 inch
Second dash number:		grip length in 1/16 inch
Material codes:	AD -	aluminum alloy 2117
	B -	aluminum alloy 5056
	M -	Monel
	P -	cadmium-plated
Stem types:	K -	knob stem
	W -	serrated stem

For example, MS20601B5K5 denotes a countersunk-head rivet made of aluminum alloy 5056, 5/32 inch diameter, knob-type stem, and 5/16 inch grip length.

b. Substitution For Common Rivets. Self-plugging rivets (friction lock) should not be used on control surface hinge brackets, wing attachment fittings, landing gear fittings, fixed tail surface attachment fittings, or in other similar heavily stressed locations. These rivets also should not be used in hulls, floats, or tanks where a fluid-tight joint is required. Self-plugging rivets (friction lock) should not be used to replace solid shank rivets unless absolutely necessary. The self-plugging rivet (friction lock), when property installed, may be used to replace 2117-T4 solid shank rivets, size for size. When used to replace 2017-T4 rivets driven in the heat-treated and aged condition, or 2024-T31 solid rivets, the next size self-plugging rivet (friction lock) should be used. In replacement of solid shank rivets, the size of the hole must be checked. If the hole diameter, after removal of the solid shank rivet, exceeds the maximum allowable

hole size, the next larger size self-plugging rivet (friction lock) should be used. Self-plugging rivets (friction lock) shall not be used in a given joint to replace such a considerable number of solid rivets that overstressing of the remaining solid rivets may result. Table 7-7 shows the single shear strength of protruding head, self-plugging rivets (friction lock) when used in sheet thickness equal to, or greater than, those listed. Countersunk head rivets in dimpled sheets develop practically the same shear strength as the protruding head. The rivet holes should be drilled after the sheets are dimpled at the pilot holes. Countersunk rivets in machine countersunk sheets develop considerably lower shear strength. In thin gauge sheets, the single shear strength for both protruding and countersunk heads will vary with the thickness of the sheets.

c. Self-Plugging Rivet Selection. The factors to consider in selecting the correct rivet are the location of the installation, the composition and thickness of the material being riveted, and the desired strength. If the rivet is to be installed on an aerodynamically smooth surface, or if clearance for an assembly is needed, a countersunk head rivet should be used in areas where clearance or smoothness is not a factor, the protruding head rivet may be used. The composition of the rivet depends on the type of material being riveted. Aluminum alloy 2117 rivets can be used on most aluminum alloys. Aluminum alloy 5056 rivets should be used when riveting magnesium. Monel rivets will always be selected for riveting assemblies fabricated from steel. This type of rivet permits broad tolerances of 0.004 to 0.006 inch in the hole sizes. The grip length Is dependent upon the thickness of the material being riveted, with a desired protrusion of 3/64 to 1/8 Inch before riveting.

d. Installation Tools. Both hand tools and pneumatic tools are available for installing these rivets. Figure 7-29 shows examples of these guns and some of the sleeves used for drawing the stems. The user must ensure that the sleeve is the same size as the rivet shank diameter. Pneumatic tools operate at about 90 to 100 psi.

e. Installation Procedures. The following procedures and figure 7-30 will be used to install friction lock rivets.

(1) Select the rivet to be Installed according to paragraph 7-7c.

(2) Use table 7-8 to determine hole size, then drill holes.

(3) Select a gun based on the shank diameter of the rivet. Position the gun on the rivet stem.

(4) Apply pulling force on the rivet stem until it snaps.

(5) If incorrect rivet installation is suspected, apply about 15 pounds of pressure to the remainder of the stem. If the stem fails, the rivet was incorrectly installed, and must be removed and replaced.

(6) Trim the stem flush with the rivet head, using a pair of diagonal pliers ground smooth on the cutting side.

f. Inspection. Since this rivet is often used in blind applications, the head is usually the only part that can be inspected. It should fit snugly against the metal, and its stem should be trimmed flush with the head.

g. Removal Procedures. These rivets are removed in much the same manner as the common, solid shank rivets, except the preliminary step of driving out the rivet stem (see figure 7-31).

(1) Punch out the rivet stem with a pin punch.

(2) Drill out the rivet head, using a drill the size of the rivet shank.

(3) Pry off the weakened rivet head with a pin punch.

(4) Push out the remainder of the rivet shank with a punch. If the shank will not push out, drill the shank, taking care not to enlarge the hole In the material. If the hole should be enlarged, finish-drill for an oversize rivet.

7-8. CherryMAX Rivets. CherryMAX rivets are blind rivets designed for difficult riveting in places where access to only one side of the work is possible. These rivets are installed by one operator using a special gun which exerts a pulling force to form a head on the blind side of the rivet. These rivets consist of four components assembled as a single unit, as shown in figure 7-32.

- A fully serrated fastener stem with break notch, shear ring, and plug section.
- A locking collar that provides a mechanical lock to the stem.

- The fastener sleeve with a locking collar dimple to receive the locking collar.

- The CherryMAX driving anvil, which ensures flush stem breaks and a flush installed collar at all times.

The CherryMAX rivet can be used anywhere a blind rivet is required for repair of Army aircraft. The CherryMAX rivet should not be used to replace solid rivets unless absolutely necessary. If required, properly installed CherryMAX rivets may be used to replace either 2117-T4 or 2017-T4 solid rivets size for size.

a. Identification. Table 7-9 shows the cross reference between CherryMax part numbers and Military Standard part numbers. Table 7-10 provides a breakdown of CherryMax part numbers. Figures 7-33 through 7-36 give detailed specifications for these rivets.

b. Selection. CherryMAX rivets are selected for installation based primarily on grip length and strength, which is based on rivet diameter.

(1) Grip length. The grip range of all CherryMAX rivets is in increments of 1/16 inch, with the ultimate dash number indicating the maximum grip in sixteenths. (Example a -4 grip rivet has a grip range of 3/16 Inch to 1/4 inch). The grip length can be determined by either a gauge or a table.

(a) Gauge. The 269C3 Cherry selector gauge can be used to determine the proper grip length required. Figure 7-37 shows how this gauge is used.

(b) Table. Determine the total thickness of the material to be joined and locate it between the minimum and maximum columns in table 7-11. Then read across to the right to find the grip length.

Table 7-7. Single Shear Strength for Self-Plugging Rivets (Friction Lock)

Rivet diameter	Rivet hole diameter	Sheet thickness	Shear strength (pounds)
1/8	0.129	0.040	387
5/32	0.160	0.050	598
3/16	0.192	0.064	858
7/32	0.220	0.072	1152
1/4	0.257	0.081	1156

Table 7-8. Hole and Drill Sizes for Self-Plugging (Friction Lock) Rivets

Rivet diameter (inch)	Hole size (inch)	Dimension size
1/8	0.129-0.132	30
5/32	0.160-0.164	20
3/16	0.192-0.196	10
1/4	0.256-0.261	F

RIVET DIAMETER IN 32NDS	DIMENSIONS OF FORMED HEAD					
	NOMINAL					
	DIAMETER 1.5D	HEIGHT 0.5D	MAXIMUM DIAMETER 1.333D	MINIMUM HEIGHT 0.666D	MAXIMUM DIAMETER 1.666D	MINIMUM HEIGHT 0.333D
	CONDIITION 1		CONDITION 2		CONDITION 3	
3	0.141	0.047	0.122	0.062	0.157	0.031
4	0.188	0.063	0.163	0.083	0.208	0.042
5	0.234	0.078	0.203	0.104	0.260	0.052
6	0.281	0.094	0.245	0.125	0.312	0.063
8	0.375	0.125	0.325	0.167	0.416	0.083
10	0.469	0.156	0.406	0.208	0.520	0.104
12	0.562	0.188	0.487	0.250	0.625	0.125
LIMITING DEFECT			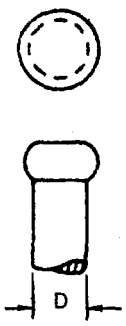			
REMARKS			RIVETS NOT CONFORMING TO THE ABOVE LIMITATIONS CAN BE RESTRUCK ON SHOP HEAD IF HEAD THICKNESS PERMITS. DO NOT RESTRIKE TYPE DD RIVETS.			

Figure 7-23. Rivet Acceptability Limits (Sheet 1 of 5)

RIVET DIAMETER IN 32NDS	CRACKED HEADS	COCKED (BEVELED) HEADS	
		MINIMUM	MAXIMUM
	CONDITION 4	CONDITION 5	
3		0.023	0.070
4		0.031	0.094
5		0.039	0.117
6		0.047	0.141
8		0.063	0.188
10		0.078	0.235
12		0.094	0.281
LIMITING DEFECT	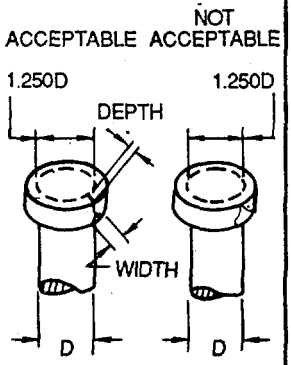	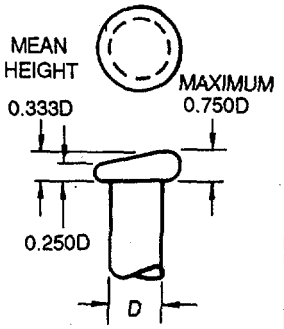	
REMARKS	SEE FIGURE 7-21.	MEAN HEIGHT CAN NOT BE LESS THAN 0.333D.	

Figure 7-23. Rivet Acceptability Limits (Sheet 2 of 5)

CONDITION	CONCENTRIC STEPPED OR TRUNCATED CONICAL HEAD	FLATTENED HEAD	OFFSET HEAD	CONCENTRIC RINGED HEAD	CUT HEAD	STEPPED HEAD
	CONDITION 6	CONDITION 7	CONDITION 8	CONDITION 9	CONDITION 10	CONDITION 11
LIMITING DEFECT					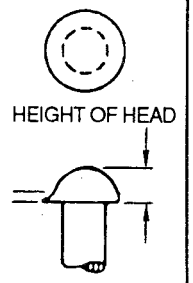	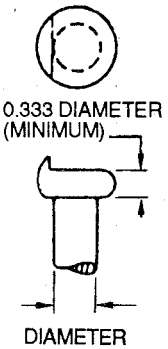
REMARKS	MAY BE USED FOR SHOP HEAD FOR RIVET DIAMETER 0.187 AND GREATER.	THE USE OF A FLAT SET IS PERMITTED ON THE MANUFACTURED HEAD.	THE HEAD MAY BE TANGENT TO THE SHANK. NOT ACCEPTABLE IF THE HOLE SHOWS OR FOR USE IN SECTIONS OF INTEGRAL TANKS.	NOT ACCEPTABLE. PROBABLY CAUSED BY THE USE OF A SMALL RIVET SET.	MAXIMUM DEPTH IS ONE-FOURTH HEIGHT OF HEAD.	STEPPED PART OF HEAD TO BE NOT LESS THAN ALLOWABLE MIIMIMUM HEAD THICKNESS. NOT NECESSARY TO CHIP OR FILE THE HIGH PART.

Figure 7-23. Rivet Acceptability Limits (Sheet 3 of 5)

CONDITION	INCOMPLETELY DRIVEN (OPEN) HEAD	OPEN HEAD (TILTED)	SWELLED RIVET (SHEET BUCKLED AT RIVET)	
			INTERNAL GAP	OPEN GAP
	CONDITION 12	CONDITION 13	CONDITION 14	CONDITION 15
LIMITING DEFECT	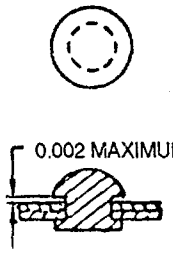	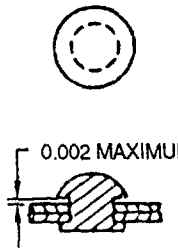	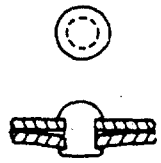	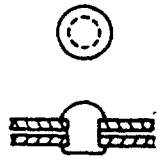
REMARKS	NOT ACCEPTABLE IF RIVET IS LOOSE OR IF A 0.002 FEELER GAUGE CAN BE INSERTED TO SHANK. RIVET MAY BE RESTRUCK TO REDUCE CLEARANCE. NOT ACCEPTABLE FOR USE IN SECTIONS OF INTEGRAL TANKS. DO NOT RESTRIKE TYPE DD RIVETS.		ACCEPTABLE IF CASE IS ISOLATED. LIMITED TO NOT MORE THAN THREE NONCONSECUTIVE RIVETS IN A ROW OF TEN RIVETS.	RESTRIKE IF A 0.003 FEELER GAUGE CAN BE INSERTED TO SHANK. IF THIS DOES NOT CORRECT, REMOVE RIVET AND CLEAN OUT CHIPS. MAXIMUM EDGE GAP 0.015. OPEN GAP NOT ACCEPTABLE IN INTEGRAL TANK SECTIONS. DO NOT RESTRIKE TYPE DD RIVETS.

Figure 7-23. Rivet Acceptability Limits (Sheet 4 of 5)

CONDITION	OPEN COUNTERSUNK RIVET	PARTIALLY OPEN COUNTERSUNK RIVET	PROJECTING HEAD COUNTERSUNK RIVET	DEPRESSED HEAD COUNTERSUNK OR DIMPLED RIVET
	CONDITION 16	CONDITION 17	CONDITION 18	CONDITION 19
LIMITING DEFECT	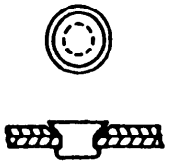	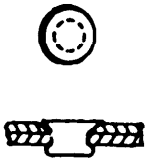		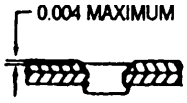
REMARKS	NOT ACCEPTABLE. IF SKIN THICKNESS PERMITS, REMOVE RIVET AND COUNTERSINK FOR NEXT LARGER DIAMETER. IF APPROVED EQUIPMENT IS AVAILABLE, THE SHOP HEAD MAY BE FORMED IN THE COUNTERSINK AND ANY PROJECTION SHAVED FLUSH.		TYPICAL MAXIMUM TOLERANCES 0.004. SPECIFIC TOLERANCES ARE DEPENDENT UPON LOCATIONS.	REPLACE RIVET IF HEAD IS MORE THAN 0.004 BELOW SURFACE. IF MACHINE COUNTERSUNK AND SKIN THICKNESS PERMITS, REPLACE WITH NEXT LARGER DIAMETER RIVET. THE REPLACEMENT RIVETS MAY HAVE THE SHOP HEAD FORMED IN THE COUNTERSINK.

Figure 7-23. Rivet Acceptability Limits (Sheet 5 of 5)

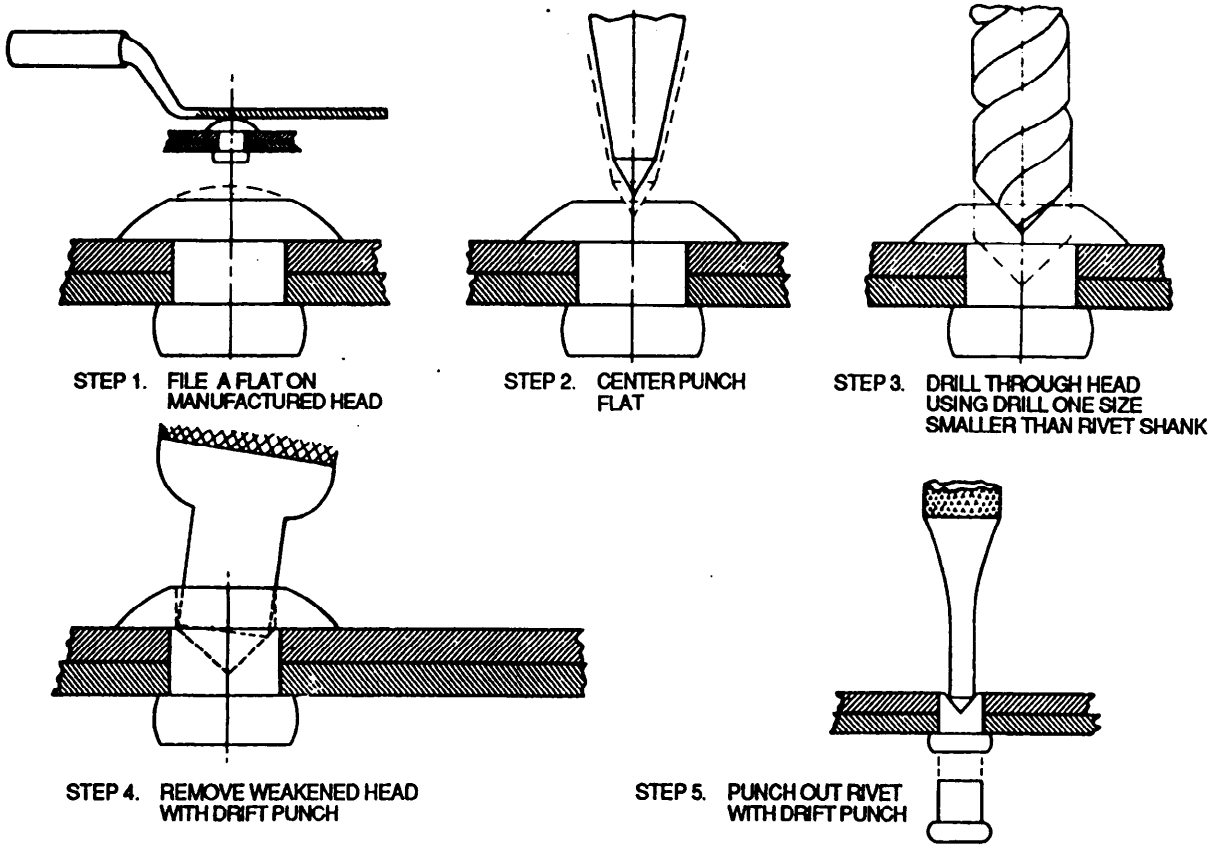

Figure 7-24. Removal of Protruding Head Rivets

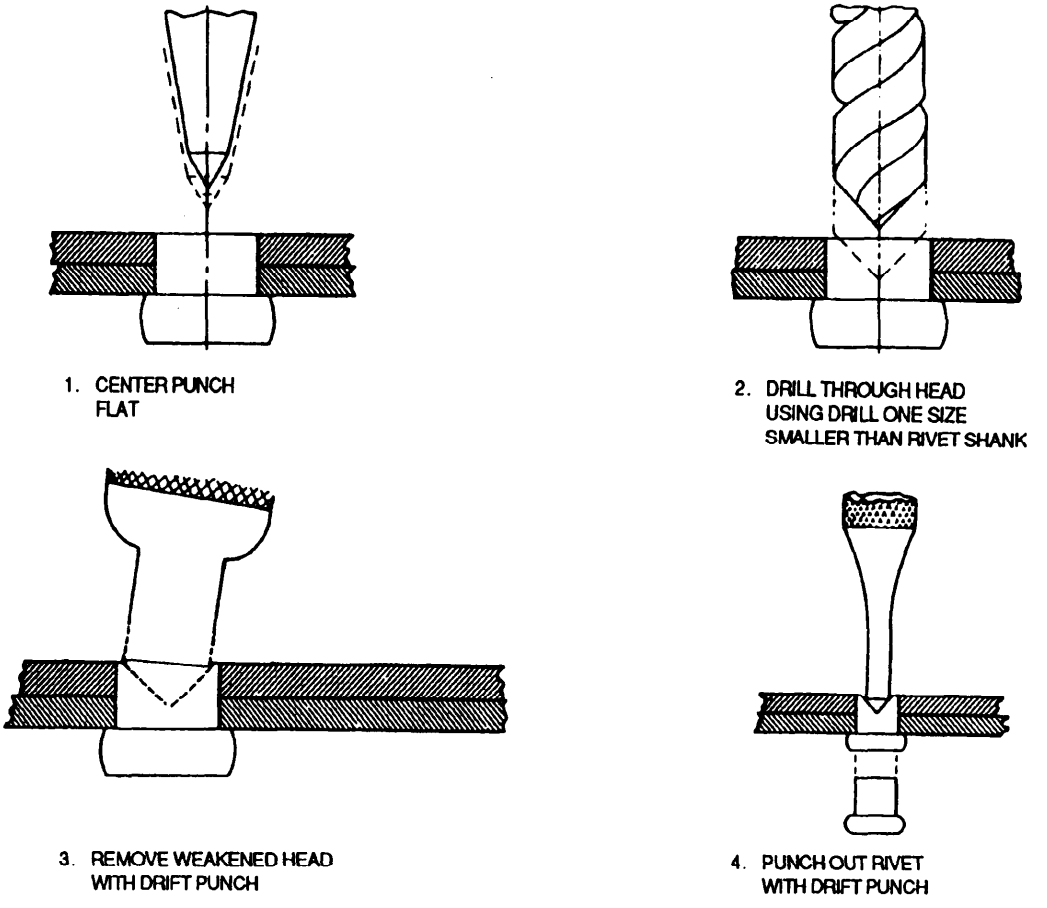

Figure 7-25. Removal of Countersunk Head Rivet

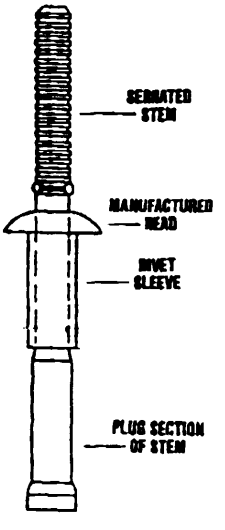

Figure 7-26. Self-Plugging Rivet Stem Features

(2) Strength. Minimum rivet shear and tensile strength in steel coupons for Monel and aluminum are shown in table 7-12.

(3) Allowable joint strength. CherryMAX rivets may be substituted for aluminum solid rivets in most applications. Table 7-13 includes aluminum solid rivet figures for quick comparison.

c. CherryMAX Tooling, The following paragraphs discuss the various equipment used for installing CherryMAX rivets.

(1) G-27 Hand riveter. This riveter, shown in figure 7-38, is a lightweight (13 ounce) tool for use in low production applications such as repair, maintenance, or prototype work. This tool will install all 1/8 inch diameter aluminum CherryMAX rivets.

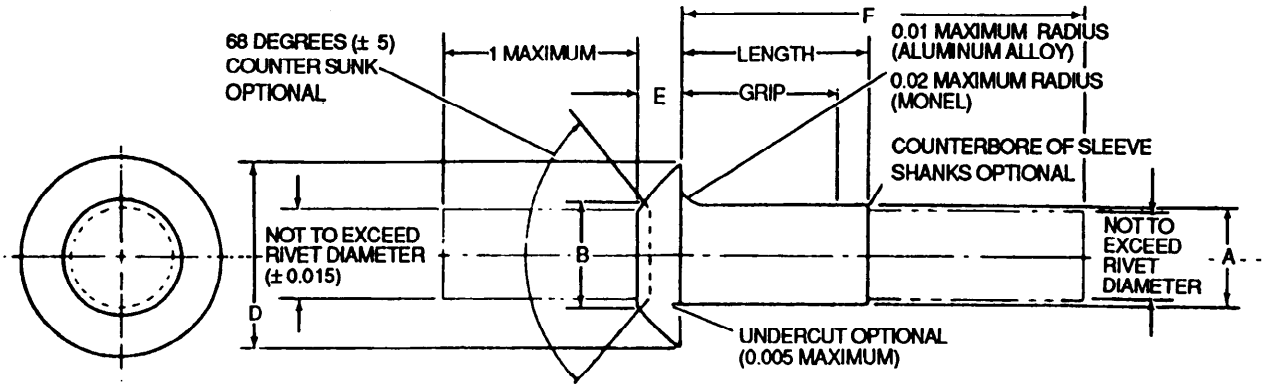

1/8 RIVET DIAMETER, NOMINAL				5/32 RIVET DIAMETER, NOMINAL			
GRIP RANGE		LENGTH MAXIMUM	F MAXIMUM	GRIP RANGE		LENGTH MAXIMUM	F MAXIMUM
MINIMUM	MAXIMUM			MINIMUM	MAXIMUM		
UP TO	0.062	0.170	0.500	UP TO	0.062	0.192	0.558
0.063	0.125	0.232	0.600	0.063	0.125	0.254	0.620
0.126	0.187	0.295	0.750	0.126	0.187	0.317	0.808
0.188	0.250	0.357	0.850	0.188	0.250	0.379	0.870
0.251	0.312	0.420	1.010	0.251	0.312	0.441	1.058
0.313	0.375	0.482	1.100	0.313	0.375	0.503	1.120
				0.376	0.437	0.567	1.339
				0.438	0.500	0.629	1.401

Figure 7-27. MS 20600 Protruding-Head Rivet Identification (Sheet 1 of 2)

3/16 RIVET DIAMETER, NOMINAL				1/4 RIVET DIAMETER, NOMINAL			
GRIP RANGE		LENGTH MAXIMUM	F MAXIMUM	GRIP RANGE		LENGTH MAXIMUM	F MAXIMUM
MINIMUM	MAXIMUM			MINIMUM	MAXIMUM		
UP TO	0.062	0.215	0.638	0.125	0.187	0.385	0.970
0.063	0.125	0.277	0.700	0.188	0.250	0.447	1.090
0.126	0.187	0.340	0.888	0.251	0.312	0.510	1.220
0.188	0.250	0.402	0.950	0.313	0.375	0.572	1.340
0.251	0.312	0.465	1.138	0.376	0.437	0.635	1.470
0.313	0.375	0.527	1.200	0.438	0.500	0.697	1.590
0.376	0.437	0.590	1.419	0.501	0.562	0.760	1.720
0.438	0.500	0.652	1.481	0.563	0.625	0.832	1.840
0.501	0.562	0.715	1.637	0.626	0.687	0.885	1.970
0.563	0.625	0.777	1.699	0.688	0.750	0.947	2.090
0.626	0.687	0.840	1.887	0.751	0.812	1.010	2.220
0.688	0.750	0.902	1.949	0.813	0.875	1.072	2.340

RIVET SIZE NOMINAL DIAMETER	A +0.003 -0.001 DIAMETER	UNIVERSAL HEAD		B MAXIMUM
		D DIAMETER	E +0.010 -0.000	
1/8	0.125	0.250(±0.012)	0.054	0.110
5/32	0.156	0.312(±0.016)	0.067	0.138
3/16	0.187	0.375(±0.019)	0.080	0.161
1/4	0.250	0.500(±0.025)	0.107	0.215

Figure 7-27. MS 20600 Protruding-Head Rivet Identification (Sheet 2 of 2)

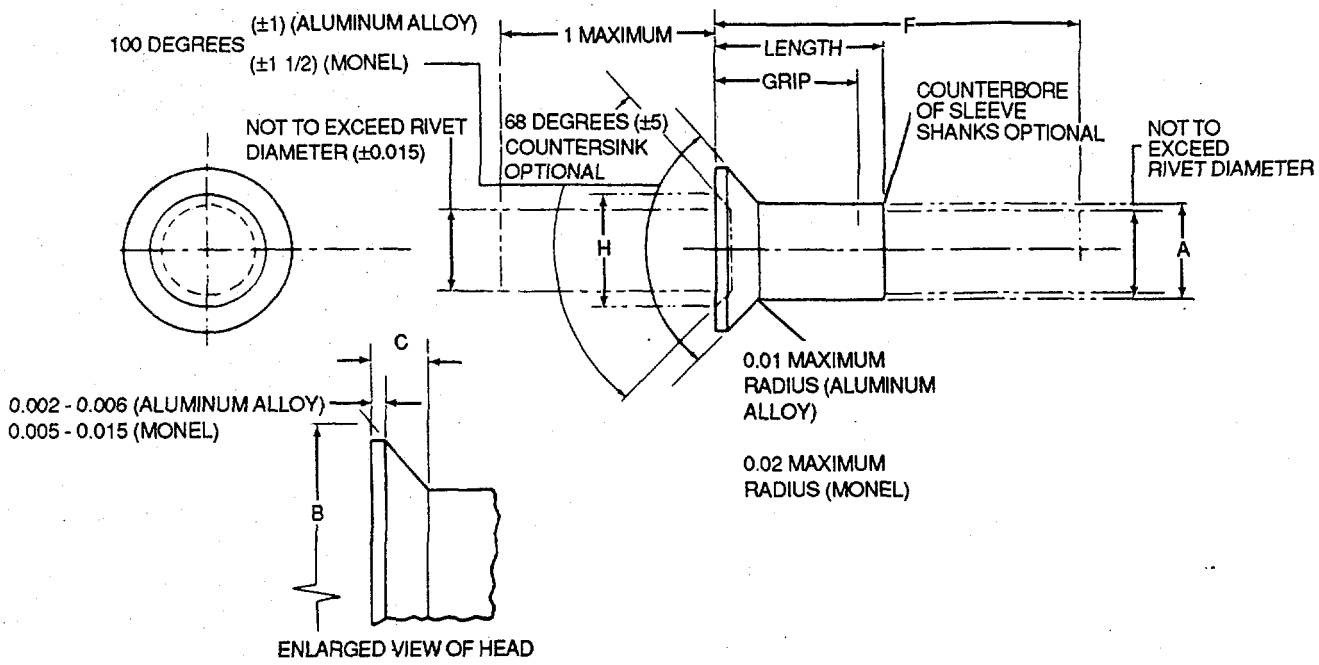

RIVET SIZE NOMINAL DIAMETER	A +0.003 -0.001 DIAMETER	B ±0.004 DIAMETER	C	H MAXIMUM
1/8	0.125	0.225	0.042	0.110
5/32	0.156	0.286	0.055	0.138
3/16	0.187	0.353	0.070	0.151
1/4	0.250	0.476	0.095	0.215

Figure 7-28. MS 20601 Countersunk-Head Rivet Identification (Sheet 1 of 2)

3/32 RIVET DIAMETER, NOMINAL				1/8 RIVET DIAMETER, NOMINAL			
GRIP RANGE		LENGTH MAXIMUM	F MAXIMUM	GRIP RANGE		LENGTH MAXIMUM	F MAXIMUM
MINIMUM	MAXIMUM			MINIMUM	MAXIMUM		
0.065	0.125	0.254	0.620	UP TO	0.062	0.170	0.500
0.126	0.187	0.317	0.808	0.063	0.125	0.232	0.562
0.188	0.250	0.379	0.870	0.126	0.187	0.295	0.750
0.251	0.312	0.441	1.058	0.188	0.250	0.357	0.812
0.313	0.375	0.503	1.120	0.251	0.312	0.420	1.010
0.376	0.437	0.567	1.339	0.313	0.375	0.482	1.072
0.438	0.500	0.629	1.401				

3/16 RIVET DIAMETER, NOMINAL				1/4 RIVET DIAMETER, NOMINAL			
GRIP RANGE		LENGTH MAXIMUM	F MAXIMUM	GRIP RANGE		LENGTH MAXIMUM	F MAXIMUM
MINIMUM	MAXIMUM			MINIMUM	MAXIMUM		
0.080	0.125	0.277	0.700	0.125	0.187	0.385	0.968
0.126	0.187	0.340	0.888	0.188	0.250	0.447	1.030
0.188	0.250	0.402	0.950	0.251	0.312	0.510	1.218
0.251	0.312	0.465	1.138	0.313	0.375	0.572	1.280
0.313	0.375	0.527	1.200	0.376	0.437	0.635	1.468
0.376	0.437	0.590	1.419	0.438	0.500	0.697	1.530
0.438	0.550	0.652	1.481	0.501	0.562	0.760	1.718
0.501	0.562	0.715	1.637	0.563	0.625	0.822	1.780
0.563	0.625	0.777	1.699	0.626	0.687	0.885	1.968
0.626	0.687	0.840	1.887	0.688	0.750	0.947	2.030
0.688	0.750	0.902	1.949	0.751	0.812	1.010	2.218
				0.813	0.875	1.072	

Figure 7-28. MS 20601 Countersunk-Head Rivet Identification (Sheet 2 of 2)

(2) G-749 Hand riveter. This riveter, shown in figure 7-39, is a powerful hydraulic tool designed specifically for efficient installation of CherryMAX rivets where air is not available for power tools. The pulling heads shown in paragraph 7-8c (5) will fit directly on this tool. The G-749 will install all 1/8 - , 5/32 - , and 3/16-inch diameter CherryMAX rivets in all materials, head styles, and grip lengths.

(3) G-701 power riveter. The Cherry G-701 is a pneumatic-hydraulic tool that weighs just over 3-1/2 pounds and can be operated in any position with one hand. It is shown in figure 7-40. It consumes approximately 1.9 cubic feet of air at 20 cycles per minute, and its maximum noise level under load does not exceed 85 decibels. The H701A-456 (straight), H763-456 (offset), and H753-456 (right-angle) pulling heads fit directly on this riveter, which will install all 1/8- and 5/32-inch diameter CherryMAX rivets in all materials, head styles, and grip lengths.

(4) G-704 power riveter. The Cherry G-704, shown in figure 7-41, is a pneumatic-hydraulic tool that weighs just over 4-1/2 pounds and can be operated in any position with one hand. It consumes approximately 3.9 cubic feet of air at 20 cycles per minute, and its maximum noise level under load does not exceed 85 decibels The H701A-456 (straight), H763-456 (offset), and H753-456 (right-angle) pulling heads fit directly on this riveter, which will Install all 1/8, 5/32-, and 3/16-inch

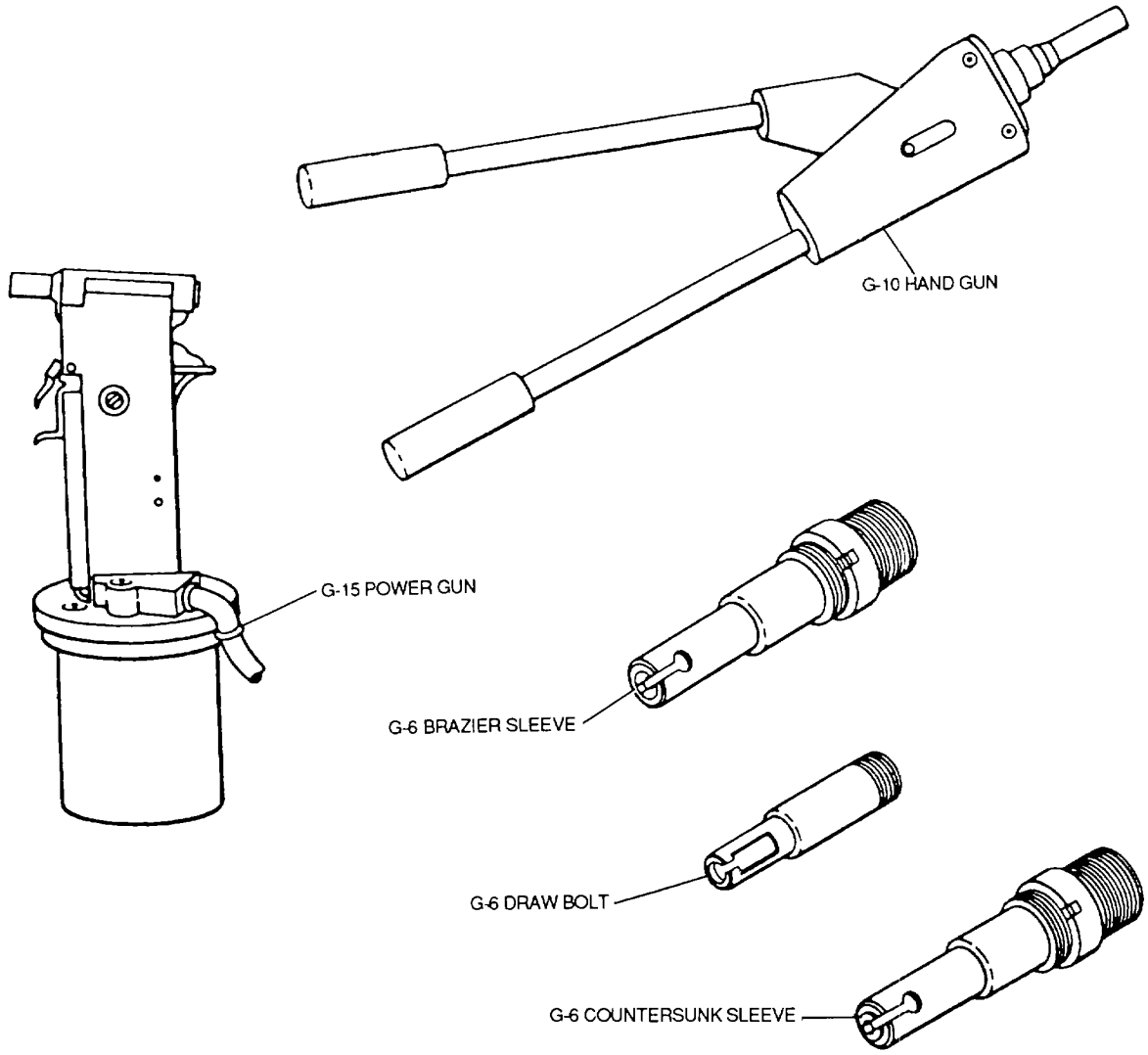

Figure 7-29. Self-Plugging Rivet Installation Tools

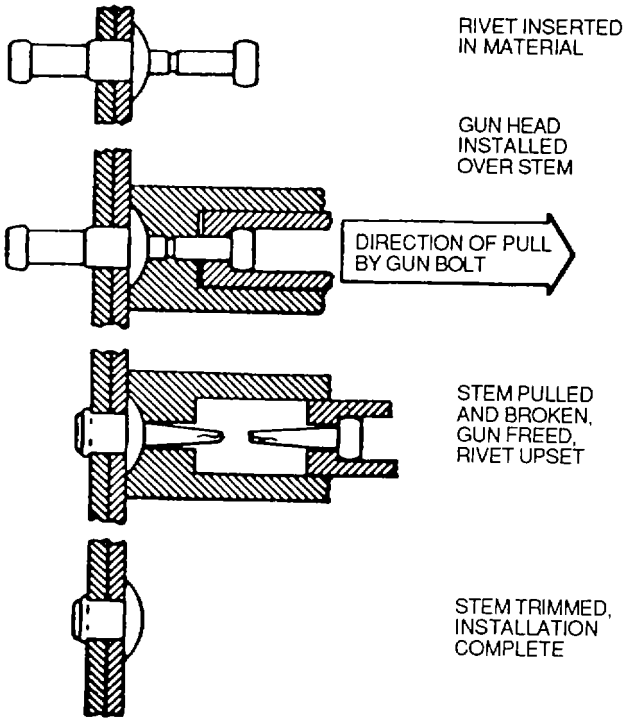

Figure 7-30. Self-Plugging Rivet Installation

diameter CherryMAX rivets in all materials, head styles, and grip lengths.

(5) Pulling heads. Any of the four pulling heads shown In figure 7-42 will install all 1/8-, 5-32-, and 3/16-inch diameter CherryMAX rivets in all materials, head styles, and grip lengths.

(6) Gauges. The gauges commonly used with CherryMAX rivets are the 269C3 grip gauge and the T-172 hole size gauge.

(a) 269C3 Grip gauge. The 269C3 grip gauge is a simple, self-explanatory gauge for determining material thickness and proper rivet grip length. It is shown in figure 7-43.

(b) T- 172 Rivet hole gauge. The T-172 rivet hole gauge, shown in figure 7-44, is a go/no-go gauge used to check holes drilled for CherryMAX rivets. There is a gauge for each applicable hole size for nominal and oversize holes. The gauges are numbered as follows:

RIVET DIAMETER	GAUGE NUMBER
1/8-inch nominal	T-172-4
5/32-inch nominal	T-172-5
3/16-inch nominal	T-172-6
1/8-inch oversize	T-172-400
5/32-inch oversize	T-172-500
3/16-inch oversize	T-172-600

(7) Adapters. Adapters Include devices to allow driving of either type of blind rivets, or to extend the reach of a pulling head.

(a) 704A6 Adapter. The 704A6 adapter fits either the G-701 or G-704 CherryMAX riveter to permit the use of H9040 pulling heads for installation of MS-type blind rivets.

Table 7-9. CherryMAX Cross Reference (Part Number/Military Standard Part Number)

CherryMAX part number	Head style	Diameter series	Sleeve material	Stem material	Military standard part number
CR3213	Protruding	Nominal	Aluminum 5056	Alloy Steel	M7885/2
CR3212	Countersunk	Nominal	Aluminum 5056	Alloy Steel	M7885/3
CR3523	Protruding	Nominal	Monel	15-7 CRES	M7885/4
CR3524	Countersunk	Nominal	Monel	15-7 CRES	M7885/5
CR3243	Protruding	Oversize	Aluminum 5056	Alloy Steel	M7885/6
CR3242	Countersunk	Oversize	Aluminum 5056	Alloy Steel	M7885/7
CR3553	Protruding	Oversize	Monel	15-7 CRES	M7885/8
CR3552	Countersunk	Oversize	Monel	15-7 CRES	M7885/9
CR3223	Protruding	Nominal	Aluminum 5056	15-7 CRES	M7885110
CR3222	Countersunk	Nominal	Aluminum 5056	15-7 CRES	M7885/11
CR3224	NAS1097	Nominal	Aluminum 5056	15-7 CRES	M7885/12
CR3245	Unisink	Oversize	Aluminum 5056	Alloy Steel	M7885/13
CR3255	Unisink	Oversize	Aluminum 5056	15-7 CRES	M7885/14
CR3853	Protruding	Oversize	Inconel 600	Inconel X750	M7885/15
CR3852	Countersunk	Oversize	Inconel 600	Inconel X750	M7885/16

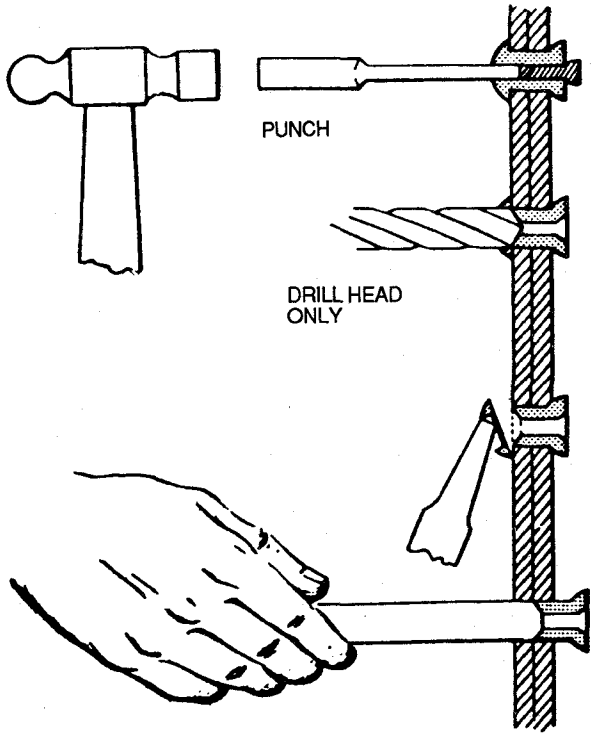

Figure 7-31. Removal of Self-Plugging Rivets

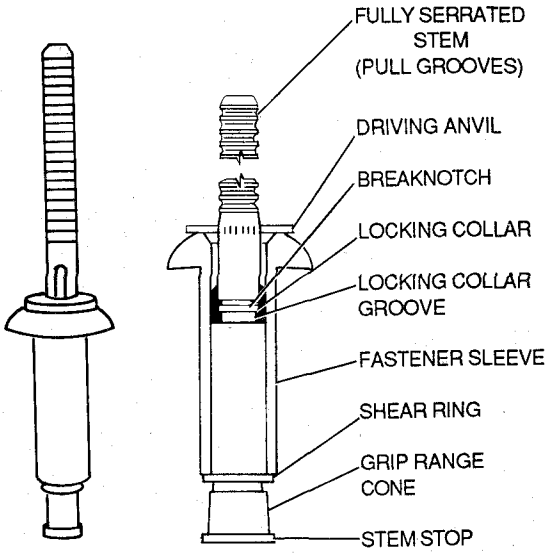

Figure 7-32. CherryMAX Rivet

Table 7-10. CherryMAX Part Number Breakdown

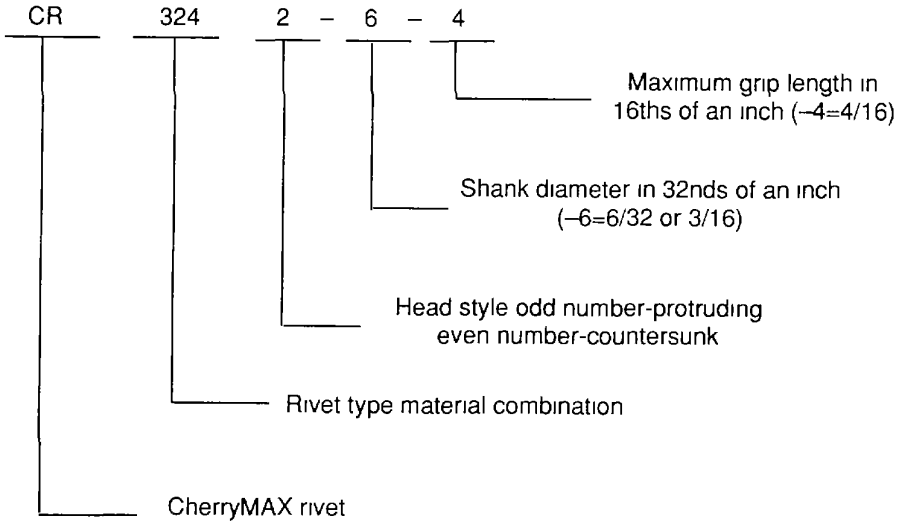

(b) 704A9 Adapter. The 704A9 adapter fits either the G-701 or G-704 CherryMAX riveter to permit the use of H9015 pulling heads for installation of MS type blind rivets.

(c) 704A12 Extensions These help reach many restricted installation areas by increasing the overall length of the pulling head. They fit directly on the G-701, G-704, or G-749 CherryMAX riveter and will accept any of the pulling heads in paragraph 7-8c (5). Four lengths are offered: 704A12-2, which extends the pulling head 2 inches; 704A1 2-4 (4 inches), 704A1 26 (6 inches), and 704A12-12 (12 inches).

(8) Stem catcher bag The 670A20 stem catcher bag shown in figure 7-45 is a convenient accessory that helps eliminate litter on the shop floor. It snaps over the stem deflector of either the G-701 or G-704 riveter to catch the spent rivet stems as they are ejected from the rear of the riveter head.

(9) 700A77 Air bleeder To keep CherryMAX hydraulic tools operating at peak efficiency, it is essential that the hydraulic system be kept full of fluid and free of air. Based on the same principle used In bleeding the hydraulic brake system of an automobile, the 700A77 Cherry air bleeder will quickly and easily remove all air and ensure the complete filling of the tool with hydraulic fluid. It may be used in the tool crib or right on the production line because it requires only a few minutes to perform this vital function The air bleeder is a small item that does a big job: it prevents downtime.

(10) Service kits An assortment of O-rings, seals, screws, washers, and gaskets likely to need replacing over time is available in kit form for each Cherry power tool. To avoid unnecessary downtime, it is advisable to have these kits on hand for the tools being serviced:

RIVETER	SERVICE KIT NUMBER
G-701	G701 KS
G-704	G704 KS

(11) Special assembly tools. To completely dismantle and reassemble Cherry hydraulic tools, it is advisable to use certain special wrenches designed for that purpose. They are shown in figure 7-46. Refer to the service instructions for each tool for their use.

(12) Tool capacity. The tool and pulling head combinations shown in table 7-14 and 7-15 will pull the diameter rivets indicated.

d. CherryMAX Installation. Installation of CherryMAX rivets involves preparation of the hole and Installation of the rivet.

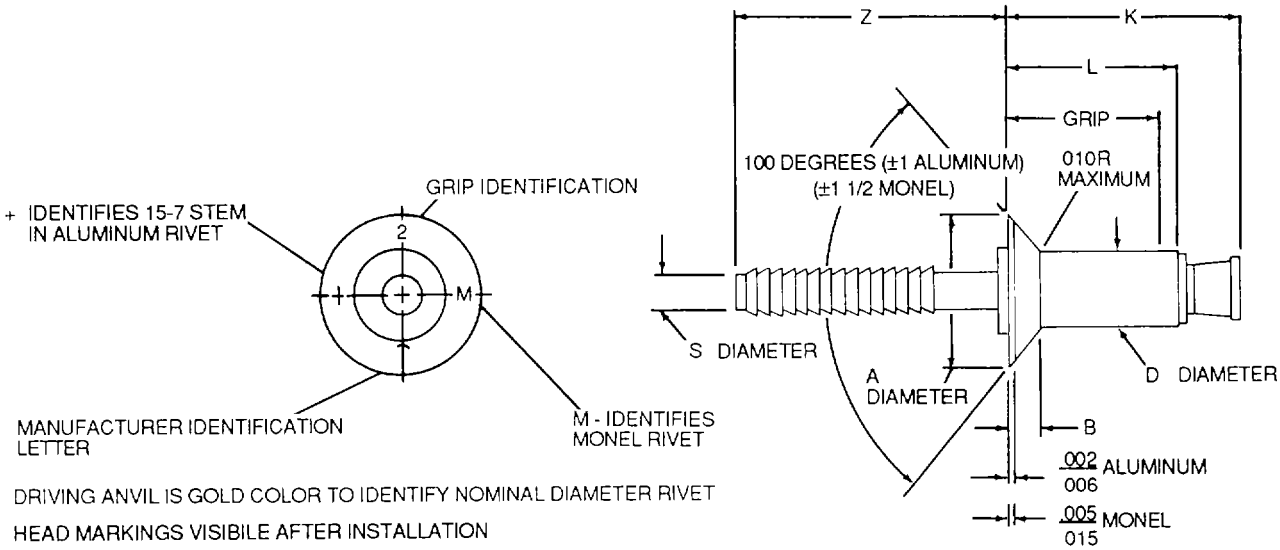

DASH NUMBERS

DIAMETER DASH NO	A (± 004)	B REF	D (+ 003) (- 001)	S REF	Z MIN	HOLE LIMITS
-4	225	042	126	073	87	129- 132
-5	286	055	157	091	94	160- 164
-6	353	070	189	110	94	192- 196

RIVET NUMBER, MATERIAL, AND FINISH DESCRIPTION

RIVET NUMBER	NAS 523 CODE	FINISH			MATERIAL		
		SLEEVE	STEM	LOCKRING	SLEEVE	STEM	LOCKRING
CR 3212	ARM	5056 ALUMINUM ALLOY QQ-A-430	8740 ALLOY STEEL AMS 6322	A-286 CRES AMS 5731	MIL-C-5541 PLAIN COLOR	CAD PLATE QQ-P-416 TYPE II CLASS 2	NONE
CR 3222	—	5056 ALUMINUM ALLOY QQ-A-430	15-7 PH CRES AMS 5657	A-286 CRES AMS 5731	MIL-C-5541 PLAIN COLOR	CAD PLATE QQ-P-416 TYPE I CLASS 2	NONE
CR 3522	—	MONEL QQ-N-281	15-7 PH CRES AMS 5657	A-286 CRES AMS 5731	NONE	DRY FLIM CHERRY SPEC C30	NONE
CR 3522P	—	MONEL QQ-N-281	15-7 PH CRES AMS 5657	A-286 CRES AMS 5731	CAD PLATE QQ-P-416 TYPE II CLASS 2	CAD PLATE QQ-P-416 TYPE I CLASS 2	NONE

Figure 7-33. Countersink Head Nominal Diameter CherryMAX Rivet (Sheet 1 of 2)

RIVET DIAMETERS AND GRIP RANGES

GRIP LIMITS 1/16 RANGE		1/8 DIAMETER		
MINIMUM	MAXIMUM	DASH NO.	L (±.010)	K MAXIMUM
.063	.125	4-2	.224	.45
.126	.187	4-3	.287	.51
.188	.250	4-4	.349	.57
.251	.312	4-5	.412	.63
.313	.375	4-6	.474	.70
.376	.437	4-7	.537	.76
.438	.500	4-8	.599	.82
.501	.562	4-9	.662	.88
.563	.625			
.626	.687			
.688	.750			

GRIP LIMITS 1/16 RANGE		5/32 DIAMETER		
MINIMUM	MAXIMUM	DASH NO.	L (±.010)	K MAXIMUM
.065	.125	5-2	.230	.47
.126	.187	5-3	.293	.53
.188	.250	5-4	.355	.59
.251	.312	5-5	.418	.65
.313	.375	5-6	.480	.72
.376	.437	5-7	.543	.77
.438	.500	5-8	.605	.84
.501	.562	5-9	.668	.90
.563	.625	5-10	.730	.96
.626	.687	5-11	.793	1.02
.688	.750			

GRIP RANGE 1/16 RANGE		3/16 DIAMETER		
MINIMUM	MAXIMUM	DASH NO.	L (±.010)	K MAXIMUM
.080	.125	6-2	.262	.51
.126	.187	6-3	.325	.57
.188	.250	6-4	.387	.64
.251	.312	6-5	.450	.70
.313	.375	6-6	.512	.76
.376	.437	6-7	.575	.82
.438	.500	6-8	.637	.88
.501	.562	6-9	.700	.95
.563	.625	6-10	.762	1.01
.626	.687	6-11	.825	1.07
.688	.750	6-12	.887	1.13

Figure 7-33. Countersunk Head Nominal Diameter CherryMAX Rivet (Sheet 2 of 2)

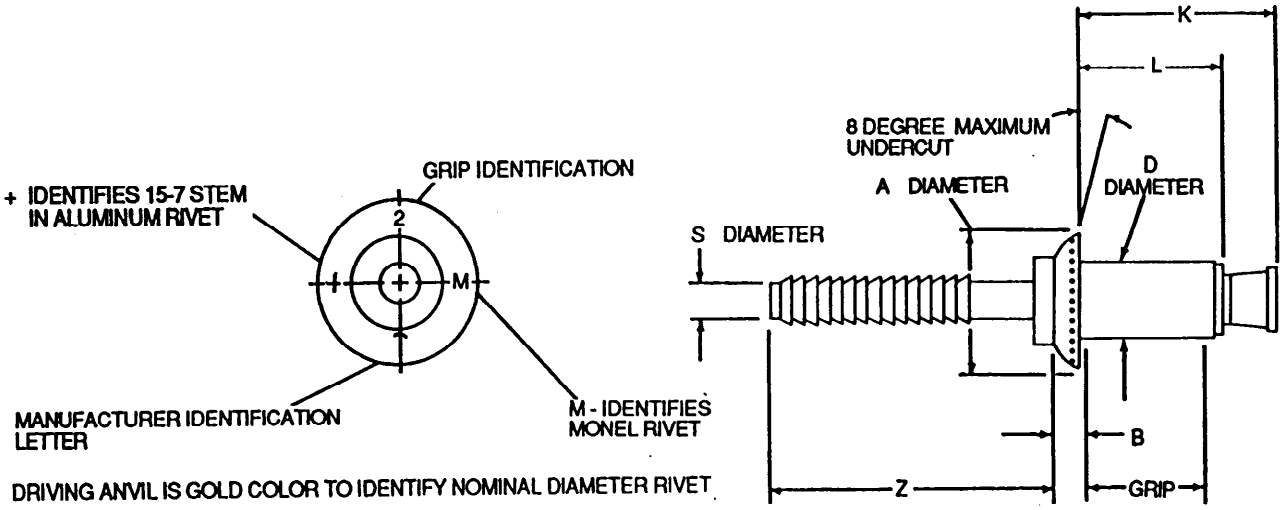

DASH NUMBERS

DIAMETER-DASH NO.	A (±.004)	B (+.010) (-.000)	D (+.003) (-.001)	S REF	Z MINIMUM	HOLE LIMITS
-4	.250	.054	.126	.073	.87	.129-.132
-5	.312	.067	.157	.091	.94	.160-.164
-6	.375	.080	.189	.110	.94	.192.-196

RIVET NUMBER, MATERIAL, AND FINISH DESCRIPTION

RIVET NUMBER	NAS 523 CODE	MATERIAL			FINISH		
		SLEEVE	STEM	LOCKRING	SLEEVE	STEM	LOCKRING
CR 3213	ARM	5056 ALUMINUM ALLOY QQ-A-430	8740 ALLOY STEEL AMS 6322	A-286 CRES AMS 5731	MIL-C-5541 PLAIN COLOR	CAD PLATE QQ-P-416 TYPE II CLASS 2	NONE
CR 3223	—	5056 ALUMINUM ALLOY QQ-A-430	15-7 PH CRES AMS 5657	A-286 CRES AMS 5731	MIL-C-5541 PLAIN COLOR	CAD PLATE QQ-P-416 TYPE I CLASS 2	NONE
CR 3523	—	MONEL QQ-N-281	15-7 PH CRES AMS 5657	A-286 CRES AMS 5731	NONE	DRY FILM CHERRY SPEC. C-30	NONE
CR 3523P	—	MONEL QQ-N-281	15-7 PH CRES AMS 5657	A-286 CRES AMS 5731	CAD PLATE QQ-P-416 TYPE II CLASS 2	CAD PLATE QQ-P-416 TYPE I CLASS 2	NONE

Figure 7-34. Protruding Head Nominal Diameter CherryMAX Rivet (Sheet 1 of 2)

RIVET DIAMETERS AND GRIP RANGES

GRIP LIMITS 1/16 RANGE		1/8 DIAMETER		
MINIMUM	MAXIMUM	DASH NO	L (± 010)	K MAXIMUM
025	062	4-1	161	38
063	125	4-2	224	45
126	187	4-3	287	51
188	250	4-4	349	57
251	312	4-5	412	63
313	375	4-6	474	70
376	437	4-7	537	76
438	500	4-8	599	82
501	562	4-9	662	88
563	625			
626	687			
688	750			

GRIP LIMITS 1/16 RANGE		5/32 DIAMETER		
MINIMUM	MAXIMUM	DASH NO	L (± 010)	K MAXIMUM
031	062	5-1	187	41
063	125	5-2	230	47
126	187	5-3	293	53
188	250	5-4	355	59
251	312	5-5	418	65
313	375	5-6	480	72
376	437	5-7	543	77
438	500	5-8	605	84
501	562	5-9	668	90
563	625	5-10	730	96
626	687	5-11	793	1 02
688	750			

GRIP LIMITS 1/16 RANGE		3/16 DIAMETER		
MINIMUM	MAXIMUM	DASH NO	L (± 010)	K MAXIMUM
037	062	6-1	219	47
063	125	6-2	262	51
126	187	6-3	325	57
188	250	6-4	387	64
251	312	6-5	450	70
313	375	6-6	512	76
376	437	6-7	575	82
438	500	6-8	637	88
501	562	6-9	700	95
563	625	6-10	762	1 01
626	687	6-11	825	1 07
688	750	6-12	887	1 13

Figure 7-34. Protruding Head Nominal Diameter CherryMAX Rivet (Sheet 2 of 2)

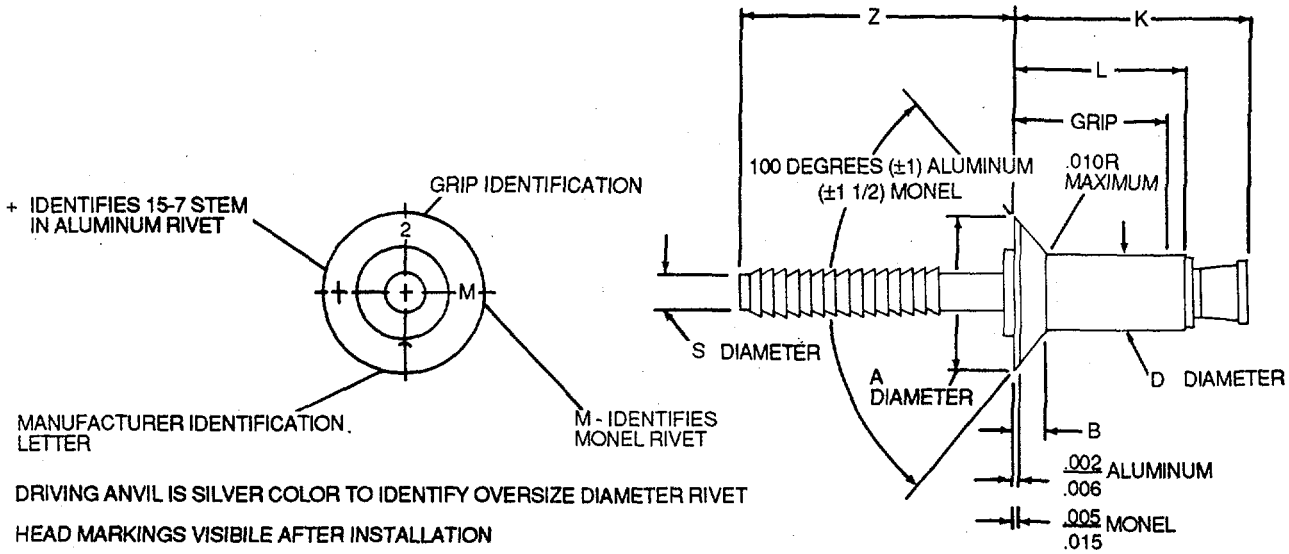

DRIVING ANVIL IS SILVER COLOR TO IDENTIFY OVERSIZE DIAMETER RIVET

HEAD MARKINGS VISIBILE AFTER INSTALLATION

DASH NUMBERS

DIAMETER DASH NO.	A (±.004)	B REF	D (+.003) (-.001)	S REF	Z MINIMUM	HOLE LIMITS
-4	.225	.035	.140	.081	.87	.143-.146
-5	.286	.047	.173	.100	.94	.176-.180
-6	.353	.063	.201	.177	.94	.205-.209

RIVET NUMBER, MATERIAL, AND FINISH DESCRIPTION

RIVET NUMBER	NAS 523 CODE	MATERIAL			FINISH		
		SLEEVE	STEM	LOCKRING	SLEEVE	STEM	LOCKRING
CR 3242	ARD	5056 ALUMINUM ALLOY QQ-A-430	8740 ALLOY STEEL AMS 6322	A-286 CRES AMS 5731	MIL-C-5541 PLAIN COLOR	CAD PLATE QQ-P-416 TYPE II CLASS 2	NONE
CR 3252	ARO	5056 ALUMINUM ALLOY QQ-A-430	15-7 PH CRES AMS 5657	A-286 CRES AMS 5731	MIL-C-5541 PLAIN COLOR	CAD PLATE QQ-P-416 TYPE I CLASS 2	NONE
CR 3552	ARF	MONEL QQ-N-281	15-7 PH CRES AMS 5657	A-286 CRES AMS 5731	NONE	DRY FILM CHERRY SPEC. C-30	NONE
CR 3552P	—	MONEL QQ-N-281	15-7 PH CRES AMS 5657	A-286 CRES AMS 5731	CAD PLATE QQ-P-416 TYPE II CLASS 2	CAD PLATE QQ-P-416 TYPE I CLASS 2	NONE

Figure 7-35. Countersunk Head Oversize Diameter CherryMAX Rivet (Sheet 1 of 2)

RIVET DIAMETERS AND GRIP RANGES

GRIP LIMITS 1/16 RANGE		1/8 DIAMETER		
MINIMUM	MAXIMUM	DASH NO.	L (±.010)	K MAXIMUM
.045	.125	4-2	.238	.45
.126	.187	4-3	.301	.52
.188	.250	4-4	.363	.58
.251	.312	4-5	.426	.65
.313	.375	4-6	.488	.71
.376	.437	4-7	.551	.78
.438	.500	4-8	.613	.84
.501	.562	4-9	.676	.90
.563	.625			
.626	.687			
.688	.750			

GRIP LIMITS 1/16 RANGE		5/32 DIAMETER		
MINIMUM	MAXIMUM	DASH NO.	L (±.010)	K MAXIMUM
.063	.125	5-2	.266	.47
.126	.187	5-3	.309	.53
.188	.250	5-4	.371	.60
.251	.312	5-5	.434	.66
.313	.375	5-6	.496	.72
.376	.437	5-7	.559	.79
.438	.500	5-8	.621	.85
.501	.562	5-9	.684	.91
.563	.625	5-10	.746	.98
.626	.687	5-11	.809	1.04
.688	.750			

GRIP LIMITS 1/16 RANGE		3/16 DIAMETER		
MINIMUM	MAXIMUM	DASH NO.	L (±.010)	K MAXIMUM
.073	.125	6-2	.265	.48
.126	.187	6-3	.328	.55
.188	.250	6-4	.390	.62
.251	.312	6-5	.453	.68
.313	.375	6-6	.515	.74
.376	.437	6-7	.578	.82
.438	.500	6-8	.640	.88
.501	.562	6-9	.703	.95
.563	.625	6-10	.765	1.01
.626	.687	6-11	.828	1.07
.688	.750	6-12	.890	1.14

Figure 7-35. Countersunk Head Oversize Diameter CherryMAX Rivet (Sheet 2 of 2)

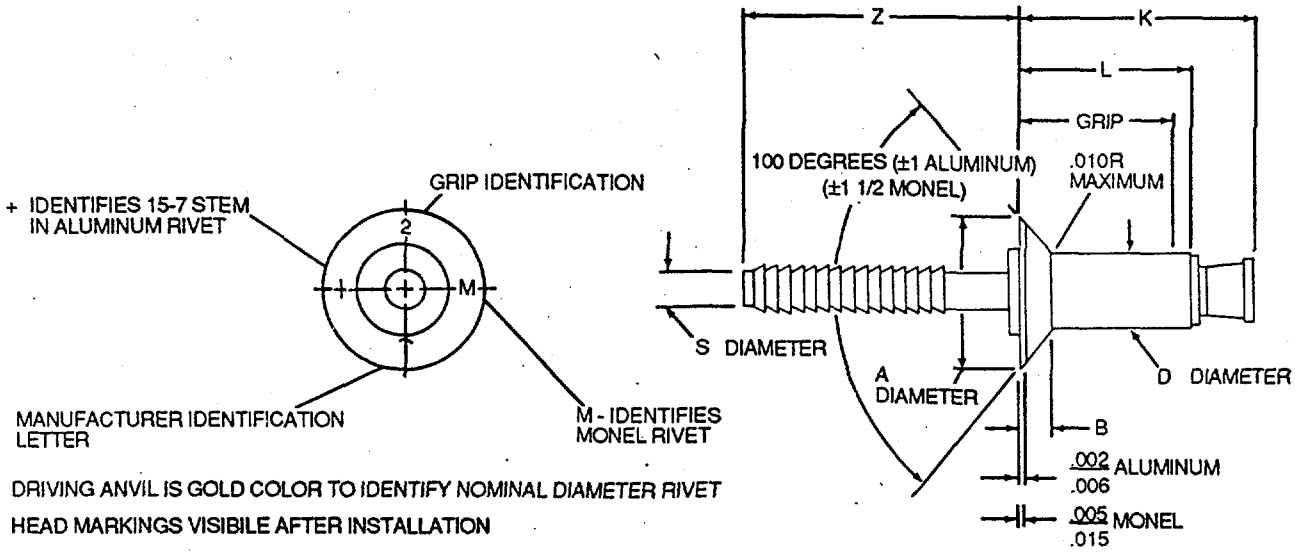

DRIVING ANVIL IS GOLD COLOR TO IDENTIFY NOMINAL DIAMETER RIVET HEAD MARKINGS VISIBILE AFTER INSTALLATION

DASH NUMBERS

DIAMETER DASH NO.	A (±.004)	B REF	D (+.003) (-.001)	S REF	Z MIN	HOLE LIMITS
-4	.225	.042	.126	.073	.87	.129-.132
-5	.286	.055	.157	.091	.94	.160-.164
-6	.353	.070	.189	.110	.94	.192-.196

RIVET NUMBER, MATERIAL, AND FINISH DESCRIPTION

RIVET NUMBER	NAS 523 CODE	FINISH			MATERIAL		
		SLEEVE	STEM	LOCKRING	SLEEVE	STEM	LOCKRING
CR 3212	ARM	5056 ALUMINUM ALLOY QQ-A-430	8740 ALLOY STEEL AMS 6322	A-286 CRES AMS 5731	MIL-C-5541 PLAIN COLOR	CAD PLATE QQ-P-416 TYPE II CLASS 2	NONE
CR 3222	—	5056 ALUMINUM ALLOY QQ-A-430	15-7 PH CRES AMS 5657	A-286 CRES AMS 5731	MIL-C-5541 PLAIN COLOR	CAD PLATE QQ-P-416 TYPE I CLASS 2	NONE
CR 3522	—	MONEL QQ-N-281	15-7 PH CRES AMS 5657	A-286 CRES AMS 5731	NONE	DRY FLIM CHERRY SPEC. C30	NONE
CR 3522P	—	MONEL QQ-N-281	15-7 PH CRES AMS 5657	A-286 CRES AMS 5731	CAD PLATE QQ-P-416 TYPE II CLASS 2	CAD PLATE QQ-P-416 TYPE I CLASS 2	NONE

Figure 7-36. Protruding Head Oversize Diameter CherryMAX Rivet (Sheet 1 of 2)

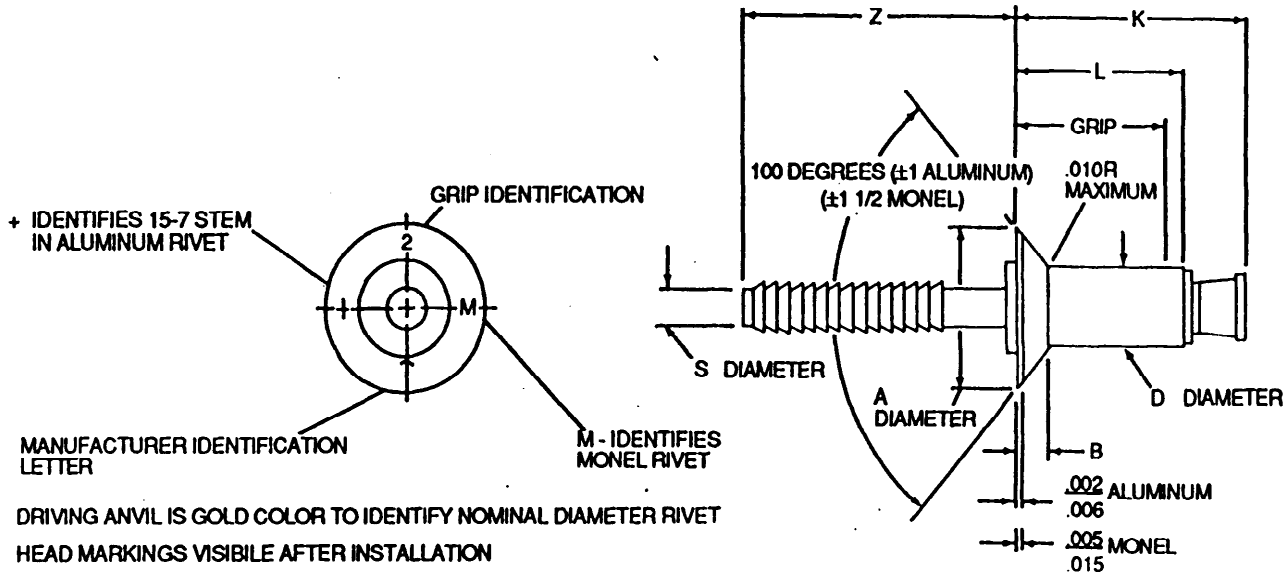

DASH NUMBERS

DIAMETER DASH NO.	A (±.004)	B REF	D (+.003) (-.001)	S REF	Z MIN	HOLE LIMITS
-4	.225	.042	.126	.073	.87	.129-.132
-5	.286	.055	.157	.091	.94	.160-.164
-6	.353	.070	.189	.110	.94	.192-.196

RIVET NUMBER, MATERIAL, AND FINISH DESCRIPTION

RIVET NUMBER	NAS 523 CODE	MATERIAL			FINISH		
		SLEEVE	STEM	LOCKRING	SLEEVE	STEM	LOCKRING
CR 3212	ARM	5056 ALUMINUM ALLOY QQ-A-430	8740 ALLOY STEEL AMS 6322	A-286 CRES AMS 5731	MIL-C-5541 PLAIN COLOR	CAD PLATE QQ-P-416 TYPE II CLASS 2	NONE
CR 3222	—	5056 ALUMINUM ALLOY QQ-A-430	15-7 PH CRES AMS 5657	A-286 CRES AMS 5731	MIL-C-5541 PLAIN COLOR	CAD PLATE QQ-P-416 TYPE I CLASS 2	NONE
CR 3522	—	MONEL QQ-N-281	15-7 PH CRES AMS 5657	A-286 CRES AMS 5731	NONE	DRY FLIM CHERRY SPEC. C30	NONE
CR 3522P	—	MONEL QQ-N-281	15-7 PH CRES AMS 5657	A-286 CRES AMS 5731	CAD PLATE QQ-P-416 TYPE II CLASS 2	CAD PLATE QQ-P-416 TYPE I CLASS 2	NONE

Figure 7-36. Protruding Head Oversize Diameter CherryMAX Rivet (Sheet 2 of 2)

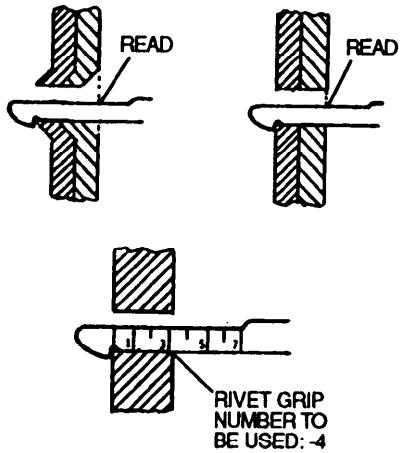

Figure 7-37. Use of 269C3 Cherry Grip Gauge

(I) Hole Preparation. Hole Preparation consists of drilling, countersinking or dimpling, and deburring.

(a) Drilling. Drilling dimensions for, CherryMAX rivets are shown in table 7-16.

(b) Countersinking. Accurate countersinking is of primary importance to the structural integrity of a flush-riveted joint. Standard countersinking procedures as used with solid rivets are also applicable to CherryMAX rivets. The dimensions are shown in figure 7-48. However, the countersink pilot should be no more than 0.001 inch smaller than the hole diameter. A pilot that is greatly undersize will produce countersinks that are not concentric with the hole, creating head gap problems and countersinks whose axes are not in line with the axes of the drilled holes. This will create cocked rivet heads, as shown in figure 7-49.

(c) Dimpling. Normal dimpling procedures stretch and enlarge the pilot holes in thin sheet applications. The sheets (as dimpled) provide only sharp edges within the hole (see figure 7-50). To overcome the problems inherent in this type of application, the dimple should first be prepared with a hole size that will allow for subsequent reaming. The hole should then be reamed to the dimensions specified for the size of rivet being installed. The end result is shown in figure 7-50.

(d) Deburring. All drilling operations cause burrs to form on each end of the hole being drilled and between the sheets, as shown in figure 7-51. Whenever possible, all burrs should be removed. Do not remove

Table 7-11. Grip Range

Material thickness range		
Minimum (inch)	**Maximum (inch)**	**Rivet grip No.**
	1/16	-1
	1/8	-2
1/8	3/16	-3
3/16	1/4	-4
1/4	5/16	-5
5/16	3/8	-6
3/8	7/16	-7
7/16	1/2	-8
1/2	9/16	-9
9/16	5/8	-10
5/8	11/16	-11
11/16	3/4	-12

NOTE

For double dimpled sheets, add countersunk head height to material thickness.

Table 7-12. Minimum Rivet Shear and Tensile Strength (Pounds) in Steel Coupons

CherryMAX rivets			Single shear								Tensile			
			Aluminum				Monel				Aluminum		Monel	
			Nominal		Oversize		Nominal		Oversize		Nomi-nal	Over-size	Nomi-nal	Over-size
Rivet Diam. & Grip		Sheet Thick-ness	3212 3222	3213 3223	3242 3252	3243 3253	3522	3523	3552	3553 3213 3222 3223	3212 3243 3252 3253	3242 3523	3522 3553	3552
-4 (1/8 inch)	-2	2 x 0.062	411	505	480	592	485	646	570	750				
	-3	2 x 0.093	531	584	614	692	667	730	785	895	285	345	400	490
	-4	2 x 0.125	651	655	741	771	730	730	895	895				
	-5	2 x 0.156	664	664	814	814	730	730	895	895				
-5 (5/32 inch)	-2	2 x 0.062	---	699	---	805	---	882	---	1015				
	-3	2 x 0.093	714	840	815	982	859	1134	1100	1290				
	-4	2 x 0.125	862	929	977	1080	1080	1134	1270	1353				
	-5	2 x 0.156	1012	1018	1137	1177	1134	1134	1353	1353				
	-6	2 x 0.187	1030	1030	1245	1245	1134	1134	1353	1353				
-6 (3/16 inch)	-2	2 x 0.062	---	920	---	1015	---	1144	---	1255				
	-3	2 x 0.093	918	1131	105	1240	1029	1438	1210	1575				
	-4	2 x 0.125	1095	1248	1200	1386	1284	1626	1510	1823	635	710	890	1000
	-5	2 x 0.156	1310	1355	1388	1504	1550	1626	1823	1823				
	-6	2 x 0.187	1453	1462	1579	1617	1626	1626	1823	1823				
	-7	2 x 0.219	1480	1480	1685	1685	1626	1626	1823	1823				

NOTE

- **Values shown are fastener capabilities only. Design values will be limited by the bearing strength of the sheet material used.**
- **For rivet grips greater than listed, use highest value shown for the basic part number and diameter.**

the edge of the hole on the blind side of the sheet since this will affect the clamping power of the rivet. This may also affect the strength of the riveted joint. (See figure 7-52.)

(2) Installation of rivet. Installation of a CherryMAX rivet Is relatively straightforward:

(a) Place the rivet in the hole (see figure 7-47, step A).

(b) Place the pulling head on the rivet.

(c) Hold the riveter and pulling head In line with the axis of the rivet Press firmly against the rivet head (see figure 7-47, step B).

(d) Apply a steady, firm pressure and pull the trigger. The rivet clamping action will pull the metal sheets together, seat the rivet head, and break the stem flush with the head of the rivet (see figure 7-47).

(3) Shaving countersunk rivets. Normal shop practice will result In countersunk rivets that are essentially flush with the aircraft skin, and further operations are not usually necessary. However, when perfect

aerodynamic flushness is required, the sheet should be countersunk to a shallower depth so that the rivet heads will protrude, and shaved to produce complete aerodynamic flushness (see figure 7-53). Table 7-17 shows the recommended countersunk diameters to be used for shaving.

e. CherryMAX Inspection. Inspection for the proper installation of CherryMAX rivets can be made from the visible side of the work.

(1) Stem and collar flushness If the rivet stem and collar are flush within the limits shown In figure 7-54, It is safe to assume that a satisfactory blind head and lock has been formed.

(2) Typical bind head. If the visible side indicates correct installation, blind heads similar to those in figure 7-55 will have been obtained. If the blind head Is accessible, it can be inspected to verify correct installation along with figures 7-55 and 7-56.

f. CherryMAX Troubleshooting The correct Installation of CherryMAX rivets requires that the Instructions regarding hole preparation, tools, and installation techniques be carefully followed. Table 7-18 shows the most common troubles associated with CherryMAX installation.

g. CherryMAX Removal If It is necessary to remove an installed CherryMAX rivet, use the following procedures and figure 7-57:

(1) Use a small center drill to provide a guide for a larger drill on top of the rivet stem. With the larger drill, drill away the upper portion of the stem to destroy the lock.

(2) Drive out the rivet stem, using a drift pin.

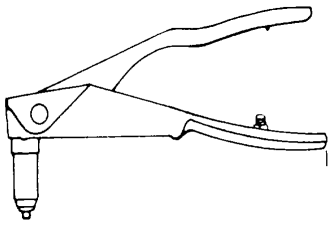

Figure 7-38. G-27 Hand Riveter

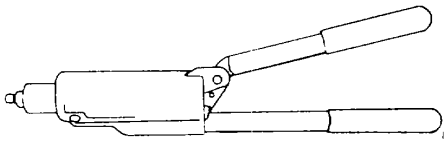

Figure 7-39. G-749 Hand Riveter

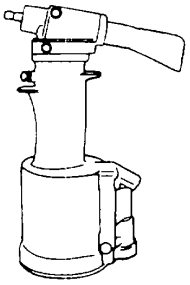

Figure 7-40. G-701 Power Riveter

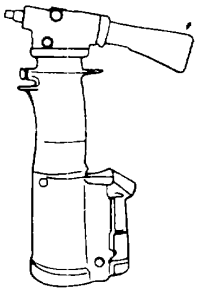

Figure 7-41. G-704 Power Riveter

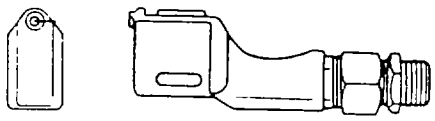

H763-456 OFFSET
PULLING HEAD

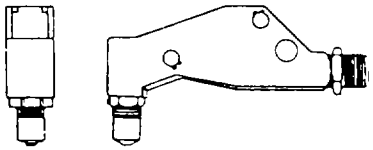

H753-456
RIGHT ANGLE
PULLING HEAD

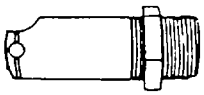

H701A-456 STRAIGHT
PULLING HEAD
FOR G-701 AND G-704
ONLY

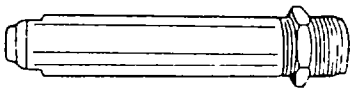

H749-456 STRAIGHT PULLING HEAD
FOR G-749 ONLY

Figure 7-42. CherryMAX Pulling Heads

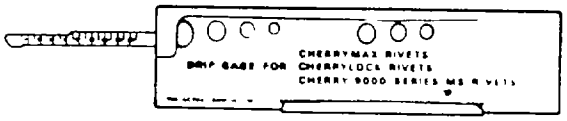

Figure 7-43. 269C3 Grip Gauge

Figure 7-44. T-172 Rivet Hole Gauge

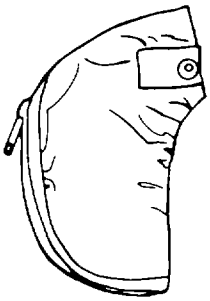

Figure 7-45. 670A20 Stem Catcher Bag

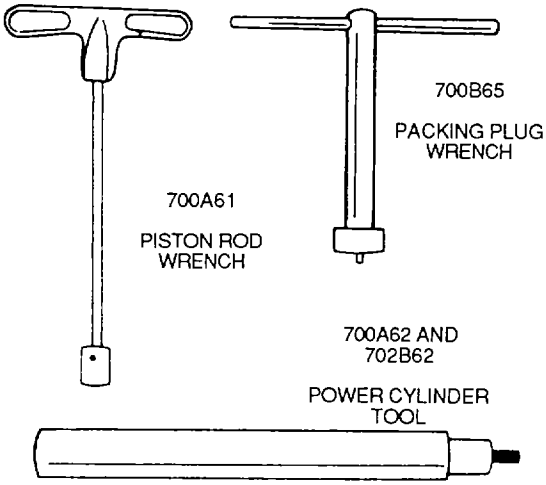

Figure 7-46. Cherry Assembly Tools

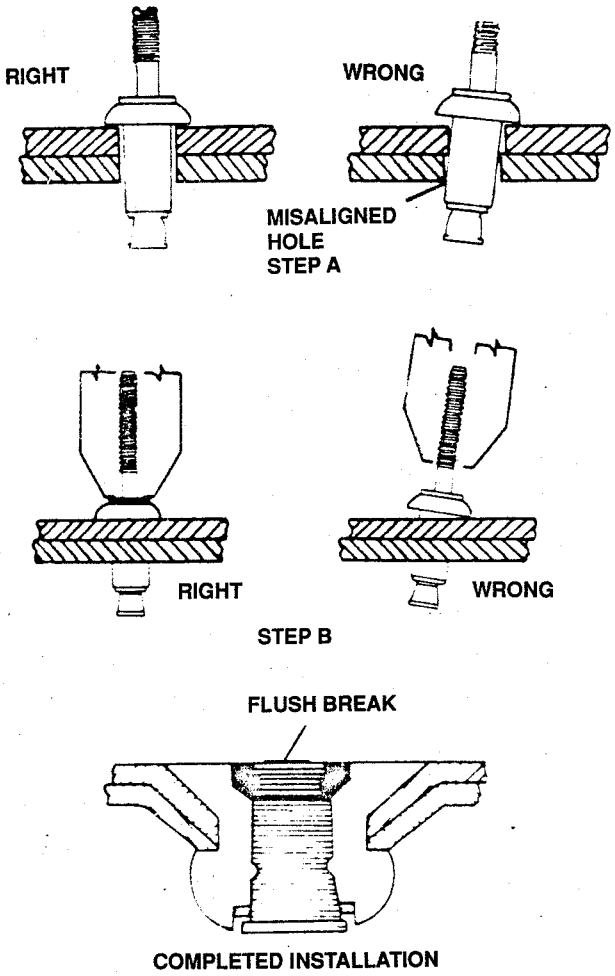

Figure 7-47. Use of CherryMAX Tools

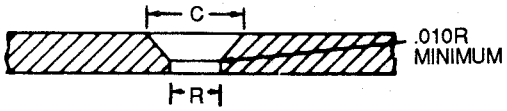

RIVET DIAMETER	C MINIMUM	C MAXIMUM
1/8	.222	.228
5/32	.283	.289
3/16	.350	.356

Figure 7-48. Countersinking Dimensions (100 Degrees) for CherryMAX

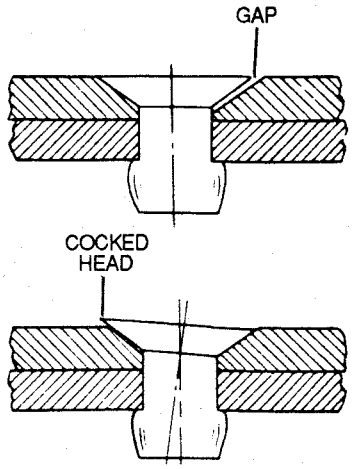

Figure 7-49. Incorrect Countersinking

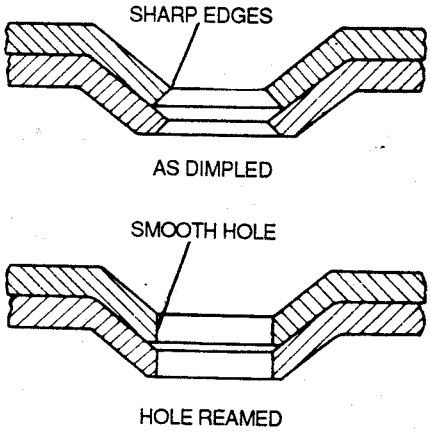

Figure 7-50. Dimpling and Reaming

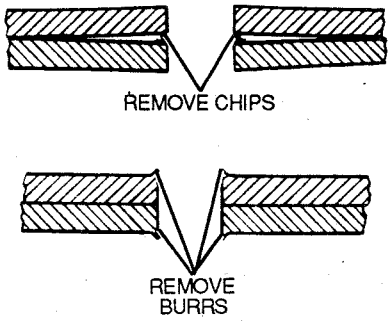

Figure 7-51. Burrs After Drilling

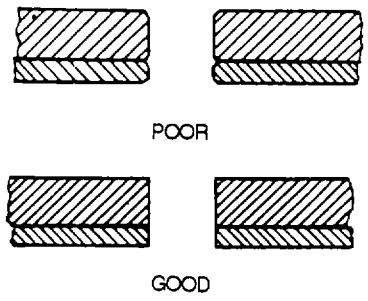

Figure 7-52. After Deburring

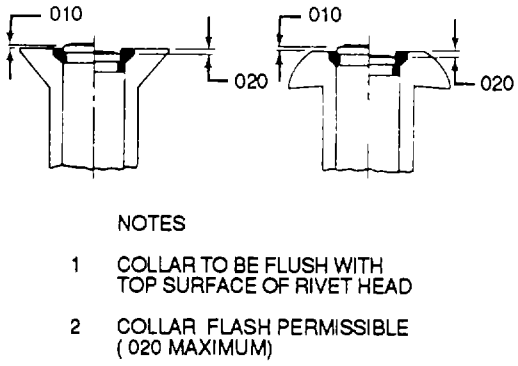

Figure 7-54. CherryMAX Stem and Collar Flushness

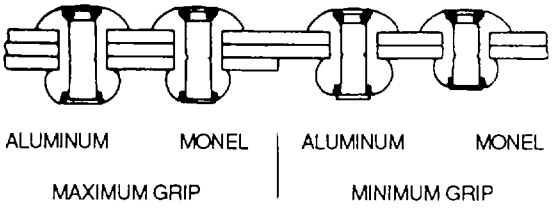

Figure 7-55. Typical CherryMAX Blind Heads

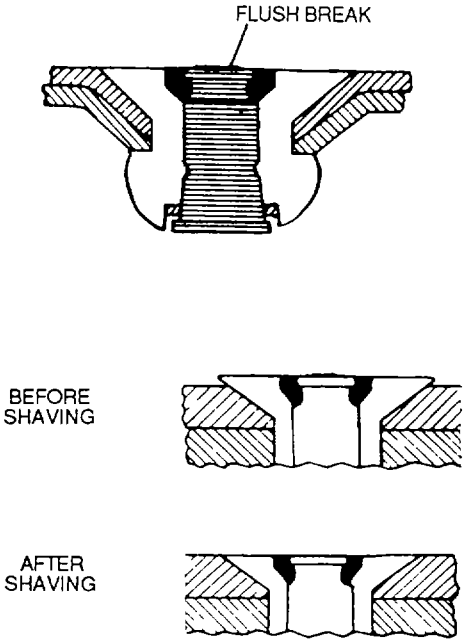

Figure 7-53. CherryMAX Rivet Shaving

NOTE

SUPERFICIAL STRETCH MARKS WHICH MAY APPEAR IN THE RIVET SLEEVE ARE NOT DETRIMENTAL TO RIVET STRENGTH AND ARE ACCEPTABLE

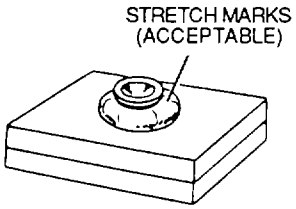

Figure 7-56. CherryMAX Sleeve Stretch Marks

Table 7-13. Joint Allowable Loads (Pounds) Per MIL-HDBK-5 Criteria (Values Listed Are the Lower of Ultimate or 1.5 Times Yield Average)

	Universal and countersunk head aluminum rivets in 2024 T3 alclad aluminum. Countersunk head rivets in machine countersunk sheet.															
Rivet shank diameter	Rivet part number	Sheet thickness														
		0.016	0.020	0.025	0.032	0.040	0.050	0.063	0.071	0.080	0.090	0.100	0.125	0.160	0.190	0.250
1/8-inch Nominal	CR 3212 Countersunk	—	—	—	114	203	290	405	470	495	524	551	625	664	664	664
	CR 3213 Universal	152	206	272	342	392	454	518	538	561	586	611	664	664	664	664
1/8-inch Oversize	CR 3242 Countersunk	—	—	171	236	312	405	528	594	620	642	665	722	801	814	814
	CR 3243 Universal	187	245	319	395	451	520	610	641	667	697	726	801	814	814	814
1/8-inch Solids	MS 20426 AD Countersunk	—	147	221	272	309	340	363	373	388	388	388	388	388	388	388
	MS 20470 AD	—	—	356	374	386	388	388	388	388	388	388	388	338	338	338
5/32-inch Nominal	CR 3212 Countersunk	—	—	—	—	204	315	449	539	648	734	768	857	982	1030	1030
	CR 3213 Universal	—	236	320	439	532	610	711	772	810	841	872	951	1030	1030	1030
5/32-inch Oversize	CR 3242 Countersunk	—	—	—	273	366	483	633	726	830	922	950	1020	1120	1205	1245
	CR 3243	—	288	378	506	608	694	804	873	949	987	1025	1115	1245	1245	1245

Table 7-13. Joint Allowable Loads (Pounds) Per MIL-HDBK-5 Criteria (Values Listed Are the Lower of Ultimate or 1.5 Times Yield Average)-CONT

	Universal and Countersunk head aluminum rivets in 2024 T3 alclad aluminum. Countersunk head rivets in machine countersunk sheet.															
Rivet shank diameter	Rivet part number	Sheet thickness														
		0.016	0.020	0.025	0.032	0.040	0.050	0.063	0.071	0.080	0.090	0.100	0.125	0.160	0.190	0.250
5/32-inch Solids	MS 20426 AD Countersunk	—	—	165	300	398	479	523	542	560	575	596	596	596	596	596
	MS 20470 AD Universal	—	—	—	551	574	593	596	596	596	596	596	596	596	596	596
3/16-inch Nominal	CR 3212 Countersunk	—	—	—	—	—	—	507	603	734	863	987	1128	1286	1410	1480
	CR 3213	—	—	362	502	661	784	904	974	1060	1140	1175	1270	1400	1480	1480
3/16-inch Oversize	CR 3242 Countersunk	—	—	—	—	407	543	717	825	945	1083	1205	1315	1425	1525	1685
	CR 3243	—	—	429	576	741	858	985	1065	1155	1255	1315	1420	1570	1685	1685
3/16-inch Solids	MS 20426 AD Countersunk	—	—	—	—	410	584	705	739	769	795	818	853	862	862	862
	MS 20470 AD Universal	—	—	—	—	804	836	862	862	862	862	862	862	862	862	862

Table 7-14. Tool Capacity Chart

Type of tool	Cherry riveter model	Pulling head	All grip lengths					
			Nominal rivet diameter			Oversize rivet diameter		
			-4	-5	-6	-4	-5	-6
CherryMAX	G-27	—	X			X		
	G-701	H701A-456	X	X		X	X	
	G-704	H701A-456	X	X	X	X	X	X
	G-749	H749-456	X	X	X	X	X	X
Cherrylock	G-700	H680B200	X			X		
	G-784	H680B200	X	X	X	X	X	X
	G-684 obsolete	H680B200	X	X	X	X	X	X
MS type riveter	G-36	H9015-3C	X					
		H9015-4C				X		
	G-55	H9040-4C	X	X	X	X	X	X
		H9040-5C			X		X	X
	G-740	H9040-4C	X	X	X	X	X	X
		H9040-5C			X		X	X
	G-40 (obsolete)	H9040-4C	X	X	X	X	X	X
		H9040-5C			X		X	X
	G-715	H9015-3C	X					
		H9015-4C		X		X	X	
		H9015-5C					X	
	G-86	H9040-4C	X	X	X	X	X	X
	G-89	H9040-5C			X		X	X

Table 7-15. CherryMAX Pulling Heads

Rivet diameter nominal and oversize	Head type	Head part NR	For use on these guns
1/8, 5/32 & 3/16 Inch	Straight	H701 B-456	G-704
1/4 Inch	Straight	H744A-8	G-744
1/8, 5/32 & 3/16 inch	Straight	H749-456	G-749
1/4 Inch	Straight	H749-8	G-749
1/8, 5/32 & 3/16 inch	Right Angle	H753A-456	G-704 & G-749
1/4 Inch	Right Angle	H828-8	G-744
1/8, 5/32 & 3/16 Inch	Offset	H763-456	G-704 & G-749
1/4 Inch	Offset	H827-8	G-744

Table 7-16. CherryMAX Drilling Dimensions

Rivet Diameter	Drill Size	Minimum	Maximum
	Nominal Diameter CherryMAX		
1/8	No. 30	0.129	0.132
5/32	No. 20	0.160	0.164
3/16	No. 10	0.192	0.196
	Oversize Diameter CherryMAX		
1/8	No. 27	0.143	0.146
5/32	No. 16	0.176	0.180
3/16	No. 5	0.205	0.209

Table 7-17. Recommended Countersinks for Shaving

Rivet diameter	Recommended diameter (inch)	Countersink (+0.005) (-0.000)	Approximate protrusion of rivet head above sheet (inch)
1/8	0.214"		0.005"
5/32	0.272"		0.006"
3/16	0.335"		0.007"

Table 7-18. CherryMAX Troubleshooting

Symptom	Cause	Remedy
Rivet stem breaks high	Rivet installed In oversize hole	Use large diameter rivet or drill smaller holes
Rivet stem breaks low	Rivet Installed In undersize hole	Drill out holes to proper size
	Rivet installed In over maximum grip	Use longer grip rivet
	Holes slanted or misaligned	Take care to align holes
	Installer cocks pulling head	Take care to align tool and keep arm flexible to allow rivet to align Itself
Head does not seat properly	Holes slanted or misaligned	Take care to align holes
	Countersink not concentric with hole	Use countersink pilot that is close to hole size
	Installer cocks pulling head	Hold tool and pulling head In a flexible manner so that rivet can clamp head down properly

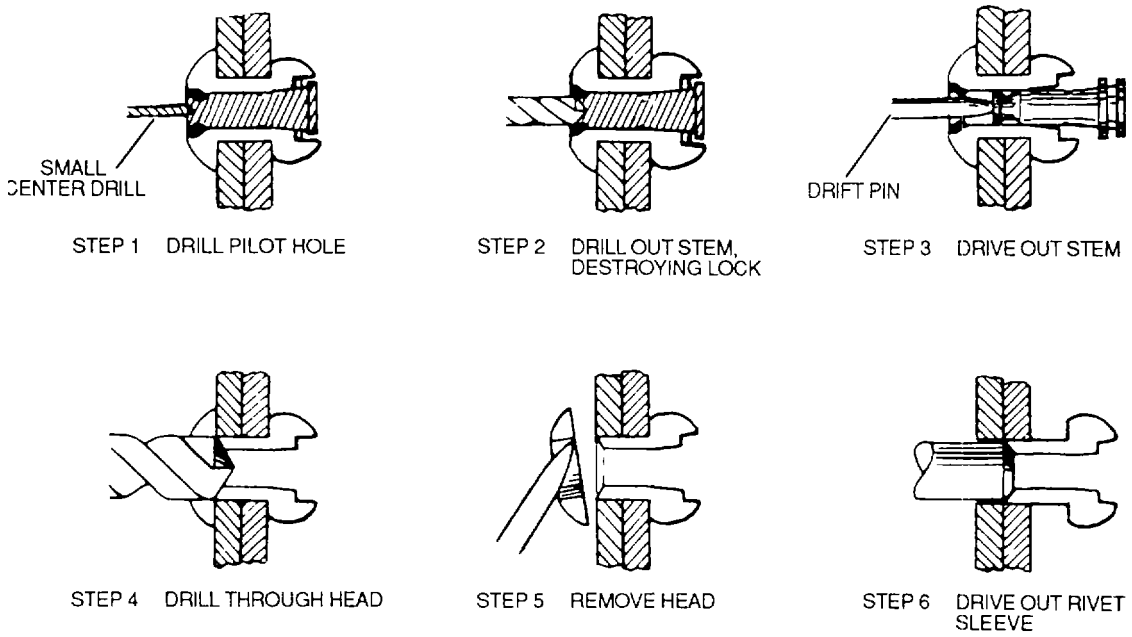

Figure 7-57. CherryMAX Removal

(3) Drill nearly through the head of the rivet, using a drill the same size as the shank diameter.

NOTE

Do not drill completely through the rivet sleeve to remove a rivet, as this will tend to enlarge the hole.

(4) Using a drift pin as a pry, break off the rivet head.

(5) Drive out the remaining rivet shank with a drift pin having a diameter equal to the rivet shank.

7-9. Rivnuts. Rivnuts are Internally threaded and counterbored tubular rivets that can be installed in blind applications They are used in locations where bucking access Is Impossible, such as the attachment of deicing boots to leading edges Rivnuts are made of 6053 aluminum alloy or steel In two head styles and ends flat and countersunk heads with open or closed ends, as shown In figure 7-58 Keyed rivnuts are used as a nut plate Rivnuts without keys are used for straight blind riveting where no torque loads are Imposed Flat-head nvnuts are used when head thickness will not interfere with the surface contour of the material If flush Installations are required, countersunk head rivnuts are used Closed end rivnuts are used when a sealed Installation is required

a. *Identification.* An example of a typical part number is NAS 1329H3K130L NAS 1329 indicates the basic standard to which a rivnut conforms. The letter between the military specification number and the first dash number Indicates material type and finish ("A" aluminum alloy, "S" for carbon steel, "H" for alloy steel, and "C" for corrosion resistant steel). The first dash number, after the material type, Indicates machine screw size of the thread. All rivnut head styles are available with screw sizes of 4-40,6-32, 8-32, 10-32, 1/4-20, and 5/16-18 Keyed rivnuts for use as nutplates are available for the 6-32, 8-32, and 10-32 thread sizes. A dash following the machine screw size indicates open end keyless, "B" indicates closed end keyless, "K" Indicates open end with a key, "KB" Indicates closed end with a key. The final dash number indicates grip range In thousandths of an inch The presence of an "L" at the end of the part number indicates a thread locking feature.

b. Selection. The factors to be considered In selecting nvnuts are the material, head style, style of end, presence or absence of a key, and grip range.

(1) Material A rivnut should be made of the same metal as the material it Is to be used on.

(2) Head style When selecting head style, the location should be determined. If the rivnut is to be used In a location where aerodynamic smoothness or structural clearance is required, a countersunk rivnut should be used. If these factors are of no consequence, then the flat head may be used.

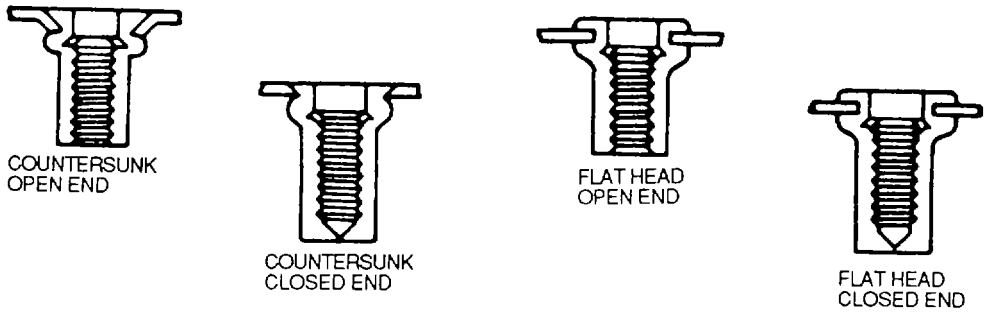

Figure 7-58. Rivnuts

(3) End style. When sealed installations are required, closed-end nvnuts should be used.

(4) Key. When machine screws are to be inserted, key-type nvnuts should be used.

(5) Grip range. The most important factor to consider is the proper grip length. The purpose of installing a rivnut is to produce an ideal bulge on the blind side of the work without distorting the threads inside the rivnut. Grip is the overall thickness of the material at the hole where the rivnut is to be installed. For flat head or countersunk head rivets that are to be Installed In machine countersunk or plain holes, grip should equal metal thickness. When countersunk head rivnuts are to be installed in dimpled or press countersunk holes, grip is the measurement from the top surface of the metal to the underside of the dimpled hole. The maximum grip of a rivnut is the greatest material thickness in which a specific rivnut can be properly installed; the minimum grip Is the least thickness in which a specific rivnut can be Installed. The grip range of a rivnut equals the variation between maximum and minimum thickness. It can be determined from Its part number, for example, a part number 6-120 rivnut has a maximum grip of 0 120 inch The minimum grip would equal the maximum grip of the preceding rivnut in the series (part number 6-75), or 0. 075 inch. Figure 7-59 shows the application of grip range for rivnuts.

c. Installation Tools. These include the hand operated and pneumatic headers and the key seating tool, as shown in figure 7-60. The hand-operated and pneumatic headers have a stud onto which the rivnut is threaded until its head rests against the anvil of the header. The key seating tool Is used for cutting keyways in sheet metal. If a key seating tool cannot be used because the metal Is too thick, a small round file may be used instead.

d. Installation Procedures. Installation of a rivnut involves drilling, cutting the keyway, and installing the rivnut.

(1) Drilling. Rivnut holes should be drilled as previously outlined In this manual.

(2) Cutting the keyway. If keyed rivnuts are to be used, cut the keyway after the hole has been reamed. In cutting the keyway, hold the keyway setter so that it makes a 90-degree angle with the work. Cut the keyway on the side of the hole away from the edges of the street, especially when the rivnut is used on the outside row. Operate the keyway setter by inserting it in the hole and squeezing the handles.

(3) Installing rivnut. See figure 7-61 for an illustration of the following procedure.

(a) Check the threaded stud of the heading tool to ensure that it is free from burrs and chips from the previous installation.

(b) Screw the rivnut on the stud until the head touches the anvil.

(c) Insert the rivnut in the hole (with the key inserted in the keyway) and hold the heading tool at right angles to the work.

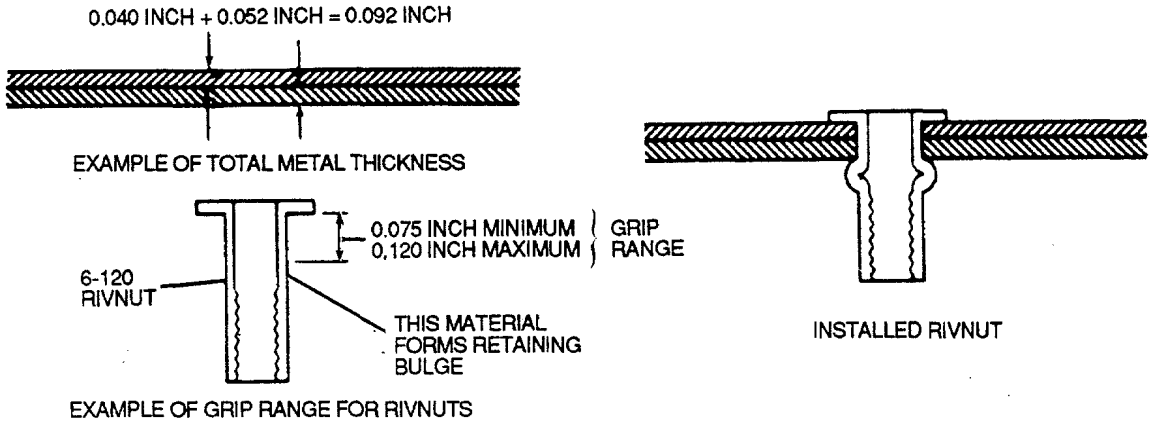

Figure 7-59. Determining Rivnut Grip Length

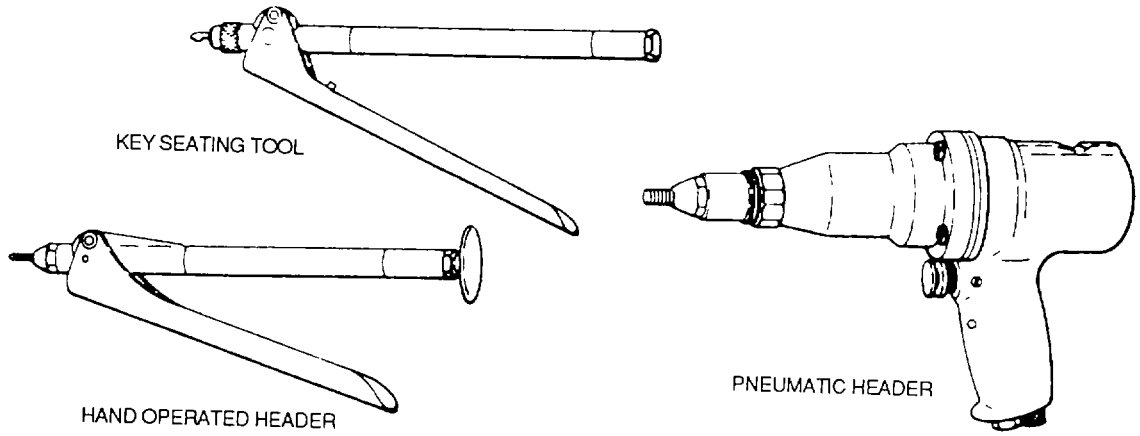

Figure 7-60. Rivnut Installation Tools

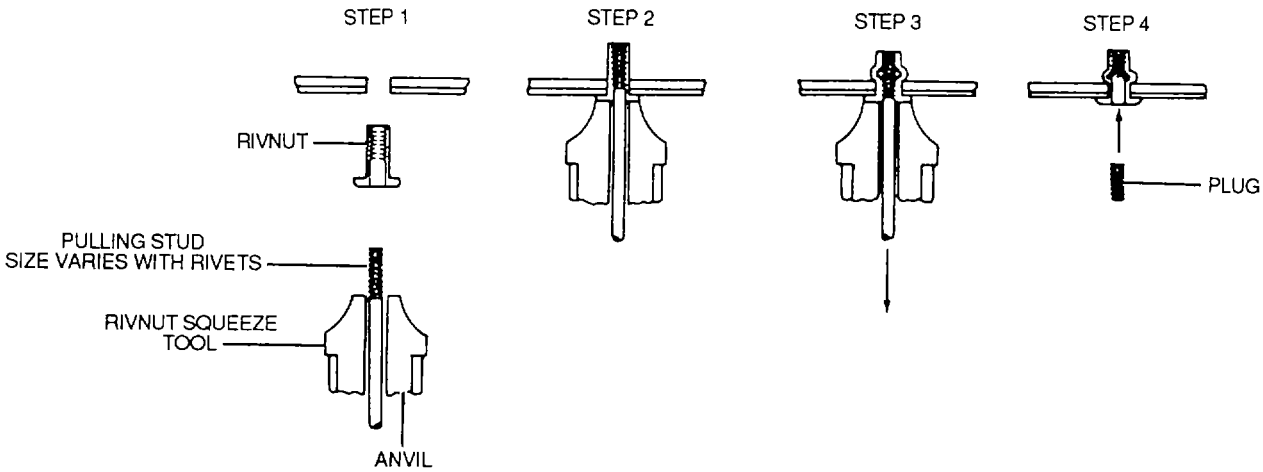

Figure 7-61. Rivnut Installation Procedure

(d) Press the head of the rivnut tightly against the sheet while slowly squeezing the handles of the heading tool together until the rivnut starts to bulb.

(e) Release the handles and screw the stud further into the rivnut (This prevents stripping the threads of the rivnut before it Is properly installed.)

(f) Continue squeezing the handles together and releasing them until the rivnut Installation is complete.

(g) Turn the crank counterclockwise to remove the stud of the installation crank from the rivnut.

NOTE

The Installation of the rivnut is not complete unless it is plugged, either with one of the plugs designed for that purpose, or with a machine screw. A rivnut does not develop its full strength when left hollow.

e. Removal Procedures. Rivnuts can be removed using the same size drill as used for the original hole. Because the rivnut is hollow, the drill is guided throughout the drilling operation. The same size rivnut can be installed in the same hole if desired.

7-10. Hi-Shear Rivets. The Hi-shear rivet, shown in figure 7-62, has two parts the pin and the collar. It is essentially a threadless bolt. It has the same shear strength as a bolt of equal diameter. It weighs about 40 percent as much as a bolt, and requires only about one-fifth the Installation time. It is about three times as strong as a sold shank rivet. The Hi-shear rivet is only used in shear applications. It is never used when the grip length is less than the shank diameter.

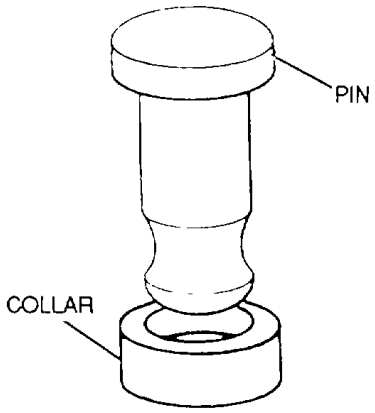

Figure 7-62. Hi-Shear Rivet Parts

a. Identification. Hi-shear rivets are available In flat-head and countersunk head styles. There are many different specification numbers, which vary according to the material, fit tolerance, and head style of the rivets.

MATERIAL/FIT/HEAD STYLE	SPECIFICATION NUMBERS
Steel/close tolerance head and shank/countersunk	NAS 525
Steel/close tolerance shank/ flathead	NAS 529
Steel/standard fit/protruding head	NAS 1054
Steel/close tolerance head countersunk	NAS 1055
Steel/oversize/flathead	MS21000
Steel/oversize/countersunk	MS21001

(1) First dash number. The first dash number following the specification number Indicates the nominal diameter In 1/32 inch.

(2) Second dash number . The second dash number denotes the maximum grip length in 1/16 inch.

(3) Collars. There are a number of different collars for use on the various rivets The applications are as follows:

COLLAR	HI-SHEAR RIVET TYPE
NAS 528	NAS 525-6, 7, 8, 9, 10, 11, 12 NAS 529-6, 7, 8, 9, 10, 11, 12 NAS 1054 NAS 1055

NOTE
The dash number for each collar indicates the nominal rivet diameter in 1/32 inch.

b. Selection The proper length rivet may be determined by the part number or by trial and error. When placed in the hole, the straight portion of the shank should be flush or extend not more than 1/16 inch through the work.

c. Installation Tools. Hi-shear rivets are installed using standard bucking bars and pneumatic guns or squeezers as previously discussed In this chapter Special rivet sets, shown In figure 7-63, form the collar over the grooved end of the rivet, trim excess material from the collar, and discharge that material from a discharge port In the set Each shank diameter requires a different sized set Special reverse bucking bars are available for driving Hi-shear rivets from the head end.

d. Installation Procedures. Installation of Hi-shear rivets consists of preparing the hole and installation

(1) Drilling. Drill holes undersize, and ream to the correct size.

(2) Spotfacing. If the angle of the work surface exceeds 5 degrees, spotfacing should be done. Figure 7-64 shows a Hi-shear rivet in such an installation.

(3) Countersinking. Use countersink Hi-shear rivets only in conjunction with either machine countersinking or machine subcountersinking wherein outer sheet may be dimpled by coining.

(4) Installation. Hi-shear rivets can be installed by driving from either end. Installation from the collar end is usually the standard procedure. See figure 7-65 and proceed as follows:

(a) Slip rivet collar over extending end of rivet.

(b) Place a heavy flush-type bucking bar against the head.

(c) Place rivet set over collar, align it with rivet, and apply pressure until the soft collar is forced into the groove in the rivet.

(d) Continue to apply pressure until head is fully formed and excess collar material is pinched off at the collar shearing edge of the rivet.

(5) Installation from headend. If it is necessary to install a Hi-shear rivet from the head end, proceed as follows:

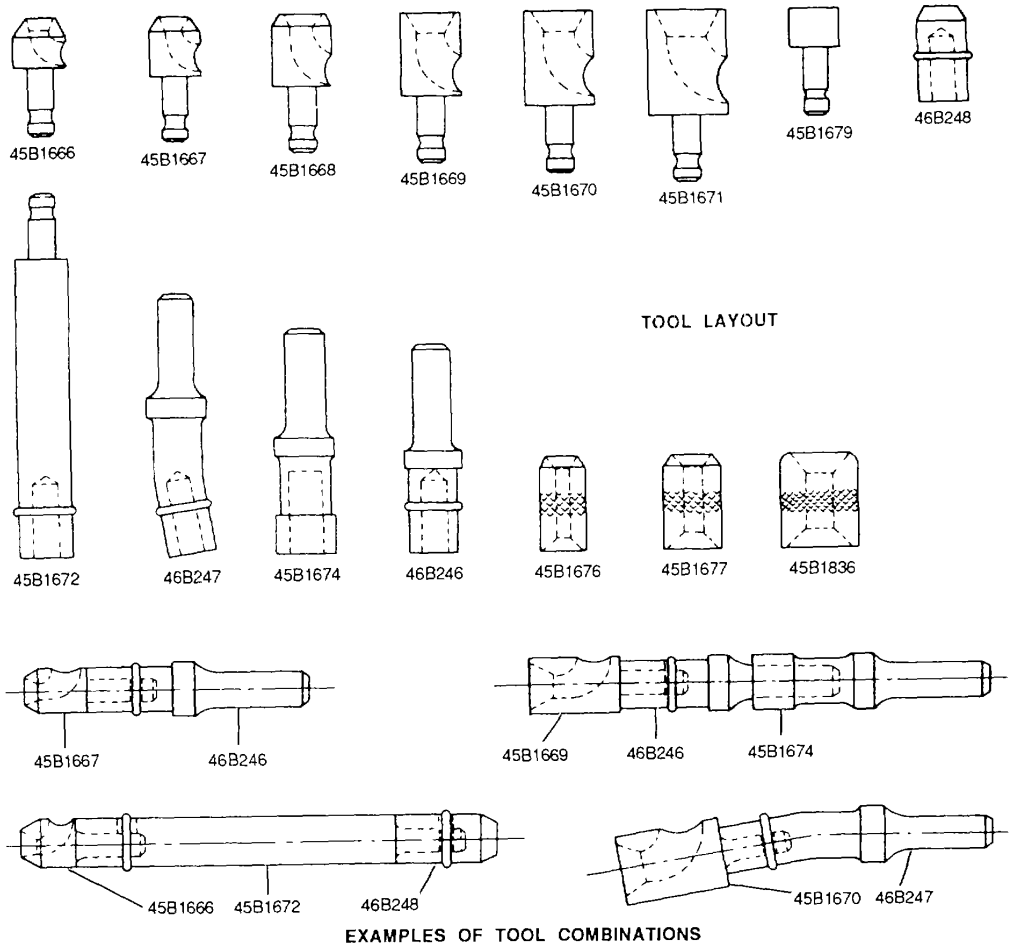

Figure 7-63. Hi-Shear Rivet Sets

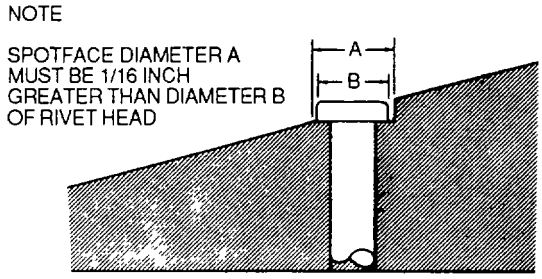

Figure 7-64. Spotfacing

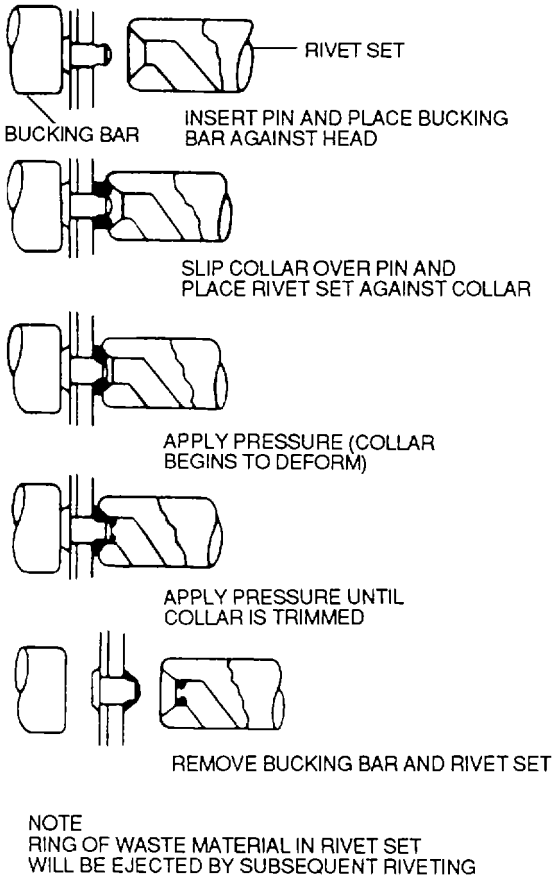

Figure 7-65. Driving Hi-Shear Rivet

(a) Place a flush set In rivet gun, and place set against head of rivet.

(b) Slip collar over extending end of rivet.

(c) Place Hi-shear rivet set in special bucking bar and place set against collar.

(d) Apply pressure from head end until rivet is formed and excess collar material is sheared off.

e. *Inspection.* See figure 7-66 for inspection criteria

f. *Removal Procedures.* Use conventional method of removing rivets by drilling off head on either end of Hi-shear rivet. Center punch prior to applying drilling pressure. Under certain circumstances, use alternate methods outlined below, as they may in such instances be superior to drilling.

(1) Grind a chisel edge on a small pin punch so that blade width does not exceed 1/8 inch.

(2) Apply this tool at right angles to aluminum alloy collar and drive chisel with hammer until collar is split In two pieces, preferably 180 degrees apart.

(3) Use chisel blade to pry collar from groove in stud.

(4) Tap stud out of hole.

(5) Use a special hollow punch having one or more blades arranged to spilt collar to pry collar from groove in stud.

(6) Tap stud out of hole.

(7) Grind a pair of standard nippers so that cutting blades will cut collar in two pieces, or use nippers at right angles to rivet stud, and cut rivet through small neck.

(8) Use a hollow milling tool or spotfacing tool without a pilot and an electric, air, or hand drill to cut away enough of collar to allow stud to be driven out.

(9) Drive out stud with a sharp tap of a hammer.

7-11. Olympic Blind Rivets. Olympic rivets are blind rivets designed for difficult riveting jobs where access is available to only one side of the work. These rivets consist of a hollow manufactured rivet and a stem.

a. *Identification.* Olympic rivets are identified by the Olympic part number and by a National Aerospace Standard (NAS) part number. The NAS number

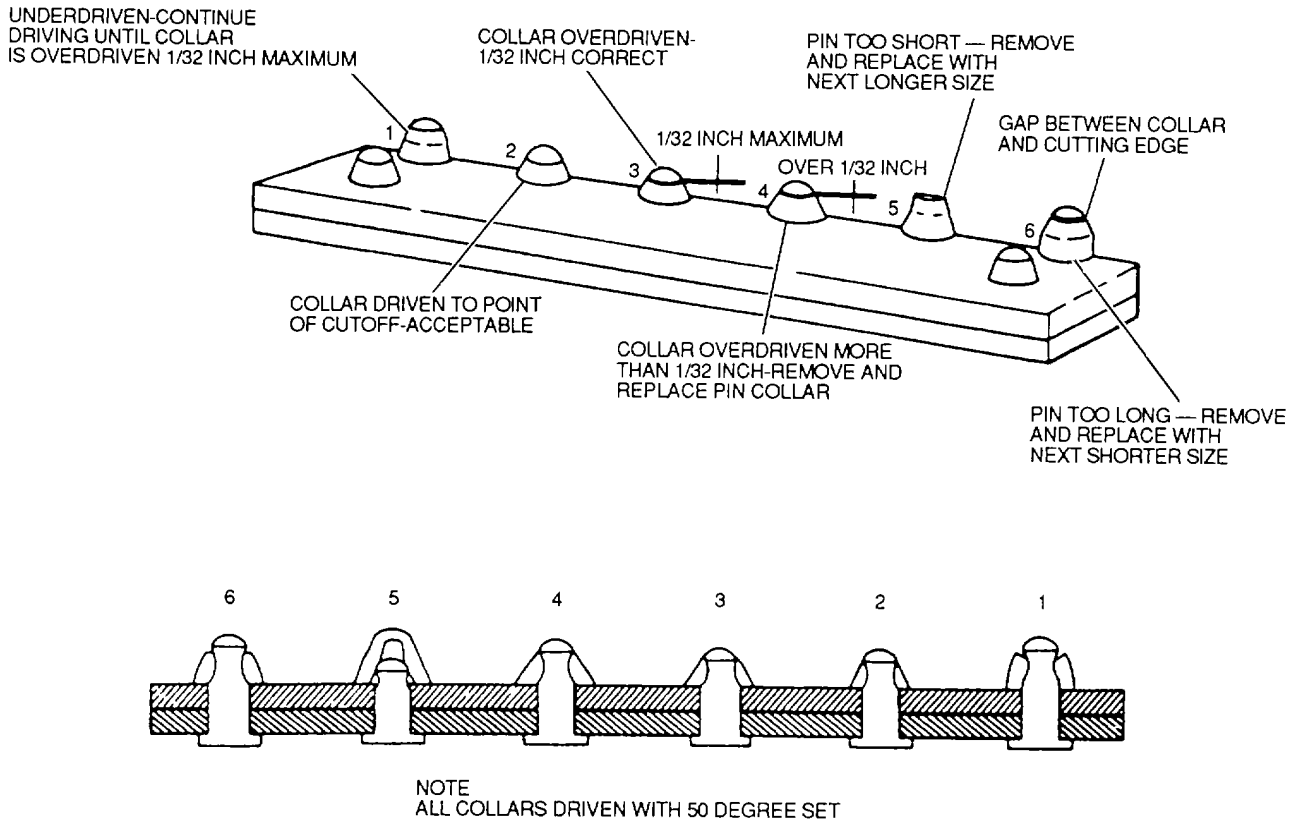

Figure 7-66. Hi-Shear Rivet Inspection

indicates the head style and whether the stem is standard or bulbed (see figure 7-67). The following list shows these specification numbers.

SPECIFICATION	HEAD STYLE/STEM STYLE
NAS 1398	Protruding/standard
NAS 1399	Countersunk/standard
NAS 1768	Protruding/bulbed
NAS 1769	Countersunk/bulbed

(1) Material codes. The material codes following the specifications above are as shown in table 7-19.

(2) Dash numbers. The following paragraphs explain the dash numbers.

(a) First dash number. The first dash number indicates the rivet diameter in 1/32 inch.

(b) Second dash number. The second dash number denotes the nominal grip length in 1/16 inch.

(3) Cross reference. The Olympic part number reflects the head style and the material of the rivet. The same dash numbers are added to this part number. Table 7-20 shows the cross reference between the NAS numbers and the Olympic part numbers.

b. Grip Range. Table 7-21 shows the grip range of the most commonly used Olympic rivets (see figure 7-68).

c. Hole Size Limits. When drilling for Olympic rivets, ensure that the hole is within the limits specified in table 7-22.

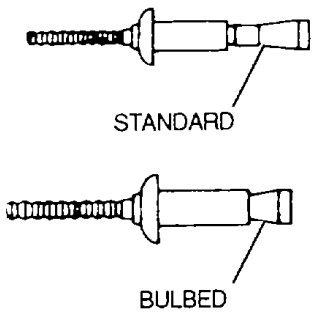

Figure 7-67. Olympic Rivet Stem Styles

d. Drilling. In drilling material, follow standard drilling procedure. Ensure that proper drill size is selected, that drill is clean and sharp, and that drill is held at a 90-degree angle to work. Do not force drill through material. See figure 7-69 for proper drilling illustrations, and observe the following precautions:

- To ensure proper hole alignment, hold sheets together firmly when drilling. Remove all foreign substances from between sheets.
- Remove burrs before installation of rivet, as presence of burrs will prevent head from seating properly, keep sheets apart, and result in a poor structural assembly.

e. Installation. Installation procedures for Olympic rivets are contained in the following paragraphs.

(1) Tools. Olympic blind rivets can be installed with most hand or pneumatic blind rivet guns now in use, provided the gun is equipped with a pulling head designed to upset straight stem blind rivets, as shown in figure 7-70.

(2) Procedure. The following procedure will be used to install Olympic rivets (see figure 7-71):

(a) Place rivet in hole and apply head to stem, or place stem in pulling head and insert rivet in hole.

NOTE

Ensure that the sheets are held firmly together before the rivet is upset.

Table 7-19. Olympic Rivet Material Codes

Material	Code
2017 Aluminum alloy [1]	D
5056 Aluminum alloy [1]	B
Monel, cadmium-plated [2]	MW
Monel, unplated [3]	M
A-286 Corrosion-resistant steel [4]	C

[1] Temperature limitation 250°F (120°C) maximum

[2] Temperature limitation 400°F (205°C) maximum

[3] Temperature limitation 900°F (485°C) maximum

[4] Temperature limitation 1200°F (650°C) maximum

Table 7-20. Olympic Rivet Part Number Cross Reference

NAS part number	Olympic part number	Description
NAS 1398D-	RV 1200-	Protruding/2017 aluminum alloy
NAS 1398B-	RV 1250-	Protruding/5056 aluminum alloy
NAS 1398MW-	RV 1290-	Protruding/Monel, cadmium-plated
NAS 1398C-	RV 1240-	Protruding/corrosion-resistant steel
NAS 1398M-	RV 1290M-	Protruding/Monel, unplated
NAS 1399D-	RV 1201-	Countersunk/2017 aluminum alloy
NAS 1399B-	RV 1251-	Countersunk/5056 aluminum alloy
NAS 1399C-	RV 1241-	Countersunk/corrosion-resistant steel
NAS 1399MW-	RV 1291-	Countersunk/Monel, cadmium-plated
NAS 1399M-	RV 1291M-	Countersunk/Monel, unplated
NAS 1768D-	RV 1100-	Universal/5056 aluminum alloy
NAS 1768MW-	RV 1190-	Universal/Monel, cadmium-plated
NAS 1768M-	RV 1190M-	Universal/Monel, unplated
NAS 1769D-	RV 1101-	Countersunk/5056 aluminum alloy
NAS 1769M-	RV 1191M-	Countersunk/Monel, unplated
NAS 1769MW-	RV 1191-	Countersunk/Monel, cadmium-plated

Table 7-21. Grip Range for Olympic Rivets

Second dash number	Minimum (inch)	Maximum (inch)
-1	0.015 (1/64)	0.063 (1/16)
-2	0.063 (1/16)	0.125 (1/8)
-3	0.125 (1/8)	0.188 (3/16)
-4	0.188 (3/16)	0.250 (1/4)
-5	0.250 (1/4)	0.313 (5/16)
-6	0.313 (5/16)	0.375 (3/8)
-7	0.375 (3/8)	0.438 (7/16)
-8	0.438 (7/16)	0.500 (1/2)

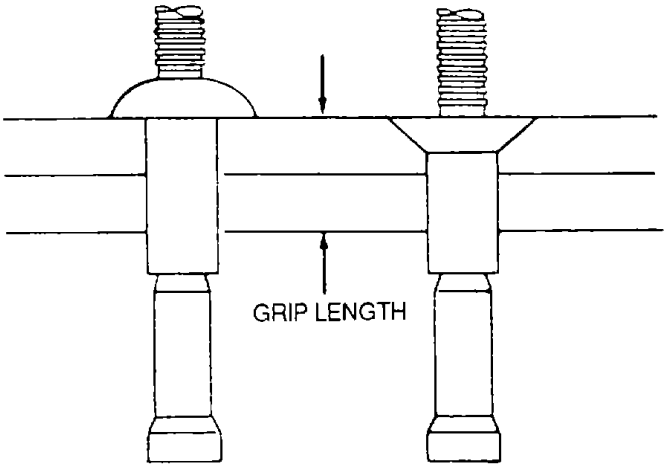

Figure 7-68. Olympic Rivet Grip Length

Table 7-22. Hole Size Limits for Olympic Rivets

Rivet shank diameter (inch)	First dash number	Drill	Limits (inch)
3/32	-3	No. 40	0.097-0.101
1/8	-4	No. 30	0.120-0.132
5/32	-5	No. 20	0.160-0.164
3/16	-6	No. 10	0.192-0.196

(b) Hold gun so that pulling head is parallel to axis of rivet.

CAUTION

- **Do not allow head to drop, as it may cock the stem and the manufactured head of the rivet will be cocked in the upsetting process.**
- **Excessive pressure exerted against the work may bend or buckle sheets.**

(c) Upset rivet, exerting firm pressure against work.

(d) Remove portion of stem remaining above manufactured head by manually trimming with flat ground nippers, power trimmers, or by spin trimming.

(e) Countersunk rivets may be shaved after trimming when aerodynamic smoothness is required.

f. Inspection. There should be no evidence of rotation of rivets or looseness of riveted parts. After trimming operation, examine for tightness and apply a force of 10 pounds to trimmed stem. A tight stem is one

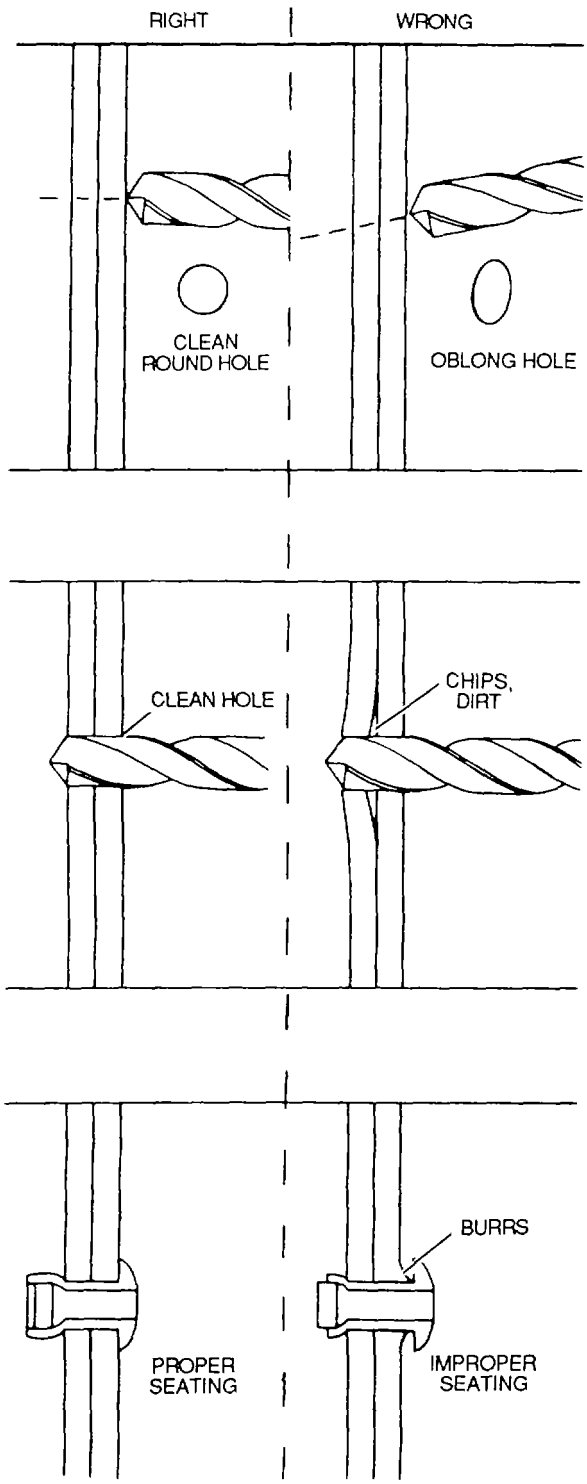

Figure 7-69. Drilling Material.

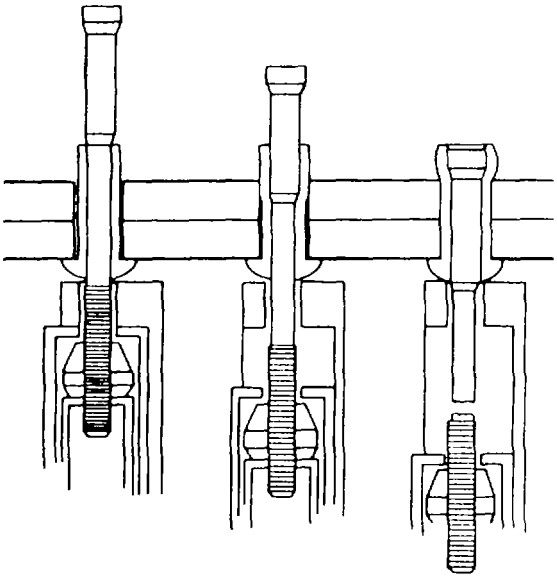

Figure 7-70. Olympic Rivet Pulling Head Operation

indication of an acceptable rivet Installation. Any degree of looseness indicates an oversize hole and requires replacement of rivet with an oversize shank diameter rivet. A rivet installation will be assumed satisfactory when the rivet head is seated snugly against the item to be retained (0.005-inch feeler gauge should not go under rivet head for more than one-half the circumference) and the stem is proved tight.

g. *Removal*. Should it be necessary to remove an improperly installed rivet, the following procedure will be followed (see figure 7-72):

(1) Use a punch to drive out stem.

(2) Drill through head of rivet only, using manufactured drilled hole in rivet as a pilot . Drill should be same size as rivet shank.

(3) Pry head off rivet with a punch.

(4) Push out remainder of rivet shank with a punch the same diameter as rivet shank. When shank will not push out, drill it out. Avoid enlarging hole when drilling out shank. Use an oversize shank or next larger diameter rivet when hole diameter is enlarged.

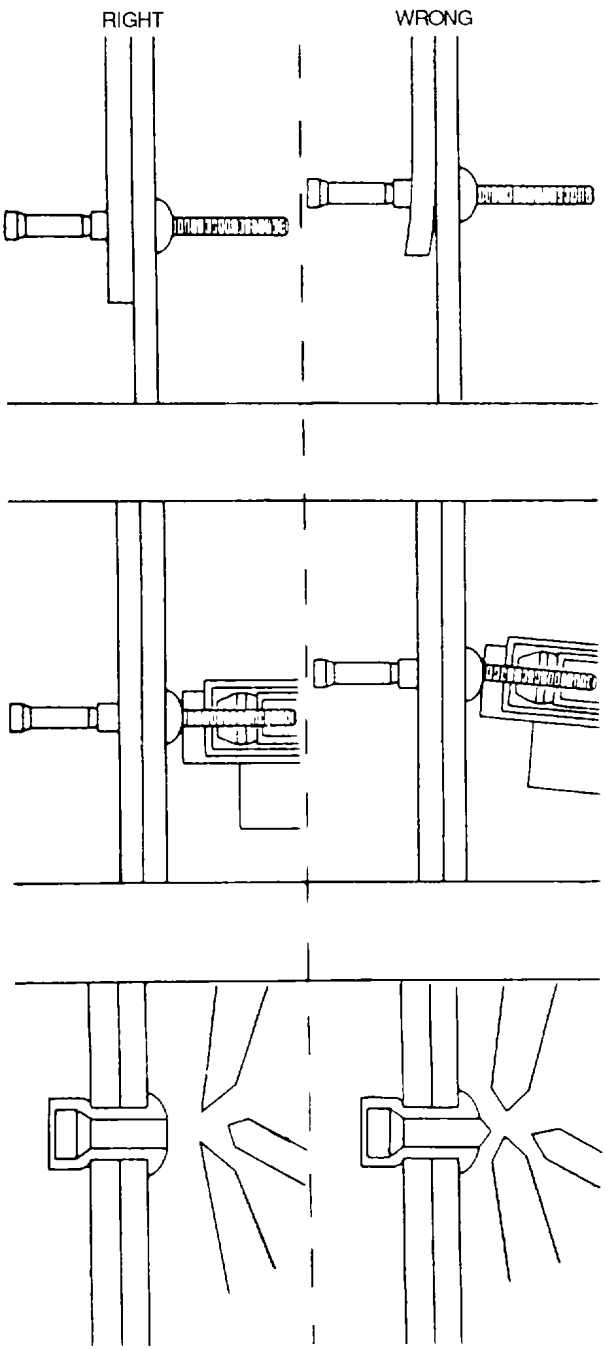

Figure 7-71. Installation of Olympic Rivets

7-12. Huck Lockbolts. The lockbolt is a form of bolt, combining the features of both a high strength bolt and a rivet, with advantages over each. The lockbolt is generally used in wing splice fittings, landing gear fittings, fuel cell fittings, longerons, beams, skin splice

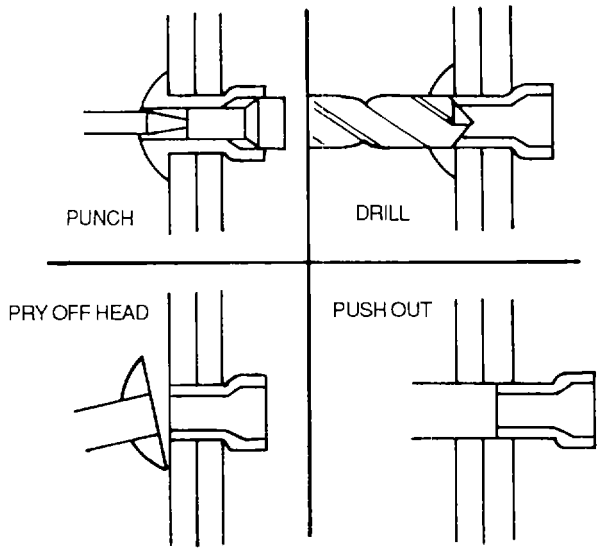

Figure 7-72. Removing Olympic Rivet

plates, and other major structural attachments it is easier and more quickly installed than the conventional rivet or bolt and eliminates the use of lockwashers, cotter pins, and special nuts. Like the rivet, the lockbolt requires a pneumatic hammer or pull gun for installation. When installed, the lockbolt is rigidly and permanently locked in place.

a. *Types*. Three types of lockbolts, shown in figure 7-73, are commonly used.

(1) Pull type. The pull-type lockbolt is mainly used in aircraft and primary and secondary structure. It is installed very rapidly and has approximately one-half the weight of equivalent AN steel bolts and nuts. A special pneumatic pull gun is required for installation of this type lockbolt, which can be performed by one operator since buckling is not required.

(2) Stump-type. The stump-type lockbolt, although not having the extended stem with pull grooves, is a companion fastener to the pull-type lockbolt. It is used primarily where clearance will not permit effective installation of the pull-type lockbolt. It is driven with a standard pneumatic riveting hammer, with a hammer set attached for swaging the collar into the pin locking grooves, and a bucking bar.

(3) Blind-type. The blind-type lockbolt comes as a complete unit or assembly and has exceptional strength and sheet pull-together characteristics. Blind lockbolts are used where only one side of the work is

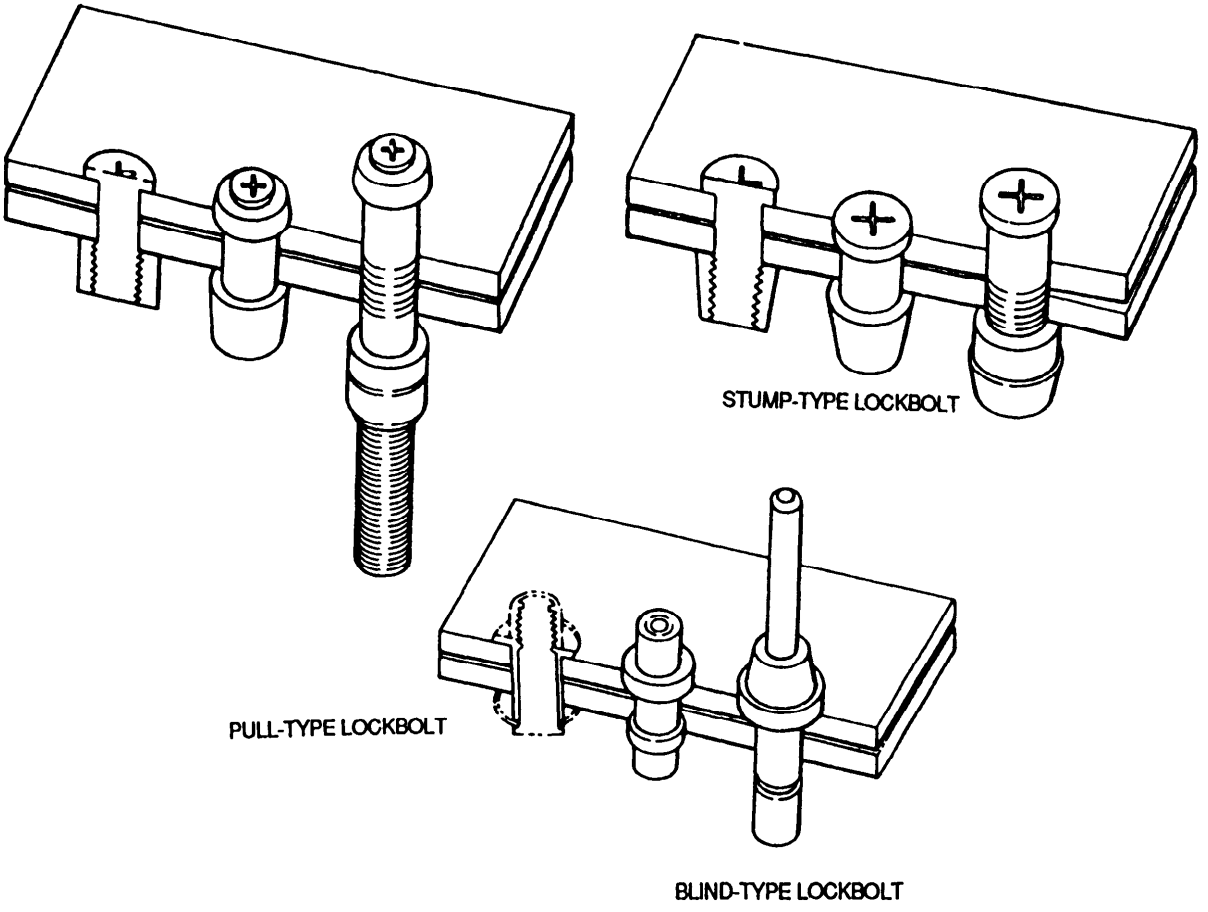

Figure 7-73. Types of Lockbolts

accessible and generally where it is difficult to drive a conventional rivet. This type lockbolt is installed in a manner similar to the pull-type lockbolt.

NOTE

Blind lockbolts are not to be used in places where the backup sheet is 0.020 inch thick or less.

b. Materials. The pins of pull-and stump-type lockbolts are made of heat-treated alloy steel or high-strength aluminum alloy. Companion collars are made of aluminum alloy or mild steel. The blind lockbolt consists of a heat-treated alloy steel pin, blind sleeve, filler sleeve, mild steel collar, and carbon steel washer.

c. Substitution. There are authorized applications where certain lockbolts may be used to replace other hardware.

(1) General. Alloy steel lockbolts may be used to replace steel Hi-shear rivets, solid steel rivets, and AN bolts of the same diameter and head type. Aluminum alloy lockbolts may be used to replace 7075-T aluminum alloy Hi-shear rivets and solid aluminum alloy rivets of the same diameter and head type. Steel and aluminum alloy lockbolts may also be used to replace steel and 2024-T aluminum alloy bolts of the same diameter, respectively. Blind-type lockbolts may be used to replace solid aluminum alloy rivets, stainless steel rivets, and all blind rivets of the same diameter.

(2) Shear applications. For shear applications, the blind-type lockbolt may be used to replace aluminum alloy or steel AN bolts, AN screws, and Hi-shear rivets of the same diameter.

d. Identification. Tables 7-23 through 7-26 illustrate the part numbering systems for the three types of lockbolts and collars.

e. Selection. Selection of the proper lockbolt involves the diameter and grip range required for a specific application.

(1) Diameters. Pull- and stump-type lockbolts are available in 3/16-, 1/4-, 5/16-, and 3/8-inch diameters with modified brazier, pan, and countersunk heads. Blind-type lockbolts are available in oversize ¼- and 5/16-inch diameters.

(2) Determining proper grip range. The bolt grip range required for any application should be determined by measuring the thickness of the material with a hook scale through the hole. The measurement should be made with the parts clamped and include variations due to tolerances in sheet thickness, primer, possible slight burrs resulting from the drilling process, and any spaces existing between the sheets due to irregularities in contour. Refer to tables 7-27 and 7-28 for grip ranges of pull- and stump-type and blind-type lockbolts, respectively.

f. Installation Tools. Figures 7-74 and 7-75 show the rivet pull guns which are used to install pull- and blind-type lockbolts. Tools for installing stump-type lockbolts are referred to in table 7-28.

g. Installation Procedures. Installation of lock-bolts involves proper drilling and installation.

(1) Drilling. Table 7-30 shows the drill dimensions for pull- and stump-type lockbolts. Table 7-31 shows the dimensions for blind-type lockbolts. Holes must be round and within these given tolerances.

Table 7-23. Pull-Type Lockbolt Numbering System.

NAS 1456 - 08

The number after the dash designates nominal grip in 1/16" increments.

Pin, swage locking, alloy steel, .190 dia., 100° flush head (MS24694), pull type, Type II cadmium plate.

NAS 1456N08	.190 dia steel pin, 100° flush head (MS24694), pull type, .500 grip nickel-cadmium plate.
NAS1456H08	.190 dia steel pin, 100° flush head (MS24694), sealant escape groove, pull type, .500 grip, Type II cadmium plate.
NAS 1456HN08	.190 dia steel pin, 100° flush head (MS24694), sealant escape groove, pull type, .500 grip, nickel-cadmium plate.
NAS 1456-08A	.203 dia steel pin, 100° flush head (MS24694), pull type, .500 grip, type II cadmium plate, oversize shank diameter.
NAS 1456N08A	.203 dia steel pin, 100° flush head (MS24694), pull type, .500 grip, nickel-cadmium plate, oversize shank diameter.
NAS 1456H08A	.203 dia steel pin, 100° flush head (MS24694), sealant escape grove, pull type, .500 grip, type II cadmium plate, oversize shank diameter.
NAS 1456HN08A	.203 dia steel pin, 100° flush head (MS24694), sealant escape grove, pull type, .500 grip, nickel-cadmium plate, oversize shank diameter.

Table 7-24. Stump-Type Lockbolt Numbering System

(H)	GPS	3SC	-	DT	08	-	06	
								.375 inch grip length
								.250 inch shank diameter
								8740 alloy steel
								Low profile 100o flush head, for shear applications.
								Family of GP stumps for aerospace applications
								Add prefix “H” to part number if sealant escape groove is required.

The first set of letters designate the family of GP stumps or tension applications (GPS).
The second set of letters & numbers (3SC) designate the head size, style and load application.
The next letter “DT” is the material designated for 8740 alloy steel, min. shear strength 95 KSI.
The letter “V” is the material designator for 6AL-4V titanium alloy, min. shear strength 95 KSI.
The numbers following the material designator designates the nominal stump shank diameter in .0312 inch increments.
The final number(s) designates the grip length number or the nominal stump shank length in .0625 inch increments.

Table 7-25. Blind-Type Lockbolt Numbering System

B100	-	T	8	-	6	
						Grip Number in 1/16th inch
						Dia. Number in 1/32nd inch.
						T = 112 ksi shear alloy steel EU = 95 ksi shear A-286 CRES
						B100 = 100° flush head BP = Protruding head

The letter “O” preceding part number indicates 1/64” oversize, single action installation. Example: OB100-T8-6.

Table 7-26. Lockbolt Collar Numbering System

NAS 1080 AT 06

- 06 — Nominal fastener diameter in 1/32 inch
- AT — (Material) AT = 2219 aluminum
- NAS 1080 — Collar, huckbolt swage locking for pull and stump type

PIN SWAGE LOCKING
TENSION PULL & STUMP-TYPE

NAS 1080 COLLAR SELECTION		
CODE	MATERIAL	
–		
P	2024 ALUMINUM	
AP		
AT	2219 ALUMINUM	
MG		
MK	MONEL	
UG		
UK	A-286 CRES	

PIN SWAGE LOCKING
TENSION STUMP-TYPE

NAS 1080 COLLAR SELECTION				
CODE	MATERIAL		CODE	MATERIAL
—	2024 ALUMINUM		R	CARBON STEEL
AT	2219 ALUMINUM			
D	6061 ALUMINUM			
NOT APPLICABLE			MG	MONEL
			MK	
			UG	A-286 CRES
			UK	

PIN SWAGE LOCKING
TENSION PULL-TYPE

NAS 1080 COLLAR SELECTION				
CODE	MATERIAL		CODE	MATERIAL
—	2024 ALUMINUM		R	CARBON STEEL
P				
AP				
AT	2219 ALUMINUM			
D	6061 ALUMINUM			
NOT APPLICABLE			MG	MONEL
			MK	
			UG	A-286 CRES
			UK	

PIN SWAGE LOCKING
TENSION PULL & STUMP-TYPE

NAS 1080 COLLAR SELECTION		
CODE	MATERIAL	
—		
P	2024 ALUMINUM	

PIN SWAGE LOCKING
SHEAR PULL & STUMP TYPE

NAS 1080 ( ) COLLAR SELECTION				
CODE	MATERIAL		CODE	MATERIAL
C06 THRU C12	2024 ALUMINUM		(NOT APPLICABLE)	
C05	2024 ALUMINUM		MG	MONEL
G			MK	
AG	2219 ALUMINUM		UG	A-286 CRES
			UK	

PIN SWAGE LOCKING
SHEAR PULL & STUMP TYPE

NAS 1018 ( ) COLLAR SELECTION				
CODE	MATERIAL		CODE	MATERIAL
C06 THRU C12	2024 ALUMINUM		E06 THRU E12	CARBON STEEL
C04 C05	2024 ALUMINUM		E04 E05	CARBON STEEL
G			MG	MONEL
AG	2219 ALUMINUM		MK	
			UG	A-286 CRES
			UK	

PIN SWAGE LOCKING
SHEAR/TENSION PULL-TYPE

NAS 1080 COLLAR SELECTION		
CODE	MATERIAL	
K	2024 ALUMINUM	
MK	MONEL	
UK	A-286 CRES	

Table 7-27. Grip Range for Pull- and Stump-Type Lockbolts

Pin Grip Lengths							
Grip Dash No.	Nom Grip	Material Thickness Range		Grip Dash No.	Nom Grip	Material Thickness Range	
		Min.	Max.			Min.	Max
01	.062	.031	.094	17	1.062	1.032	1.094
02	.125	.095	.156	18	1.125	1.095	1.156
03	.188	.157	.219	19	1.188	1.157	1.219
04	.250	.220	.281	20	1.250	1.220	1.281
05	.312	.282	.344	21	1.312	1.282	1.344
06	.375	.345	.406	22	1.375	1.345	1.406
07	.438	.407	.469	23	1.438	1.407	1.469
08	.500	.470	.531	24	1.500	1.470	1.531
09	.562	.532	.594	25	1.562	1.532	1.594
10	.625	.595	.656	26	1.625	1.595	1.656
11	.688	.657	.719	27	1.688	1.657	1.719
12	.750	.720	.781	28	1.750	1.720	1.781
13	.812	.782	.844	29	1.812	1.782	1.844
14	.875	.845	.906	30	1.875	1.845	1.906
15	.938	.907	.969	31	1.938	1.907	1.969
16	1.000	970	1.031	32	2.000	1.970	2.031

Table 7-28. Grip Range for Blind-Type Lockbolts

Grip No.	Grip Range		Grip No.	Grip Range	
	Min.	Max.		Min.	Max.
02	.094	.157	17	1.031	1.095
03	.156	.220	18	1.094	1.157
04	.219	.282	19	1.156	1.220
05	.281	.345	20	1.219	1.282
06	.344	.407	21	1.281	1.345
07	.406	.470	22	1.344	1.407
08	.469	.532	23	1.406	1.470
09	.531	.595	24	1.469	1.532
10	.594	.657	25	1.531	1.595
11	.656	.720	26	1.594	1.657
12	.719	.782	27	1.656	1.720
13	.781	.845	28	1.719	1.782
14	.844	.907	29	1.781	1.845
15	.906	.970	30	1.844	1.907
16	.969	1.032	31	1.906	1.970
			32	1.969	2.032

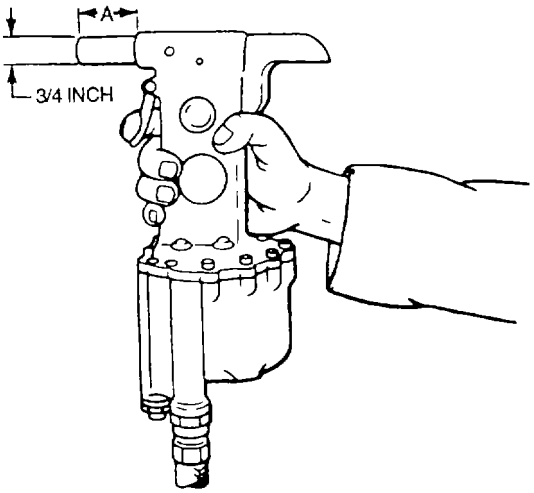

BLIND	PULL						WEIGHT: 8 POUNDS
LOCK BOLT DIA. (INCH)	LOCK BOLT DIA. (INCH)	STANDARD NOSE	A (INCH)	SHORT NOSE	A (INCH)	LONG NOSE	A (INCH)
1/4	3/16	92210	2	92210	1 3/32	92223	3 1/2
	1/4	92214	2	92386	1 3/32	92216	3 1/2

Figure 7-74. Pull- and Blind- Type Aluminum Lockbolt Rivet Gun

(2) Installation procedure. This paragraph describes the procedures for installing the three types of lockbolts.

(a) Pull-type. Installation of the pull-type lockbolt is automatic and continuous in the following sequence (see figure 7-76).

1 Insert pin from one side of work, place locking collar over extending lockbolt pin tail.

2 Apply gun, chuck jaws automatically engage pull grooves of extending pin tail.

3 Depress gun trigger, thus causing a pull to be exerted on the pin, pulling the collar against the swaging anvil and drawing the work tightly together. After the faying surfaces are In close contact, the pin is pulled into an interference or clearance fit hole. As the pull on the pin increases, the anvil of the tool is drawn over the collar, swaging the collar into locking grooves of the pin to form a rigid, permanent lock. Continued buildup of force automatically breaks the lockbolt pin in tension at the breakneck groove and the pin tail is automatically ejected. When the gun piston returns to its initial forward position, the ejector advances to disengage anvil from swaged collar.

(b) Stump-type. To drive the stump-type lockbolt, see figure 7-77 and proceed as follows:

1 Insert pin from one side of work. Ensure pin fills hole as stump pins of alloy steel do not expand to fill over-size holes.

2 Slip lockbolt collar over extending locking grooves of pin then place a bucking bar against head of pin.

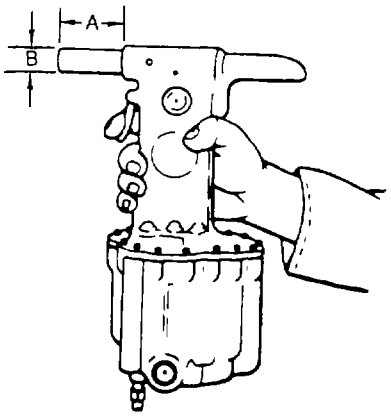

WEIGHT 11 POUNDS

BLIND	PULL									
LOCK BOLT DIA (INCH)	LOCK BOLT DIA (INCH)	STANDARD NOSE	A (INCH)	B (INCH)	LONG NOSE	A (INCH)	B (INCH)	ADAPTER NOSE	A (INCH)	B (INCH)
1/4	3/16							92231	2 3/4	3/4
5/16	1/4	92232	2 11/16	1 1/16	92232	4 3/16	1 1/16	92232 99-609	3 1/16 1 15/16	3/4 3/4
	5/16	99-99	2 11/16	1 1/16	92230	4 3/16	1 1/16			
	3/8	99-100	2 11/16	1 1/16	92386	4 3/16	1 1/16			

Figure 7-75. Pull- and Blind- Type Steel Lockbolt Rivet Gun

NOTE

Be sure sheets are clamped firmly together to avoid sheet separation.

3 Place swaging set over collar, align it with pin and apply driving pressure until soft collar is forced into locking grooves of extended stump shank. If possible, hold drive set and gun 90 degrees to face of work.

4 Continue to apply pressure until head is fully formed. The straight positions of the shank will be flush or protrude not more than 1/32 inch from the work.

5 Lockbolt stump collars can be driven on a surface not exceeding 7 degrees from a perpendicular with axis of hole. The manufactured head of the lockbolt stump must be driven on a surface perpendicular with axis of hole. Spotface for other conditions.

(c) Blind-type. Installation of the blind-type lockbolt is generally the same as for the pull-type. See figure 7-78 for installation Instructions.

h. Inspection. The lockbolt collar should be swaged substantially throughout the complete length of the collar. The tolerance of the broken end of pin relative to top of collar shall be within the dimensions shown as follows:

- 3/16 inch diameter pin - 0.079 inch below to 0.032 inch above
- 1/4 inch diameter pin - 0.079 inch below to 0.050 inch above
- 5/16 inch diameter pin - 0.079 inch below to 0.050 inch above
- 3/8 inch diameter pin - 0.079 inch below to 0.060 Inch above.

Table 7-29. Standard Tools for Stump-Type Lockbolts

Stump-type lockbolt size (in.)	Swaging set: Huck part no.	Swaging set: Shank size (in.)	Swaging set: Length (in.)	Applicable air hammers: Fed Spec 00-R-421 Class 2, Size 3	Applicable air hammers: Fed Spec 00-R-421 Class 2, Size 4	Applicable air hammers: Fed Spec 00-R-421 Class 2, Size 5
3/16	915-1-6A	0.401	2 3/8	x		
1/4	915-1-8A	0.498	2 3/8		x	
3/8	915-1-12A	0.498	3 1/2			x

Table 7-30. Drilling Procedures for Pull- and Stump-Type Lockbolts

Bolt diameter (inch)	Predrill: Drill	Predrill: Diameter (inch)	Drill size: Drill	Drill size: Diameter (inch)	Hole tolerance (inch)
Clearance Fit Application					
3/16	18	0.1695	11	0.191	0.191-0.203
1/4	1	0.228	1/4	0.250	0.250-0.265
5/16	L	0.290	5/16	0.312	0.312-0.330
3/8	11/32	0.343	3/8	0.375	0.375-0.395
Interference Fit Application					
3/16	18	0.169	13	0.185	0.185-0.187
1/4	1	0.228	C	0.242	0.242-0.246
5/16	L	0.290	N	0.302	0.302-0.306
3/8	11/32	0.343	U	0.368	0.368-0.371

Table 7-31. Drilling Procedures for Blind-Type Lockbolts

Bolt diameter (inch)	Predrill: Drill	Predrill: Diameter (inch)	Drill size: Drill	Drill size: Diameter (inch)	Hole tolerance (inch)
1/4	D	0.246	G	0.261	0.261-0.265
5/16	21/64	0.328	S	0.348	0.348-0.352

i. *Removal*. When removal of a lockbolt becomes necessary, remove collar by splitting axially with a sharp cold chisel. Exercise care not to break out or deform hole. Use of a backup bar on opposite side of collar being spilt is recommended. The pin may then be driven out with a drift.

NOTE

If the lockbolt is carefully removed, another lockbolt of the same diameter may be used as a replacement, since the hole is enlarged only slightly. It is possible to make several replacements in the same hole and still maintain an interference fit.

7-13. Jo-Bolts. Jo-Bolts are high-strength structural blind fasteners used in close tolerance holes where assembly does not allow installation of AN, NAS, or MS bolts. They are sometimes used when saving weight is a factor. However, Jo-Bolts are always considered part of the permanent structure and are primarily subject to shear loads. When Installed as a unit, Jo-Bolts consist of a bolt, a nut, and a sleeve.

a. *Head Types*. Jo-Bolts are identified by head type. There are three head types available.

(1) Flush head. Shown in figure 7-79, this type of Jo-Bolt usually fits the same size countersink or dimple that is required for the corresponding size of MS 24694 screw head or an MS 20426 rivet. The nut and bolt are made of alloy steel and the sleeve of annealed corrosion-resistant steel. All components are cadmium-plated.

(2) Hexhead. The hex head Jo-Bolt, as shown in figure 7-80, Is used where surface smoothness or clearance is not a critical factor. It has an alloy steel bolt and an annealed corrosion-resistant sleeve. The bolt and sleeve are both cadmium-plated.

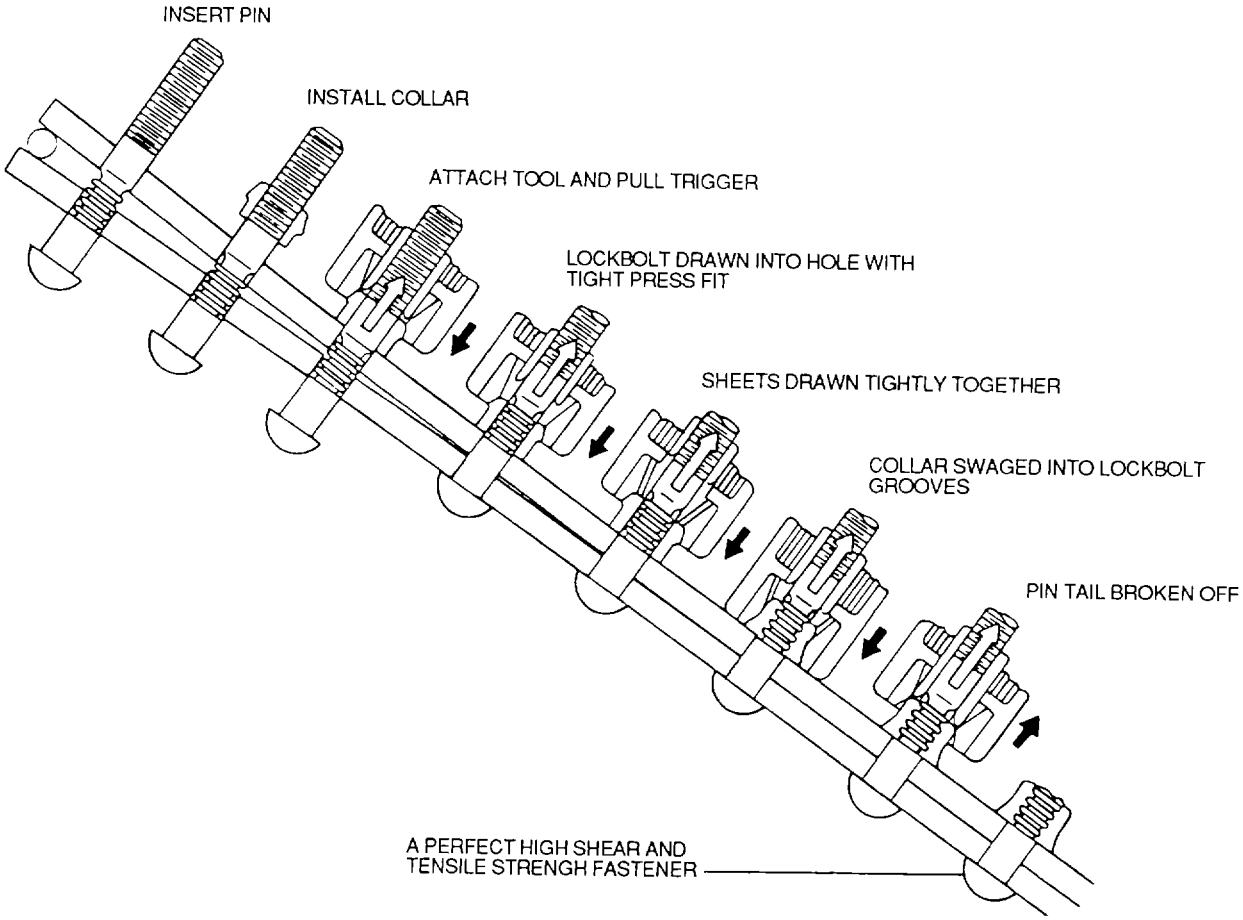

Figure 7-76. Installation of Pull-Type Lockbolt

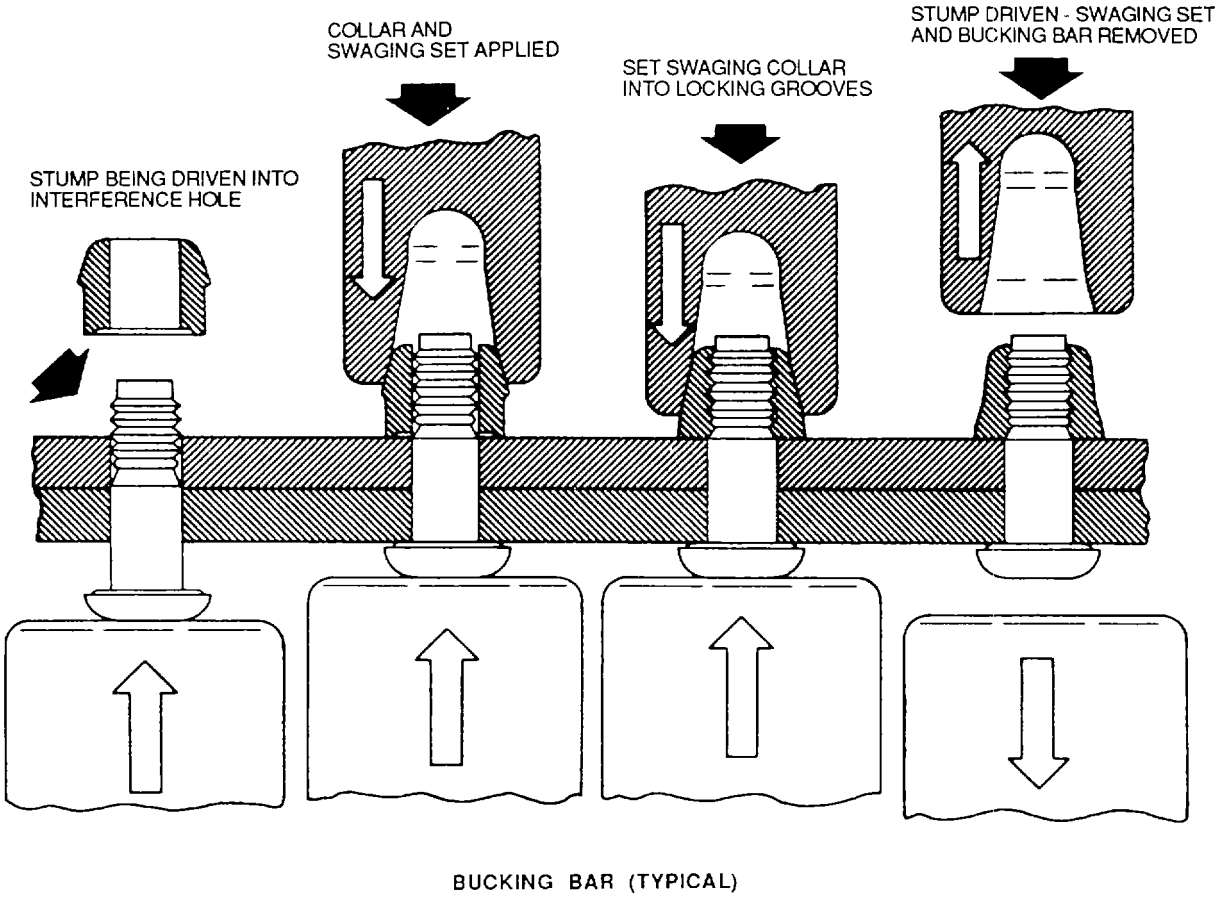

Figure 7-77. Installation of Stump-Type Lockbolt

(3) Millable hex head. This type of Jo-Bolt, shown in figure 7-81, normally takes the same size countersink or dimple that is required for the corresponding size MS20426 rivet. This bolt is made of alloy steel, and the sleeve is made of corrosion-resistant steel. Both are cadmium-plated. The nut is aluminum alloy. After installation, the nut head is milled flush.

b. Identification. Figure 7-82 contains the basic part numbers for the flush head, hex head, and millable hex head Jo-Bolts, in both standard and oversize types. Figure 7-83 shows the grip lengths. These figures should be used together to determine the size of Jo-Bolt required for a specific application.

c. Sizes. Figures 7-84 through 7-86 show the dimensions of each size and type of Jo-Bolt available.

d. Uses. The high shear and tension strength of Jo-Bolts makes them especially suitable for use in high stress areas where other blind fasteners would not be practical. They are used in areas that do not often require replacement or servicing. Because Jo-Bolts are three-part fasteners, they should not be used where any loose part could be drawn into the engine air Intake.

e. Hole Preparation. The size hole and countersink diameter used when installing Jo-Bolts are given in table 7-32. Exceptions to this are, where specified differently in repair procedures, or when replacing existing fasteners. For the installation of flush head Jo-Bolts, the sheet shall be dimpled or machine countersunk. Machine countersinks and dimples that receive the head of the Jo-Bolt shall have a 100 degree included angle and shall be deep enough so the head fits flush.

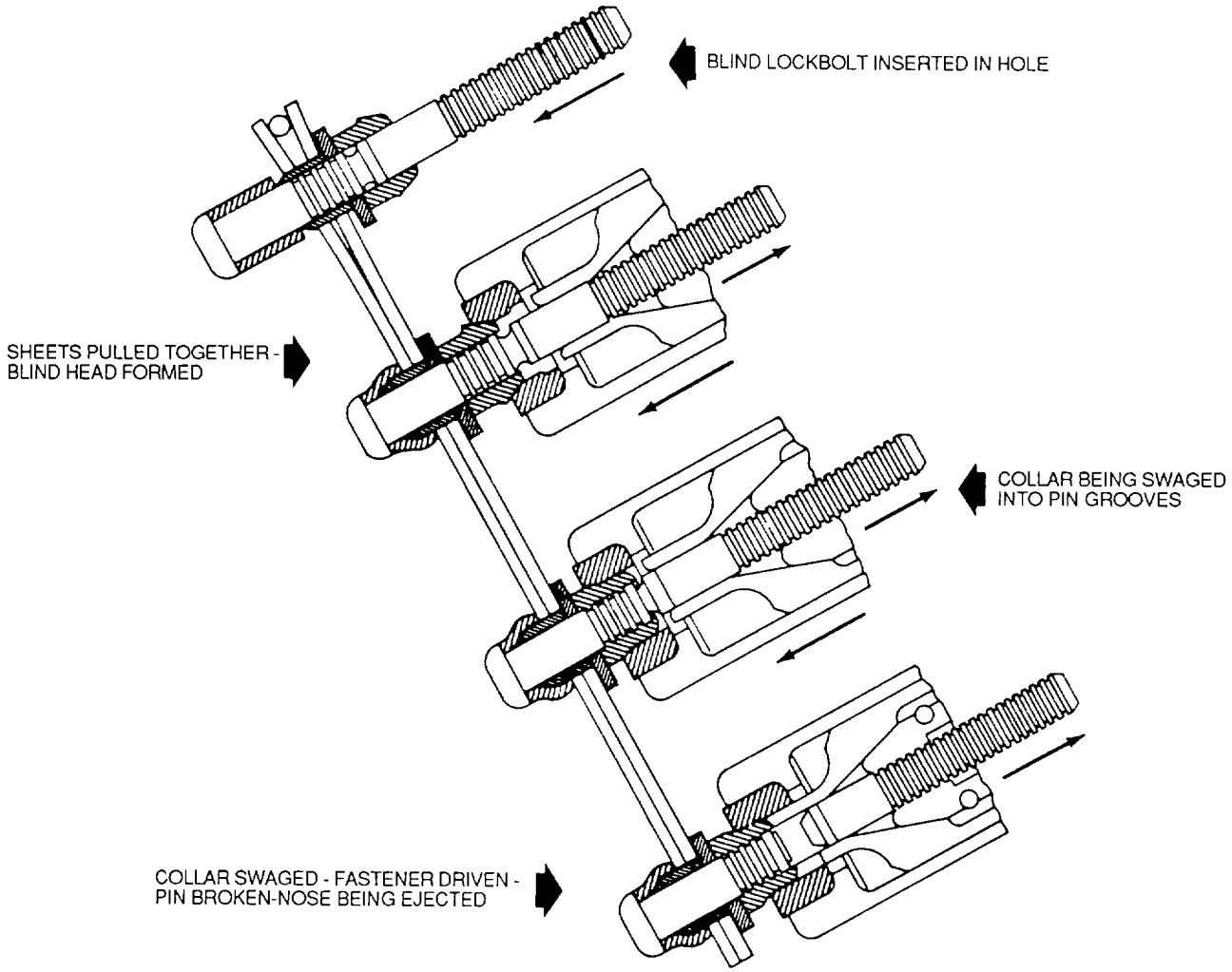

Figure 7-78. Installation of Blind-Type Lockbolt

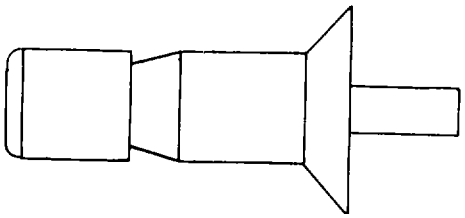

Figure 7-79. Flush-Head Jo-Bolt

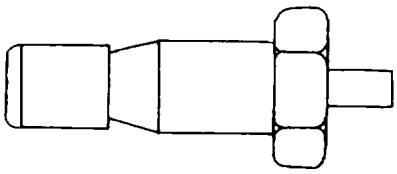

Figure 7-80. Hex Head Jo-Bolt

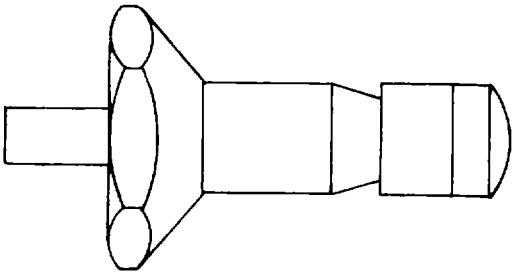

Figure 7-81. Millable Hex Head Jo-Bolt

STYLE	DESCRIPTION	TEMPERATURE LIMITATIONS (°FAHRENHEIT)	NOMINAL DIAMETER	BASIC CODE NUMBER (STANDARD SIZE)		BASIC CODE NUMBER (1/64 OVERSIZE)
FLUSH HEAD	ALLOY STEEL 100 DEGREE FLUSH HEAD	450 MAXIMUM (235 °C)	5/32	NAS1670-08L( )	PLT 110-5 ( )	NAS1750-08L( )
			3/16	NAS1670-3L( )	PLT 110-6 ( )	NAS1750-3L( )
			1/4	NAS1670-4L( )	PLT 110-8 ( )	NAS1750-4L( )
			5/16	NAS1670-5L( )	PLT 110-10-( )	NAS1750-5L( )
			3/8	NAS1670-6L( )		NAS1750-6L( )
	HIGH TEMPERATURE 100 DEGREE FLUSH HEAD	1200 MAXIMUM (650 °C)	5/32	NAS1672-08L( )	PLT 120-5( )	NAS1752-08L( )
			3/16	NAS1672-3L( )	PLT 120-6 ( )	NAS1752-3L( )
			1/4	NAS1672-4L( )	PLT 120-8-( )	NAS1752-4L( )
			5/16	NAS1672-5L( )	PLT 120-10-( )	NAS1752-5L( )
			3/8	NAS1672-6L( )	PLT 120-12 ( )	NAS1752-6L( )
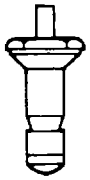 MILLABLE HEAD (FLUSH)	ALUMINUM ALLOY 100 DEGREE MILLABLE HEAD	250 MAXIMUM (120 C)	5/32	NAS1674-08L( )	PLT 130-5-( )	NAS1754-08L( )
			3/16	ST3M687-08L	PLT 130-5-1 5	NAS1754-3L( )
			1/4	NAS1674-3L( )	PLT 130-6-( )	NAS1754-4L( )
				NAS1674-4L( )	PLT 130-8-( )	
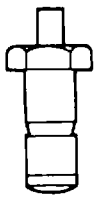 HEX HEAD (PROTRUDING)	ALLOY STEEL HEX HEAD	450 MAXIMUM (235 °C)	5/32	NAS1669-08L( )	PLT 210-5-1( )	NAS1751-08L( )
			3/16	NAS1669-3L( )	PLT 210-6 ( )	NAS1751-3L( )
			1/4	NAS1669-4l( )	PLT 210-8( )	NAS1751-4L( )
			5/16	NAS1669-5L( )	PLT 210-10-( )	NAS1751-5L( )
			3/8	NAS1669-6L( )	PLT 210-12-( )	NAS1751-6L( )
	HIGH TEMPERATURE HEX HEAD	1200 MAXIMUM (650 °C)	5/32	NAS1671-08L( )	PLT 220-5-( )	NAS1753-08L( )
			3/16	NAS1671-3L( )	PLT 220-6-( )	NAS1753-3L( )
			1/4	NAS1671-4L( )	PLT 220-8-( )	NAS1753-4L( )
			5/16	NAS1671-5L( )	PLT 220-10-( )	NAS1753-5L( )
			3/8	NAS1671-6L( )	PLT 220-12-( )	NAS1753-6L( )
	ALUMINUM ALLOY HEX HEAD	250 MAXIMUM (120 °C)	5/32	NAS1673-08L( )	PLT 230-5-( )	NAS1755-08L( )
			3/16	NAS1673-3L( )	PLT 230-6 ( )	NAS1755-3L( )
			1/4	NAS1673-4L( )	PLT 230-8-( )	NAS1755-4L( )

Figure 7-82. Jo-Bolt Basic Part Numbers

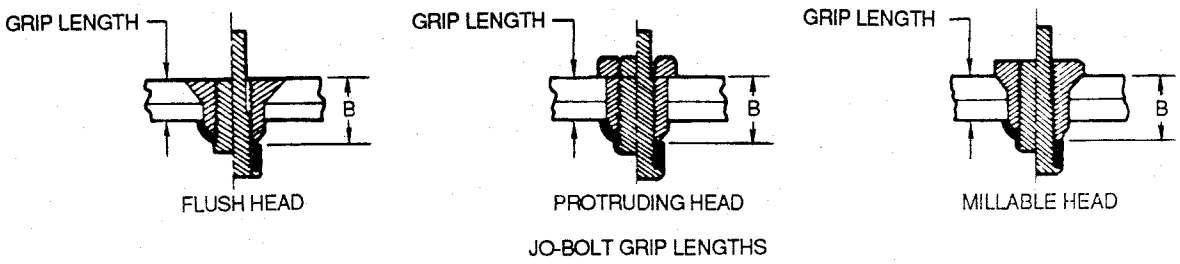

JO-BOLT GRIP LENGTHS

LENGTH DASH NO	GRIP LENGTH RANGE	DIMENSION B NONMILLABLE HEAD JO-BOLTS					DIMENSION B MILLABLE HEAD JO-BOLTS		
		NAS1670 NAS1671 NAS1672 NAS1673 NAS1669			NAS1670 NAS1669 NAS1671 NAS1672		NAS1674 ST3M687		
		5/32	3/16	1/4	5/16	3/8	5/32	3/16	1/4
1	0.031-0.093	0.17							
2	0.094-0.156	0.23	0.23	0.26			0.31	0.31	0.34
3	0.157-0.219	0.29	0.29	0.32	0.34	0.42	0.37	0.37	0.40
4	0.219-0.281	0.36	0.35	0.38	0.41	0.48	0.43	0.43	0.46
5	0.281-0.344	0.42	0.42	0.44	0.47	0.54	0.49	0.50	0.52
6	0.344-0.406	0.48	0.48	0.51	0.53	0.60	0.56	0.56	0.59
7	0.406-0.469	0.54	0.54	0.57	0.59	0.67	0.62	0.62	0.65
8	0.469-0.531	0.61	0.60	0.63	0.66	0.73	0.68	0.68	0.71
9	0.531-0.594	0.67	0.67	0.69	0.72	0.79	0.74	0.75	0.77
10	0.594-0.656	0.73	0.73	0.76	0.78	0.85	0.81	0.81	0.84
11	0.656-0.719	0.79	0.79	0.82	0.84	0.92	0.87	0.87	0.90
12	0.719-0.781	0.86	0.85	0.88	0.91	0.98	0.93	0.93	0.96
13	0.781-0.844	0.92	0.92	0.94	0.97	1.04	0.99	1.00	1.02
14	0.844-0.905	0.98	0.98	1.01	1.03	1.10	1.06	1.06	1.09
15	0.906-0.969	1.04	1.04	1.07	1.09	1.17	1.12	1.12	1.15
16	0.989-1.031	1.11	1.10	1.13	1.16	1.23	1.18	1.18	1.21

Figure 7-83. Jo-Bolt Grip Lengths

with the surrounding surface. Countersinks in material that fall within the limits given in table 7-32 will permit the flush head fasteners to seat flush plus or minus 0.005 inch. The dimensions of flush head, nonmillable Jo-Bolts are approximately the same as the MS 24694 screw, and the same dimpling tools may be used. Dimpled parts that receive flush head Jo-Bolts shall have undersize pilot holes for the dimpling operation. The holes shall be redrilled and reamed to bring them to final size. Extreme care shall be exercised in the preparation of the holes for Jo-Bolts. It is recommended the holes be drilled undersize and then brought up to final size by reaming.

f. Tooling. Special tools are required for the installation of Jo-Bolts. In no case shall power screwdrivers or drill tools used in conjunction with a 1/4 Inch socket and ratchet wrench be used for installing Jo-Bolt fasteners. The hand tool, shown in figure 7-87, consists of a tool body, nose adapter, and wrench adapter. The nose adapter is secured In the tool body and prevents the nut portion of the Jo-Bolt from turning during installation. The wrench adapter rides free inside the nose adapter and gets turning action from the ratchet wrench. There is also a setup for installing Jo-Bolts with pneumatic tools, as shown In figure 7-87. Millable head Jo-Bolts may be shaved flush using standard rivet shaver equipment with a carbide cutter turning at least 10,000 rpm. The diameter of the cutter must be large enough to permit the steel core of the bolt to be at least 3/16 inch from the center of the cutter. A one-inch diameter cutter is required for most fasteners.

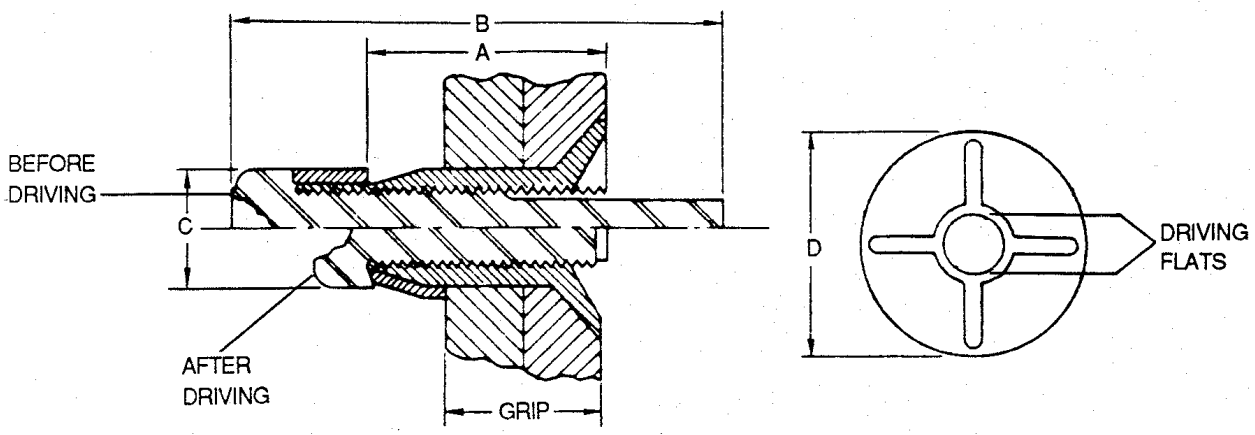

BOLT SIZE			NO. 8 NOMINAL		NO. 10 NOMINAL		1/4 NOMINAL		5/16 NOMINAL		3/8 NOMINAL	
DASH NO.	GRIP RANGE MINIMUM	GRIP RANGE MAXIMUM	A (±0.015)	B (±0.015)	A (±0.015)	B (±0.015)	A (±0.015)	B (±0.015)	A (±0.015)	B (±0.015)	A (±0.015)	B (±0.015)
2	0.094	0.156	0.230	0.733	0.228	0.853	0.256	0.881				
3	0.156	0.219	0.293	0.795	0.291	0.916	0.319	0.944	0.344	1.096	0.417	1.179
4	0.219	0.281	0.355	0.858	0.353	0.978	0.381	1.006	0.406	1.158	0.479	1.242
5	0.281	0.344	0.418	0.920	0.416	1.041	0.444	1.069	0.469	1.221	0.542	1.304
6	0.344	0.406	0.480	0.983	0.478	1.103	0.506	1.131	0.531	1.283	0.604	1.367
7	0.406	0.469	0.543	1.045	0.541	1.166	0.569	1.194	0.594	1.346	0.667	1.429
8	0.469	0.531	0.605	1.108	0.603	1.228	0.631	1.256	0.656	1.408	0.729	1.492
9	0.531	0.594	0.668	1.170	0.666	1.291	0.694	1.319	0.719	1.471	0.792	1.554
10	0.594	0.656	0.730	1.233	0.728	1.353	0.756	1.381	0.781	1.533	0.854	1.617
11	0.656	0.719	0.793	1.295	0.791	1.416	0.819	1.444	0.844	1.596	0.917	1.679
12	0.719	0.781	0.855	1.358	0.853	1.478	0.881	1.506	0.906	1.658	0.979	1.742
13	0.781	0.844	0.918	1.420	0.916	1.541	0.944	1.569	0.969	1.721	1.042	1.804
14	0.844	0.906	0.980	1.483	0.978	1.603	1.006	1.631	1.031	1.783	1.104	1.867
15	0.906	0.969	1.043	1.545	1.041	1.666	1.069	1.694	1.094	1.846	1.167	1.929
16	0.969	1.031	1.105	1.608	1.103	1.728	1.131	1.756	1.156	1.908	1.229	1.992

PART NO.	NOMINAL SIZE	NUT DIAMETER C	HEAD DIAMETER D		PILOT DRILL		FINAL REAM	
		TYPE F, FO, AND 426F	TYPE F AND FO	TYPE 426F	TYPE F AND 426F	TYPE FO	TYPE F AND 426F	TYPE FO
164	NO. 8	0.161 0.156	0.332 0.325	0.290 0.282	NO. 25 (0.150)	NO. 20 (0.161)	0.167 0.164	0.182 0.180
200	NO. 10	0.199 0.195	0.385 0.378	0.357 0.349	NO. 15 (0.180)	NO. 7 (0.201)	0.202 0.199	0.217 0.215
260	1/4	0.260 0.254	0.507 0.499	0.480 0.472	D (0.246)	G (0.261)	0.263 0.260	0.278 0.276
312	5/16	0.312 0.306	0.635 0.626	0.568 0.559	L (0.290)	N (0.302)	0.315 0.312	0.329 0.327
375	3/8	0.375 0.366	0.762 0.752	0.698 0.688	S (0.348)	U (0.368)	0.378 0.374	0.392 0.390

NOTE:
DIMENSIONS SHOWN ARE IN INCHES.

Figure 7-84. Grip Ranges, Sizes, and Diameters of Flush Head Jo-Bolts

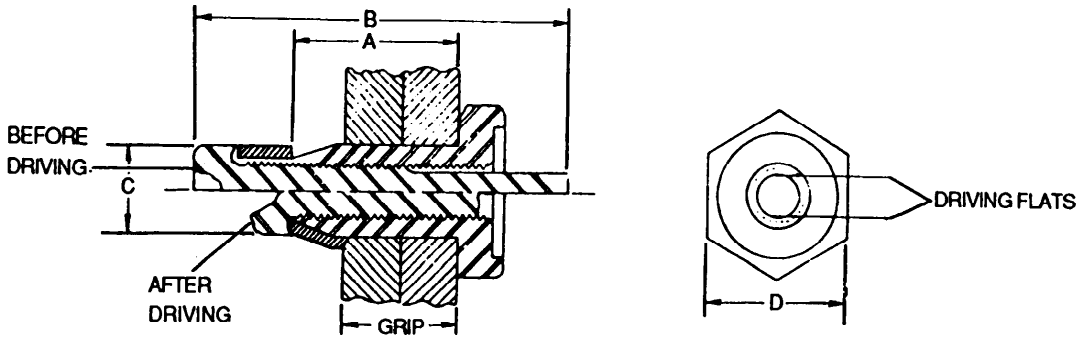

BOLT SIZE			NO. 8 NOMINAL		NO. 10 NOMINAL		1/4 NOMINAL		5/16 NOMINAL		3/8 NOMINAL	
DASH NO.	GRIP RANGE		A	B	A	B	A	B	A	B	A	B
	MINIMUM	MAXIMUM	(±0.015)	(±0.015)	(±0.015)	(±0.015)	(±0.015)	(±0.015)	(±0.015)	(±0.015)	(±0.015)	(±0.015)
1	0.031	0.094	0.168	0.733								
2	0.094	0.156	0.230	0.795	0.228	0.936	0.256	1.006				
3	0.156	0.219	0.293	0.858	0.291	0.999	0.319	1.069	0.344	1.221	0.417	1.304
4	0.219	0.281	0.355	0.920	0.353	1.061	0.381	1.131	0.406	1.283	0.479	1.367
5	0.281	0.344	0.418	0.983	0.416	1.124	0.444	1.194	0.469	1.346	0.542	1.429
6	0.344	0.406	0.480	1.045	0.478	1.186	0.506	1.256	0.531	1.408	0.604	1.492
7	0.406	0.469	0.543	1.108	0.541	1.249	0.569	1.319	0.594	1.471	0.667	1.554
8	0.469	0.531	0.605	1.170	0.603	1.311	0.631	1.381	0.656	1.533	0.729	1.617
9	0.531	0.594	0.668	1.233	0.666	1.374	0.694	1.444	0.719	1.596	0.792	1.679
10	0.594	0.656	0.730	1.295	0.728	1.436	0.756	1.506	0.781	1.658	0.854	1.742
11	0.656	0.719	0.793	1.358	0.791	1.499	0.819	1.569	0.844	1.721	0.917	1.804
12	0.719	0.781	0.855	1.420	0.853	1.561	0.881	1.631	0.906	1.783	0.979	1.867
13	0.781	0.844	0.918	1.483	0.916	1.624	0.944	1.694	0.969	1.846	1.042	1.929
14	0.844	0.906	0.980	1.545	0.978	1.686	1.006	1.756	1.031	1.908	1.104	1.992
15	0.906	0.969	1.043	1.608	1.041	1.749	1.069	1.819	1.094	1.971	1.167	2.054
16	0.969	1.031	1.105	1.670	1.103	1.811	1.131	1.881	1.156	2.033	1.229	2.117

PART NO.	NOMINAL SIZE	NUT DIAMETER C	HEAD DIAMETER D		PILOT DRILL		FINAL REAM	
		TYPE P, PO, AND PA	TYPE P AND PO	TYPE PA	TYPE PO	TYPE P AND PA	TYPE P AND PA	TYPE PO
164	NO. 8	0.161 0.156	0.250 0.244	0.283 0.277	NO. 20 (0.161)	NO. 25 (0.150)	0.167 0.164	0.182 0.180
200	NO. 10	0.199 0.195	0.312 0.305	0.346 0.332	NO. 7 (0.201)	NO. 15 (0.180)	0.202 0.199	0.217 0.215
260	1/4	0.260 0.254	0.375 0.367	0.472 0.458	G (0.261)	D (0.246)	0.263 0.260	0.278 0.276
312	5/16	0.312 0.306	0.437 0.429		N (0.302)	L (0.290)	0.315 0.312	0.329 0.327
375	3/8	0.375 0.366	0.500 0.491		U (0.368)	S (0.348)	0.378 0.374	0.392 0.390

NOTES:

1. PA TYPE NOT AVAILABLE IN THESE SIZES.

2. DIMENSIONS SHOWN ARE IN INCHES.

Figure 7-85. Grip Ranges, Sizes, and Diameters of Hex Head Jo-Bolts.

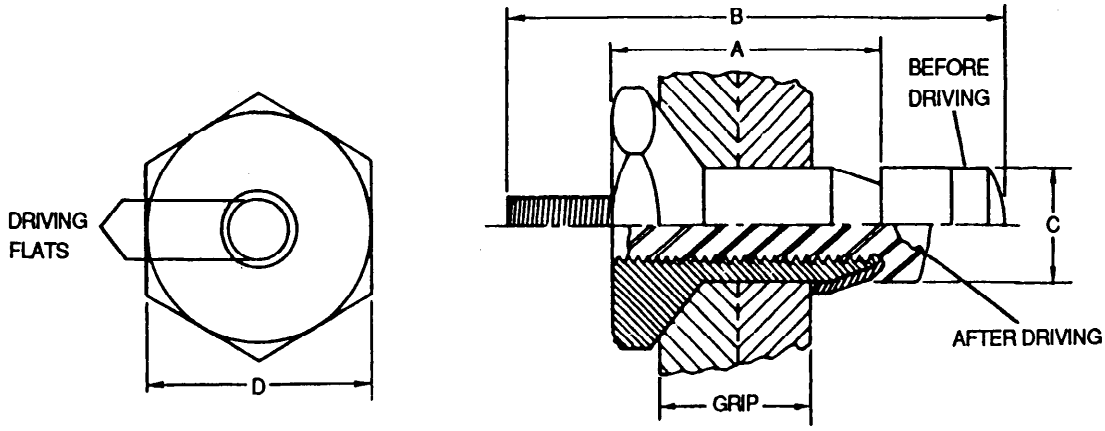

BOLT SIZE			NO. 8 NOMINAL		NO. 10 NOMINAL		1/4 NOMINAL	
DASH NO.	GRIP RANGE MINIMUM	GRIP RANGE MAXIMUM	A (±0.015)	B (±0.015)	A (±0.015)	B (±0.015)	A (±0.015)	B (±0.015)
1								
2	0.094	0.156	0.305	0.795	0.308	0.936	0.366	
3	0.156	0.219	0.368	0.858	0.371	0.999	0.399	
4	0.219	0.281	0.430	0.920	0.433	1.061	0.461	
5	0.281	0.344	0.493	0.983	0.496	1.124	0.524	
6	0.344	0.406	0.555	1.045	0.558	1.186	0.586	
7	0.406	0.469	0.618	1.108	0.621	1.249	0.649	
8	0.469	0.531	0.680	1.170	0.683	1.311	0.711	
9	0.531	0.594	0.743	1.233	0.746	1.374	0.774	
10	0.594	0.656	0.805	1.295	0.808	1.437	0.836	
11	0.656	0.719	0.868	1.358	0.871	1.499	0.899	
12	0.719	0.781	0.930	1.420	0.933	1.561	0.961	
13	0.781	0.844	0.993	1.483	0.996	1.624	1.024	
14	0.844	0.906	1.055	1.545	1.058	1.686	1.086	
15	0.906	0.969	1.118	1.608	1.121	1.749	1.149	
16	0.969	1.031	1.180	1.670	1.183	1.811	1.211	

PART NO.	NOMINAL SIZE	NUT DIAMETER C	HEAD DIAMETER D	PILOT DRILL	FINAL REAM
164	NO. 8	0.161 0.156	0.283 0.277	NO. 25 (0.150)	0.167 0.164
200	NO. 10	0.199 0.195	0.346 0.332	NO. 15 (0.180)	0.202 0.199
260	1/4	0.260 0.254	0.472 0.458	D (0.246)	0.263 0.260

NOTE:
DIMENSIONS SHOWN ARE IN INCHES.

Figure 7-86. Grip Ranges, Sizes, and Diameters of Millable Hex Head Jo-Bolts.

Table 7-32. Jo-Bolt Hole Sizes and Countersink Diameters

Nominal diameter	Standard hole size	1/64 oversize	Countersink diameter nonmlllable head	Countersink diameter millable head
5/32	0.166 +0.003 -0.000	0.180 +0.002 -0.000	0.323 - 0.333	0.270 - 0.280
3/16	0.199 +0.003 -0.000	0.215 +0.002 -0.000	0.376 - 0.386	0.325 - 0.335
1/4	0.260 +0.003 -0.000	0.276 +0.002 -0.000	0.499 - 0.507	0.450 - 0.460
5/16	0.312 +0.003 -0.000	0.327 +0.002 -0.000	0.626 - 0.636	
3/8	0.375 +0.003 -0.000	0.390 +0.002 -0.000	0.752 - 0.762	

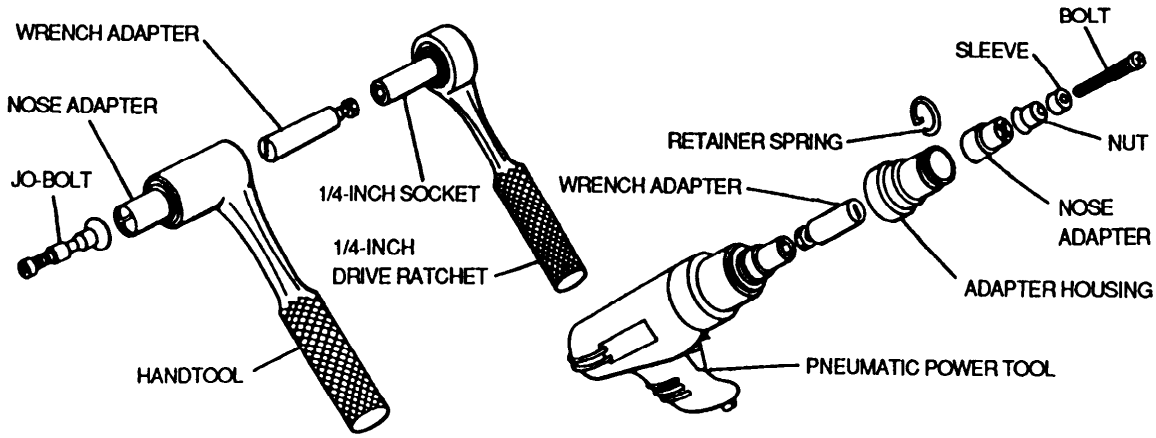

Figure 7-87. Jo-Bolt Tooling

g. Installation. After the holes are correctly sized, use the following procedures to install Jo-Bolts.

(1) Ensure that the material to be joined is secured firmly in position. Cleco fasteners, C-clamps or other means may be used.

(2) Using a hook gauge, measure the thickness of the material and select a Jo-Bolt having the proper grip range.

(3) Insert the Jo-Bolt in the hole. The fastener can be pushed easily into a properly prepared hole, and in no case shall a fastener be forced into the hole. A very light tap fit is acceptable in aluminum alloy parts, but not in steel.

(4) Use hand- or power-gun. In either case, select the correct nose and wrench adapter for the fastener and secure them in the tool body.

NOTE

Power-gun and handgun nose and wrench adapters are not interchangeable.

On flush head Jo-Bolts, the dogs on the nose adapter shall fit into the slots of the fastener heads. On protruding and millable head fasteners, the nose adapter will fit over the fastener head.

(5) Hold the tool firmly against the Jo-Bolt head and perpendicular to the surface of the work. Failure to hold the tool perpendicular may result in stem break off before the Jo-Bolt is tight.

(6) If the hand gun is used, hold the handle of the tool stationary and turn the ratchet handle. As power is applied, the bolt is turned while the nut is held. The sleeve, compressed between the bolt head and tapered end of the nut, is drawn over the end of the nut and is expanded forming the blind head against the inner surface of the part. When the sleeve is drawing up tight, the stabbed portion of the stem is snapped off completing the driving operation.

h. Inspection. Jo-Bolts shall be individually checked for looseness. Using either the driving tools nose adapter turned by the fingers or a torque wrench, apply torque to the fasteners. The Jo-Bolt shall be capable of withstanding the following light torque requirements, and in no case shall the prescribed torque values be exceeded.

NOTE

Apply torque in a counterclockwise direction only. When fasteners are installed with wet sealant, the resistance to rotation values specified must be met whether tested on wet or cured sealant, except that 5/32 inch fasteners are required to withstand only 2 inch pounds maximum torque. If the Jo-Bolt turns when the light torque load is applied, it shall be removed and replaced.

JO-BOLT SERIES	NOMINAL DIAMETER	TORQUE LIMITS (INCH-POUNDS)
164	5/32	4
200	3/16	6
260	1/4	10
312	5/16	20
375	3/8	30

The following paragraphs describe specific inspection criteria for Jo-Bolts.

(1) Collars. In areas where the Jo-Bolt collars can be seen after installation, they shall be visually inspected. Fasteners having split or buckled collars shall be rejected.

(2) Stems. Check the stem break-off with the Jo-Bolt stem break-off gauge shown in figure 7-88. If the stem breaks off outside the limits shown, the fastener either is out of grip range or did not drive properly. If the stem breaks off above the limits shown, the fastener is either too long or too loose. If the stem breaks off lower than the limits shown, the grip is too short. The fastener shall be removed and replaced if it does not meet the limits shown in figure 7-88.

(3) Flush head Jo-Bolts. On flush head Jo-Bolts, the protrusion of the stem shall never exceed 0.010 inch. The maximum that flush heads can fall below flush is 0.066 inch.

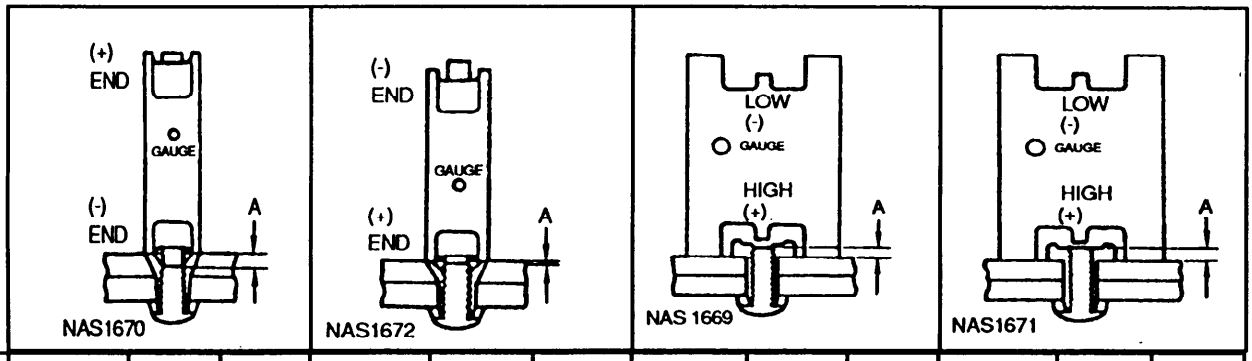

JO BOLT SIZE	JO-BOLT	A	GAUGE NO.	JO-BOLT	A	GAUGE NO.	JO-BOLT	A	GAUGE NO.	JO-BOLT	A	GAUGE NO.
-08 5/32	1670-08L PLT110-5	(+0.020) (-0.068)	4F5	1672-08L PLT120-5	(+0.082) (-0.006)	A4F5LS	1669-08L PLT210-5	(+0.000) (+0.088)	3P5	171-08L PLT220-5	(+0.000) (+0.088)	A3P5
-3 3/16	1670-3L PLT110-6	(+0.015) (-0.073)	4F6	1672-3L PLT120-6	(+0.072) (-0.016)	A4F6LS	1669-3L PLT210-6	(+0.010) (+0.098)	3P6	1671-3L PLT220-6	(+0.015) (+0.103)	A3P6
-4 1/4	1670-4L PLT110-8	(+0.010) (-0.078)	4F8	1672-4L PLT120-8	(+0.072) (-0.026)	A4F8LS	1669-4L PLT210-8	(+0.047) (+0.135)	3P8	1671-4L PLT220-8	(+0.032) (+0.130)	A3P8
-5 5/16	1670-5L PLT110-10	(+0.010) (-0.083)	4F10	1672-5L PLT120-10	(+0.072) (-0.031)	A4F10LS	1669-5L PLT210-10	(+0.043) (+0.146)	3P10	1671-5L PLT220-10	(+0.027) (+0.130)	A3P10
-6 3/8	1670-6L PLT110-12	(+0.010) (-0.093)	4F12	1672-6L PLT120-12	(+0.072) (-0.031)	A4F12LS	1669-6L PLT210-12	(+0.049) (+0.152)		1671-6L PLT220-12	(+0.027) (+0.130)	A3P12

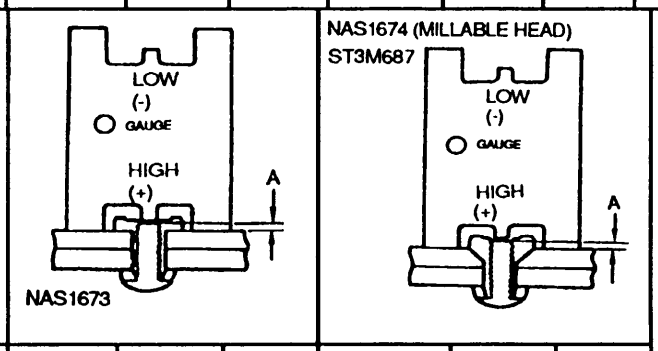

JO-BOLT SIZE	JO-BOLT	A	GAUGE NO.	JO-BOLT	A	GAUGE NO.
-08 5/32	1673-08L PLT230-5	(+0.000) (+0.088)	3P5	ST3M68708 L 1674-08L PLT130-5-1. 5 PLT130-5	(+0.000) (+0.088)	3P5
-3 3/16	1673-3L PLT230-6	(+0.015) (+0.103)	3PA6	1674-3L PLT130-6	(+0.010) (+0.098)	3P6
-4 1/4	1673-4L PLT230-8	(+0.047) (+0.135)	3P8	1674-4L PLT130-8	(+0.010) (+0.098)	3P6
-5 5/16						

Figure 7-88. Jo-Bolt Stem Break-Off Limits

(4) Protruding head Jo-Bolts. Protruding head and flush head fasteners having a gap which permits insertion of a 0.005 inch feeler gauge to the shank under one side of the head shall be rejected. Gaps which permit insertion of a 0.004 inch feeler are acceptable provided that not more than 40 percent of the circumference has the gap.

i. Removal. If it is necessary to remove a Jo-Bolt, a drill with a speed of 500 rpm should be used. The procedure depends on whether the fastener is clamped up tight or is loose.

(1) Tight fastener. If the Jo-Bolt is clamped up tight in the hole, it can be removed by drilling just through the fastener head and then driving out the shank portion with a drift pin, as shown in figure 7-89.

(2) Loose fastener. If the Jo-Bolt is loose in the hole, it must be prevented from turning by using a drill bushing which can engage the head slots, and a handle or other device to hold it. While holding the Jo-Bolt to prevent it from turning, drill the bolt portion of the fastener completely out and remove the bolt head and fastener sleeve (see figure 7-90). After the bolt head and sleeve are removed, pick out the nut portion of the fastener.

7-14 Hi-Lok Fasteners. The Hi-Lok basically is a threaded fastener which combines features of a rivet and bolt. The threaded end of the Hi-Lok pin contains a hexagonal shaped recess. The hex tip of an Allen wrench engages the recess to prevent rotation of the pin while the collar is being installed. The pin is designed in two basic head styles. For shear applications, the pin is made in countersunk style and in a compact protruding head style. For tension applications, the MS24694 countersunk and regular protruding head styles are available. The self-locking, threaded Hi-Lok collar has an internal counterbore at the base to accommodate variations in material thickness. At the opposite end of the collar is a wrenching device which is torqued by the driving tool until it shears off during installation. This shear-off point occurs when a predetermined preload or clamp-up is attained in the fastener during installation.

a. Identification. The basic part number indicates the assembly of the pin and the collar part number, as shown in table 7-33.

b. Selection. There are a number of factors to be considered when selecting a Hi-Lok fastener. They include collar material, grip length, and pin diameter.

(1) Collar material. It is very important that the proper Hi-Lok collar be used with the selected pin head style (shear or tension) to maintain a proper design balance between the pin and the collar. In the part number outlined in paragraph 7-13athe dash number 8 indicates the pin diameter in 1/32-inch increments, or 1/4 inch. Therefore, a collar with a 1/4-inch inside nominal diameter is required, also with a dash number of 8.

(2) Pin grip length. Pin lengths are graduated into 1/16-inch increments. Figure 7-91 shows the grip lengths for protruding and countersunk head Hi-Loks. The material thickness can vary 1/16 inch without changing pin lengths. Adjustment for variations in material thickness in between the 1/16-inch increments is made automatically by the counterbore in the collar, as shown in figure 7-92. A washer may be used under the collar whenever the correct pin length is not available for proper installation. This is to prevent collar splitting whenever the overlength pin shank extends beyond the thickness of the materials being joined.

NOTE

The washer will only be installed under the collar. Do not install more than one washer per fastener and the thickness of the washer must not exceed 0.063 inch. In order to avoid dissimilar metals corrosion, the washer used must be made of a like material as the materials being joined.

(3) Pin diameter. The pin diameter is graduated in 1/32 inch increments. The major diameter of the thread is reduced from the shank diameter to prevent scoring of holes when the pin is installed into an interference fit hole.

c. Hole Preparation. The hole shall be prepared so that the maximum interference fit does not exceed 0.002 inch. This will avoid building up excessive internal stresses in the work adjacent to the hole. As figure 7-93 shows, the Hi-Lok pin has a slight radius under its head to increase fatigue life. After drilling, deburr the edge of the hole to allow the head to seat fully in the hole.

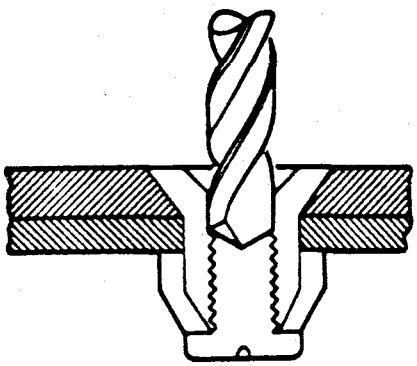

STEP 1. SELECT DRILL IN ACCORDANCE WITH COLUMN A. DRILL TO BELOW HEAD-SHANK JUNCTURE.

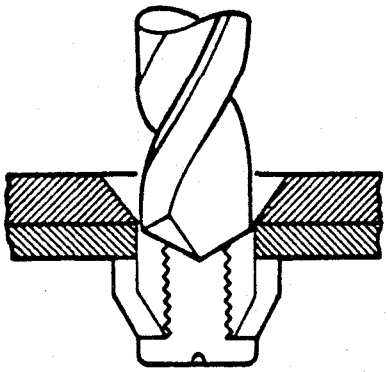

STEP 2. SELECT DRILL IN ACCORDANCE WITH COLUMN B. DRILL TO DEPTH OF PILOT HOLE.

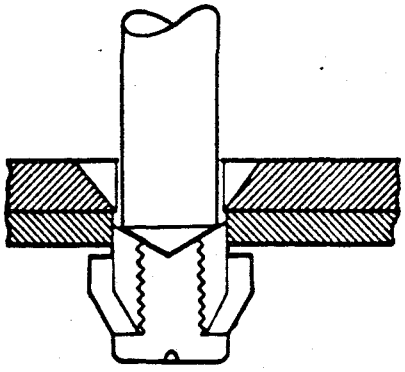

STEP 3. *WITH HAMMER AND NOMINAL* SIZE PUNCH, SEVER HEAD AND DRIVE OUT SHANK AND BLIND HEAD.

JO-BOLT SERIES		A DRILL NO.	A DRILL SIZE	B DRILL NO.	B DRILL SIZE
NAS1670-08L NAS1669-08L NAS1673-08L NAS1674-08L NAS1672-08L NAS1671-08L	PLT 110-5 PLT 210-5 PLT 230-5 PLT 130-5 PLT 120-5 PLT 220-5	40	0.0980	23	0.1540
NAS1670-3L NAS1669-3L NAS1673-3L NAS1674-3L NAS1672-3L NAS1671-3L	PLT 110-6 PLT 210-6 PLT 230-6 PLT 130-6 PLT 120-6 PLT 220-6	30	0.1285	12	0.1890
NAS1670-4L NAS1669-4L NAS1673-4L NAS1674-4L NAS1672-4L NAS1671-4L	PLT 110-8 PLT 210-8 PLT 230-8 PLT 130-8 PLT 120-8 PLT 220-8	21	0.1590	D	0.2460
NAS1670-5L NAS1669-5L NAS1672-5L NAS1671-5L	PLT 110-10 PLT 210-10 PLT 120-10 PLT 220-10	17	0.173	M	0.2950
NAS1670-6L NAS1669-6L NAS1672-6L NAS1671-6L	PLT 110-12 PLT 210-12 PLT 120-12 PLT 220-12	5	0.2055	23/64	0.3594

Figure 7-89. Removal of Tightly installed Jo-Bolt

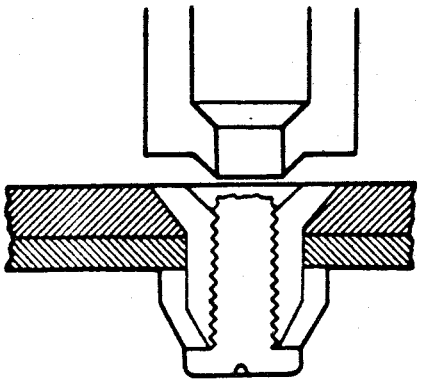

STEP 1. PREVENT NUT FROM TURNING BY ENGAGING DRIVING TOOL NOSE ADAPTER. HOLD NOSE ADAPTER WITH HAND TOOL HANDLE OR VISE-GRIP PLIERS.

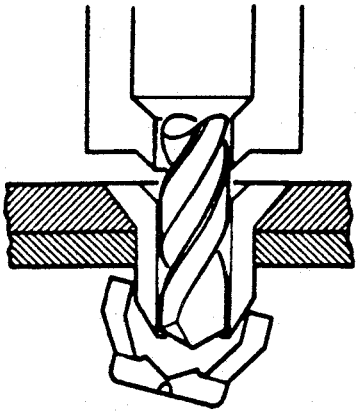

STEP 2. SELECT DRILL IN ACCORDANCE WITH TABLE. DRILL THROUGH SHANK, SEVERING BOLT HEAD.

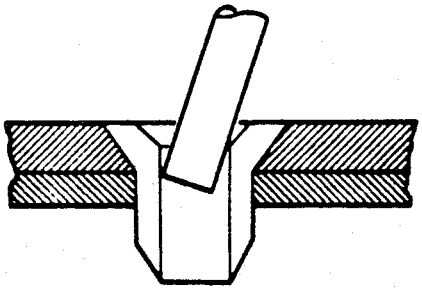

STEP 3. PICK NUT OUT OF HOLE WITH PUNCH.

JO-BOLT SERIES		DRILL NO.	DRILL SIZE
NAS1670-08L	PLT 110-5	40	0.0980
NAS1669-08L	PLT 210-5		
NAS1673-08L	PLT 230-5		
NAS1674-08L	PLT 130-5		
NAS1672-08L	PLT 120-5		
NAS1671-08L	PLT 220-5		
NAS1670-3L	PLT 110-6	30	0.1285
NAS1669-3L	PLT 210-6		
NAS1673-3L	PLT 230-6		
NAS1674-3L	PLT 130-6		
NAS1672-3L	PLT 120-6		
NAS1671-3L	PLT 220-6		
NAS1670-4L	PLT 110-8	21	0.1590
NAS1669-4L	PLT 210-8		
NAS1673-4L	PLT 230-8		
NAS1674-4L	PLT 130-8		
NAS1672-4L	PLT 120-8		
NAS1671-4L	PLT 220-8		
NAS1670-5L	PLT 110-10	17	0.173
NAS1669-5L	PLT 210-10		
NAS1672-5L	PLT 120-10		
NAS1671-5L	PLT 220-10		
NAS1670-6L	PLT 110-12	5	0.2055
NAS1669-6L	PLT 210-12		
NAS1672-6L	PLT 120-12		
NAS1671-6L	PLT 220-12		

Figure 7-90. Removal of Loose Jo-Bolt

Table 7-33. Hi-Lok Numbering System

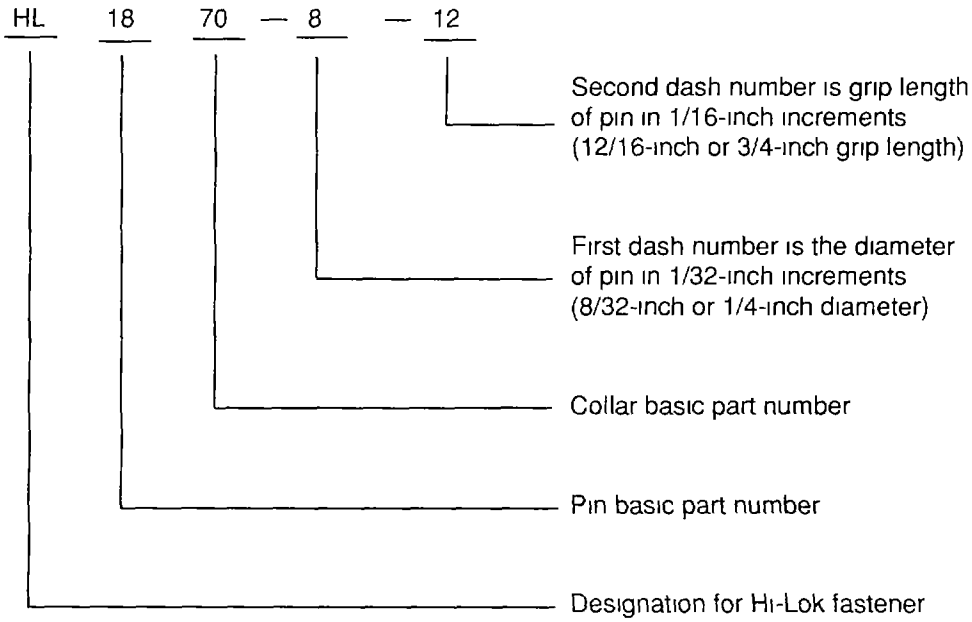

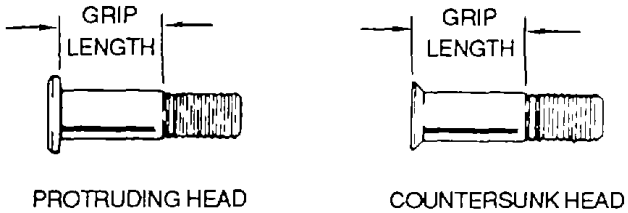

Figure 7-91. Hi-Lok Grip Lengths

d Tooling. The Hi-Lok fastener is installed with hand tools, such as Allen hex wrenches and box-end, open-end, or ratchet-type wrenches.

e installation. Refer to figure 7-94 and the following procedures to install Hi-lok fasteners.

(1) insert the pin into the prepared hole (detail A).

(2) Manually screw the collar onto the pin a minimum of two threads (detail B).

(3) insert tip of Allen hex wrench into hex recess of pin. This prevents rotation of the pin while the collar is being installed (detail C).

(4) While holding the pin with the Allen wrench, screw the collar onto the pin with a box-end, open-end, or ratchet-type wrench until the collar wrenching device has been torqued off (details D and E).

f. Inspection. The Hi-Lok fastener is mainly inspected for pin protrusion following installation. Figure 7-95 shows the protrusion limits.

g Removal. Hi-Lok fasteners are removed with the opposite procedure from installation. The pin is prevented by an Allen wrench from rotating while the collar is unscrewed with wrenches.

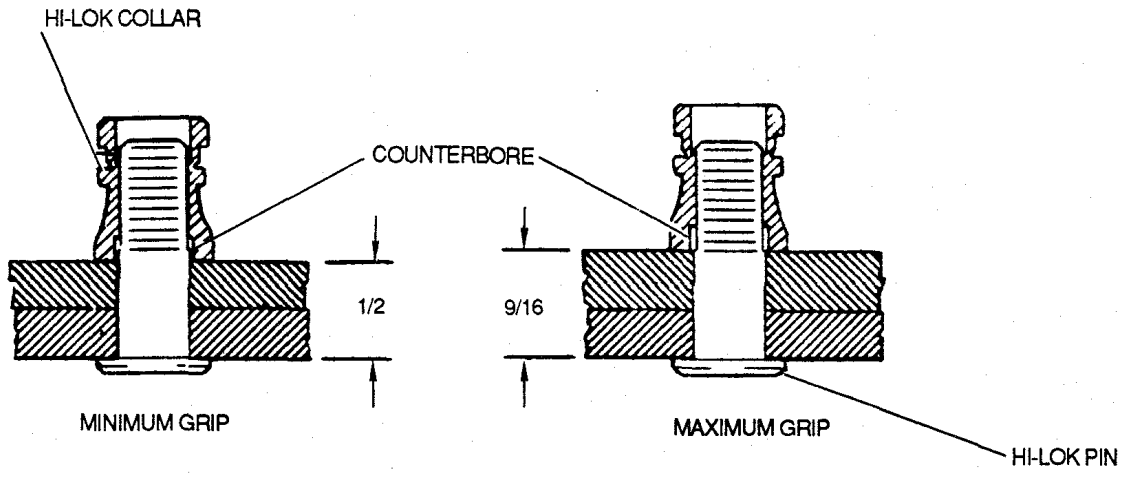

Figure 7-92. Material Thickness Variation

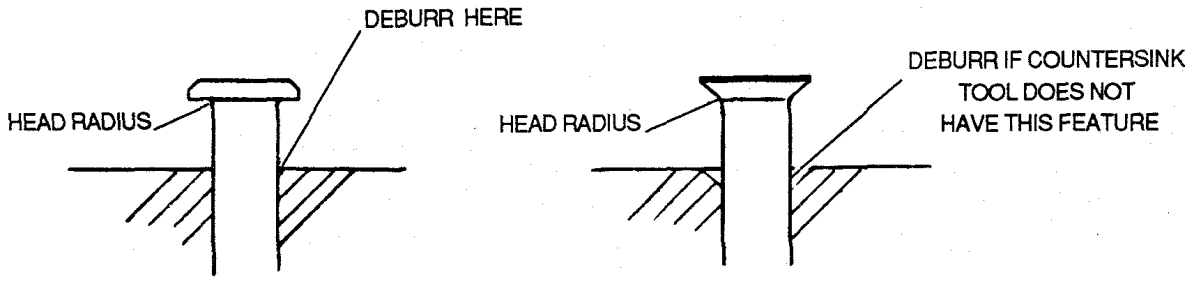

Figure 7-93. Hi-Lok Head Radius

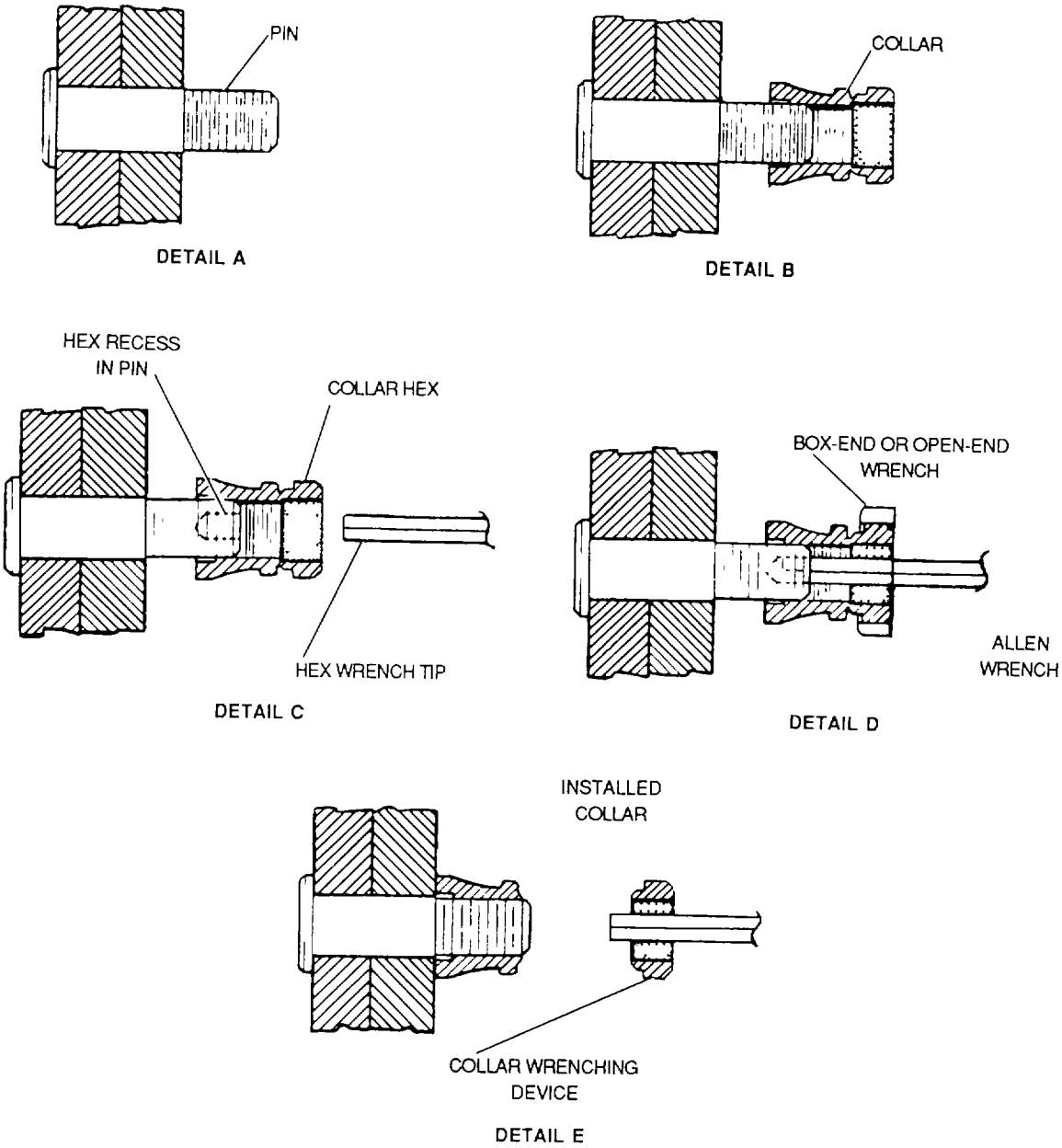

Figure 7-94. Hi-Lok installation

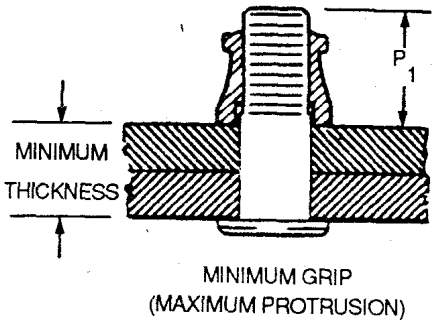

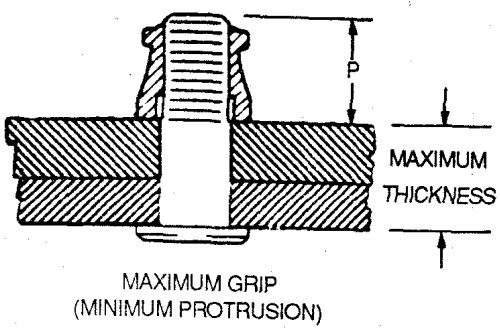

FASTENER		MINIMUM	MAXIMUM
FIRST DASH NUMBER	NOMINAL DIAMETER	PROTRUSION P	PROTRUSION P_1
-5	5/32	0.302	0.384
-6	3/16	0.315	0.397
-8	1/4	0.385	0.467
-10	5/16	0.490	0.572
-12	3/8	0.535	0.617
-14	7/16	0.625	0.707
-16	1/2	0.675	0.757
-18	9/16	0.760	0.832
-20	5/8	0.815	0.887
-24	3/4	1.040	1.112
-28	7/8	1.200	1.275
-32	1	1.380	1.452

Figure 7-95. Hi-Lok Protrusion Limits

7-15. Turn-Lock Fasteners. These fasteners are used to secure cowling, plates, panels, and doors which require quick and frequent removal and replacement. The primary differences between the two types of fasteners are their method of installation and their load-carrying capability. They are not generally designed to carry primary structural loads. These fasteners are easily installed and removed, generally with a quarter turn of the stud. The following precautions should be observed when using these fasteners.

- To prevent fastener damage, use proper tools.
- To prevent damage to structure or fastener components, always use proper grip-length fasteners.
- To prevent damage to structure or fastener components, do not exceed manufacturer's recommended installation torque.
- To prevent damage to structure, do not allow screwdriver or wrench to slip out of driving recess.
- When handling structure with fasteners installed, do not use fasteners as handles.

The two primary types of turn-lock fasteners used on Army aircraft are Dzus fasteners and Camlock fasteners.

a. *Dzus Fasteners*. Dzus fasteners come in two varieties one consisting of a grommet, a spring, and a stud, shown in figure 7-96, and the other consisting of a grommet, a receptacle, and a stud, shown in figure 7-97. The head styles are shown in figure 7-98.

(1) Identification. The following paragraphs describe the part number designations for studs, springs, receptacles, and grommets.

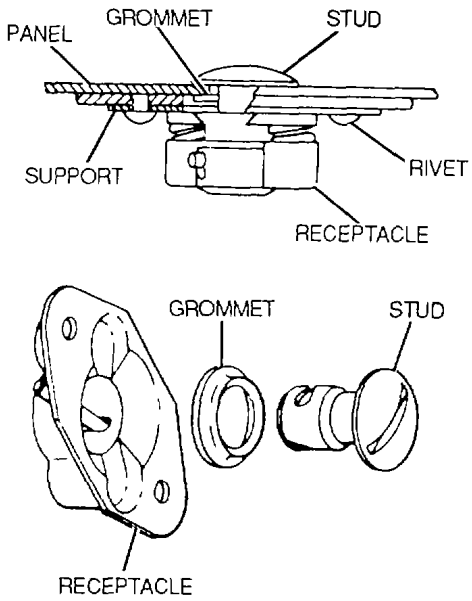

Figure 7-96. Dzus Fastener (Stud, Grommet, and Receptacle)

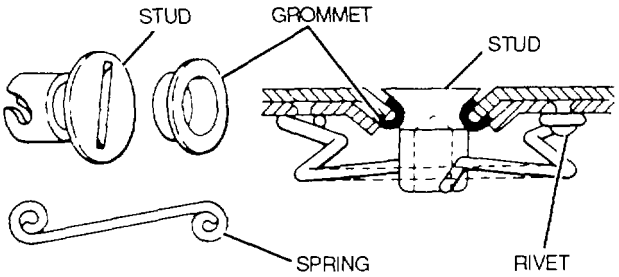

Figure 7-97. Dzus Fastener (Stud, Grommet, and Spring)

(a) Studs (with springs). Studs used with springs are designated with the letters A, F, FA, and HF. The letter A indicates that the head is oval, the letters F and FA that it is flush and the letters HF that it is hexagon The letter J added after these symbols indicates that the stud is undercut, below the head, allowing the stud to remain with the panel when it is removed The letter W indicates that a wing is added to the head, and O indicates that the stud is not undercut, allowing it to be removed The first number after the letters indicates diameter in 1/16-inch, and the second shows length in 1/100-inch

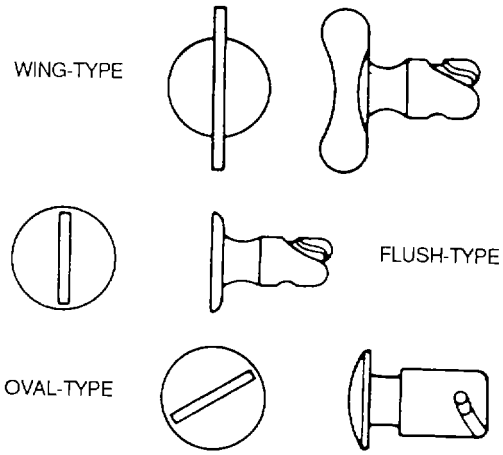

Figure 7-98. Dzus Fastener Head Styles

(b) Studs (with receptacles). Studs used with receptacles are designated by the letters A, AW, and F The letter A indicates that the head is oval, AW shows that it is oval with a wing, and F that it is flush Three sizes of body diameter are available 7/32-inch (size 3 1/2), 5/16-inch (size 5), and 3/8-inch (size 6) These size numbers will be the first number following the letters The letter T and the following number indicate the total thickness of the panel in 1/100 inch

(c) Springs. All standard springs are designated by the letter S The number following this letter indicates the size of the stud with which the spring is used The following dash number indicates the height of the spring For example, a type S3-200 spring is the standard spring for use with a number 3 stud and is 0 200-inch high

(d) Receptacles. Receptacles are available in type R, rigid, and type RF, floating The number following R or RF indicates the body diameter of the applicable stud

(e) Grommets (standard). All standard grommets carry designations similar to springs except that they are prefixed by the letters GA and GF

(f) Grommets (retaining). The stud-retaining grommets are designated as GH The next number indicates the body diameter of the applicable stud

(2) Installation. The following paragraphs describe the installation of the two types of Dzus fasteners.

(a) Fastener with spring. Figure 7-99 shows the special tools used to install Dzus fasteners types A-AJ and F-FA-FJ. Specific installation procedures are as follows:

1 Standard spring installation. Figure 7-100 shows the dimensions required for installing standard springs.

2 Type A-AJ. Installation procedures for type A-AJ Dzus fasteners are shown in figure 7-101.

3 Type F-FA-FJ. Installation of flush Dzus fasteners is outlined in figure 7-102.

4 Wing-types. Installation of wing-type Dzus fasteners is shown in figure 7-103.

5 Secondary procedures. The procedures of staking and checking panel overlap are shown in figure 7-104.

(b) Fastener with receptacle. Figure 7-105 shows the special tools used to install the A-AW-F type Dzus fasteners. Installation of the receptacles is shown in figure 7-106, and installation of the stud and grommet is shown in figure 7-107.

(3) Removal. Removal of Dzus fasteners is as follows:

(a) Centerpunch heads of rivets that secure the spring or receptacle.

(b) Drill through the rivet heads using a drill slightly smaller than the diameter of the rivet shank.

(c) Remove the rivet heads with a hammer and a chisel.

(d) Drive the rivet shanks from the hole with a punch.

(e) Remove the spring or receptacle.

(f) Remove the stud from the grommet by driving it through the grommet with a wooden block or mallet.

(g) Remove the grommet from the hole by cutting it with a chisel or similar tool.

(4) Repair of damaged hole. When the hole is too badly damaged to permit reinstallation of the same size Dzus fastener, repair as follows.

(a) Drill hole in the panel approximately 1/8- inch larger diameter than that required for the fastener.

(b) Fabricate a plate approximately 1 1/2-inches square, made of the same material and thickness as the panel.

(c) Bevel the edges, of the plate and dimple to the dimension equal to the thickness of the plate and the same diameter *as* the hole in the panel.

(d) Place the plate on the panel, line up the holes, drill rivet holes, and rivet the plate to the panel.

(e) In the plate dimple, drill the correct size hole that will accommodate the fastener to be installed.

b. Camlock Fasteners. These fasteners are used to secure aircraft cowlings and fairings. They are made in various styles and designs. Among the most common are the 2600-, 2700-, 40S51-, and 4002-series. The Camlock fastener consists either of three parts- a stud assembly, a grommet with a lockring, and receptacle - or of a stud and receptacle only it is often referred to as the Camlock cowling fastener. Figure 7-108 shows the 4002-series fastener, consisting of a stud, grommet, and receptacle.

(1) Selection. Camlock fasteners are available in different numerical series. Each of them is designed for a specific purpose.

(a) 2600 Series. The 2600 series is used where a flush fit is not required. The stud will withstand tension and shear loads up to 300 pounds.

(b) 2700 Series. The 2700 series is used where a flush fit is required. The stud will withstand tension and shear loads up to 300 pounds.

(c) 28F Series. The 28F series is intended for use where internal clearance conditions are very close. The stud will withstand tension and shear loads up to 300 pounds.

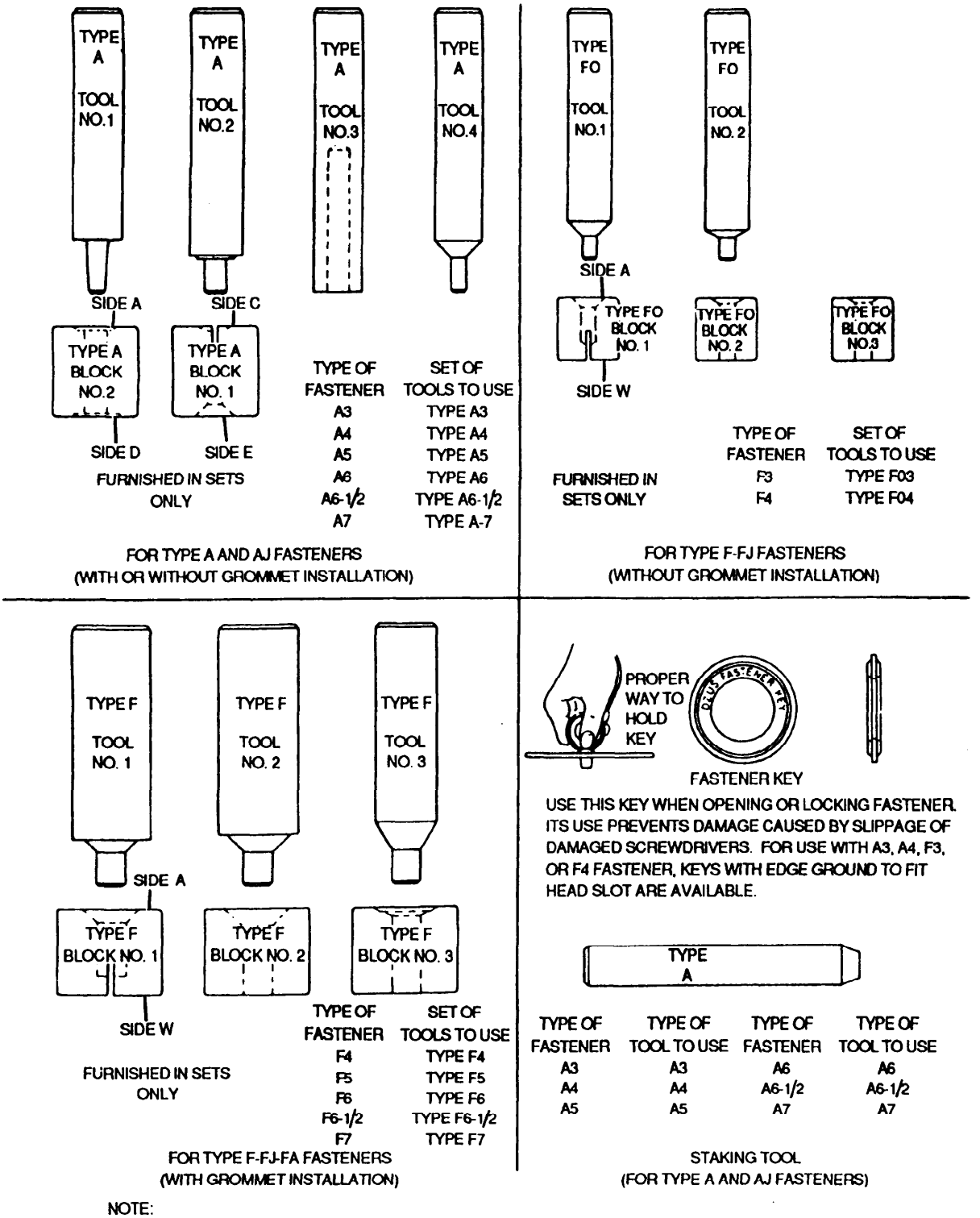

NOTE:
ALL INSTALLATION TOOLS ARE DESIGNED FOR HAND INSTALLATION. STRIKE INSTALLATION TOOLS WITH SOFT-FACED MALLET ONLY.

Figure 7-99. Installation Tools for Type A-AJ and F-FA-FJ Dzus Fasteners

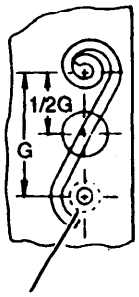

FOR TYPE S3 AND S4 SPRINGS - DRILL NO. 41 (0.096 INCH) HOLE AND COUNTERSINK 3/16 INCH X 110 DEGREES
FOR TYPE S5, S6 AND S7 SPRINGS - DRILL NO. 30 (0.128 INCH) HOLE AND COUNTERSINK 1/4 INCH X 110 DEGREES

Figure 7-100. Standard Spring Installation

(d) 4002 Series. The 4002 series is used where a flush fit is not required and where the potential misalignment between panels may be up to 1/16-inch. The stud can withstand tension and shear loads up to 1,050 pounds.

(2) Replacement. Replace Camlock fasteners or components as described in the following paragraphs.

(a) Replacing cam collar. Replace damaged cam collar as follows:

1 Insert new collar into hole.

2 Place supporting ring on collar from back to support collar and place assembly against a bucking bar, as shown in figure 7-109.

NOTE

In an emergency, use a piece of pipe instead of supporting ring and any block instead of a bucking bar.

3 Peen cam collar skirt with a hammer and a Camlock punch, if available (figure 7-110). When punch is not available, peen with ball peen and soft-face hammers, as shown in figure 7-111.

4 Test collar installation by inserting a screwdriver and attempting to turn (as a screw). Peen collar further if collar turns.

5 Where hole is worn, or exceeds 1/32-inch oversize, cut hole large enough for clearance and secure cam collar repair unit in place with bolts or rivets.

(b) Replacement of damaged grommets. Replace damaged grommets as follows:

1 Where hole is not damaged or oversized, install new grommet in place using Camlock supporting die and punch (if available) and peen grommet in place (figure 7-110). When punch is not available, peen with ball peen and soft face hammers (figure 7-111). A block may be substituted for the Camlock supporting die.

2 Where hole is damaged or more than 1/32 inch oversized, install grommet repair unit.

(c) Replacing stud assembly. Compress spring and stud assembly, using Camlock pliers, and improvised metal strip extractor, or ordinary pliers (figure 7-112), and enter stud through grommet (figure 7-113). Use shortest stud assembly that will lock and unlock without binding.

(WITH GROMMET)

OPERATION 1
DRILL AND INSERT
GROMMET

TYPE		DRILL (INCH)
A3	AJ3	7/32
A4,	AJ4	5/16
A5,	AJ5	3/8
A6,	AJ6	7/16
A6-1/2,	AJ6-1/2	1/2
A7,	AJ7	17/32

OPERATION 2
SET GROMMET

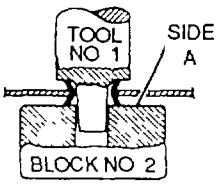

OPERATION 3
INSERT FASTENER

OPERATION 4
CLINCH

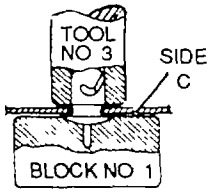

DIMPLING SUPPORT
TYPE A – AJ
(WHEN INSTALLED WITH
GROMMETS)

DRILL AND DIMPLE

TYPE		DRILL (INCH)
A3	AJ3	7/32
A4,	AJ4	1/4
A5,	AJ5	5/16
A6,	AJ6	3/8
A6-1/2,	AJ6-1/2	13/32
A7,	AJ7	7/16

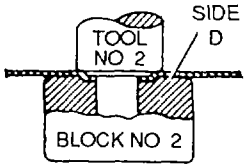

(WITHOUT GROMMET)

OPERATION 1
DRILL AND DIMPLE

TYPE		DRILL (INCH)
A3	AJ3	5/32
A4,	AJ4	13/64
A5,	AJ5	17/64
A6,	AJ6	21/64
A6-1/2,	AJ6-1/2	23/64
A7,	AJ7	3/8

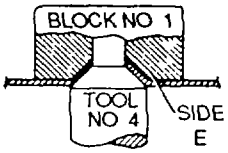

OPERATION 2
INSERT FASTENER

OPERATION 3
CLINCH

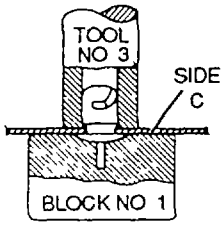

DRILLING SUPPORT
TYPE A — AJ

(WHEN INSTALLED
WITHOUT GROMMETS)

DRILL AND COUNTERSINK

TYPE		DRILL (INCH)
A3	AJ3	7/32
A4,	AJ4	9/32
A5,	AJ5	11/32
A6,	AJ6	13/32
A6-1/2,	AJ6-1/2	7/16
A7,	AJ7	15/32

Figure 7-101. installation of Type A-AJ Dzus Fasteners

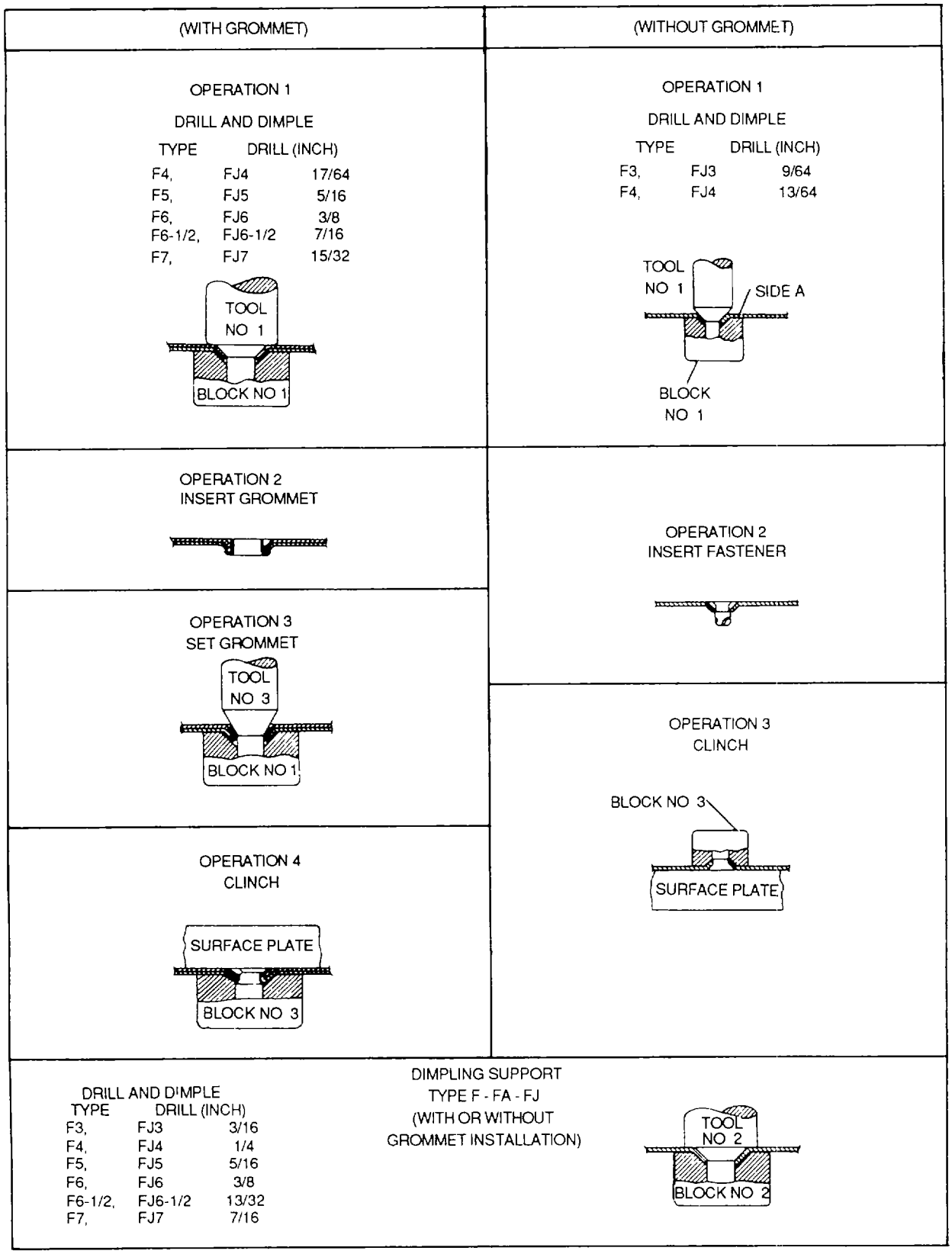

Figure 7-102. Installation of Type F-FA-FJ Dzus Fasteners

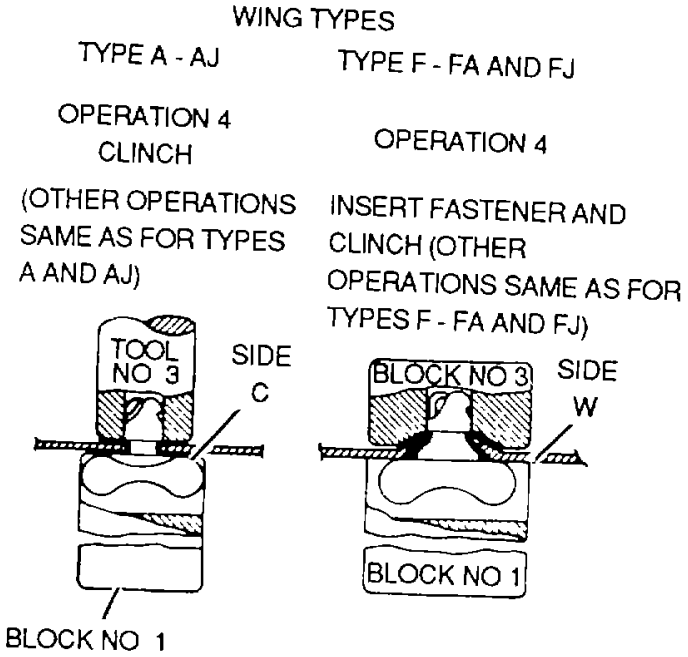

Figure 7-103. Wing-Type Dzus Fastener Installation

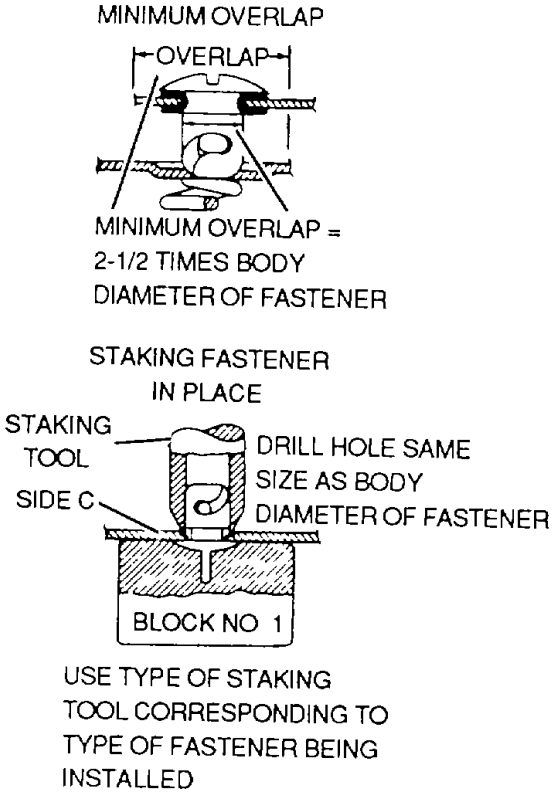

Figure 7-104. Dzus Fastener installation Secondary Procedures

TYPE GH HALF GROMMET INSTALLATION TOOLS

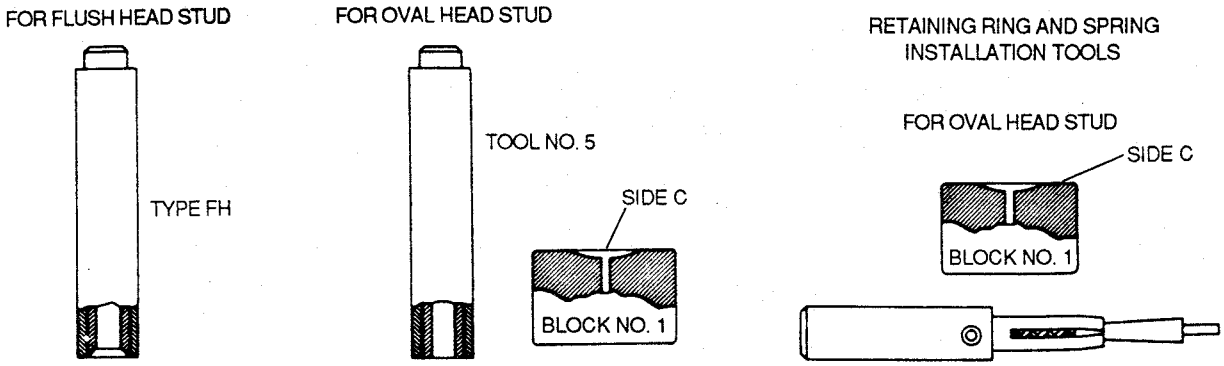

TYPE OF STUD	SET OF TOOLS TO USE
F3-1/2	FH3-1/2
F5	FH5
F6	FH6

TYPE OF STUD	USE TOOL NO. 5 AND BLOCK NO. 1 FOR TYPE
A3-1/2	A3-1/2
A5	A5
A6	A6

TYPE OF STUD	TOOL NO.	USE BLOCK NO. 1 FOR TYPE
A3-1/2	FRST3-1/2	A3-1/2
A5	FRST5	A5
A6	FRST6	A6

NOTE:
ALL INSTALLATION TOOLS ARE DESIGNED FOR HAND INSTALLATION — STRIKE INSTALLATION TOOLS WITH SOFT-FACED MALLET ONLY.

Figure 7-105. Installation Tools for Dzus Fastener (Stud, Grommet, arid Receptacle)

TYPE R, RIGID RECEPTACLE

TYPE OF STUD	A (±0.010) (INCH)	K (±0.005) (INCH)	J (INCH)
A3-1/2 F3-1/2	0.468	0.750	0.096
A5 F5	0.703	1.000	0.128
A6 F6	0.812	1.375	0.128

A DRILL HOLES AND COUNTERSINK RIVET HOLES

NOTE:
SEE CHART FOR HOLE DIAMETERS AND RIVET HOLE SPACING.

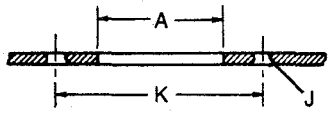

B RIVET RECEPTACLE

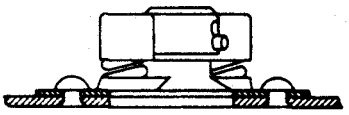

TYPE RF, FLOATING RECEPTACLE

A DRILL HOLES AND COUNTERSINK RIVET HOLES

NOTE:
SEE CHART FOR HOLE DIAMETERS AND RIVET HOLE SPACING.

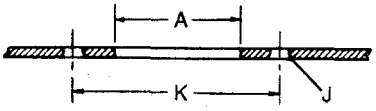

B PLACE SPACERS IN RECEPTACLE HOLES

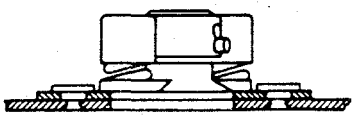

C RIVET RECEPTACLE

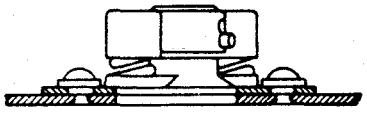

Figure 7-106. Installation of Dzus Fastener Receptacle

FLUSH HEAD INSTALLATION WITH GH HALF GROMMET

A DRILL AND DIMPLE HOLE IN PANEL

TYPE OF STUD	DIAMETER OF HOLE BEFORE DIMPLING (INCH)	B (+0.010) (-0.000) (DIAMETER OF HOLE AFTER DIMPLING) (INCH)	D (+0.010) (-0.000) (INCH)	H (±2) DEGREES
F3-1/2	0.189	0.218	0.406	100 DEGREES
F5	19/64	0.312	0.640	120 DEGREES
F6	23/64	0.375	0.710	120 DEGREES

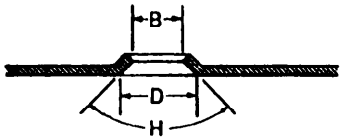

B INSERT STUD AND SLIP GROMMET OVER STUD

C FLATTEN GROMMET

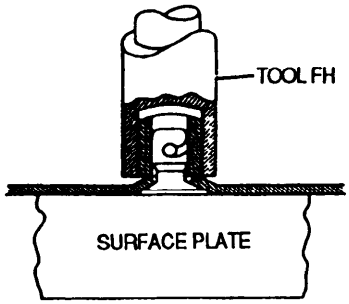

OVAL HEAD INSTALLATION WITH GH HALF GROMMET

A DRILL HOLE IN PANEL

STUD TYPE	HOLE DIAMETER
A3-1/2	7/32 INCH
A5	5/16 INCH
A6	3/8 INCH

B INSERT STUD AND SLIP GROMMET OVER STUD

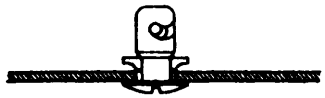

C FLATTEN GROMMET

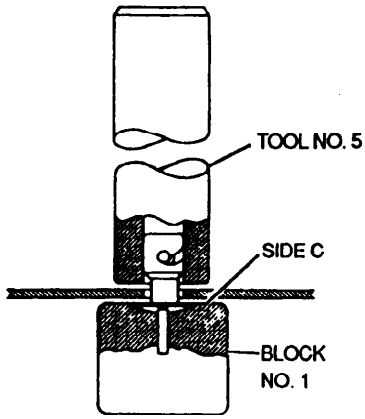

OVAL HEAD INSTALLATION WITH RETAINING RING AND RETAINING SPRING

A DRILL HOLE IN PANEL

STUD TYPE	HOLE DIAMETER
A3-1/2	7/32 INCH
A5	5/16 INCH
A6	3/8 INCH

B SLIP PLUG INTO STUD-PLACE RING OR SPRING OVER PLUG

NOTE:

FOR EASE OF INSTALLATION, ALIGN END OF SPRING OR SPLIT IN RING WITH UNCUT PORTION OF STUD (SEE DOTTED LINE).

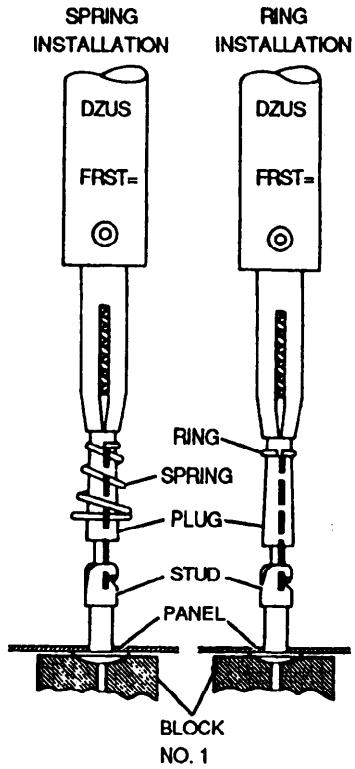

Figure 7-107. Installation of Dzus Fastener Stud and Grommet

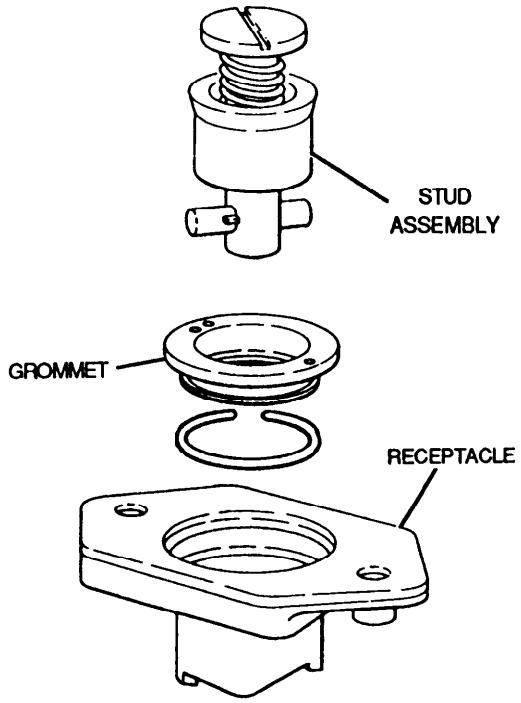

Figure 7-108. Camlock Fastener

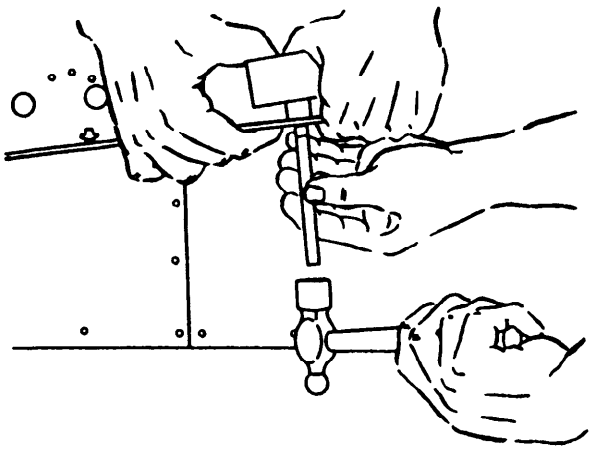

Figure 7-109. Use of Supporting Ring

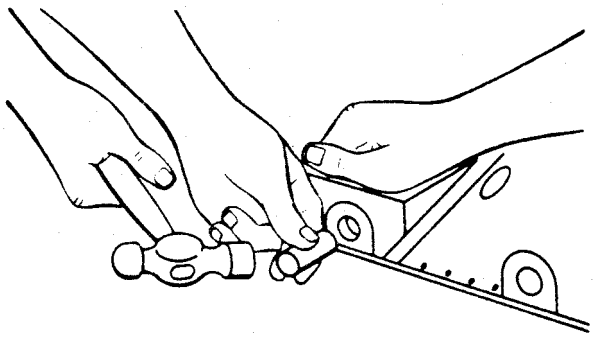

Figure 7-110. Use of Camlock Punch

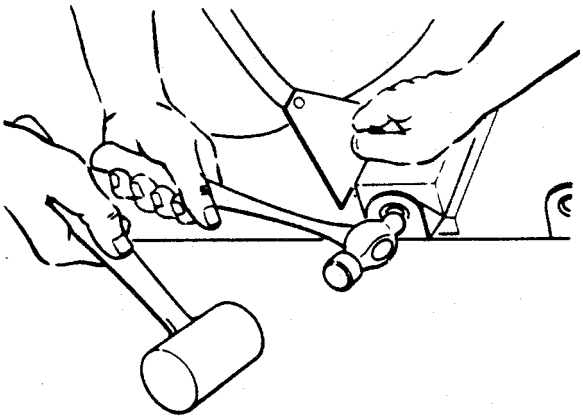

Figure 7-111. Peening with Hammers

c. *Fairing indexing Tools*. When it IS necessary to fabricate a new fairing strip, the holes to be drilled in it may be accurately located by the fairing indexing tool, shown in figure 7-114.

(1) Description. This tool consists of two metal strips about 1 inch wide by 12 inches long, attached at one end by rivets. The bottom strip projects from the upper strip at a slight angle allowing a space into which the fairing may be inserted. The free end of the upper strip has a punch with a driving head built in. The lower strip has a die directly aligned with the punch. The bottom side of the die has a tang which is inserted into the hole.

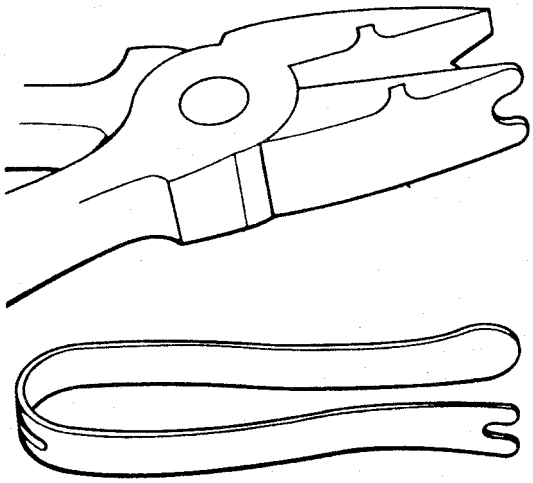

Figure 7-112. Pliers and Strip Extractor.

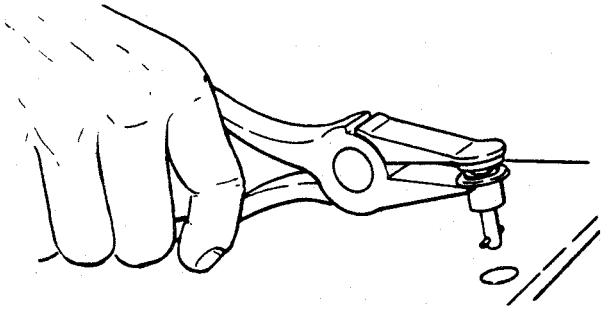

Figure 7-113. Camlock Stud installation.

(2) Use. To locate and mark the hole positions in the new fairing strip, proceed as follows:

(a) Insert the die tang into the hole.

(b) Position the fairing in place and strike the driving head of the punch, thus center punching the hole location.

NOTE
Locate and drill the ends of the fairing first.

(c) Install screws in the end holes already made.

NOTE

With screws inserted through these holes, the remainder of the holes may be located without danger of the fairing strip slipping out of place.

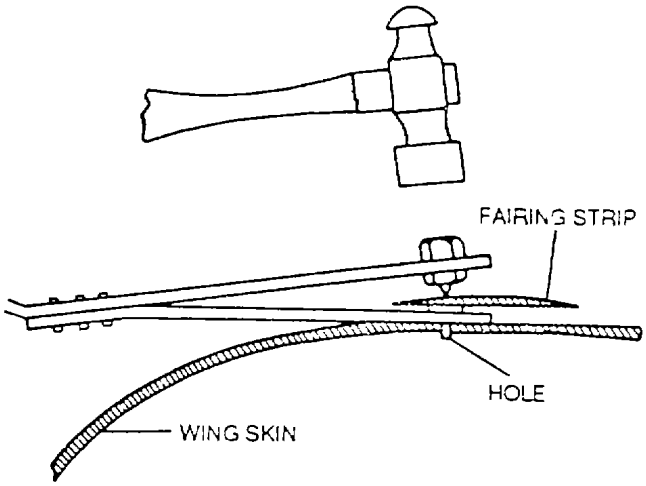

Figure 7-114. Using Fairing indexing Tool

(d) Locate and drill the remainder of the holes.

(3) Care. Ensure that the strips are not bent at any time, because the alignment of the punch and the die may be ruined.

CHAPTER 8
AIRFRAME SHEET METAL REPAIR

8-1. General. The purpose of this chapter is to provide general instructions for typical aircraft structural repairs, the materials required, and the methods to be used. The methods and procedures outlined are presented as general instructions on structural repair for Department of the Army aircraft, and are not directed to specific aircraft. For specific instructions on structural repairs of particular aircraft, refer to the applicable aircraft maintenance manual.

8-2. Basic Principles of Repair. There are three specific qualities of a repair which must be kept in mind during all phases of the repair process, and which apply to virtually all repairs of an aircraft structure. It is critical to maintain the original strength and contour, and to minimize the weight.

a. Maintaining Original Strength. The following paragraphs contain the rules to be observed in order to maintain the original strength.

(1) Patch design. Ensure that the cross-sectional area of a splice or patch is at least equal to or 1/4 greater than that of the damaged part. Avoid abrupt changes in cross-sectional area to eliminate dangerous stress concentration by tapering splices and making small skin patches round or elliptical-shaped instead of rectangular.

(2) Stresses on repaired member. If the member is subjected to compression or bending loads, the patch should be placed on the outside of the member to obtain a higher resistance to such loads. If the patch cannot be placed there, material one gauge thicker than the original shall be used for the repair.

(3) Buckling. Replace or reinforce with a member of equal strength any member that has buckled. A buckled part of the structure shall not be depended upon to carry its load again, no matter how well the part may be strengthened.

(4) Replacement material. The material used in all replacements or reinforcements must be similar to that used in the original structure. If an alloy weaker than the original must be substituted for it, a heavier thickness must be used to give equivalent cross-sectional strength. A material that is stronger, but thinner, must not be substituted for the original because one material can have greater tensile but less compressive strength than another, or vice versa. Also, the buckling and torsional strength of many sheet metal and tubular parts depends primarily on the thickness of the material rather than its allowable compressive and shear strengths.

(5) Forming. Care must be taken when forming. Heat-treated and cold-0worked aluminum alloys will stand very little bending without cracking. On the other hand, soft alloys are easily formed, but they are not strong enough for primary structure. Strong alloys can be formed in their annealed condition, and heat-treated before assembling to develop their strength.

(6) Riveting. Rivet selection can be determined by the size and type of rivets used by the manufacturer in the row of rivets immediately adjacent to the damaged area.

(7) Excessive strength. Extensive repairs which are made too strong can be as undesirable as repairs weaker than the original structure. All aircraft structure must flex slightly to withstand the violent and excessive forces imposed during takeoff, flight, and landing. If a repaired area is too strong, excessive flexing will occur only at the edge of the completed repair, causing acceleration of metal fatigue.

b. Maintaining Original Contour. All repairs must be formed to fit the original contour perfectly. A smooth contour is essential when making patches on the smooth external skin of an aircraft.

c. Minimizing Weight. The weight of all repairs will be kept to a minimum. Patches should be small as possible and no more rivets should be used than necessary. In many cases, repairs disturb the original balance of the structure. Adding excessive weight may make the aircraft so unbalanced that the trim and balance tabs will require readjustment. In an area such as the spinner of a propeller, a repair will require application of balancing patches so that a perfect balance of the propeller assembly can be maintained.

8-3. Structural Inspection. Whether specific damage is suspected or not, an aircraft structure must occasionally be inspected for structural integrity. The following paragraphs provide general guidelines for this inspection.

a. Corrosion. When inspecting the structure of an aircraft, it is very important to watch for evidence of corrosion on the inside. This is most likely to occur in pockets and corners where moisture and salt spray may accumulate; therefore, drain holes must always be kept clean.

b. Surface Indications. While an injury to the skin covering caused by impact with an object is plainly evident, a defect such as distortion or failure of the substructure may not be apparent until some evidence develops on the surface, such as canted, buckled or wrinkled covering, and loose rivets or working rivets. A working rivet is one which has movement under structural stress, but has not loosened to the extent that movement can be observed. This situation can sometimes be noted by a dark, greasy residue or deterioration of paint and primers around rivet heads. External indications of internal injury must be watched for and correctly interpreted when found. When found, an investigation of the substructure in the vicinity should be made and corrective action taken.

c. Skin Wrinkles. Warped wings are usually indicated by the presence of parallel wrinkles running diagonally across the wings and extending over a major area. This condition may develop from unusually violent maneuvers, extremely rough air, or extra hard landings, and while there may be no actual rupture of any part of the structure, it may be distorted and weakened. Similar failures may also occur in fuselages.

d. Skin Cracks. Small cracks in the skin covering may be caused by vibration, and they are frequently found leading away from rivets.

e. Protective Coatings, Aluminum alloy surfaces having chipped protective coating, scratches, or worn spots which expose the surface of the metal should be recoated at once, as corrosion may develop rapidly. The same principle is applied to Alclad surfaces. Scratches which penetrate the pure aluminum surface layer will permit corrosion to take place in the alloy beneath.

f. Non-Destructive Inspection. A simple visual inspection cannot accurately determine whether or not suspected cracks in major structural members actually exist, nor the full extent of the visible cracks. Therefore, the various methods and procedures for this form of inspection are found in TM 1-1500-204-23-7 and TM 55-1500-335-23.

8-4. Damage Inspection. When investigating damage to an aircraft, it is necessary to make an extensive inspection of the structure. When any component or group of components has been damaged, it is essential that both the damaged members and the attaching structure be investigated, since the damaging force may have been transmitted over a large area, sometimes quite remote from the point of original damage. Wrinkled skin, elongated or damaged bolt or rivet holes, or distortion of members will usually appear in the immediate area of such damage, and any one of these conditions will call for a close inspection of the adjacent area. Check all skin dents and wrinkles for any cracks or abrasions. Nondestructive inspection in accordance with TM 55-1500-335-23 and TM 1-1500-204-23-7 will be used as required when inspecting damage. When investigating damage, proceed as follows:

a. Remove all dirt, grease, and paint from the damaged and surrounding areas so that the exact condition of each rivet, bolt, and weld may be determined.

b. Inspect skin for wrinkles throughout a large area.

c. Check the operation of all movable parts in the area.

d. Determine whether the best procedure would be to repair the damaged area or to remove and replace parts.

8-5. Damage Classification. After the extent of damage is determined, it should be classified under one of the following categories: negligible damage, damage repairable by patching, damage repairable by insertion, or damage that requires replacement of parts. In many cases, the availability or lack of repair materials and time are the most important factors in determining whether a part should be repaired or replaced. Following are general descriptions of these types of damage.

a. Negligible Damage. Negligible damage is that which does not affect the structural integrity of the member involved or that can be corrected by a simple procedure without placing flight restrictions on the aircraft. This class of damage includes small dents, scratches, cracks, or holes that can be repaired by smoothing, sanding, stop-drilling, hammering out, or other means of repair that do not require the use of additional materials.

b. Damage Repairable by Patching. This type of damage is any damage exceeding the limits of negligible damage, which is usually stated as 25 percent or less of the total panel section. Repair is accomplished by bridging the damaged area with a splice material. The splice or patch material used in riveted or bolted repairs is normally of the same type as the original material, only one gauge heavier. In a patch repair, filler plates of the same gauge and type of material as the damaged component can be used for bearing surfaces or to restore the damaged part to its original contour.

c. Damage Repairable by Insertion. This damage can be repaired by cutting away the damaged section, replacing the removed portion with an identical section of the damaged component, and securing the insertion with splices at each end.

d. Damage Requiring Replacement of Parts. This damage involves one or more of the following conditions:

- A complex part has been severly damaged.
- The surrounding structure of a part or its inaccessibilty makes repair impractical.
- It is economically feasible to replace the damaged part, i.e. local manufacture.
- Forged or cast fittings are damaged beyond the limits of negligible damage.

8-6. General Repair Practices. These paragraphs discuss the various general guidelines used in most standard repair procedures.

a. Structural Support During Repair. During repair, the aircraft must be adequately supported to prevent further distortion or damage. It is also important that the structure adjacent to the repair is supported when it is subject to static loads. The aircraft structure can be supported adequately by the landing gear or by jacks where the work involves a repair such as removing the control surfaces, wing panels, or stabilizers. Cradles must be prepared to hold these components while they are removed from the aircraft. When the work involves extensive repair of the fuselage, landing gear, or wing center section, the hoisting provisions may be constructed to distribute the loads while repairs are being accomplished. Figure 8-1 shows a typical aircraft jig. Always check the applicable aircraft maintenance manual for specific support requirements.

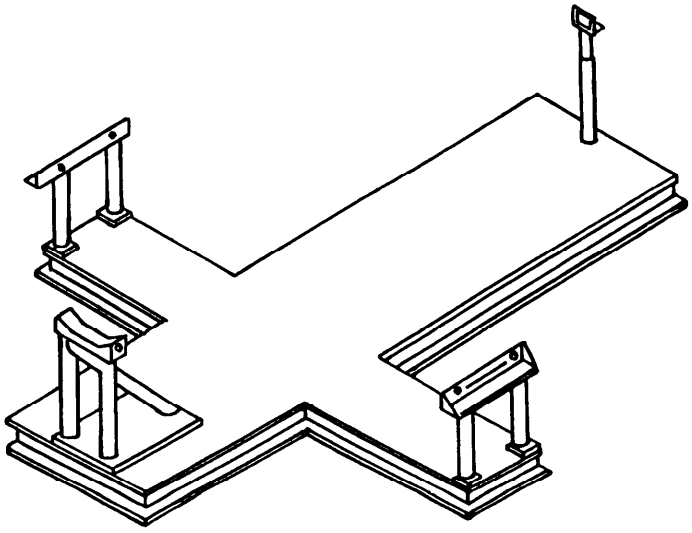

Figure 8-1. Aircraft Mating Jig

b. Damage Evaluation. Before starting any repair, the extent of damage must be fully evaluated to determine if repair is authorized or even practical. This evaluation should identify the original material used and the type of repair required.

c. Damage Removal. To prepare a damaged area for repair, proceed as follows:

(1) Remove all distorted skin and structure in damaged area.

(2) Remove damaged material in such a manner that the edges of the completed repair will match existing structure and aircraft lines.

(3) Round all square corners.

(4) Smooth out any abrasions and/or dents.

(5) Remove and incorporate into the new repair any previous repairs joining the area of the new repair.

d. Repair Material Selection. The repair material must duplicate the strength of the original structure. If an alloy weaker than the original material has to be used, a heavier guage must be used to give equivalent cross-sectional strength. A lighter guage material should not be used even when using a stronger alloy.

e. Repair Parts Layout. All new sections fabricated for repairing or replacing damaged parts in a given aircraft should be carefully laid out to the dimensions listed in the applicable aircraft manual before fitting the parts into the structure.

f. Rivet Selection. Normally, the rivet size and material should be the same as the original rivets in the part being repaired. If a rivet hole has been enlarged or deformed, the next larger size rivet must be used after reworking the hole. When this is done, the proper edge distance for the larger rivet must be maintained. Where access to the inside of the structure is impossible and blind rivets must be used in making the repair, always consult the applicable aircraft maintenance manual for the recommended type, size, spacing, and number of rivets needed to replace either the original installed rivets or those that are required for the type of repair being performed.

g. Rivet Spacing and Edge Distance. The rivet pattern for a repair must conform to instructions in the applicable aircraft manual. The existing rivet pattern is used whenever possible.

h. Corrosion Treatment. Prior to assembly of repair or replacement parts, make certain that all existing corrosion has been removed in the area and that the parts are properly insulated one from the other. Proceed as follows:

(1) Where corrosion exists, remove the corrosive products and finishes.

(2) Where magnesium alloys are involved, apply a minimum of two coats of epoxy primer (MIL-P-23377) on each faying surface. In addition, insert tape, pressure sensitive adhesive (for dissimilar metals) (MIL-T-23142) between faying surface. The tapemust extend beyond the edge of faying surfaces at least 1/4 inch. Where the use of tape is impractical, assemble parts wet with epoxy primerand provide an adequate primerfillet at joint boundaries.

(3) Where steel alloys are involved, apply two coats of epoxy primer (MIL-P-23377) to each surface.

(4) Apply an additional coat of epoxy primer (MIL-P-23377) on the exterior edges of faying surfaces where magnesium and steel alloy parts are assembled.

(5) Install all rivets, bolts, nuts and washers wet with epoxy primer (MIL-P-23377).

(6) Apply an additional coat of epoxy primer (MIL-P-23377) to the heads of aluminum alloy rivets driven through corrosion-resistant steel.

i. Riveting. When riveting all parts together in the final steps of repair, proper shop head height and neatness of the repair must be ensured. Refer to Chapter 7 for specific riveting procedures.

j. Tolerance. Unless otherwise stated by the applicable aircraft manual or engineering specifications, all measurements and repairs should be made with a tolerance of plus or minus 1/64 inch.

k. Chem-Milled Skin Repair. A chem-milled structural member varies in thickness from end to end or side to side. Therefore, repair requires a procedure slightly different from standard procedures. The repair material must be as thick as the thickest part of the them-milled structure. The repair material is applied to the thickest part of the damaged member, using normal riveting procedures. Shimming is used to fill the gap between the repair material and the thin part of the member. The shim material is secured with rivets that pass through, the damaged part, the shim material

and the repair material Figure 8-2 shows atypical chem-milled skin repair

8-7. Stressed Skin Repair. Stressed skin carries a large portion of the load imposed upon an aircraft structure. Various specific skin areas are classified as highly critical, semi-critical, or non-critical. To determine specific repair requirements for these areas, refer to the applicable aircraft maintenance manual. This paragraph, however, describes general procedures for the repair of stressed skin.

a. Patches. Skin patches may be classified as two types the lap or scab patch, and the flush patch.

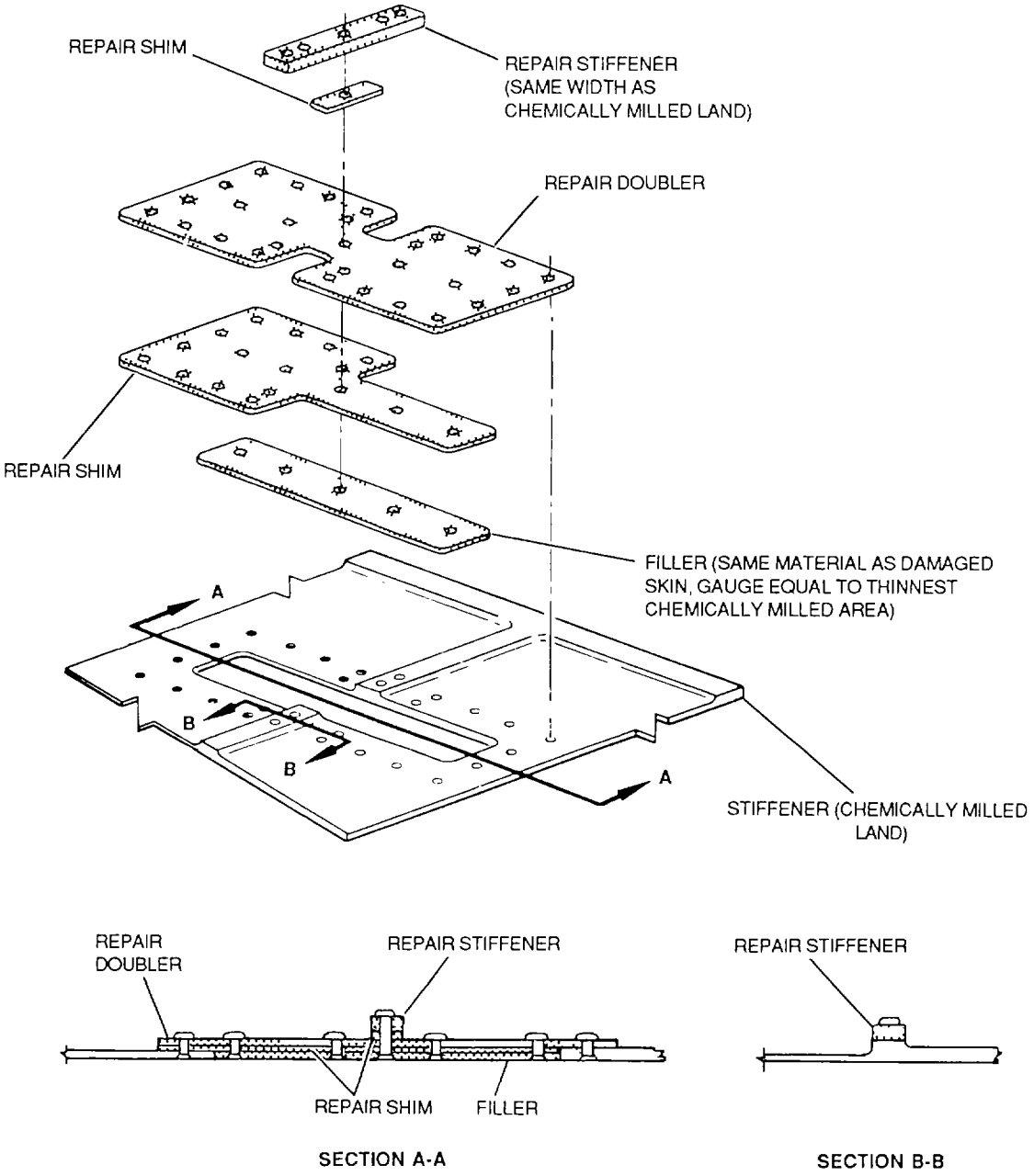

Figure 8-2. Chem-Milled Skin Repair

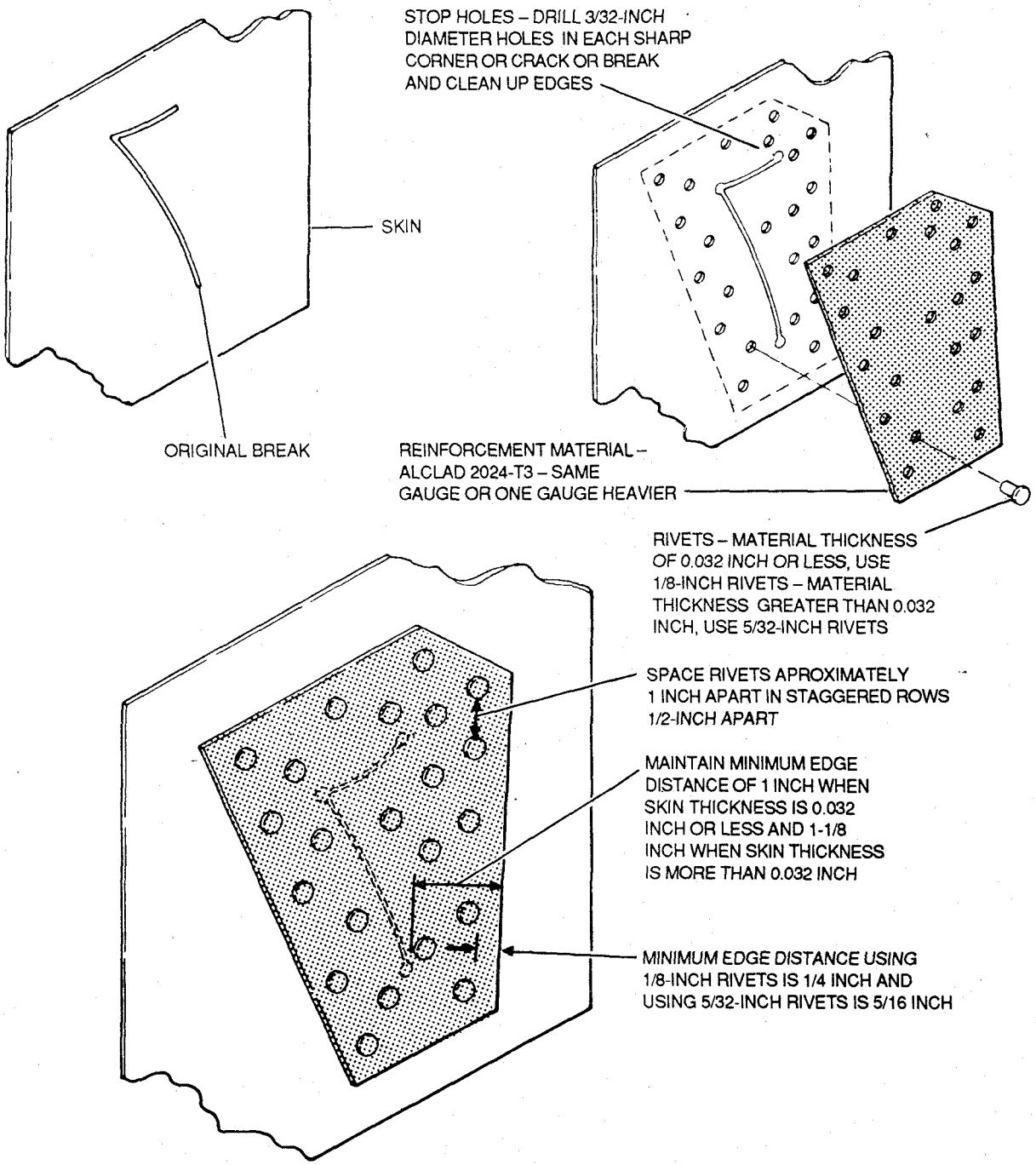

Figure 8-3. Lap or Scab Patch (Crack)

(1) Lap or scab patch. This type of patch is an external patch where the edges of the patch and the skin overlap each other. The overlapping portion of the patch is riveted to the skin. Lap patches may be used in most areas where aerodynamic smoothness is not important. Figure 8-3 shows a typical patch for a crack, and figure 8-4 shows a typical patch for a hole.

(2) Flush patch. *A flush patch is a filler patch that is* flush to the skin when applied it is supported by and riveted to a reinforcement plate which is, in turn, riveted to the inside of the skin. Figure 8-5 shows a typical flush patch repair.

b. Open and Closed Skin Area Repair. The factors that determine the methods to be used in skin repair are accessibility to the damaged area and the instructions found in the aircraft maintenance manual. The skin on most areas of an aircraft is inaccessible for making the repair from the inside. This skin is known as closed skin. Skin that is accessible from both sides is called open skin. Usually, repairs to open skin can be made in the conventional manner using standard rivets, but in repairing closed skin, some type of special fastener must be used. The exact type to be used will depend on the type of repair being made and the recommendations of the aircraft manufacturer.

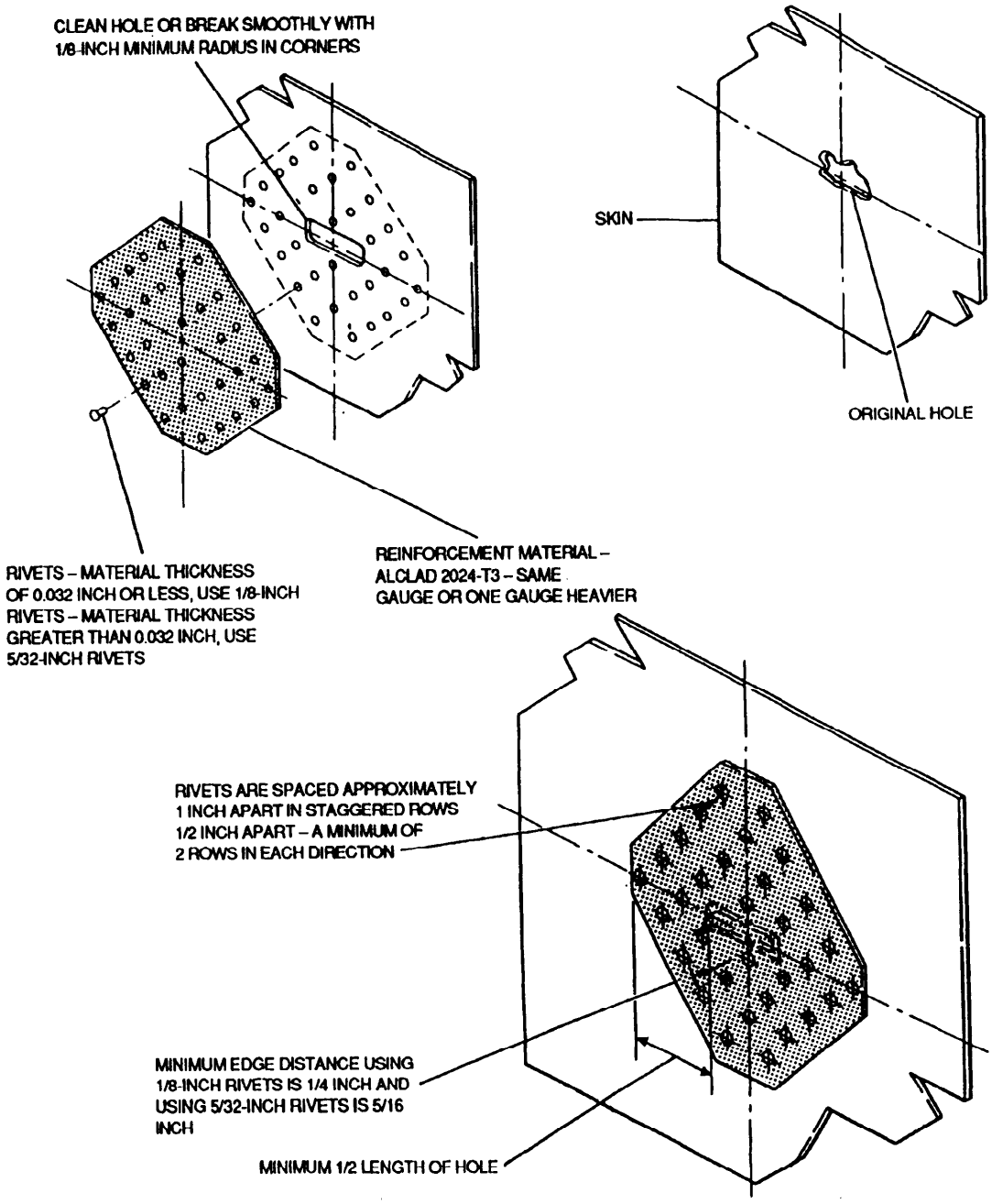

Figure 8-4. Lap or Scab Patch (Hole)

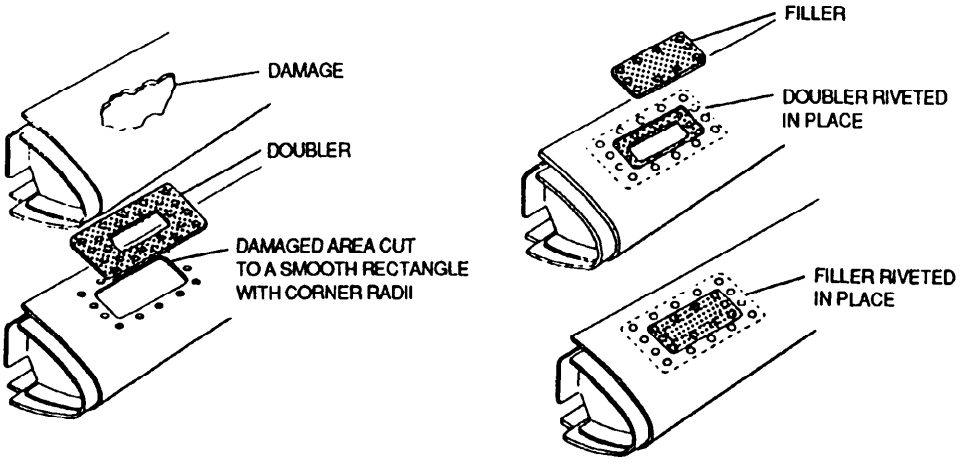

Figure 8-5. Flush Patch

c. Patching Procedures. The following paragraphs provide general procedures for installing lap and flush-type patches.

(1) Lap-type patches. When repairing cracks or small holes with a lap or scab patch, the damage must be cleaned and smoothed. In repairing cracks, a small hole must be drilled in each end and sharp bend of the crack before applying the patch. These holes relieve the stress at these points and prevent the crack from spreading. The patch must be large enough to install the required number of rivets. It may be cut circular, square, or rectangular. If it is cut square or rectangular, the corners will be rounded to a radius no smaller than 1/4 inch. The edges must be chamfered to an angle of 45 degrees for 1/2 the thickness of the material, and bent down 5 degrees over the edge distance to seal the edges. This reduces the chance that the repair will be affected by the airflow over it. These dimensions are shown in figure 8-6.

(2) Flush patches. Figure 8-7 shows a typical flush patch repair. The doubler is inserted through the opening and rotated until it slides in place under the skin. The filler must be of the same gauge and material as the original skin. The doubler should be of material one gauge heavier than the skin.

d. Flush Access Door. Installing a flush access door sometimes makes it easier to repair the internal structure and damage to the skin in certain areas, if it is permitted by the applicable aircraft maintenance manual. This installation consists of a doubler and a stressed cover plate. A single row of nut plates is riveted to the doubler, and the doubler is riveted to the skin with two staggered rows of rivets. This installation is shown in figure 8-8. The cover plate is then attached to the doubler with machine screws.

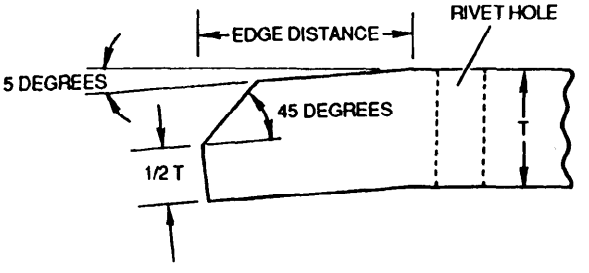

Figure 8-6. Lap Patch Edge Preparation

8-8. Skin Replacement and Repair. This paragraph discusses the replacement procedures and repair methods for aircraft skin.

a. Skin Replacement. Damage to metal aircraft skin that exceeds repairable limits requires replacement of the entire panel. A panel must also be replaced when there are too many previous repairs in a given section or area. The following paragraphs outline skin replacement.

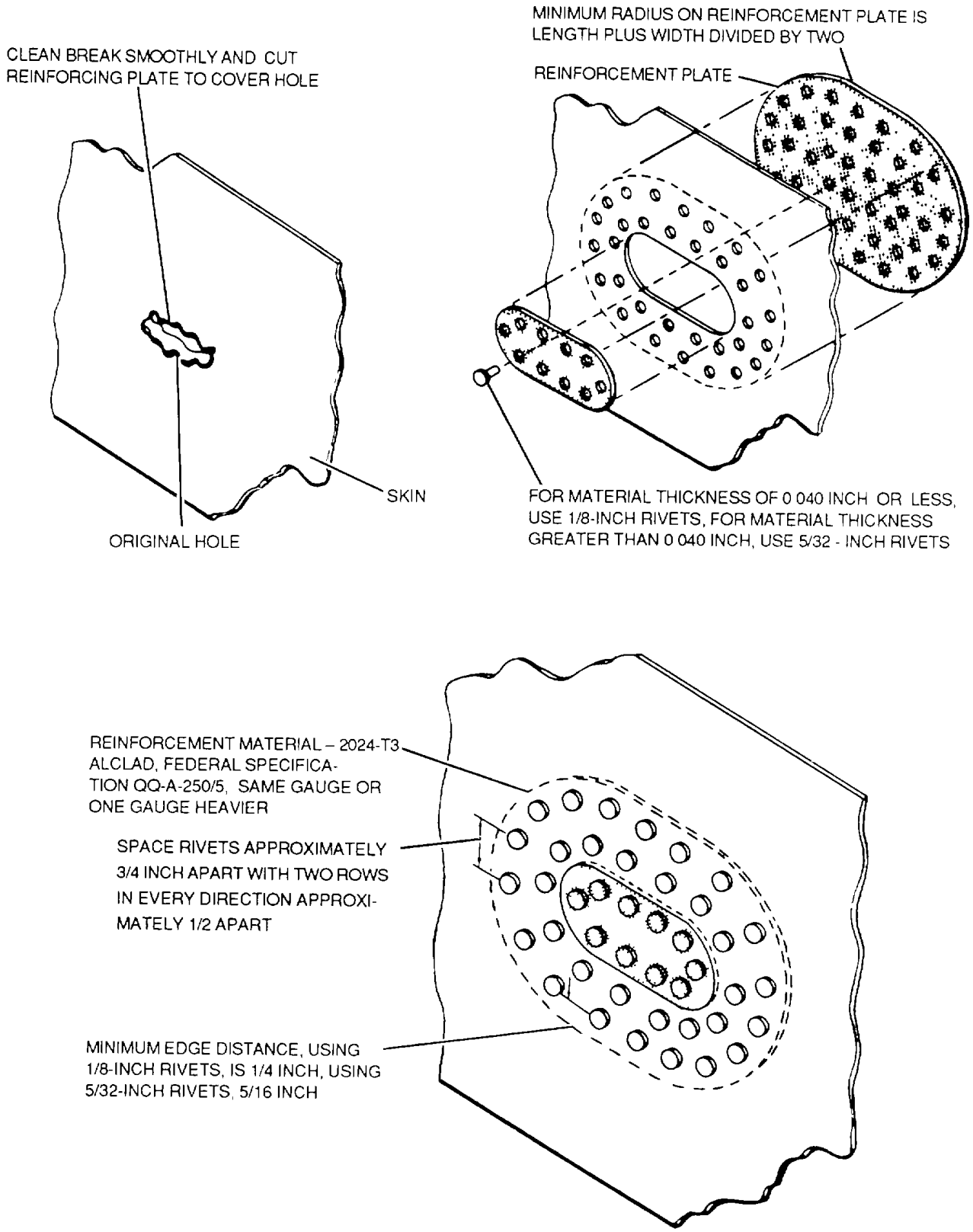

Figure 8-7. Flush Patch Repair Procedure

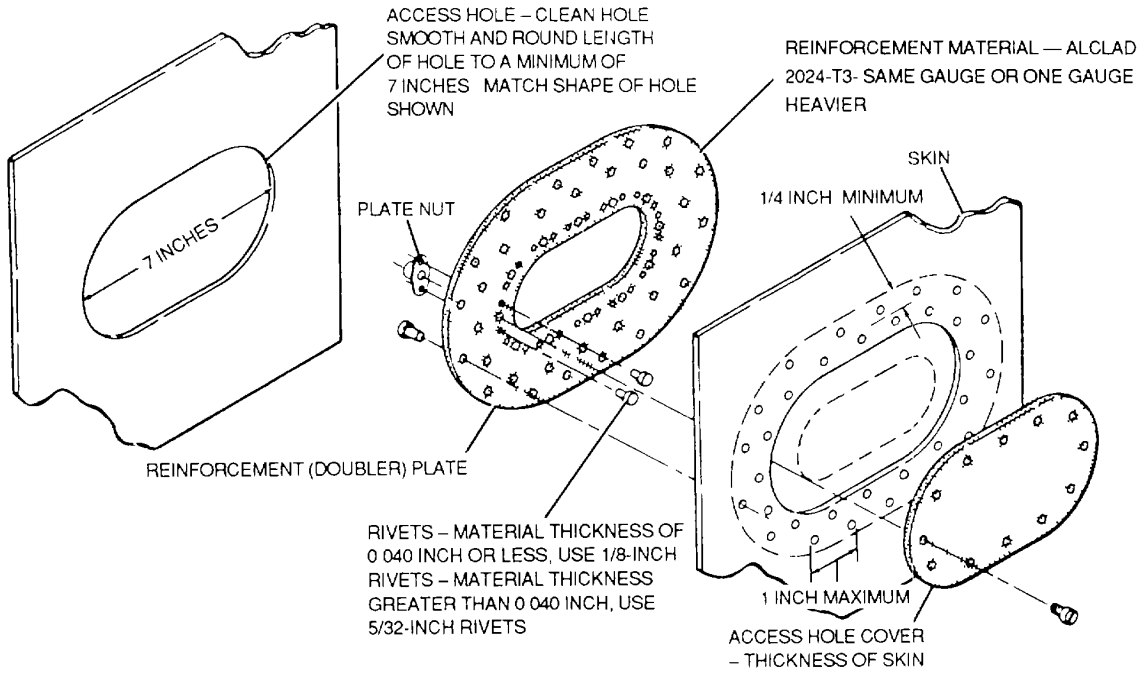

Figure 8-8. Flush Access Door

(1) Inspection. As in all other types of repair, the first step is to inspect the damaged area thoroughly to determine the extent of damage. Inspect the airframe for transmittal damage Structural members must be replaced or repaired when bent, fractured, or wrinkled. All rivets in the damaged area must be inspected for signs of failure They may be sheared considerably without visible external evidence of that shearing. Therefore, rivets must be removed at points in the damaged area and examined for signs of shear failure.

(2) Removal of damaged skin. As the skin panel is being removed, the rivet holes In stringers, longerons, bulkheads, formers, frames, and other internal members must be kept in the best possible condition. If any of these members are loosened by the removal of rivets, their locations should be marked so that they can be reinstalled in their original positions. The skin must not be mutilated when being removed, because in most cases it can be used as a template for laying out and drilling holes in the new piece of skin.

(3) Selecting proper skin material. Refer to the applicable skin panel diagram in the specific aircraft maintenance manual for the gauge and alloy of material to be used for the replacement panel. The size and shape of the panel may be determined in either of two ways: the dimension can be measured during inspection, or the old skin can be used as a template for laying out the new sheet. The latter method is preferable and more accurate in both cases, the new sheet may be cut with an overlap of 1 to 2 inches of material outside the rivet holes.

(4) Laying out new panel. If the old sheet is not too badly damaged, It should be flattened out and used as a template The new sheet should be drilled near the center using the holes in the old sheet as a guide The two sheets are then held together with Cleco fasteners. The drilling should then proceed from the center to the outside of the sheet, with Cleco fasteners being inserted at frequent intervals.

(5) Hole duplication methods. If the old sheet cannot be used as a template, there are a number of methods of duplicating the holes from the aircraft structure. These include back-drilling and marking.

(a) Back-drilling. using the holes in the reinforcing members as guides, and installing occasional Cleco fasteners as described in paragraph (4). The reinforcing members must be aligned and flush at the points where they intersect, otherwise, the holes in the new sheet will not be accurately aligned. For the same reasons, the new sheet should have the same contour as the old one before the rivet holes are drilled. The skin must also be held firmly against the framework while drilling. This can be done by placing a block of wood against the skin and holding it firmly while drilling.

(b) Marking. If all or part of the frame is not accessible from the inside, the new panel can be marked from the old one using a variety of methods.

1 *Pencil*. An aircraft marking pencil (MIL-P8395) can be used to mark through the holes In the old panel onto the new one.

2 *Transfer punch*. Another way to mark the location of the new holes is to use a transfer punch, as shown in figure 8-9. The punch is centered in the old hole and the new sheet lightly tapped with a mallet. The result should be a mark that will serve to locate the hole in the new sheet.

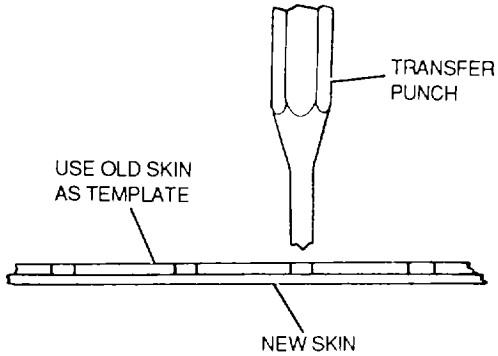

Figure 8-9. Use of Transfer Punch

3 *Hole finder.* This device allows holes to be drilled in the new section of skin that are perfectly aligned with the holes in the old section. This is shown in figure 8-10. The hole finder is made in two sections, an upper part and a lower part, which are bolted together at one end. At the free end of the bottom section of the finder is a guide rivet, which drops into the old holes in the sheet that are still in place. The free end of the top section of the hole finder has a hole in a position that exactly matches that of the guide rivet. The new hole is drilled through this opening. Thus, as the hole finder travels along, the guide rivet drops into an old hole and automatically determines the position of the new holes.

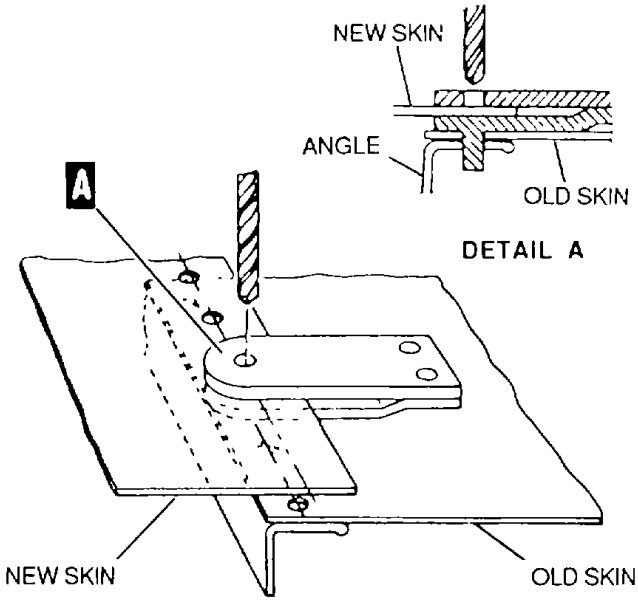

Figure 8-10. Use of Hole Finder

(6) Deburring. After all the holes have been drilled, the Cleco fasteners are removed and the sheet is removed from the framework. The holes in the skin, stringers, and the ribs must be deburred on both sides to prevent faulty attachment of the skin to the framework.

(7) Riveting. The new skin is ready to be riveted onto the structure in accordance with the techniques outlined in Chapter 7 of this manual.

b. Circular External Repair. This repair, also called the coin patch repair, is Intended for dents, punctures, tears and small cracks that can be cut out within a minimum of 1/2 inch but not exceeding 1 1/2 Inch diameter. All patches must clear adjacent structural members by 1/8 Inch and be sealed. Refer to applicable aircraft maintenance manual for information on water-tightness sealing. The following procedure is shown in figure 8-11.

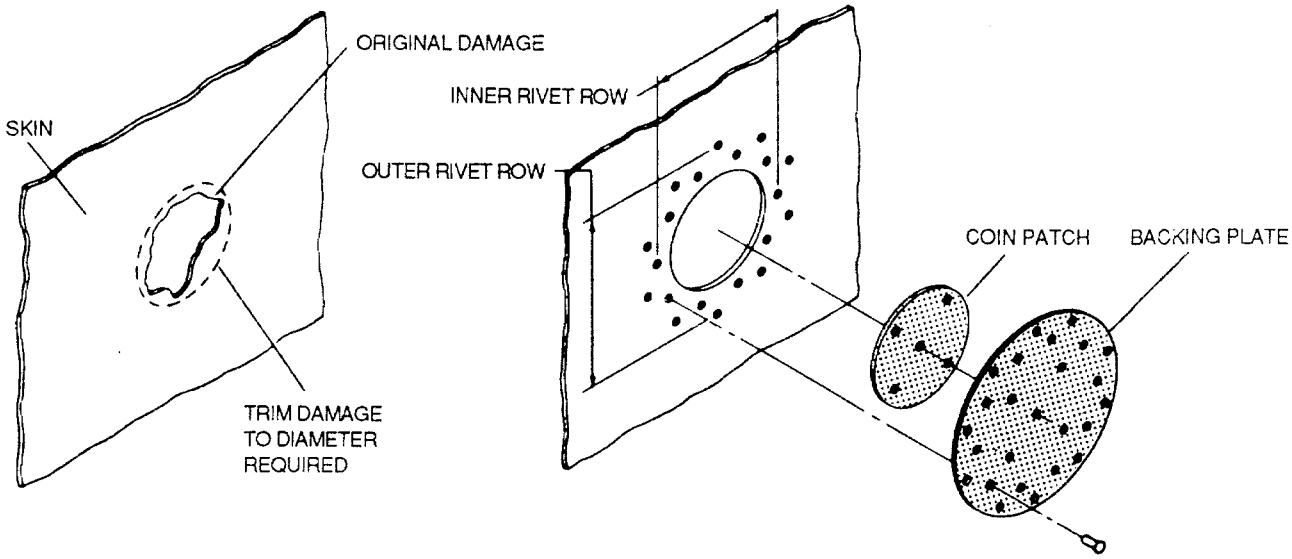

COIN PATCH DIAMETER	RIVET ROW DIAMETER		BACKING PLATE
	INNER	OUTER	DIAMETER
–	0.75 / 0.87	1.25 / 1.37	1.75 / 1.87
–	0.875 / 0.995	1.375 / 1.495	1.875 / 1.995
0.50	1.0 / 1.12	1.5 / 1.62	2.0 / 2.12
0.625	1.125 / 1.245	1.625 / 1.745	2.125 / 2.245
0.75	1.25 / 1.37	1.75 / 1.87	2.25 / 2.37
0.875	1.375 / 1.495	1.875 / 1.995	2.375 / 2.495
1.0	1.5 / 1.62	2.0 / 2.12	2.5 / 2.62
1.25	1.75 / 1.87	2.25 / 2.37	2.75 / 2.87
1.50	2.0 / 2.12	2.5 / 2.62	3.0 / 3.12
1.75	2.25 / 2.37	2.75 / 2.87	3.25 / 3.37

NOTE;
DIMENSIONS ABOVE DIAGONAL LINE ARE FOR MATERIAL THICKNESS LESS THAN 0.032 INCH; THOSE BELOW ARE FOR MATERIAL THICKNESS GREATER THAN 0.032 INCH

Figure 8-11. Circular External Repair

(1) Cut out the damage and make a coin patch of the same material and thickness as the skin. The patch should have a diameter 1/16 inch less than the cutout.

(2) Make a circular backing plate three times the diameter of the coin patch and from the same material but in the next heavier thickness.

(3) Smooth the edges of the cutout, coin patch, and backing plate with a file.

(4) Center the coin patch on the backing plate and drill rivet holes through the coin patch and backing plate.

NOTE

The size and number of the rivet holes are determined by the size of the rivet to be used. In most cases rivets, MS20470AD-3 can be used.

(5) Install and set the rivets.

(6) Spray or brush a thin coat of epoxy primer (MIL-P-23377) on all surfaces of the coin patch. Allow the primer to dry.

(7) Insert the coin patch in the cutout from inside the skin. Drill rivet holes through the backing plate and skin.

NOTE

Use rivets MS20470AD-4 for 0.025-inch thick skin, and rivets, MS20470AD-5 for skin 0.03 inch or thicker. Rivet pitch should be approximately 0.75 inch.

(8) Remove the coin patch from the cutout after establishing a rivet pattern and seal the faying surface of the cutout and coin patch.

(9) If the damage is less than 1/2 inch and larger than 3/16 inch and located over an undamaged frame or stiffener, repair the damage by omitting the backing plate. Rivet the coin patch to the frame or stiffener.

(10) Install and set the rivets.

NOTE

Repair magnesium skin as directed in preceding steps, providing dissimilar metals are insulated as directed in paragraph 8-6h. Use rivets MS20470B.

c. Temporary Patch Repairs. Holes or cracks in the skin panels within the negligible limits applicable to the area can be repaired temporarily using fabric or tape-patches. Damage considered allowable for one-time flights can also be repaired by this method. The repaired area should not be painted so it can easily be detected for permanent repair.

(1) Fabric patches. Repair holes and cracks with fabric patches as follows:

(a) Stop-drill the cracks or trim the hole. Smooth the edges of the hole with a file.

(b) Remove the paintfrom the area surrounding the damage using acetone (0-A-51) or thinner TT-T-266).

(c) Cut a pinked-edge patch from cloth (MIL-C-5646).

(d) Apply a coat of clear cellulose nitrate dope (MIL-D-5549) to the area surrounding the damage.

(e) Apply the patch while the dope is wet. Smooth the patch to remove all wrinkles.

(f) Remove excess dope and allow the patch to dry.

(g) Apply two additional coats of dope to the patch. Allow sufficient drying time between coats.

(2) Tape patches. Repair holes and cracks with tape patches as follows:

(a) Repeat steps (1)(a) and (1)(b) as required.

(b) Cut an oval or round patch from aluminum backed pressure-sentitive adhesive tape (L-T-80).

(c) Apply the patch to the damaged area using rubber roller, while exerting pressure, particularly around the edges of the patch.

8-9. Internal and External Repairs. This paragraph describes typical repairs of the major structural parts of an airplane and helicopter as discussed in Chapter 4 of this manual. These repairs are typical, and general in nature. The applicable aircraft maintenance manual must always be consulted for specific requirements and procedures for a particular repair situation.

a. Stringer Repair. Stringers may be damaged by vibration, corrosion, or collision. Usually the damage involves other parts such as the skin or a bulkhead or former. Repair methods differ by the shape of the stringer and the extent of the damage.

(1) Patching. Figure 8-12 shows a stringer repair by patching. This repair is permissible when the damage does not exceed 2/3 of the width of one leg and is not more than 12 inches long. Damage exceeding these limits can be repaired by one of the methods in (2)or (3).

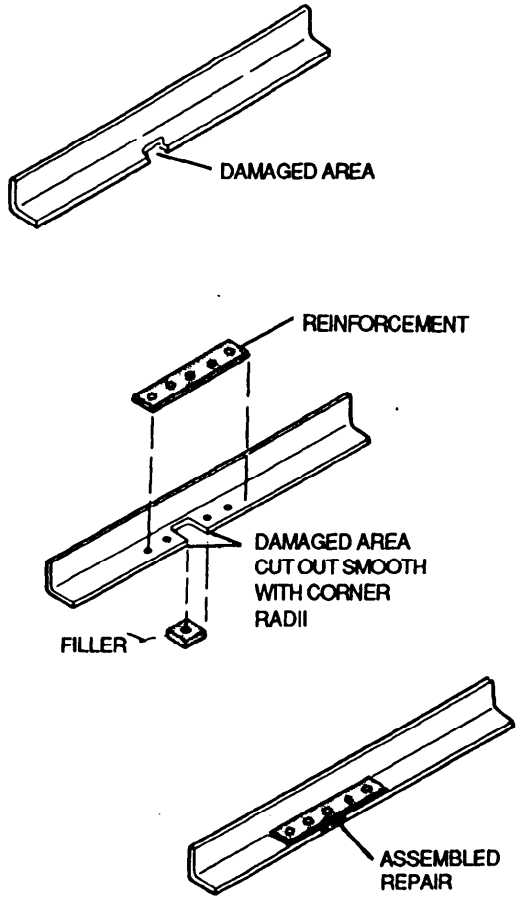

Figure 8-12. Stringer Repair by Patching

(2) Repair by insertion where damage exceeds two thirds of one leg in width. Figure 8-13 shows this repair after a portion of the stringer is removed.

(3) Repair by insertion where damage affects only one stringer. See figure 8-14 for repair of a stringer when the damage exceeds 12 inches in length.

(4) Repair by insertion where damage affects more than one stringer. See figure 8-15 for this type of repair.

(5) J-section stringer splice repair. See figure 8-16 for this type of repair.

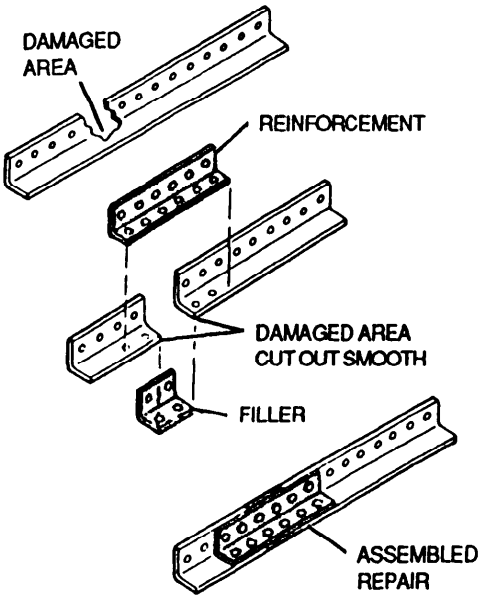

Figure 8-13. Stringer Repair by Insertion When Damage Exceeds Two Thirds of One Leg In Width

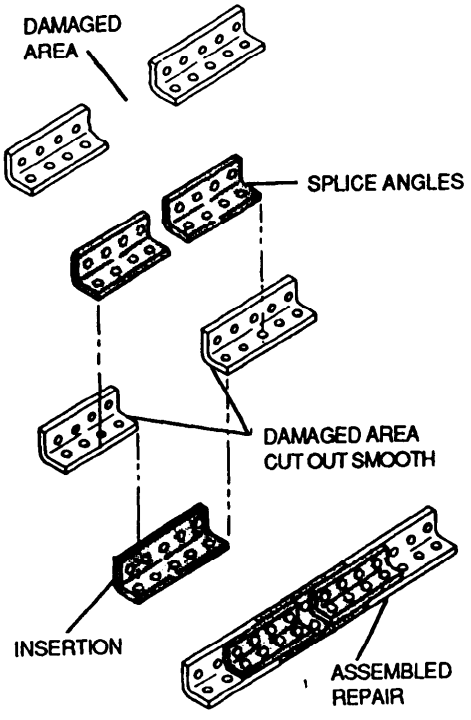

Figure 8-14. Stringer Repair by Insertion When Damage Affects Only One Stringer

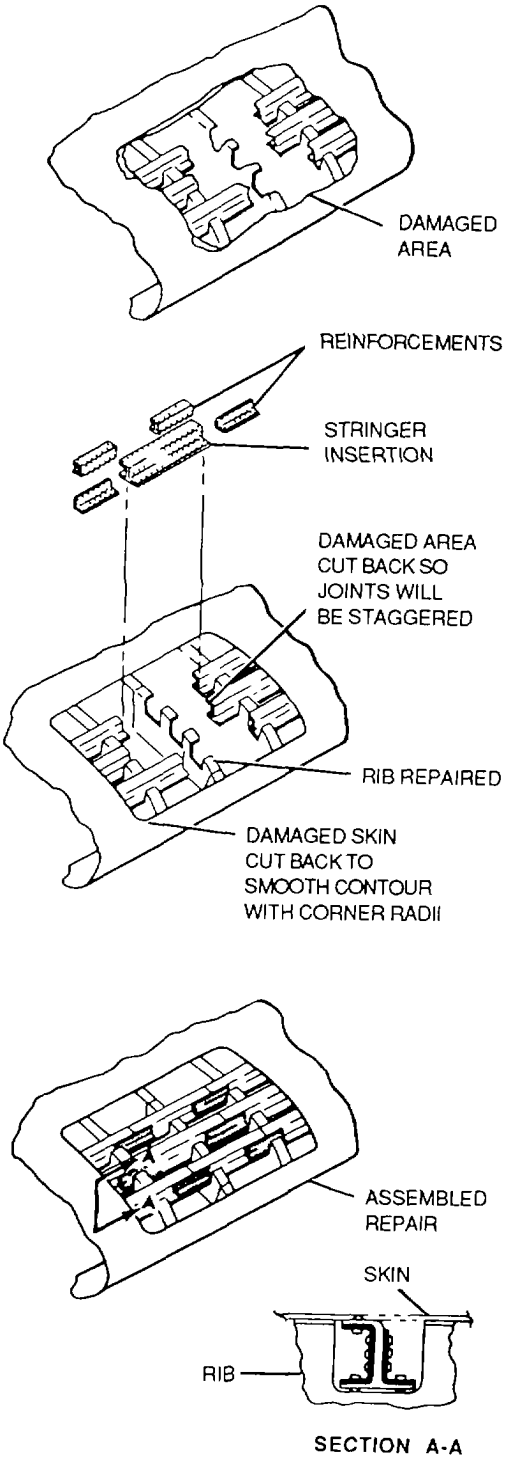

Figure 8-15. Stringer Repair by Insertion When Damage Affects More Than One Stringer

(6) Stringer repair with formed angle. This repair is shown in figure 8-17.

(7) Cracks in radius of stringer ends. This type of defect requires installing a reinforcement patch to hold the stringer end in place. It is shown in figure 8-18.

b. Longeron Repair. Longerons are usually fairly heavy and serve as the primary lengthwise structural members. They serve approximately the same purpose as stringers, but they can be recognized as different from the latter by their heavier size and continuous length through the aircraft or structural section of it. If the longeron consists of a formed section and an extruded angle section, it Is known as a composite structural member in which each section will normally be evaluated separately. The extruded section In such a composite member will be repaired In the same manner as the stringer.

c. Spar Repair by Insertion. Repairs on spars may not be permitted because of the critical stresses imposed on them. However, if repairs are made, they are usually made by insertion, as shown in figure 8-19, and they must be made according to instructions in the applicable aircraft maintenance manual

d. Spar Angle Repair This repair is shown in figure 8-20.

e. Spar Web Repair. Repair of the spar web is described in figure 8-21.

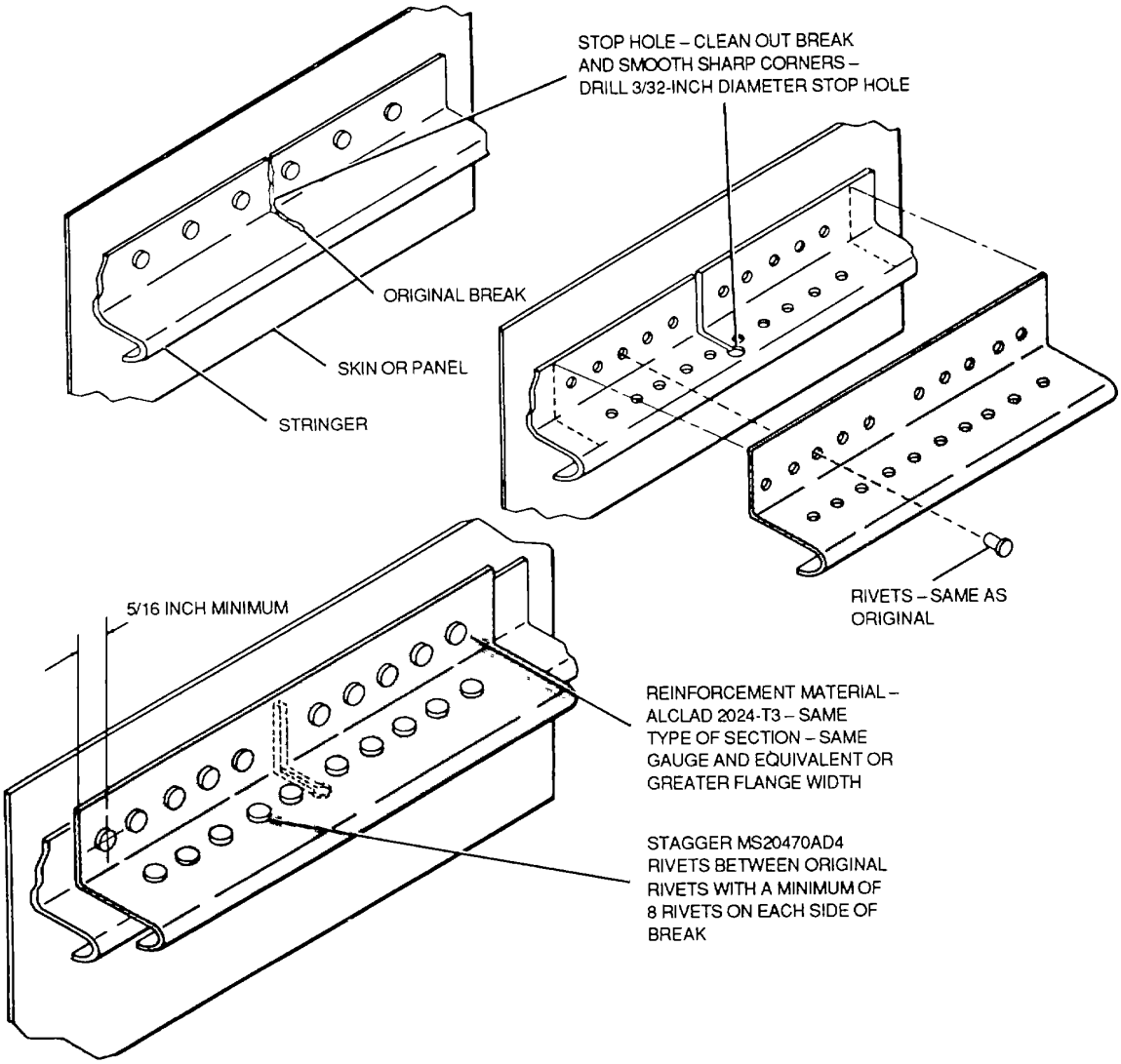

Figure 8-16. J-Section Stringer Splice Repair

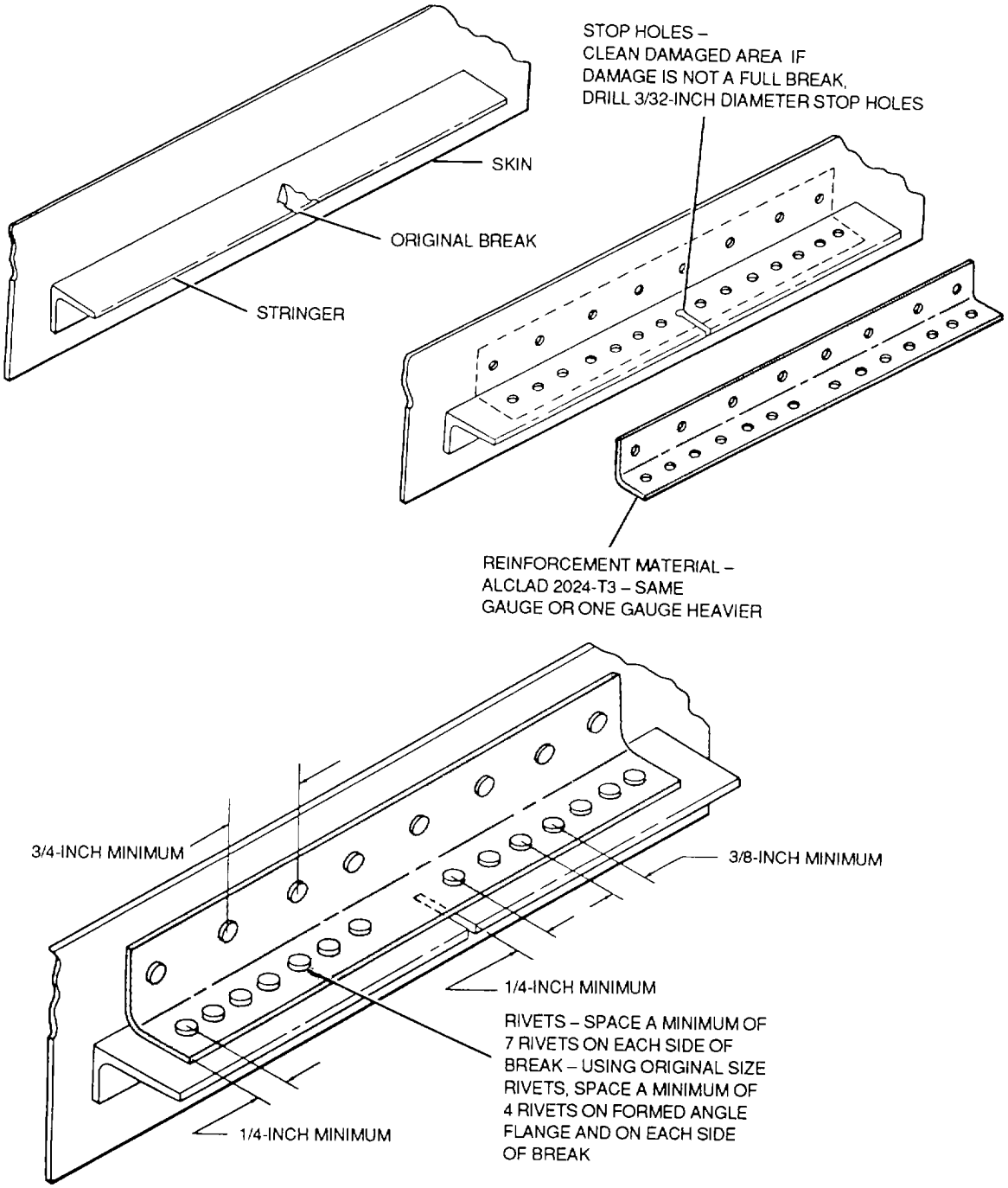

Figure 8-17. Stringer Repair with Formed Angle

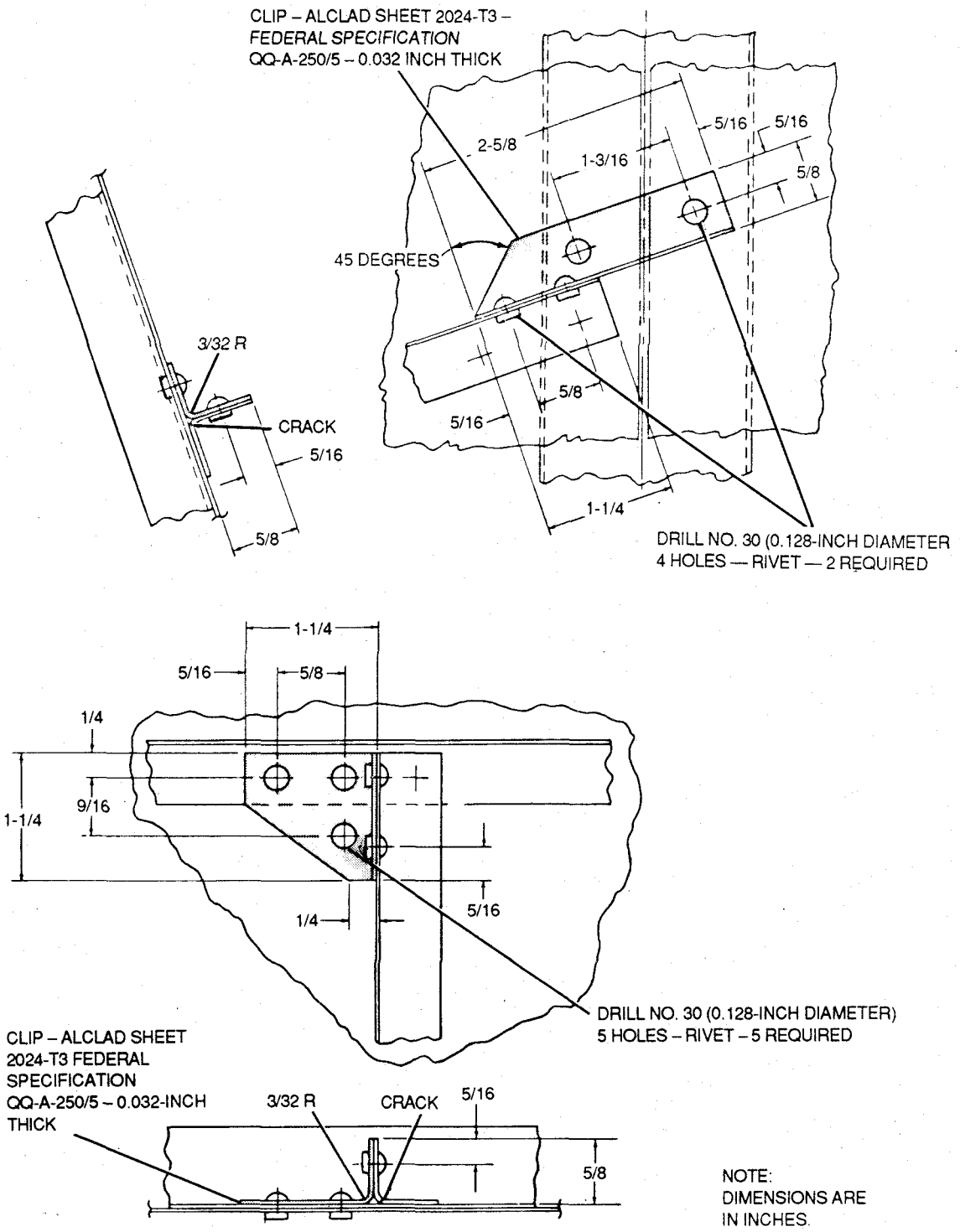

Figure 8-18. Typical Repairs for Cracks in Radius of Stringer End

f. *Rib Repair by Patching*. Figures 8-22 and 8-23 show repair of nose and wing ribs by patching

g. *Rib Repair by Insertion.* This type of repair, shown in figure 8-24, is required when an entire portion of the rib is damaged.

h. *Former Repair*. Former repair by patching is shown in figure 8-25.

i. *Bulkhead Repair*. A typical repair of a bulkhead flanged member is shown in figure 8-26. Damage that involves a bulkhead or frame and the aircraft skin is shown in figures 8-27 and 8-28.

j. *Repair of Damaged Channels*. Channels can be

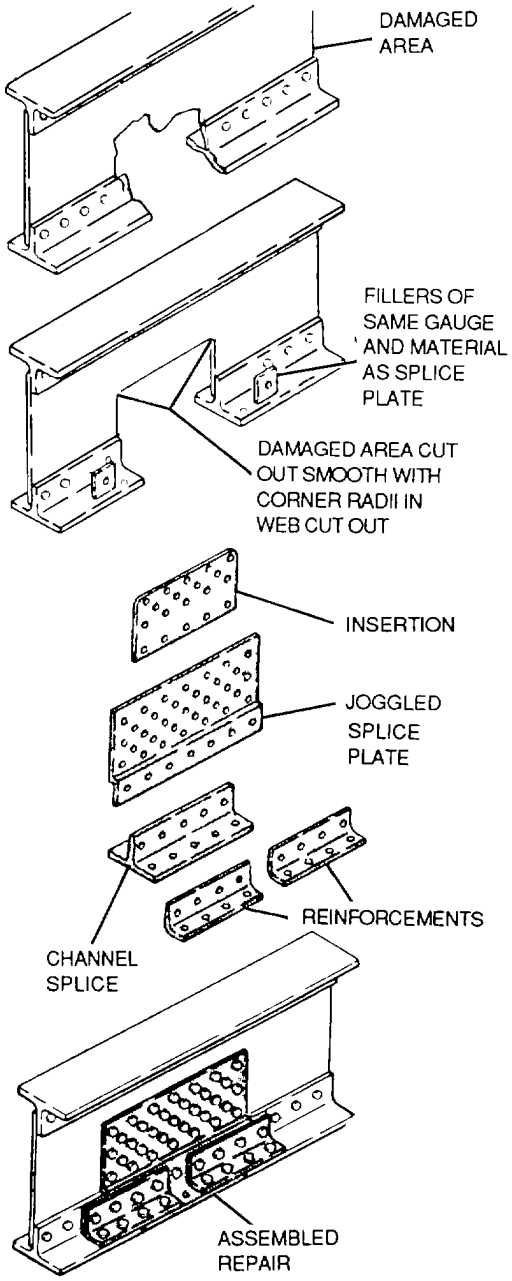

Figure 8-19. Spar Repair by Insertion

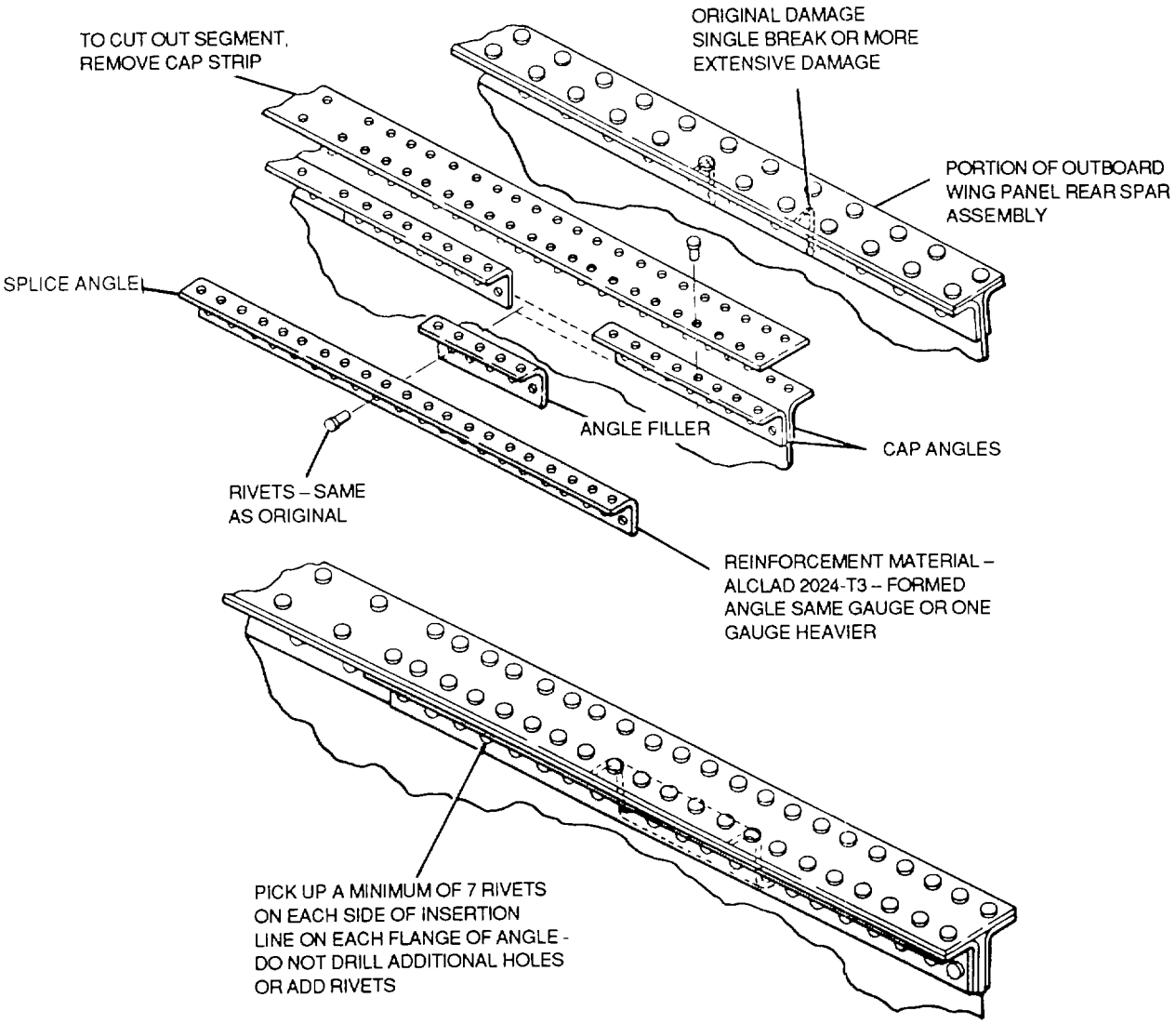

Figure 8-20. Spar Angle Repair

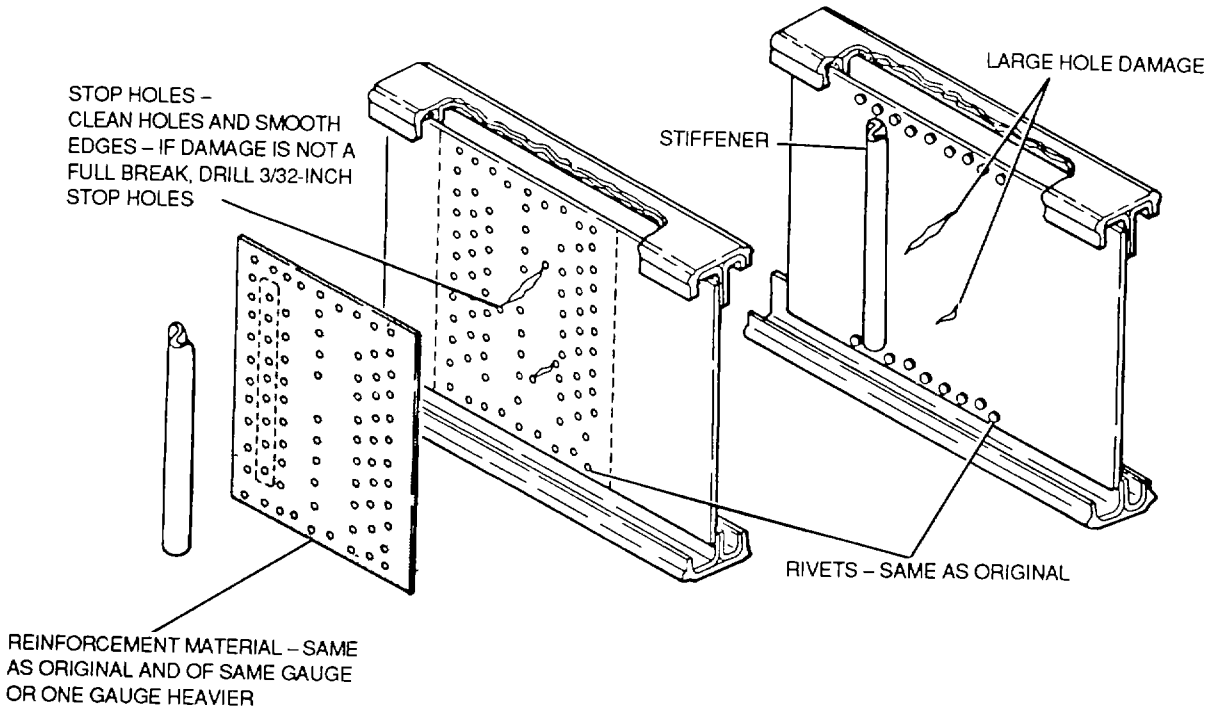

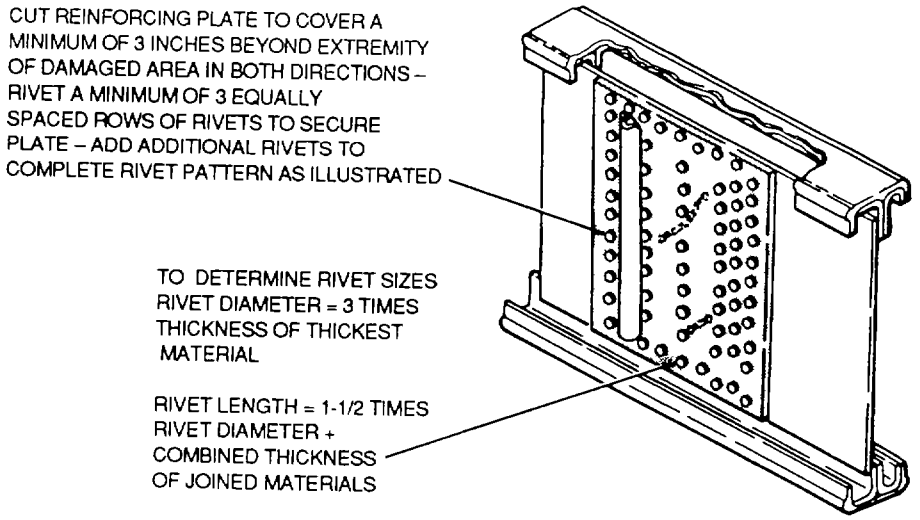

Figure 8-21. Spar Web Repair

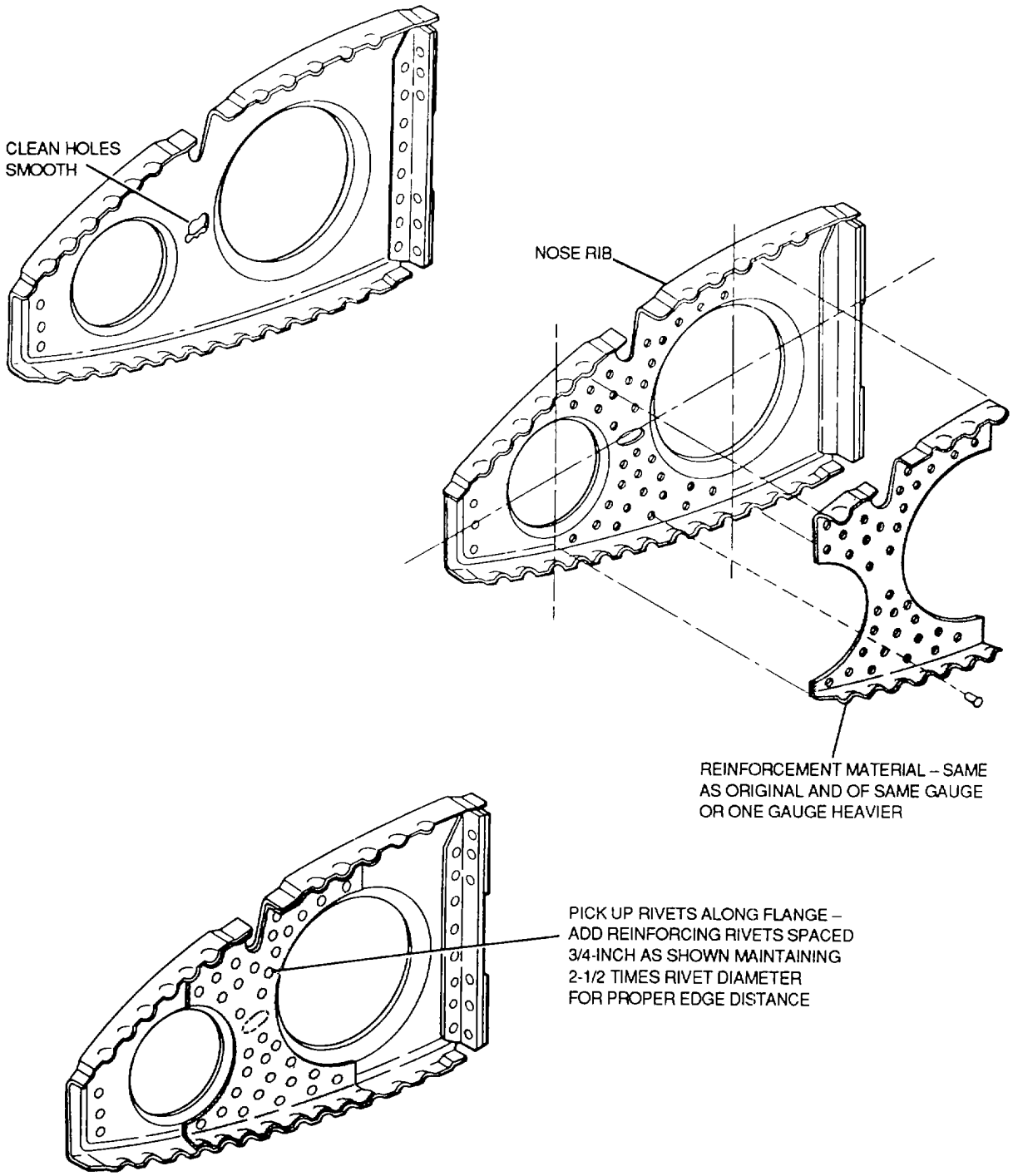

Figure 8-22. Nose Rib Repair

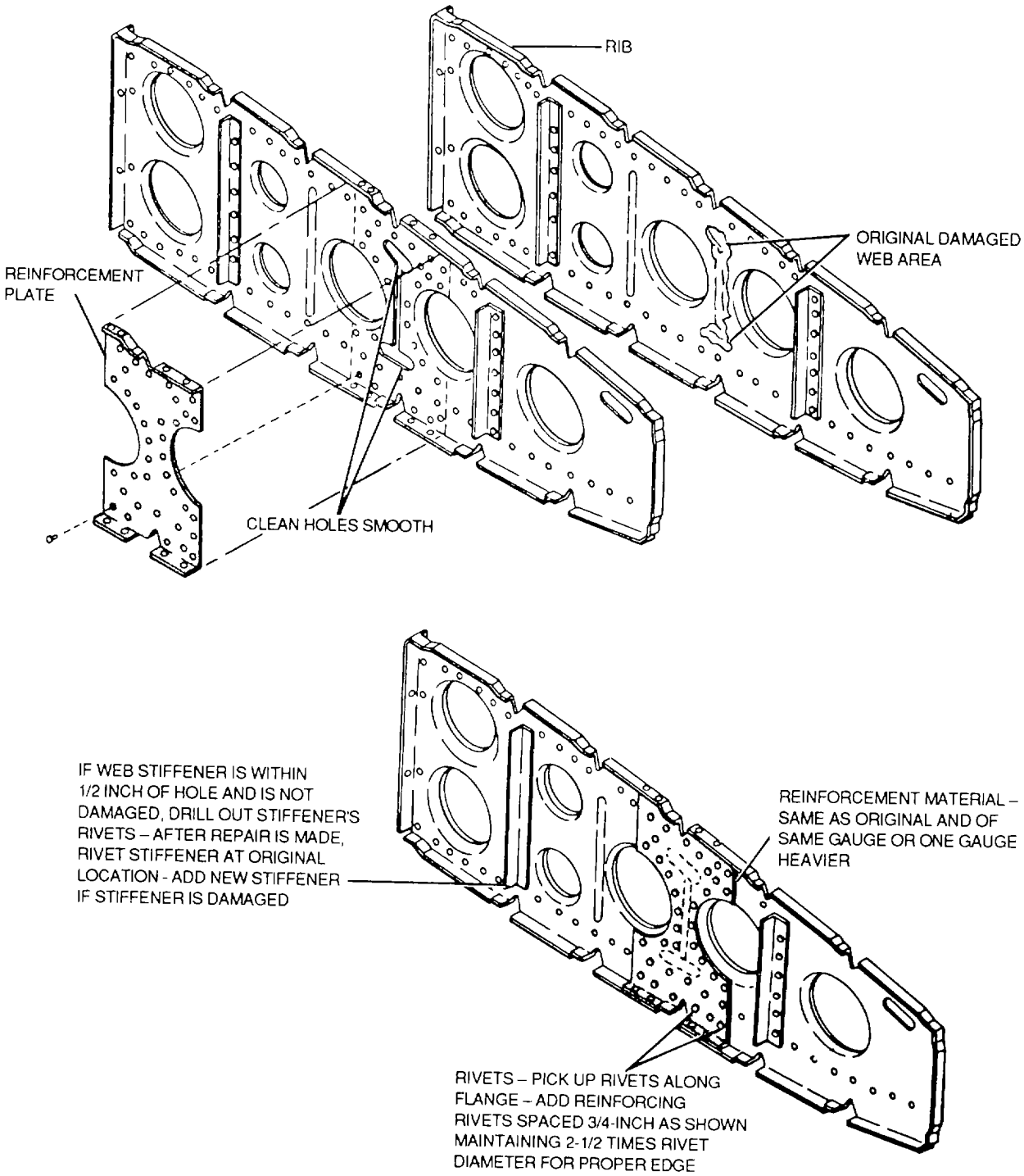

Figure 8-23. Wing Rib Repair

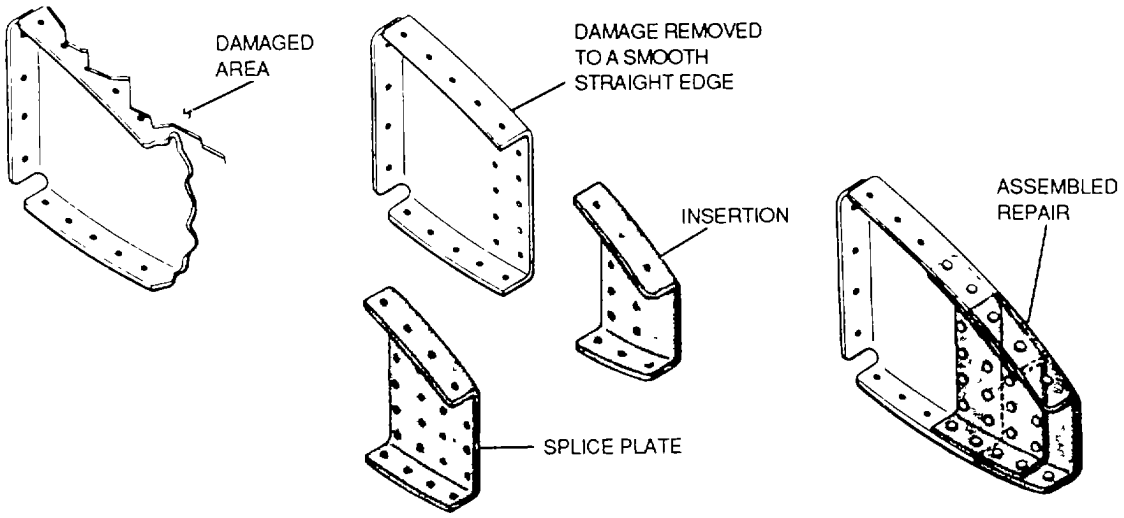

Figure 8-24. Rib Repair by Insertion

repaired by patching method of repair, and repair by insertion is shown in figure 8-30.

k. *Repair of Cracks by Stop-Drilling*. A crack develops at the point where stress is concentrated and it is usually compounded by repetitive stress such as vibration. This stress must be relieved to prevent the crack from continuing. This procedure is called stop-drilling, and is shown in figure 8-31. In normal circumstances, a 3/32 or 1/8 inch hole drilled at each end and sharp turn of a crack will accomplish this. Stop-drilling is a temporary repair. It requires follow up with another reinforcing repair.

l. *Repair of Dents and Creases*. In most situations involving dents and creases, the repair procedure is basically the same. As shown In figure 8-32, the dent or crease is tapped out with a mallet using a wood block for support and a reinforcement is riveted in place. The exact procedure is subject to the applicable aircraft maintenance manual, or the judgment of the unit maintenance officer.

m. *Repair of Damaged Frame or Beam*. Figure 8-33 show the typical repair for a nonstressed frame, and figure 8-34 shows typical stressed beam repair.

n. *Repair of Frame and Stringer*. Joint When damage involves the skin and the intersection of a stringer with a frame, the repair shown in figure 8-35 can be used.

o. *Floor Channel Repair*. The floor channel repair shown in figure 8-36 Involves typical patching procedures.

p. *Splice Repair of Hat Section*. A typical splice repair of a cracked or broken hat section is shown in figure 8-37. If it is partially cracked, the crack must be stop-drilled prior to installation of the splice.

q. *Nonstressed Skin and Frame Repair*. Figure 8-38 shows the repair of damage incurred to nonstressed skin and its supporting structure.

r. *Longitudinal Skin Joint*. A longitudinal skin joint is created when a sheet is added using the same line of rivets as the original, as shown in figure 8-39.

s. *Transverse Skin Joint*. A transverse skin joint uses two staggered rows of rivets to add a sheet as shown in figure 8-40.

t. *Rivet Spacing, Selection and Acceptability Limits for a Nonstressed Skin Patch*. Figures 8-41 through 8-43 contain the rivet spacing requirements for various types of patch repairs. Table 8-1 shows minimum rivet edge distances for protruding and countersunk head rivets. These edge distances are applicable only to rows of 3 or more rivets, where a row contains a maximum of 30 percent of the total number of rivets. Table 8-2 through 8-4 show the recommended types of repair rivets and their spacing for the repairs of

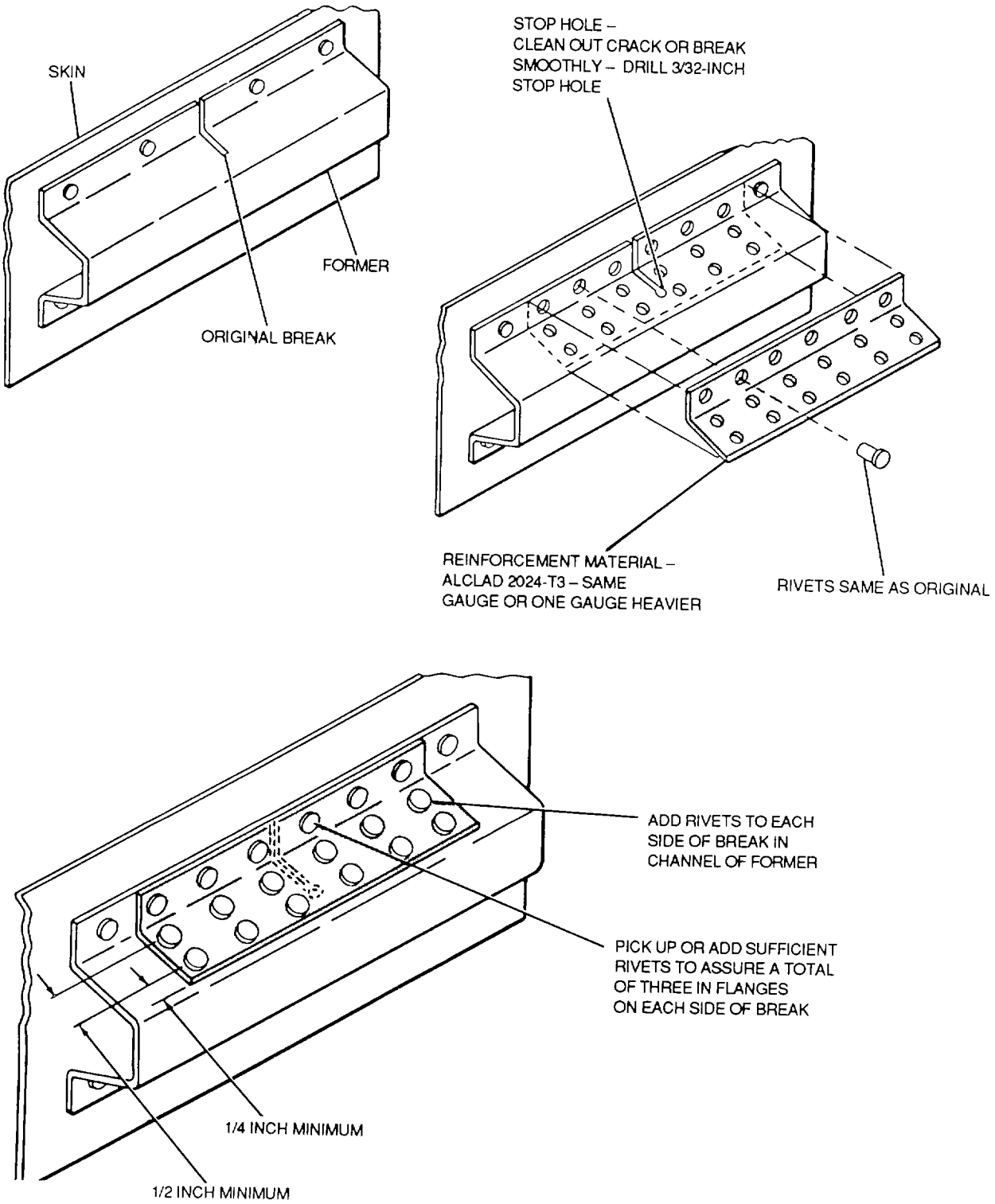

Figure 8-25. Former Repair

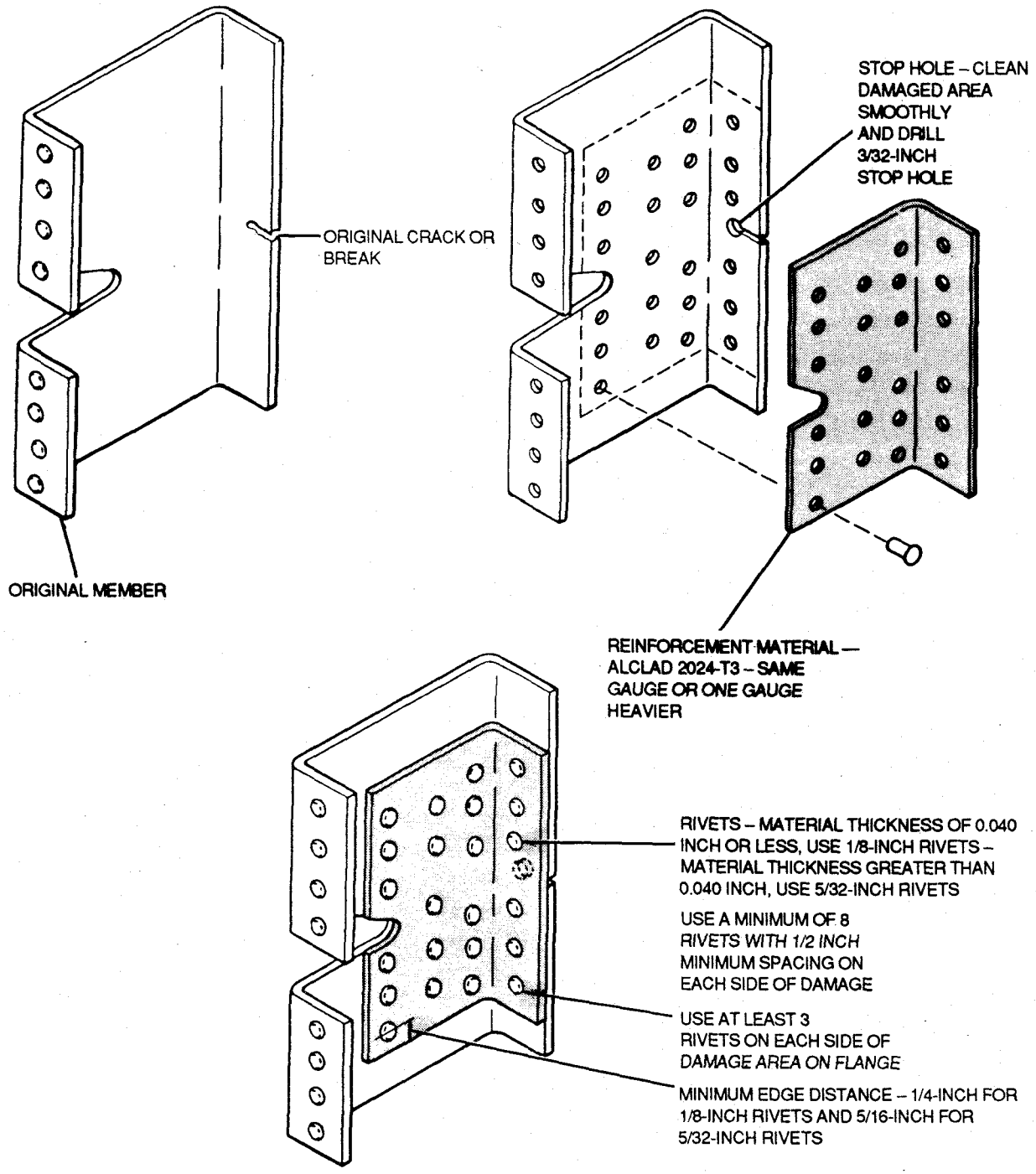

Figure 8-26. Bulkhead Flanged Member Repairs

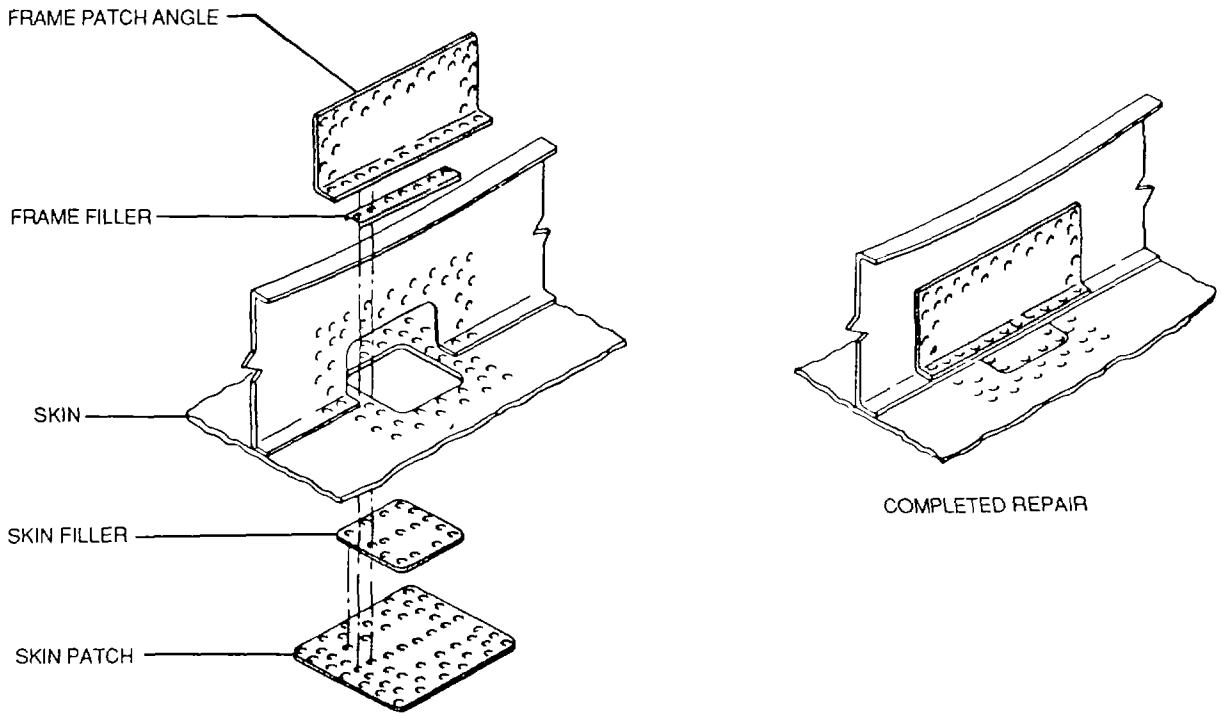

Figure 8-27. Frame and Skin Repair

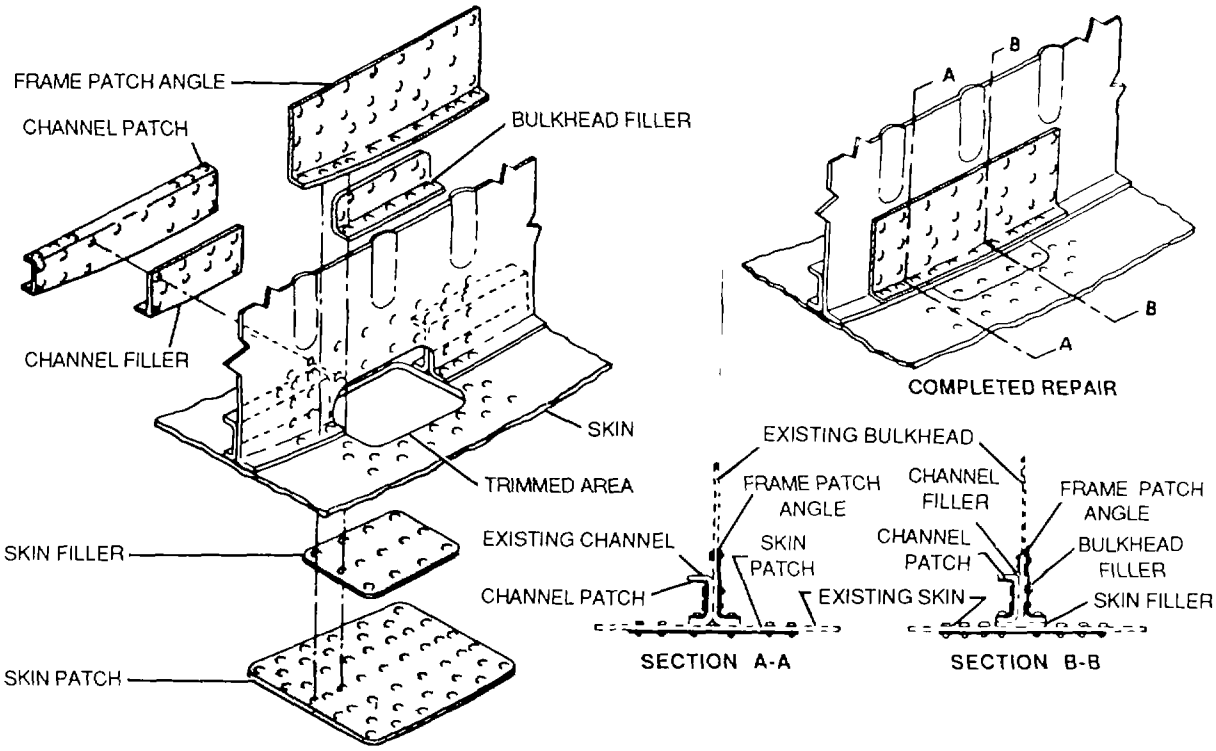

Figure 8-28. Bulkhead and Skin Repair

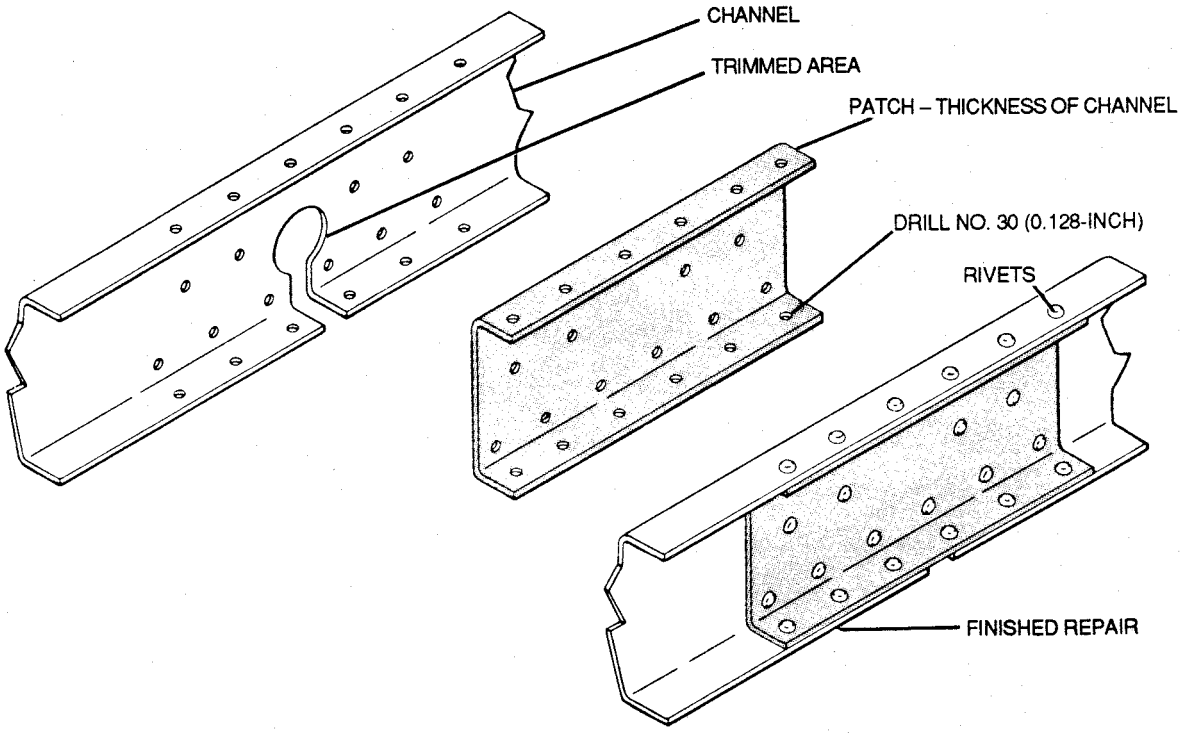

Figure 8-29. Channel Repair by Patching

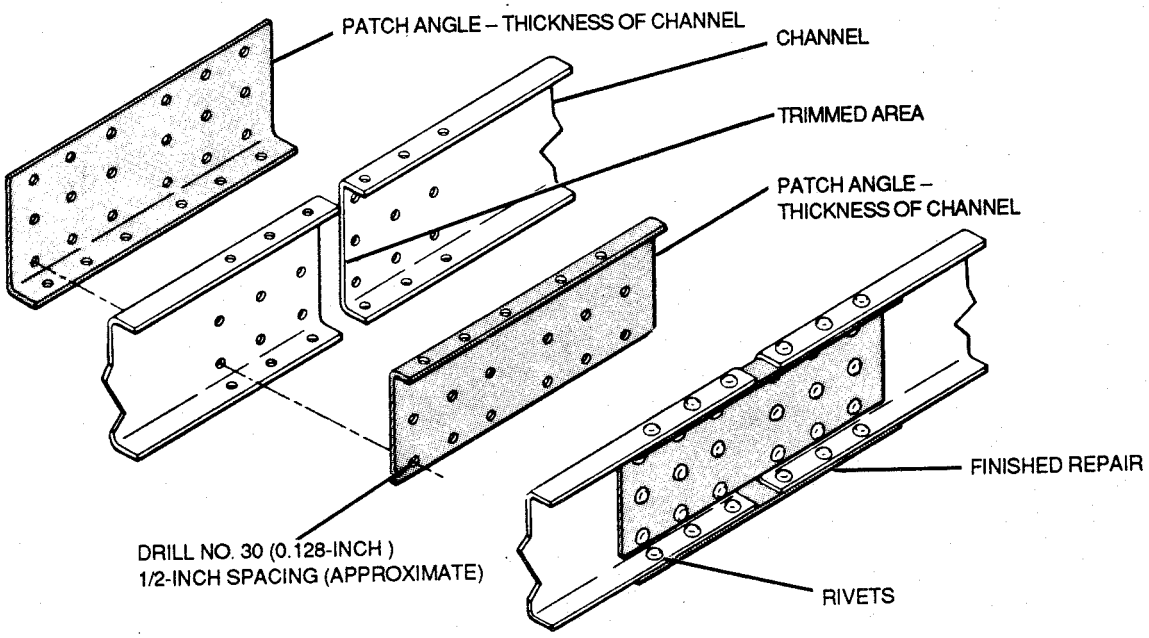

Figure 8-30. Channel Repair by Insertion

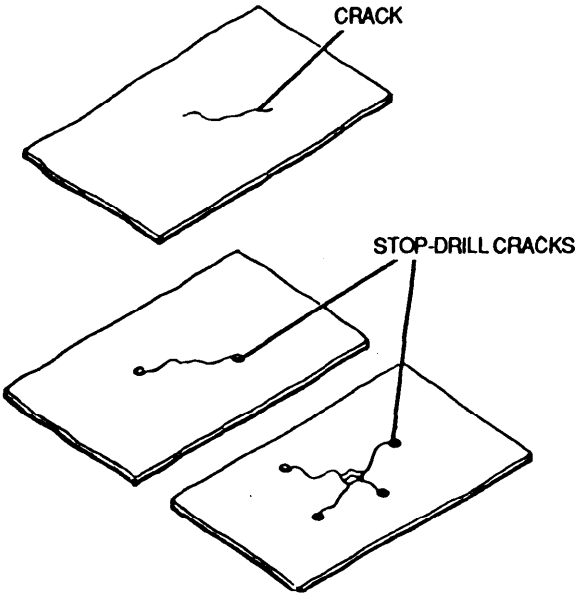

Figure 8-31. Repair of Cracks by Stop-Drilling.

aluminum alloy, corrosion resistant steel, and magnesium alloy parts.

u. Skin and Web Repairs, Skin and web repairs are generally divided into classifications for lightly stressed and heavily stressed areas. Figures 8-44 through 8-47 show general repair layout for heavily stressed areas. Figures 8-48 through 8-53 show general repair layout for heavily stressed areas. Table 8-5 shows the material selections for the patches shown in these figures. This table may be used when a specific repair reference denoting a specific repair material does not exist for a particular part.

v. Repair of Heavily Stressed Support and Stiffener. Figure 8-54 shows this repair.

w. Stressed Skin Repair. Two methods for producing a frame and skin patch in a stressed area are shown in figure 8-55.

x. Repair for Damaged Skin Close to a Frame. Figure 8-56 shows the requirements for this type of repair.

y. Patch Repairs to Beaded Skin. This type of repair is common on some flight control surfaces on smaller aircraft. It is shown in figure 8-57.

z. Patch Repair to Damaged Swage in Aileron and Flap Skin. This repair is shown in figure 8-58.

aa. Eliminating Gaps and Leveling Installations, If gaps appear in a structure either before or after a repair, they can be repaired by the various methods shown in figure 8-59.

8-10. Structural Sealing. Various areas of airframe structures are sealed compartments where fuels or air must be confined. Some of these areas contain fuel tanks others consist of pressurized compartments such as the cabin. Because it is impossible to seal these areas completely airtight with a riveted joint alone, a sealing compound or sealant must be used. Sealantsare also used to add aerodynamic smoothness to exposed surfaces such as seams and joints in the wings and fuselage.

a. Types of Seals. The types of seals ordinarily used are rubber seals, sealing compounds, and special seals.

(1) Rubber seals. Rubber seals are installed at points where frequent breaking of the seal is necessary, such as emergency exits and entrance doors.

(2) Sealing compounds. Sealing compoundsare used at points where the seal is broken only for structural maintenance or part replacement.

(3) Special seals. Special seals are required for passing cables, tubing, mechanical linkages, or wiring out of the pressurized or sealed areas.

b. Wires and Tubes. Wires and tubes are passed through pressure bulkheads by using bulkhead fittings such as Cannon plugs for wiring and couplings for tubing. These fittings are sealed to the bulkhead and the wires and tubes are fastened to them from each side. All seals of moving components such as flight controls are subject to wear, and utmost care must be used when they are installed. They must also be inspected regularly.

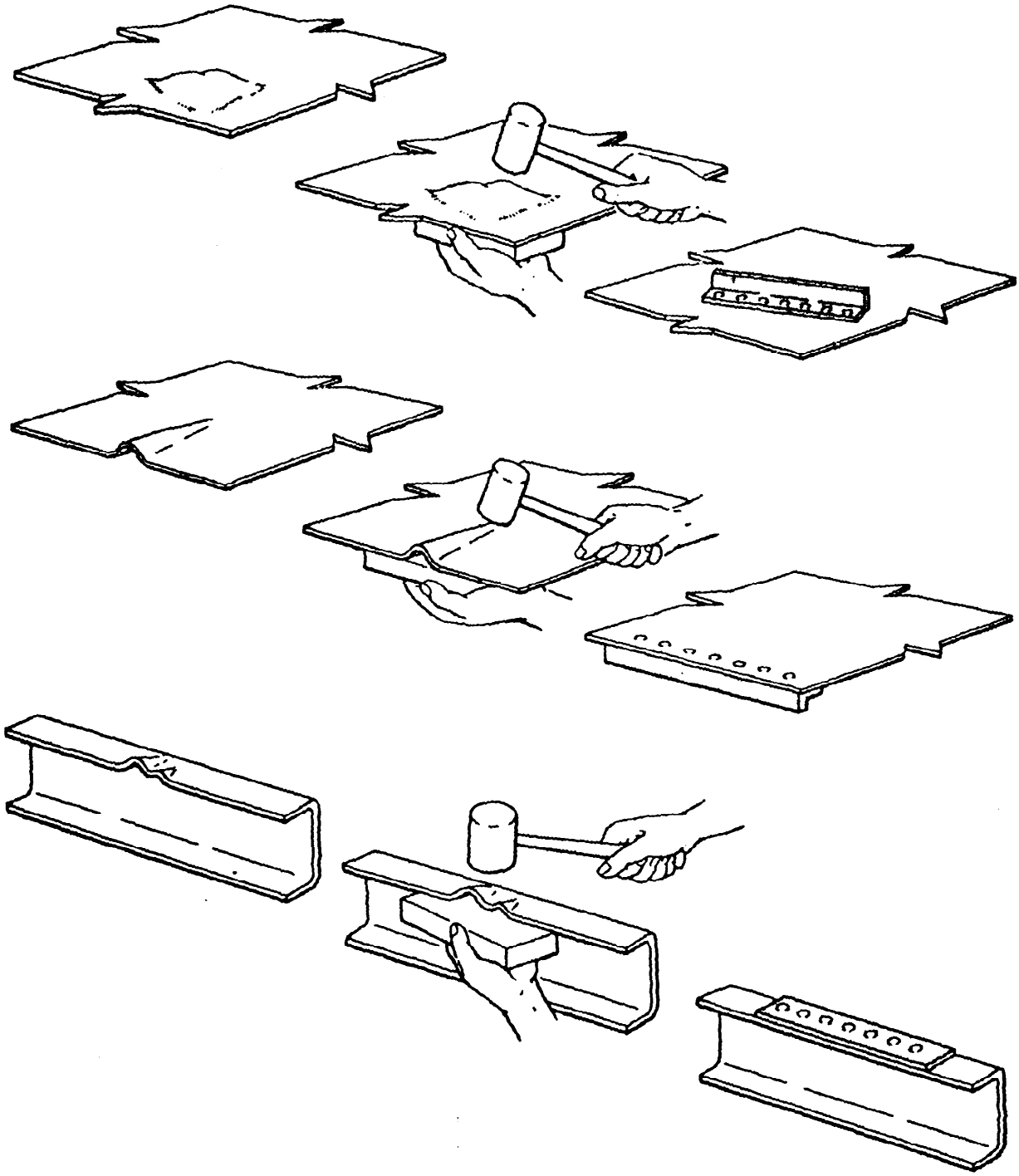

Figure 8-32. Repair of Dents and Creases

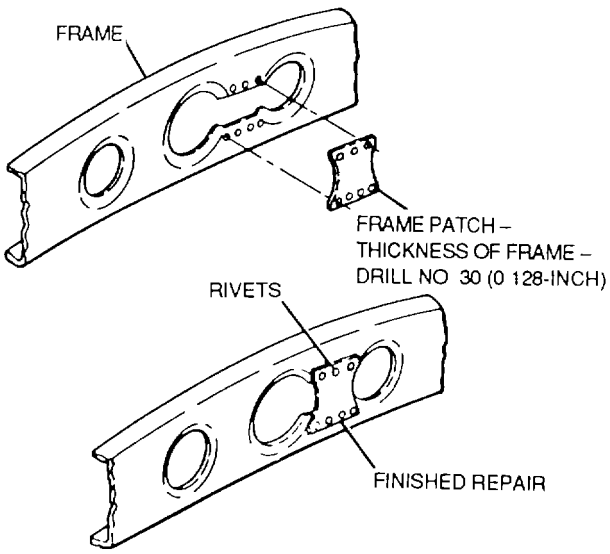

Figure 8-33. Nonstressed Frame Repair.

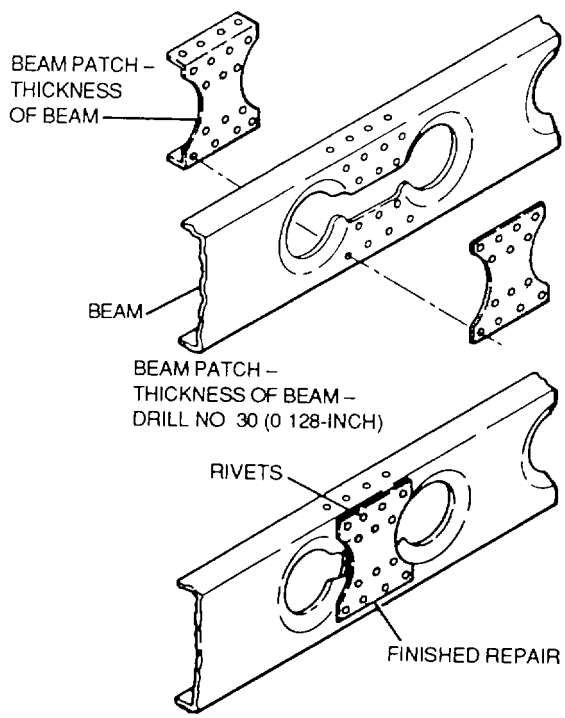

Figure 8-34. Stressed Beam Repair.

c. Sealant Defects. Pressure tightness of an area or section is checked before and after a repair is made. Ground pressurization is accomplished by filling the section with air from an external source through ground pressure test fittings.

(1) General pressurization procedures. With the sections pressurized to a given pressure, locate leaks on the outside of the aircraft by applying a soapless bubble solution to all seams and joints in the suspected area. Air bubbles will locate the general area of leakage. A specific leak is then isolated on the inside of the aircraft by passing the free end of a stethoscope or similar listening device along the seams in the leakage area. The leak can be detected by the change in sound when the instrument passes over it. After completing the test, remove the soapless bubble solution from the outside of the aircraft by washing with clear water to prevent corrosion.

(2) Precautions. Observe the following precautions when pressurizing an aircraft.

- Never pressurize to a pressure higher than the limit established by previous testing.
- No person who has a cold or who has recently had one, or whose sinuses are impaired in any way, should work in the pressurized section of the aircraft.
- A qualified operator should be at the pressurization control panel at all times while the aircraft is being pressurized.

(3) Other sealant defects. Pressurization may not always be necessary to locate defective seals. Seals should be repaired when one or more of the following conditions exist.

- Sealants have been peeled away from the structure.
- Seams are exposed through the sealant fillet.
- Fillet or hole-filling sealant is exposed through the smooth overcoating.
- Sealant is damaged by the removal and reinstallation of fasteners, access doors, or other sealed parts.
- Cracks or abrasions exist in the sealant

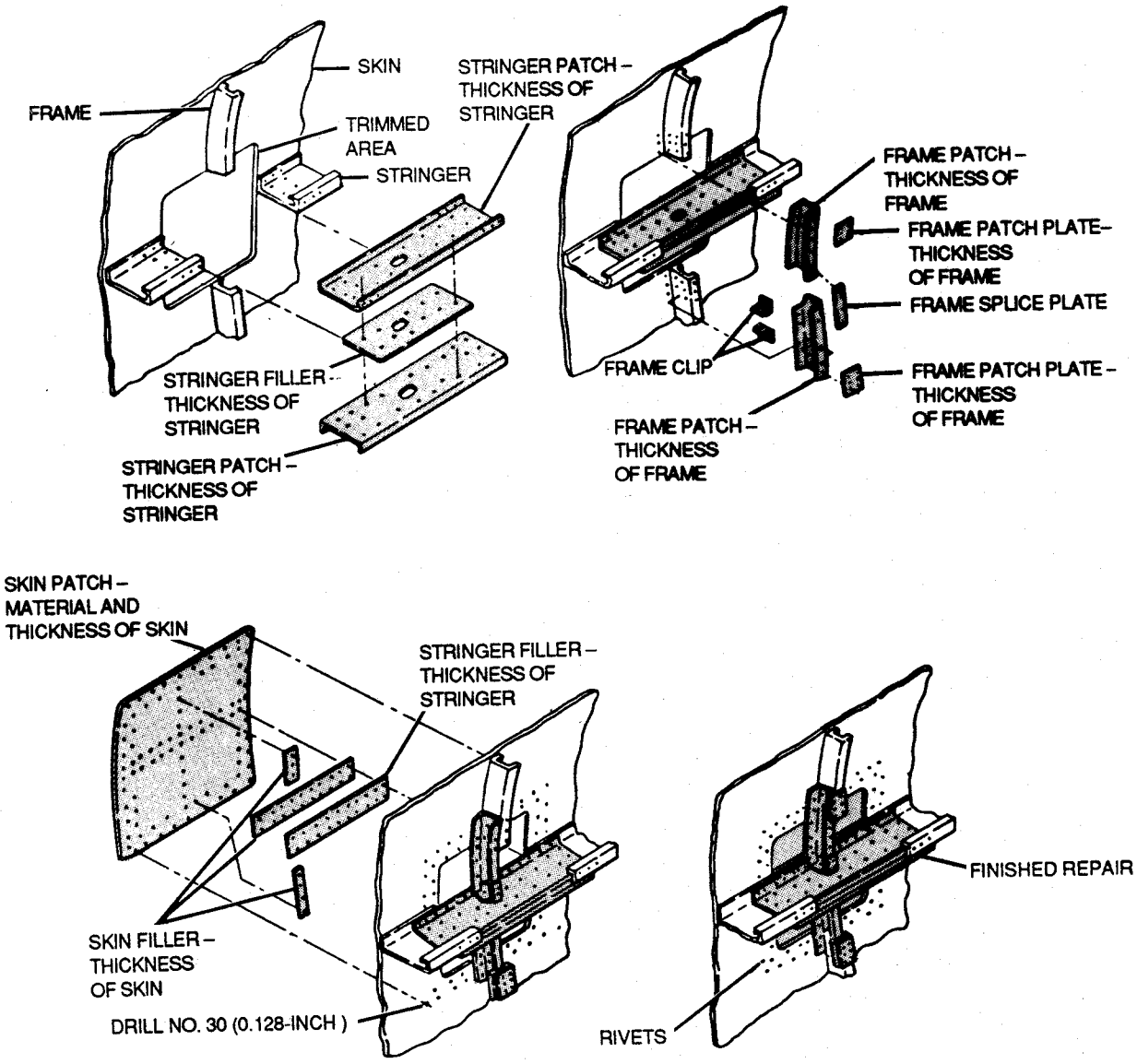

Figure 8-35. Repair of Frame and Stringer Joint

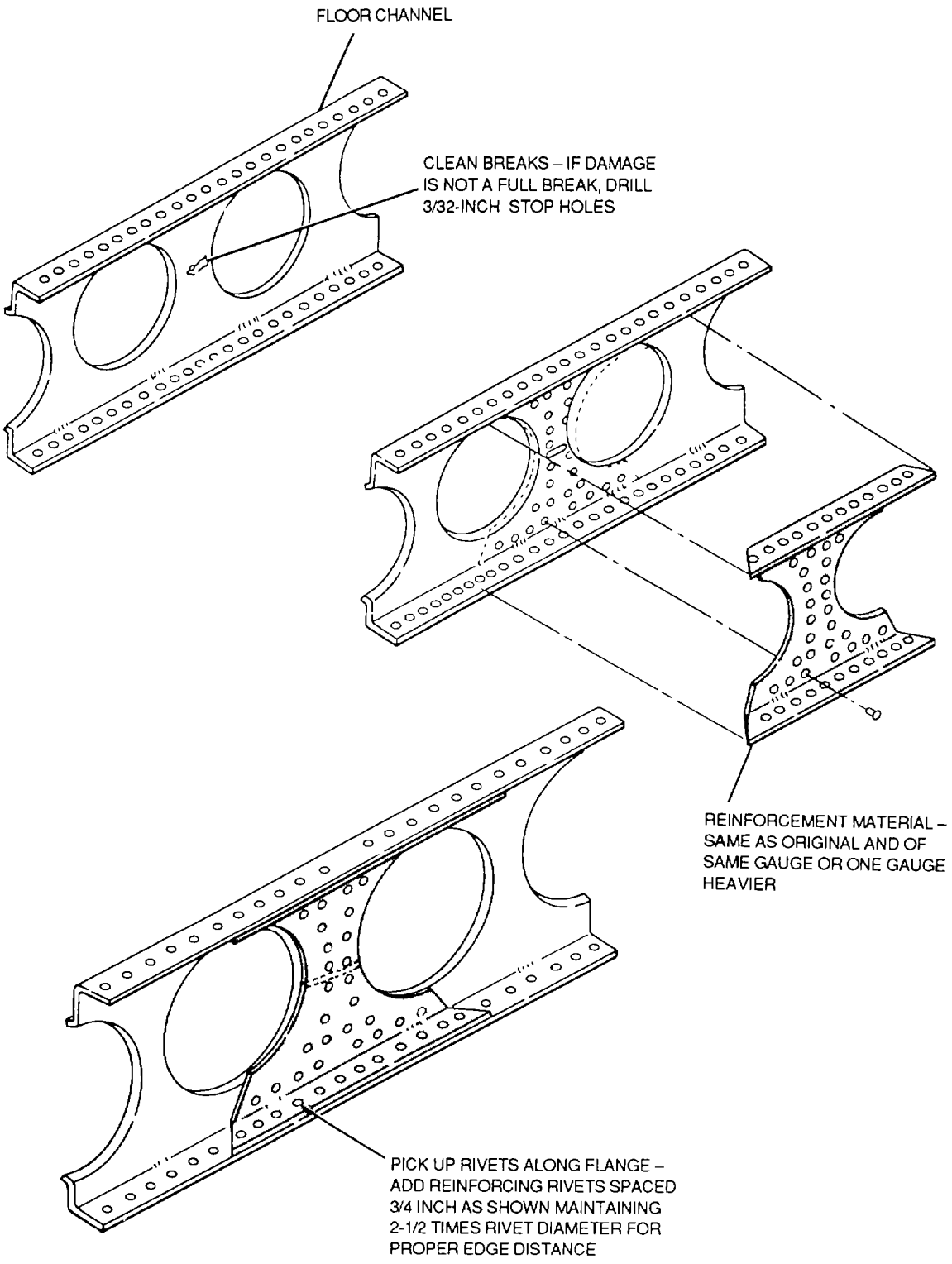

Figure 8-36. Floor Channel Repair

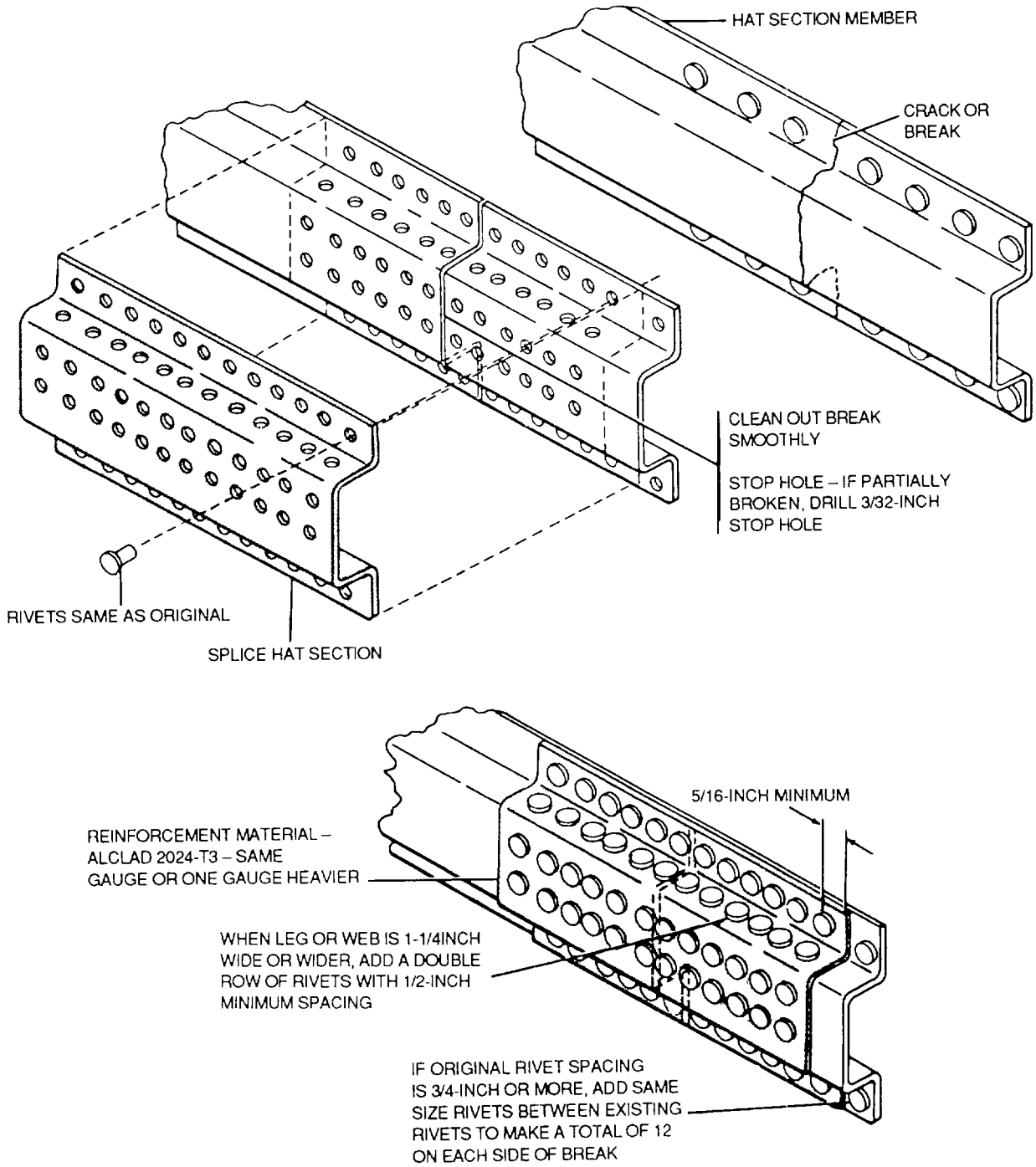

Figure 8-37. Splice Repair of Hat Section

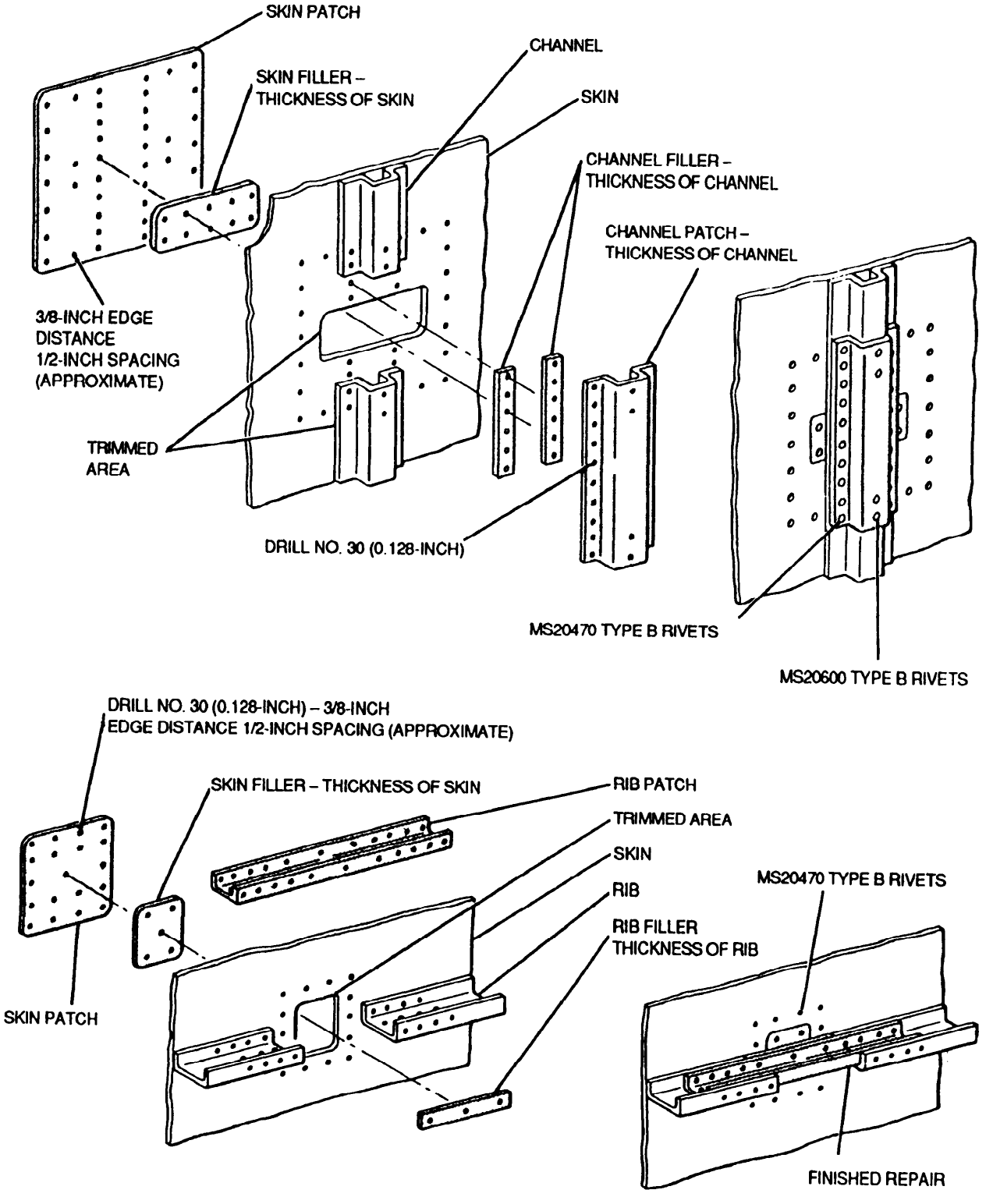

Figure 8-38. Nonstressed Skin and Frame Repair

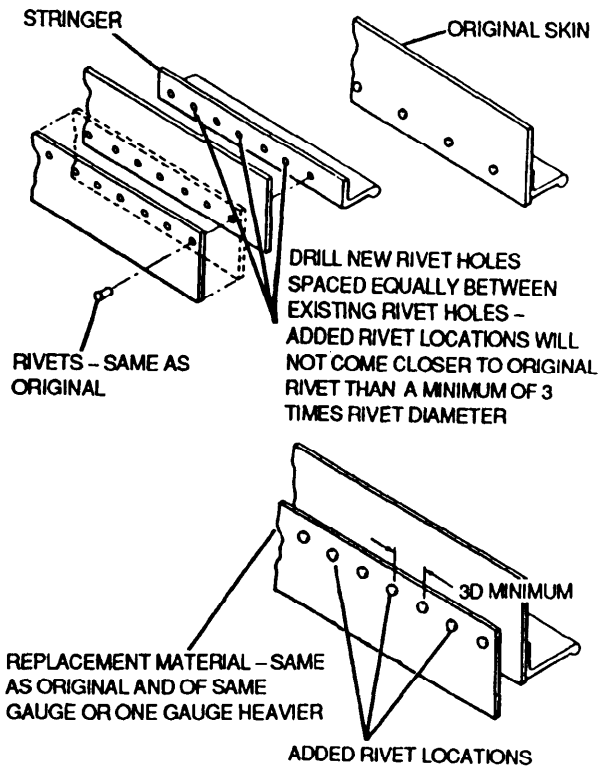

Figure 8-39. Longitudinal Skin Joint

d. Sealant Repair or Replacement. For instructions in the use of sealing compounds, refer to TM 1-1500-204-23-6. This paragraph discusses the procedures for the use of rubber seals, used mostly in emergency exits and entrance doors. Seals of this type should be replaced any time there is any degree of damage. Such a seal is not usually repairable because it must be continous around the opening. See figure 8-60.

(1) Seal removal. The seal can be removed as follows:

(a) Remove the seal retainers from the frame, as seen in figure 8-61.

(b) Pull off the old seal.

(c) Use aliphatic naphtha (TT-N-95) and clean ragsto clean the frame. This should be done immediately before cement application.

(d) Applicable aircraft maintenance manual, to the metal parts and the seal surfaces to be joined.

(e) Allow the rubber cement to dry until tacky, then join the seal to the metal, pressing it firmly along all contact points.

(f) Install the seal retainers and allow to cure for approximately 24 hours prior to use.

e. Sealing of Hardware. Rivets, bolts, or screws, do not always seal properly when used in these critical areas or sections, When pressure leaksoccur around the fasteners, they should be filled with sealing compound and new fasteners installed. Remove excess sealant as soon as possible to avoid the difficulty encountered after it becomes cured.

8-11. Tubing Repair. Tubing is used in engine mounts and in the aircraft structure. This tubing is subjected to heavy loads, both in flight and statically.

a. Engine Mount. The following information applies specifically to engine mount tubing.

(1) Repairable damage. Repairable damage to the engine mount tubing must be limited to damage occurring in localities which will retain sufficient intact portions after the injury has been trimmed away to contain the necessary length of welded splice. Refer to the applicable aircraft maintenance manual.

(2) Determining repairable damage. The following precautions should be considered when deciding if damage is repairable.

(a) Damaged splice. A repair which would curtail a portion of the splice and endanger the integrity of the structure shall not be attempted.

(b) Damage to welded joints. Injuries to welded joints are not repairable, and will require a total replacement of the engine mount unless a replacement of the damaged joint can be spliced into the intact frame with the best workmanship and careful location of the mounting holes.

b. Structural Tubing. Structural tubing is used today primarily as load-carrying trusses or supports, as shown in figure 8-62.

(1) Types of repair. Repair to structural tubing consists of smoothing shallow nicks, scratches, and dents; reinforcing cracked members and dented areas; splicing damaged members; replacing damaged members when splicing is impractical; and correcting minor distortion. All repairs are accomplished by welding with the exception of correcting minor distortion. Welding procedures are covered in TM 1-1500-204-23-8 and TM 9-237.

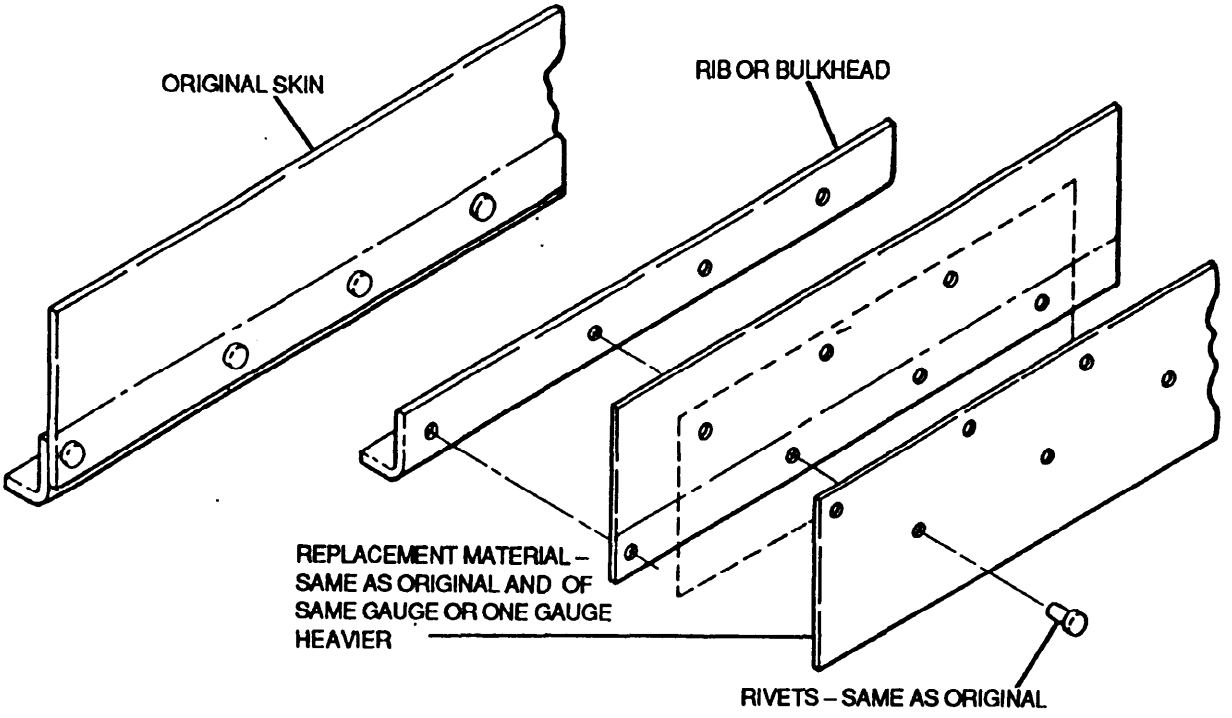

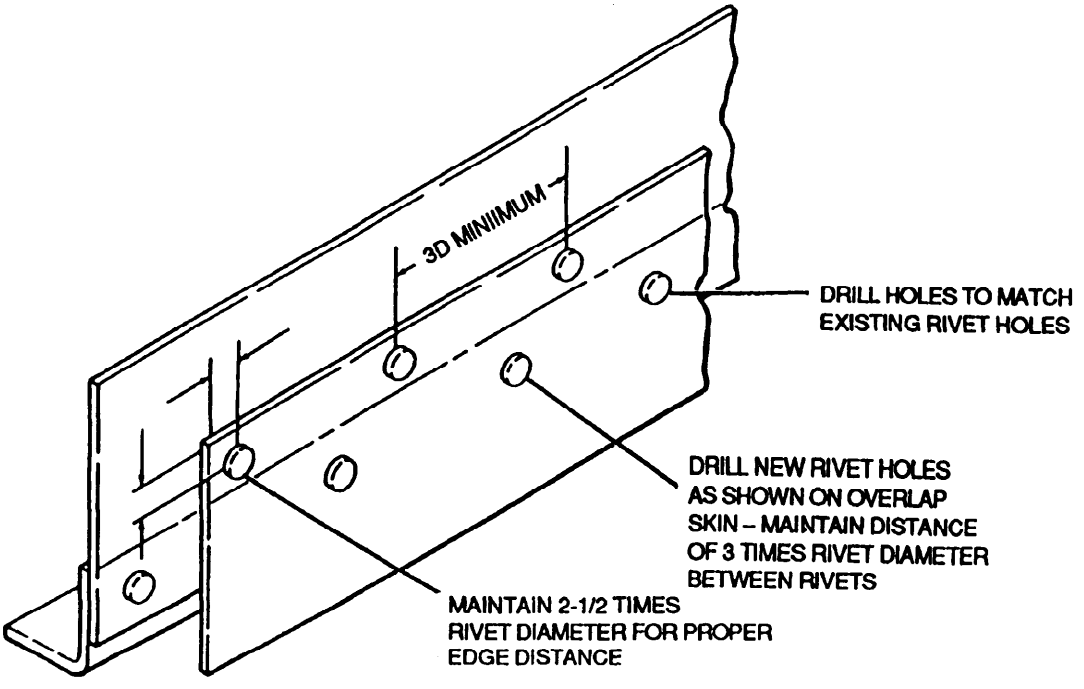

Figure 8-40. Transverse Skin Joint

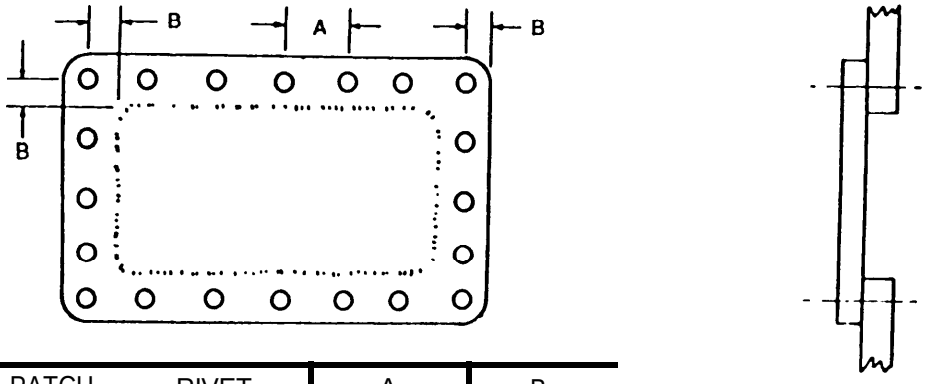

PATCH GAUGE	RIVET DIAMETER (INCHES)	A (INCHES)	B (INCHES)
0.020	3/32	1	3/16
0.025	1/8	1	1/4
0.032	1/8	1	1/4
0.040	1/8	1	1/4
0.051	1/8	1	1/4
0.064	3/16	1	3/8
0.072	3/16	1	3/8
0.081	3/16	1	3/8

LEGEND
A RIVET PITCH
B EDGE DISTANCE

Figure 8-41. Rivet Spacing for Repair with Single Row of Rivets

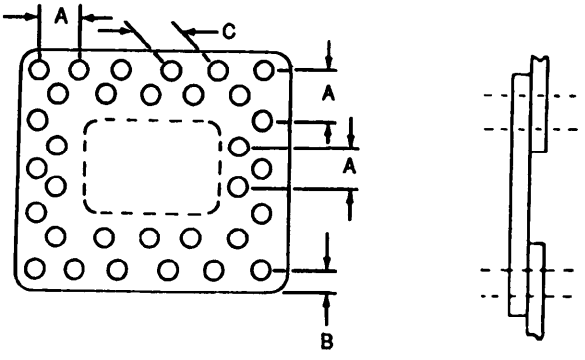

PATCH GAUGE	RIVET DIAMETER (INCHES)	A (INCHES)	B (INCHES)	C (INCHES)
0.020	3/32	1	3/16	3/8
0.025	1/8	1	1/4	1/2
0.032	1/8	1	1/4	1/2
0.040	1/8	1	1/4	1/2
0.051	1/8	1	1/4	1/2
0.064	3/16	1	3/8	3/4
0.072	3/16	1	3/8	3/4
0.081	3/16	1	3/8	3/4

LEGEND
A RIVET PITCH
B RIVET DISTANCE
C ROW DISTANCE

Figure 8-42. Rivet Spacing for Repair with Double Row of Rivets

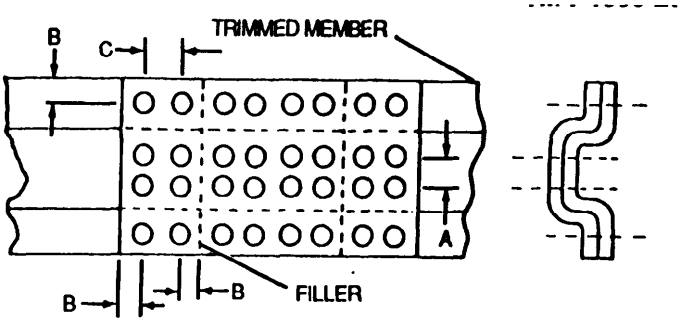

PATCH GAUGE	RIVET DIAMETER (INCHES)	A (INCHES)	B (INCHES)	C (INCHES)
0.020	3/32	3/8	3/16	3/8
0.025	3/32	3/8	3/16	3/8
0.032	1/8	1/2	1/4	1/2
0.040	5/32	3/4	5/16	3/4
0.051	5/32	3/4	5/16	3/4
0.064	3/16	3/4	3/8	3/4
0.072	3/16	3/4	3/8	3/4
0.081	3/16	3/4	3/8	3/4

LEGEND
A RIVET PITCH
B EDGE DISTANCE
C ROW DISTANCE

Figure 8-43. Rivet Spacing for Repair Using Formed Patch

(2) Material. Structural tubing or structural sheet stock used for repair of structural steel tubes is made of 1025, 4130, or 8630 steel. Tubing used for telescope reinforcements or for splicing must be of at least the same tensile strength and wall thickness as that of the original member.

(3) Negligible damage to steel tubing. Slight indentations, scratches, or minor bowing may be considered negligible.

(a) Dents. Disregard smooth dents not exceeding 1/20 of tube diameter and which are clear of the middle third of the tube length. The exception to this will be to satisfy appearance needs only. Do not disregard dents accompanied by cracks, fractures, and sharp corners.

(b) Nicks and scratches. Smooth out all sharp nicks and scratches with a fine file, emery cloth, or steel wool. This will relieve high concentrations of stress which may cause failure of the part when not dealt with.

(4) Smooth dents in steel tubing. Minor smooth dents in steel tubing may often be removed by the following procedures:

CAUTION

Heat-treated steel tubing used in critical stress area or tubing having dents requiring excessive application of heat will not be repaired by the following method, as war-page or a reduction in material strength might result.

(a) Remove one self-tapping screw provided at the extremities of main steel tubes and apply air pressure of 75 psi to the inside.

(b) Heat the dented area evenly to a dull red with an acetylene torch until the increased internal air pressure forces out the contour.

(c) When internal air pressure and heat are not sufficient to remove the dent, tack weld a welding rod to the center of the dent and pull on the rod while applying heat.

(d) After the dent is removed, allow the area to cool and then release internal air pressure.

(5) Steel tube circumference bent to an oval shape. When the circumference of a steel tube is bent to an oval shape, the area may be restored to

normal in the cold condition by pressure exerted on the area through grooved steel form blocks as shown in figure 863. To repair, proceed as follows:

(a) Drill steel block to diameter of damaged tube; saw block along axis of hole and separate sections of block.

(b) Apply form block sections to oval-shaped area on affected tube.

(c) Slip a heavy C clamp over blocks, tighten clamp, and exert pressure on area until oval-shaped tube area is restored to normal circular shape.

(d) Remove C clamp and blocks.

(6) Bowed steel tube. Steel tubes which have been bowed without evidence of cracking may be straightened in the cold condition as follows (see figure 8-64):

(a) Cut three hardwood blocks grooved to fit contour of tube and line grooves with leather or canvas.

(b) Obtain a length of channel iron equal to length of bow in tube.

(c) Locate one of the grooved blocks at height extremity of bow and apply channel iron beam so that beam spans bowed area and backs up two blocks.

Table 8-1. Minimum Rivet Edge Distances

Rivet Diameter in 32nds	Nonflush type rivets				Flush type rivets			
Sheet thickness	3	4	5	6	3	4	5	6
0.020	0.156	0.218	0.265	-	0.18 7	0.281	0.328	-
0.025	0.156	0.218	0.265	0.328	0.187	0.281	0.328	0.390
0.032	0.140	0.218	0.265	0.328	0.171	0.281	0.328	0.390
0.040	0.125	0.187	0.234	0.328	0.156	0.250	0.328	0.390
0.051	0.109	0.156	0.203	0.312	0.140	0.218	0.296	0.375
0.064	-	0.140	0.187	0.265	-	0.203	0.265	0.328
0.072	-	0.140	0.171	0.250	-	0.203	0.250	0.312
0.081	-	0.125	-	0.234	-	-	0.234	0.296
0.102	—	—	-	0.203	-	—	—	0.265

Table 8-2. Rivet Selection and Spacing When Repairing Aluminum Alloy Parts

Gauge of thickest piece	Type of repair rivet		Pitch		Row distance
	Standard	Blind	Minimum	Maximum	
0.020	3[1]	4[2]	0.375	0.500	0.437
0.025	4[1]	5[2]	0.500	0.625	0.500
0.032	4[1]	5[2]	0.562	0.687	0.500
0.040	5[1]	6[2]	0.687	0.812	0.625
0.051	5[1]	6[2]	0.687	0.750	0.562
0.064	6[3]	6[2]	0.812	1.062	0.625
0.072	6[3]	6[2]	0.750	1 062	0.687
0.081	6[3]	6[2]	0.625	0.937	0.687
0.091	6[3]	6[2]	0.625	0.750	0.687
0.102	10	6[2]	1.562	1.812	0.875
0.250	10		1.187	1.375	0.875

[1]MS20470AD or MS20426AD
[2]MS20600AD or MS20601AD
[3]MS20470DD or MS20426DD, AN Hex head bolt, or steel lockbolt

(d) Apply third block on opposite side of tube at the point of maximum bend near center of bow.

(e) Slip one end of a heavy duty C clamp over channel iron beam and tighten clamp down on block at center of bend

(f) To allow for springback action of tube, continue tightening clamp until tube is slightly bent in opposite direction.

(g) Remove C clamp, blocks, and channel iron.

(h) Examine alignment of tube by placing straightedge on both the side and the top of the tube Repeat process of straightening if straightedge check reveals slight bow in tube.

(i) Carefully test all adjacent welded joints for cracks and repair if necessary

Table 8-3. Rivet Selection and Spacing When Repairing Corrosion-Resistant Steel Parts

Gauge of thickest piece	Type of repair rivet		Pitch		Row distance
	Standard	Blind	Minimum	Maximum	
0.024	4[1]	5[2]	0.562	0.687	0.437
0.030	4[1]	5[2]	0.437	0.562	0.500
0.036	5[1]	6[2]	0.750	0.875	0.625
0.042	5[1]	6[2]	0.687	0.812	0.625
0.042	6[1]	6[2]	0.875	1.00	0.687
0.060	6[1]	6[2]	0. 812	1.062	0.687

[1]MS20615M or MS20427M

Table 8-4. Rivet Selection and Spacing When Repairing Magnesium Alloy Parts

Gauge of thickest piece	Type of repair rivet		Pitch		Row distance
	Standard	Blind	Minimum	Maximum	
0.020	3[1]	4[2]	0.375	0.500	0.437
0.025	4[1]	5[2]	0.500	0.625	0.500
0.032	4[1]	5[2]	0.625	0.687	0.500

[1]MS20470B or MS20426B
[2]MS206008 or MS20601B

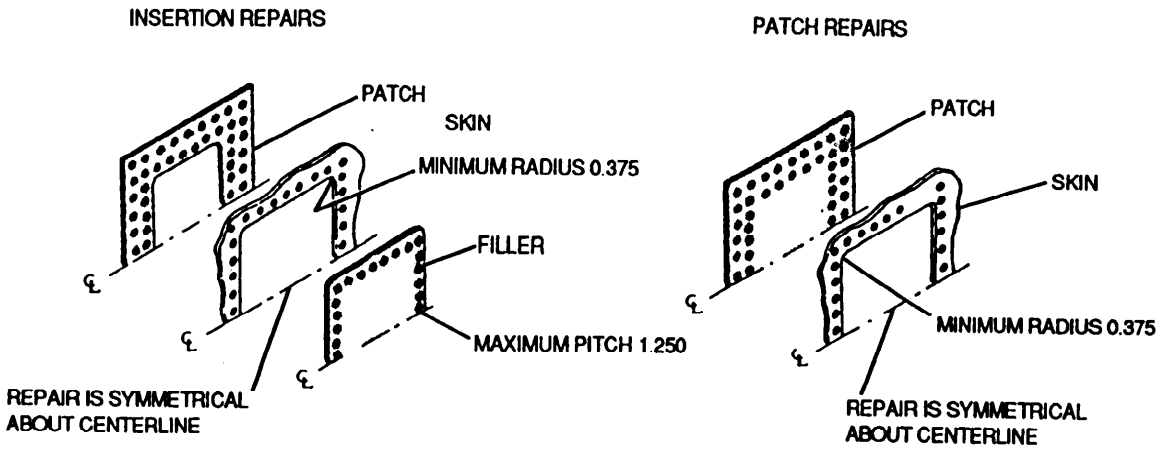

Figure 8-44. Rectangular Damage Cutout Repair (Lightly Stressed)

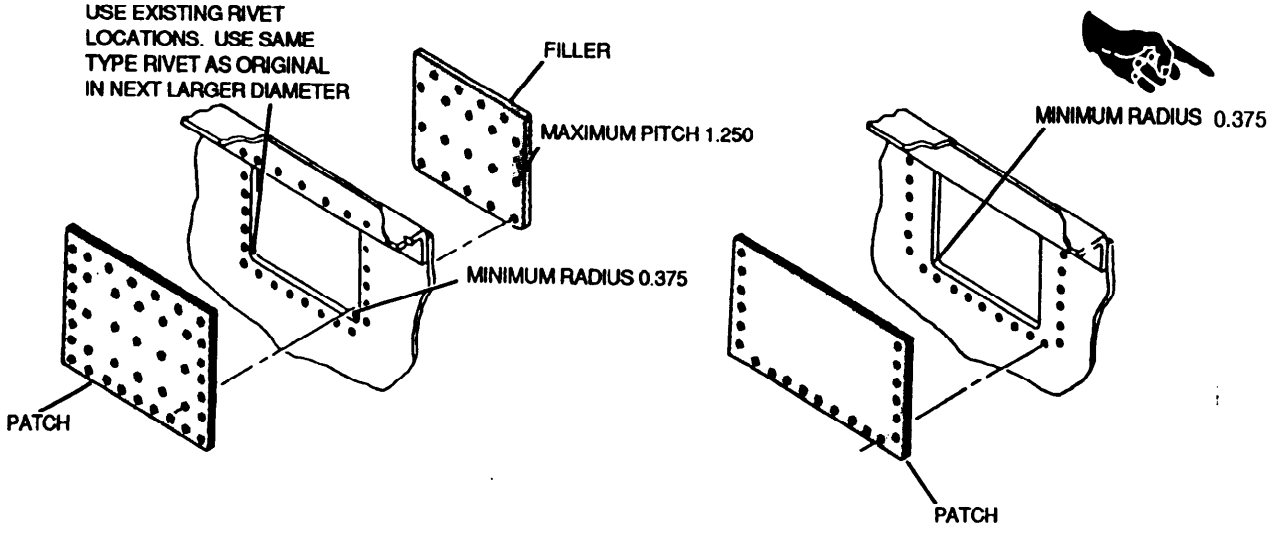

Figure 8-45. Repair of Damage Near Existing Structure (Lightly Stressed)

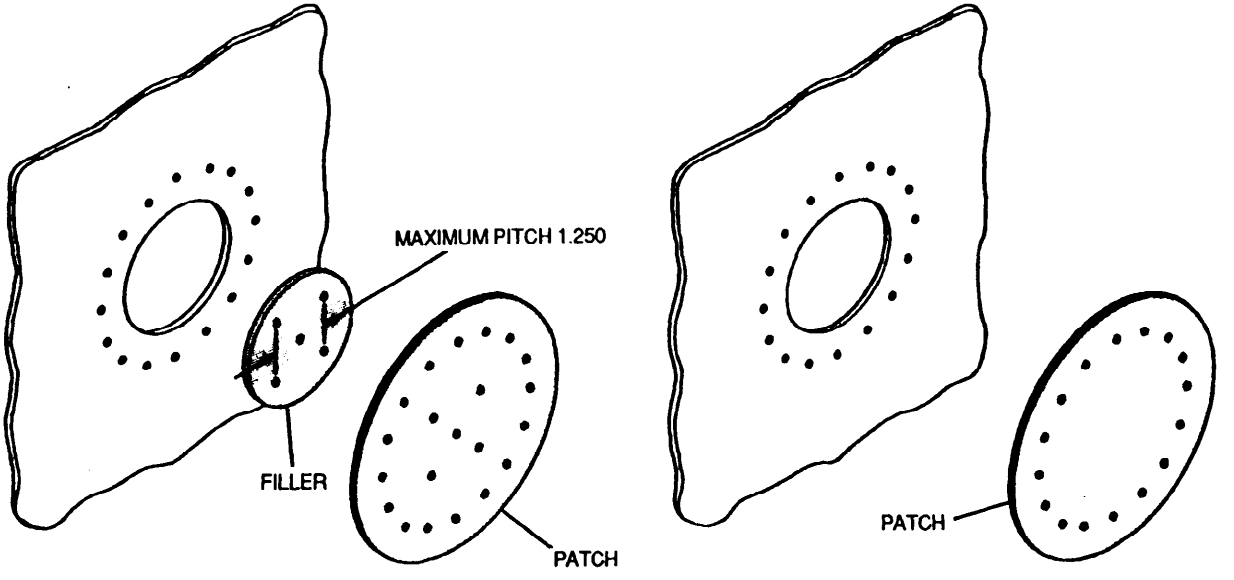

Figure 8-46. Circular Damage Repair for Lightly Stressed Areas.

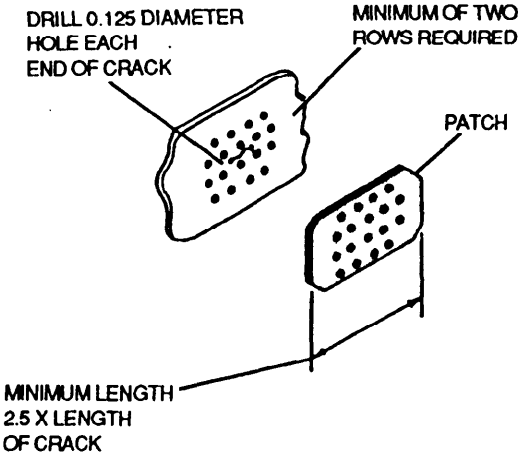

Figure 6-47. Crack Repair for Lightly Stressed Areas

(7) Small cracks at steel tubing cluster joints. To check an individual tubing for cracks, perform a dye penetrant or magnetic particle inspection in accordance with TM 1-1500-204-23-7 and TM 55-1500-335-23. When a crack is detected, repair as follows:

(a) Remove all finish from the area by rubbing with steel wool or a wire brush.

WARNING

Drycleaning solventis flammable and solvent vapors are toxic. Use P-D-680, Type II Solventin a well-ventilated area. Keep away from open flames. Avoid prolonged solvent contact with skin.

(b) Before welding, remove drive screw from sealed tubing section, drain internal corrosion preventive compound, and clean interior of tubes thoroughly in the area to be welded with drycleaning solvent, Federal Specification P-D-680 Type II. After the area is clean, use dry, compressed air to make the area safe for welding.

(c) If crack is located in original weld bead, carefully chip, file, or grind out existing weld bead and reweld over crack along original weld line.

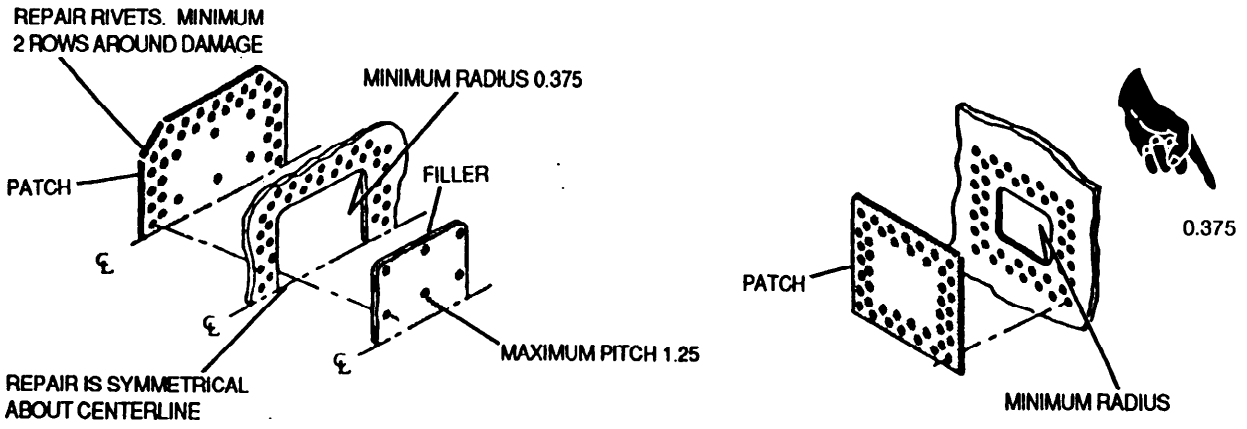

Figure 8-48. Rectangular Damage Repair for Heavily Stressed Areas

NOTE

When grinding off original weld bead, take particular care to avoid removing any of the existing tube of gusset material.

(d) When crack is near a duster joint but away from original weld bead, remove finish from area, drill a number 40 (0.098-inch) hole at each end of crack, and weld an overlapping doubler over area.

(e) Apply one coat of epoxy primer ML-P-23377 to area. Apply finish coats to match adjacent surfaces.

(8) Sharp dents at a steel tube cluster joint. Sharp dents may be repaired by welding a formed steel patch plate over the dented area and surrounding tubes. To repair, see figure 8-65 and proceed as follows:

(a) Cut a section of steel plate of a thickness equal to or greater than that of damaged tube.

(b) Trim plate so that plate extends a minimum of two times diameter of tube from nearest edge of dent and over adjacent tubes 1-1/2 times diameter of tube.

(c) Rub off all existing finish from cluster joint area to be patched.

(d) Form reinforcing plate before any welding is attempted, or cut and tackweld plate to one or more of tubes forming cluster joint, then heat and pound joint contour as required to produce a smooth contour.

(e) Avoid unnecessary heating of reinforcing plate while forming, but apply sufficient heat and pound plate so there is generally a gap of no more than 1/16 inch form contour of joint to reinforcing plate.

(f) Exercise care to prevent damage at apex of angle formed by any two adjacent fingers of plate.

(g) After reinforcing plate is formed and tackwelded to cluster joint, weld plate edges tocluster joint.

(h) Refinish area

(9) Sharp dents or cracks in length of steel tubes. When a crack or sharp dent appears in a length of steel tubing, see figure 8-66 and repair as follows:

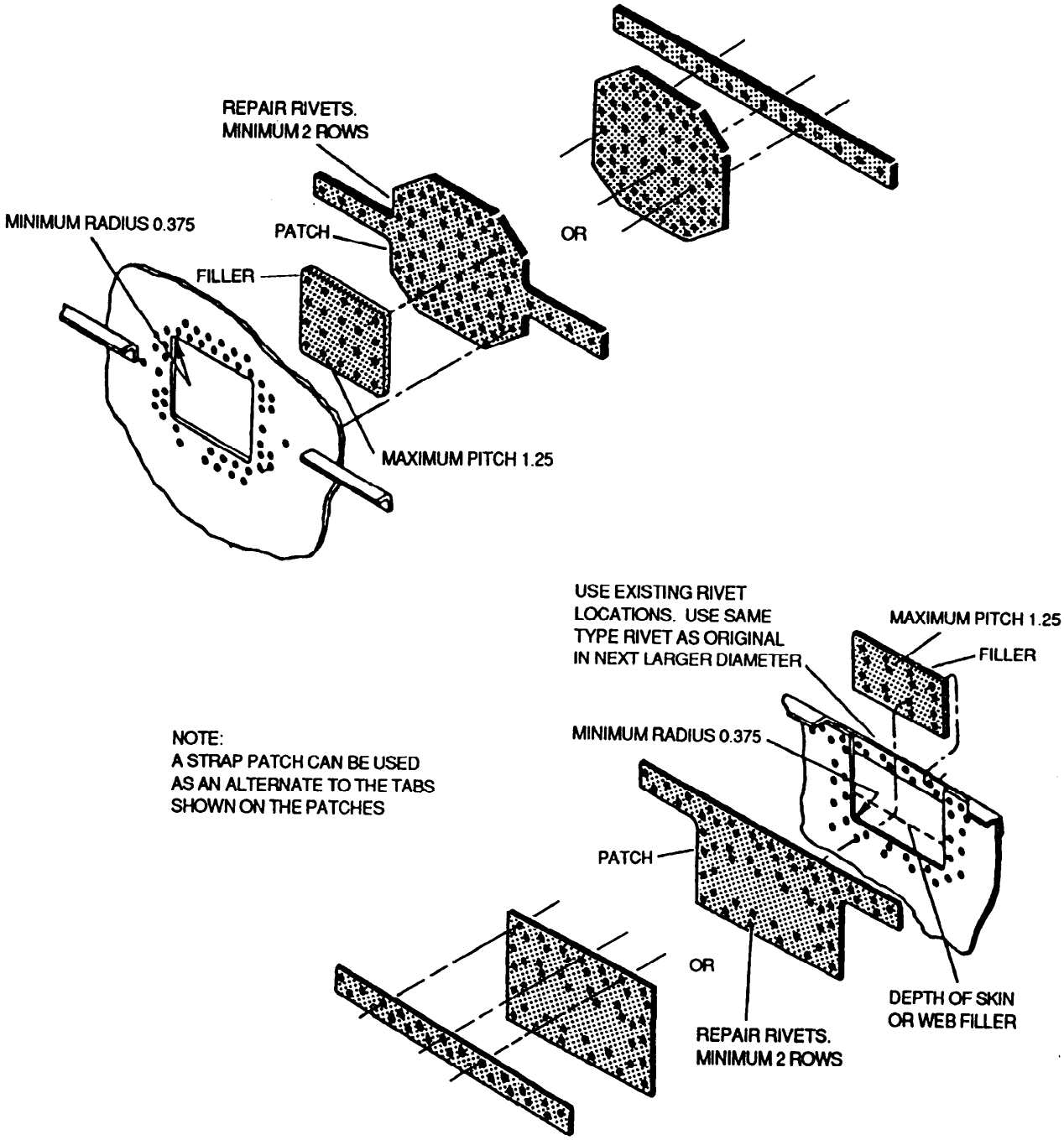

Figure 8-49. Damage Repair Near Existing Structure in Heavily Stressed Areas

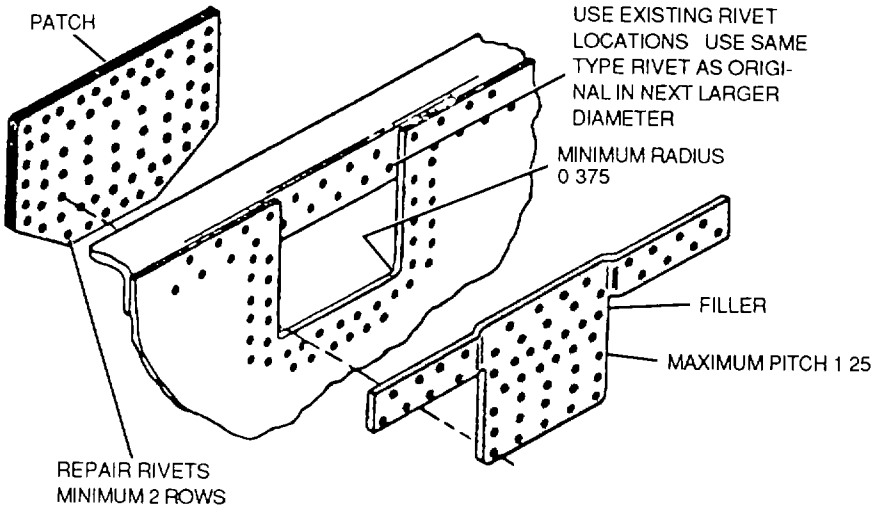

Figure 8-50. Damage Repair Near Primary Horizontal Member in Heavily Stressed Area

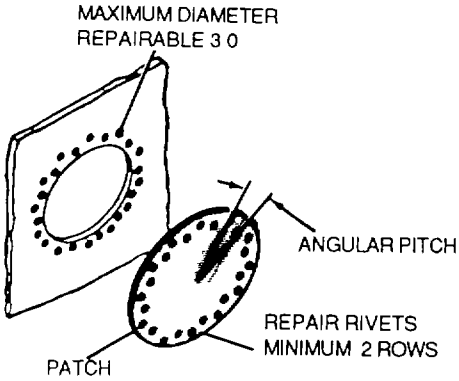

DESGINATION	HOLE DIAMETER 1.0	2.0	3.0
OF CIRCULAR REINFORCEMENT	2.50	5.0	7.50
DIAMETER OF OUTER RIVET CIRCLE	1.750	4.0	6.50
DIAMETER OF INNER RIVET CIRCLE	---	3.0	4.0
ANGULAR RIVET PITCH	45 DEGREES	22 DEGREES 30 MINUTES	15 DEGREES
NUMBER OF RIVETS REQUIRED (MINIMUM)	8	16	

Figure 8-51. Circular Damage Repair in Heavily Stressed Area

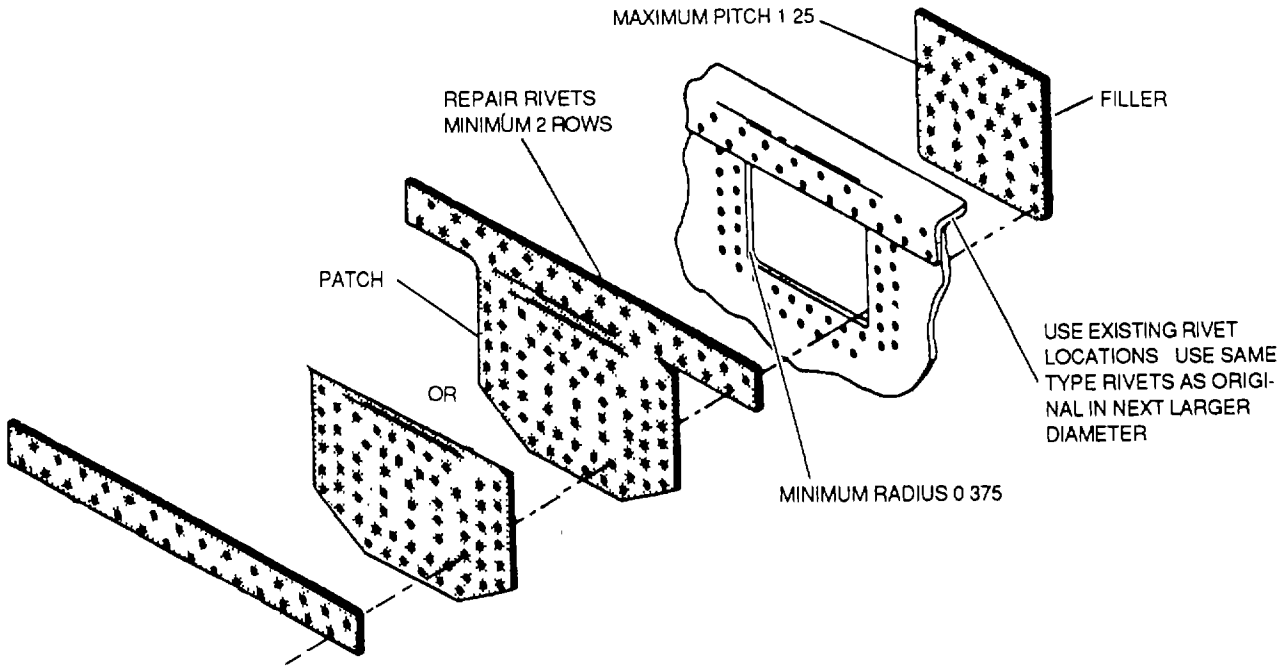

Figure 8-52. Damage Repair Near Adjacent Member in Heavily Stressed Area

(a) Drill number 40 (0.098-inch) holes at ends of crack.

(b) Remove finish around tube for a distance of approximately 3 inches on each side of damage.

(c) Select a length of steel tube sleeve having inside diameter approximately equal to outside diameter of damaged tube and with same wall thickness..

(d) Diagonally cut sleeve reinforcement at 30 degree angle on both ends so that distance of sleeve from edge of crack or dent is not less than 1 1/4 times diameter of damaged tube.

(e) Cut through entire length of sleeve and separate half sections.

(f) Clamp two sections to proper positions on the affected area.

(g) Weld reinforcing sleeve along length of two sides and on both ends.

(h) Refinish area..

(10) Splicing of structural tubing. There are two types of splice welds permitted: diagonal and fish-mouth. The nature of damage will determine which type should be used. Observe the following practices:

- Do not make a splice in the middle third of a tube section
- Insert only one partial replacement tube in any one section of a structural member.
- When a member is damaged at a joint so that it is impossible to retain a stub to which another member can be attached, replace tube when it is a web member. When tube is a continuous longeron, locate splice in adjacent section.
- Use wood braces with notches in ends to hold tubes in position to prevent misalignment during welding.
- Maintain alignment by measuring distance between points of corresponding member on undamaged aircraft..
- Rosette welds are used as additional welds to fuse an inner tube and an outer tube when the difference between the outside diameter of the inner and the inside diameter of the outer tube exceeds 1/64 inch

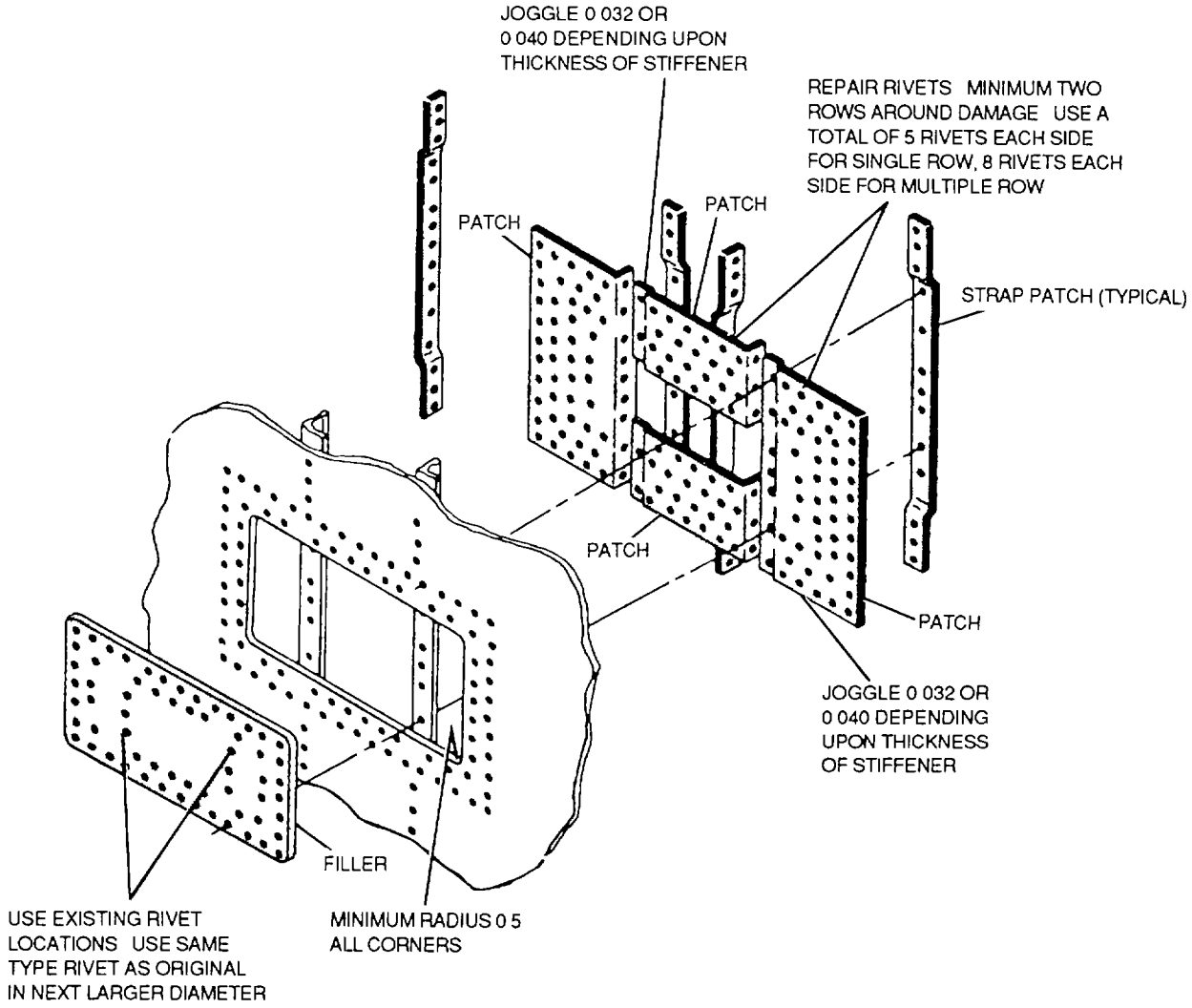

Figure 8-53. Insertion Skin Repair Across Stiffeners in Heavily Stressed Area

Table 8-5. Patch Material Selection

Original thickness	Patch material thickness
2024-T3-T4, and 7075-T6 Repair with 20245-T3 Clad or 7075-T6 Clad	
0.012	0.016
0.016	0.020
0.032	0.040
0.040	0.050
0.050	0.063
0.063	0.071
0.071	0.080
0.080	0.090
0.090	0.100
0.100	0.125
0.125	0.160
7075-T6 Repair with 2024-T3 Clad	
0.012	0020
0.016	0.025
0.032	0.050
0.040	0.063
0.050	0.071
0.063	0.080
0.071	0.090
0.080	0.100
0.090	0.125
0.100	0.160
0.125	0.160
Corrosion-Resistant Steel 301 and 302 Replace with Same Material	
0012	0016
0.016	0.020
0.020	0.025
0.025	0.032
0.032	0.036
0.036	0.040
0.040	0.050

When rosette welds are required, drill holes only in the outside tube such that the diameter of the hole is 1/4 of the outside diameter of the outer tube. The number of rosette welds on each side of the splice weld will be determined by the clearance between the liner and the tube. Three rosette welds will be used on each side of the splice for 1/16 inch clearance, two for 3/64 inch, one for 1/32 inch, and none for 1/64 inch and tighter fits. The rosette welds should be staggered around the tube so as not to be in the same plane as the last weld made in the welding sequence..

(11) Inner sleeve splicing method. The inner sleeve splice is recommended where a smooth tube surface is desired. To repair, see figure 8-67 and proceed as follows:

(a) Diagonally cut out damaged portion of tube with a hacksaw, locating cuts away from middle third of affected tube section..

(b) By filing, remove burrs from edges of cut..

(c) Diagonally cut replacement steel tube to match diameter, wall thickness, and length of removed portion of damaged tube.

(d) Allow 1/8-inch gap at each end of replacement tube to stubs of original tube..

(e) Select a length of steel tubing of same wall thickness and with outside diameter approximately equal to inside diameter of damaged tube..

NOTE

The inner sleeve material should fit snugly within original tube, with a maximum tolerance of 1/64 inch.

(f) Cut two sections of this tubing, each of such length that ends of inner sleeve will be a minimum distance of 1-1/4 tube diameters from nearest end of diagonal cut, as shown in figure 8-68..

(g) Scribe a mark on outside of diagonally cut original tube stub midway along diagonal cut..

(h) Measure a minimum distance of 2-1/4 times tube diameter, from nearest end of diagonal cut, center punch tube, and start drilling a number 40 (0.098-inch) hole at a 90-degree angle. After a shallow hole is started from which drill will not jump out, slant drill toward cut and drill at a 30-degree angle. Remove burrs from hole.

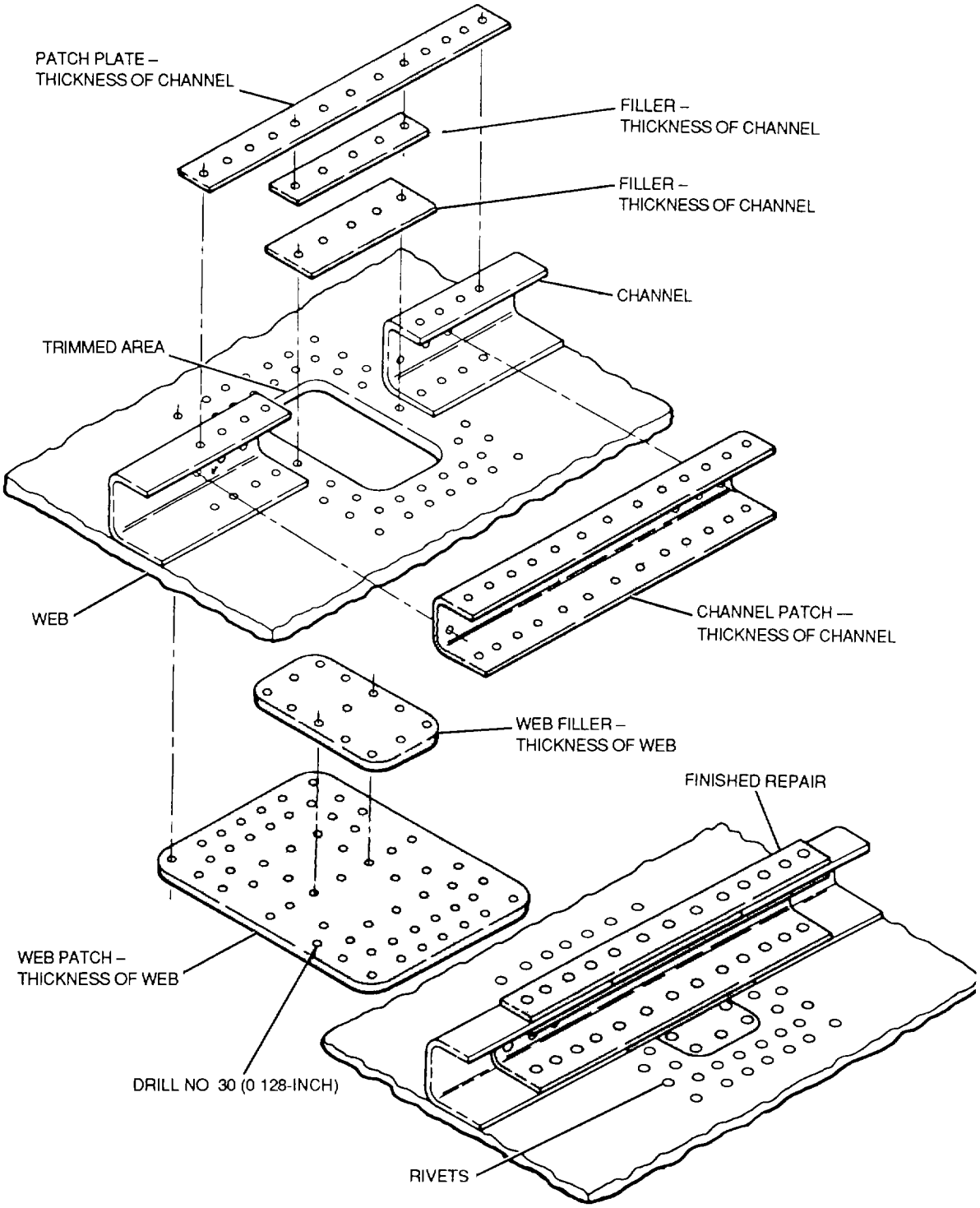

Figure 8-54. Repair for Heavily Stressed Support and Stiffener

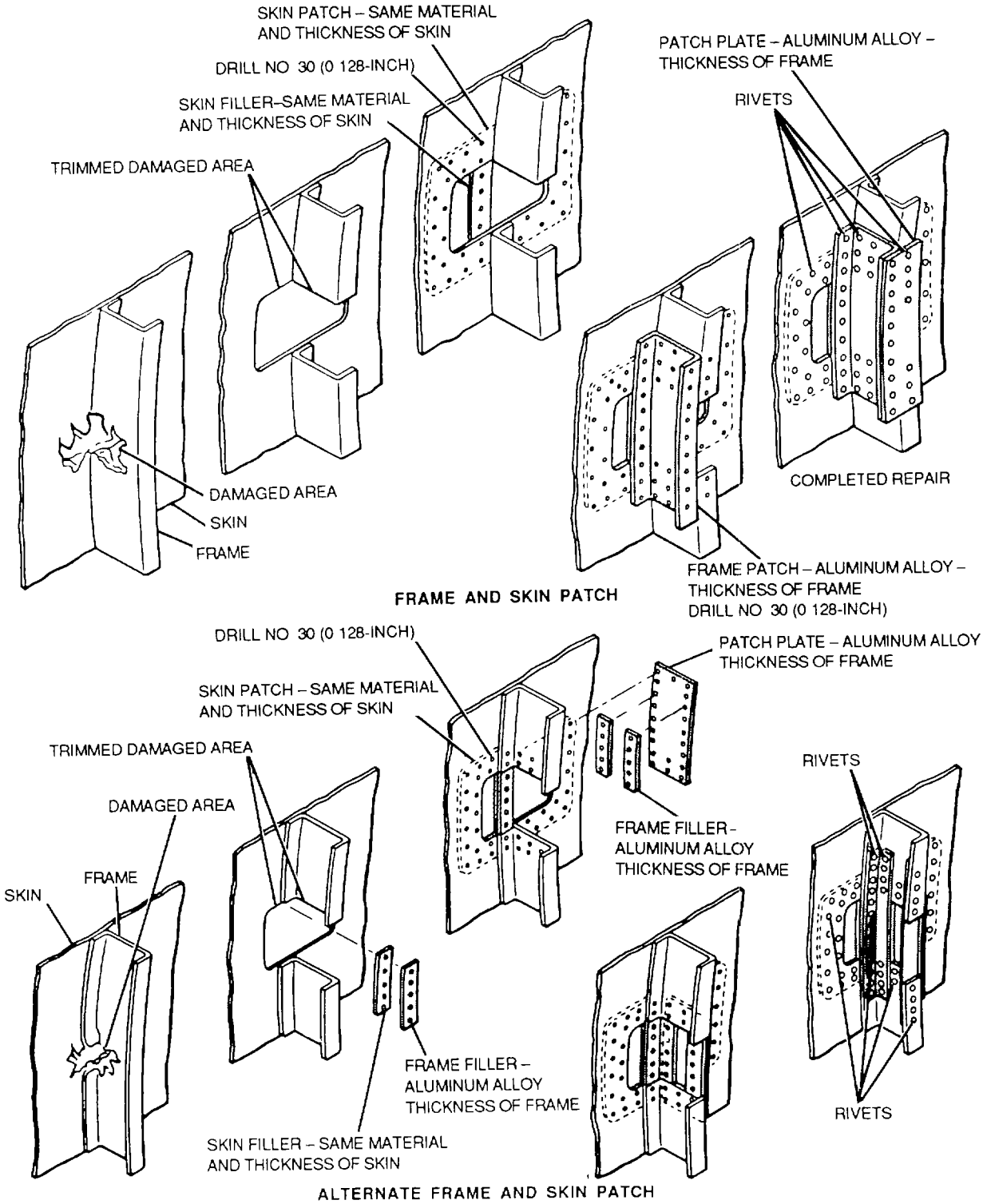

Figure 8-55. Stressed Skin Repair

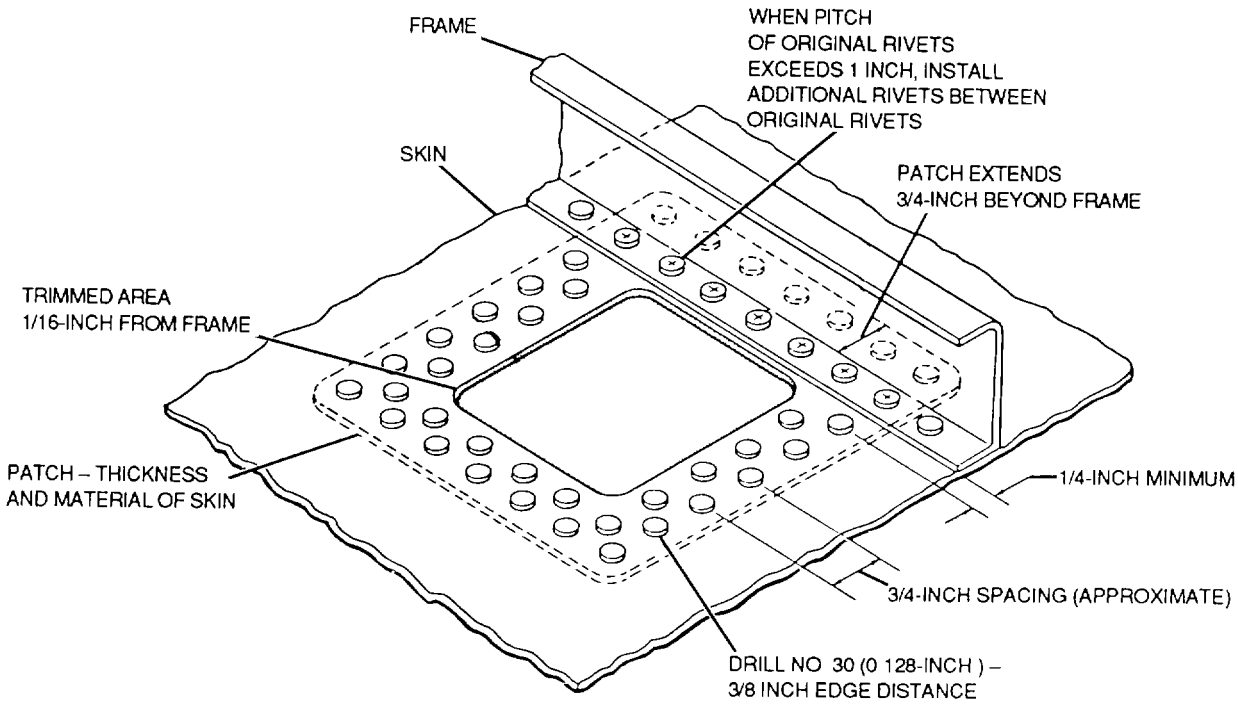

Figure 8-56. Repair for Damaged Skin Close to a Frame

(i) Insert one end of a length of 1/16-inch welding or brazing rod into hole and push wire out end of tube

(j) Weld end of wire to inner side of reinforcing sleeve

(k) Make a narrow mark around center of sleeve

(l) Slip sleeve into replacement tube so that welded wire is 180-degrees from drilled hole

(m) Align original tube stubs with replacement tube Pull on exposed end of sleeve-pulling wire until center mark on sleeve is directly in line with center mark on diagonal cut

(n) On each side of replacement tube, weld inner sleeve to stubs through the 1/8-inch gap between stubs

(o) Completely fill 1/8-inch gap and form a weld bead over gap

(p) Snip off pulling wire flush with surface of tube and weld over hole

(q) After welding, flush the interior walls oft the tubing with linseed oil heated to 165°F (74°C) Fill tubing through the small holes provided at the extremities of the tube, or, if holes are not present, drill suitable filler holes. Wipe excess linseed oil from outer circumference of tube. Seal filler holes with self tapping screws dipped in primer MIL-P-23377

(r) Refinish surface

(12) Outer sleeve splicing method. An outer sleeve splice may be used as an alternate to the inner sleeve splice. To repair, see figure 8-69 and proceed as follows

(a) Cut out damaged section of tube squarely, locating cut away from middle third of tube section

(b) Cut a replacement steel tube section to match outside diameter, wall thickness, and length of removed tube

NOTE

Replacement tube must bear against stubs of original tube with a tolerance not to exceed 1/32 inch.

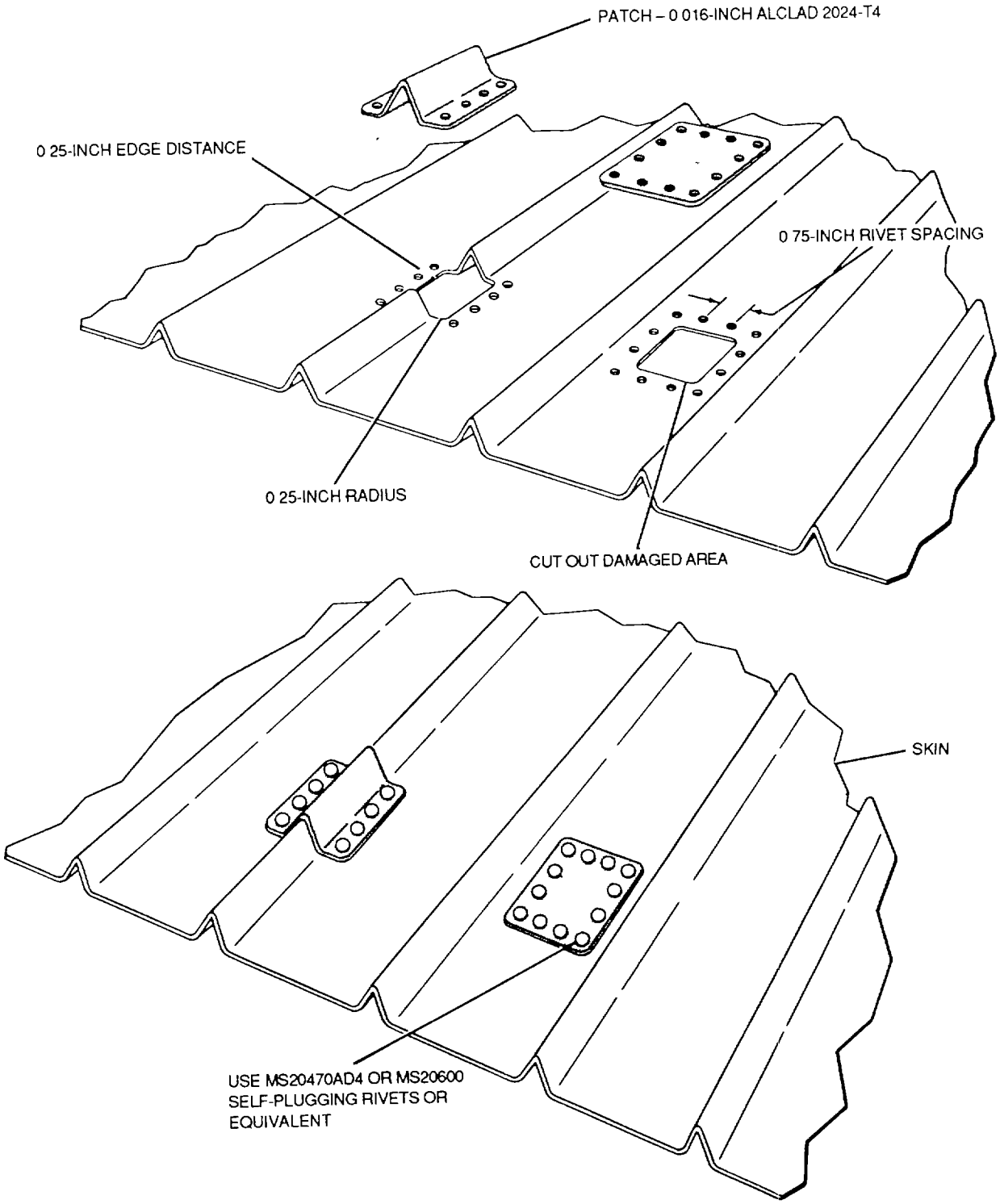

Figure 8-57. Patch Repairs to Beaded Skin

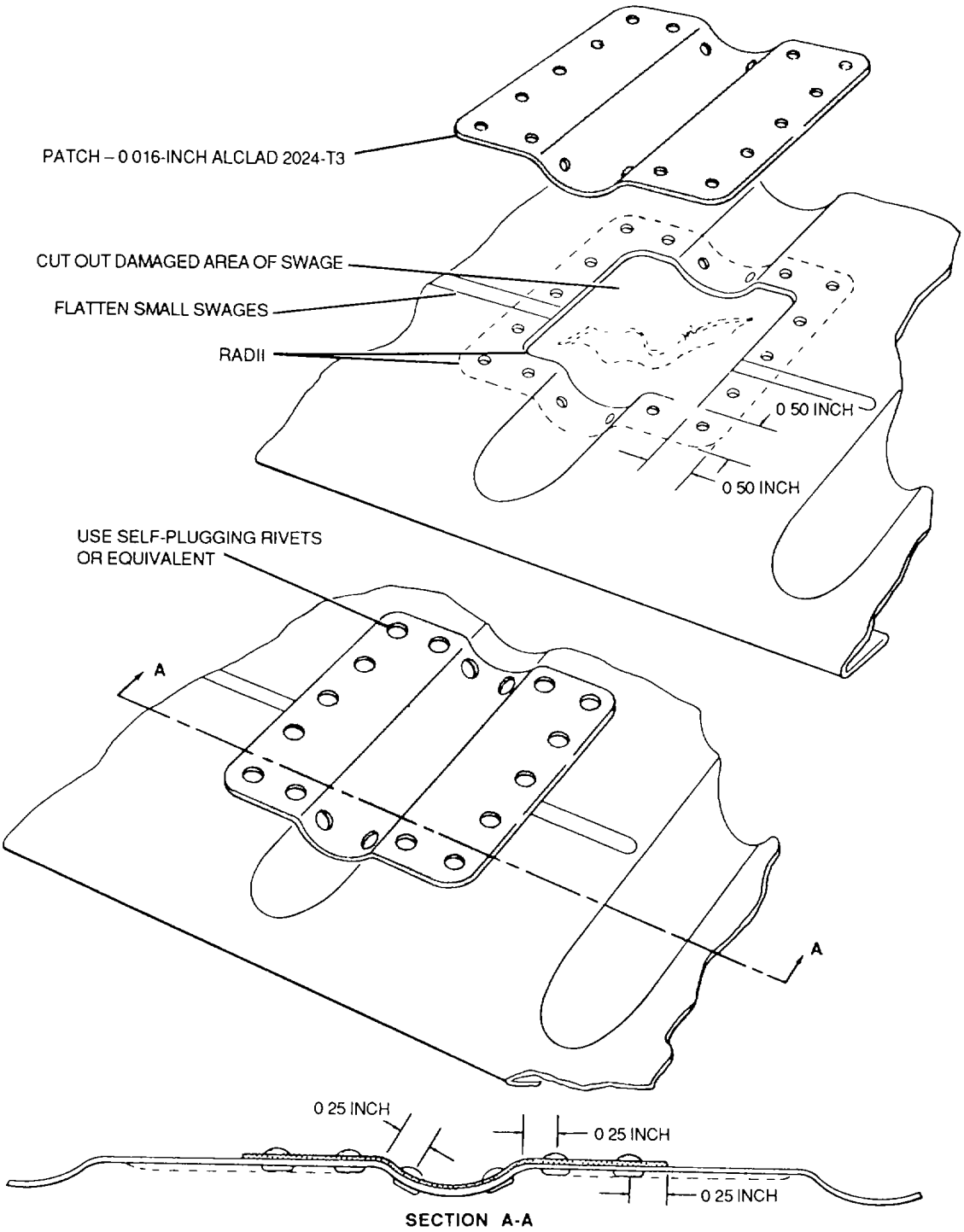

Figure 8-58. Patch Repair to Damaged Swage in Aileron and Flap Skin

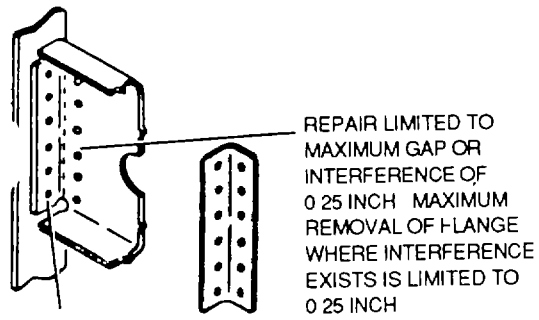

REMOVE AFFECTED FLANGE, DEBURR, AND APPLY EPOXY PRIMER MIL-P-23377

REPAIR FOR ELIMINATION OF GAPS BETWEEN FLANGE AND EXISTING STRUCTURE

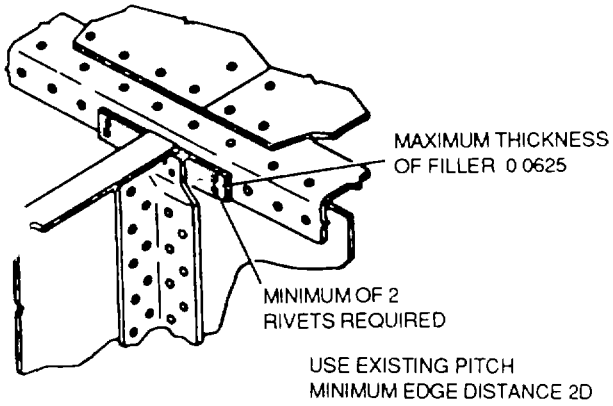

REPAIR FOR ELIMINATION OF GAP BETWEEN ANGLE AND JOGGLED STIFFENER (TYPICAL)

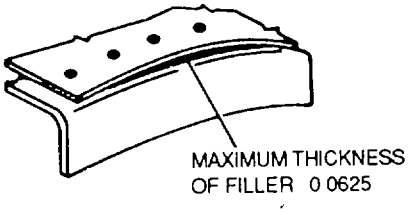

REPAIR FOR UNLEVEL CONDITION BETWEEN ANGLE AND WEB (TYPICAL)

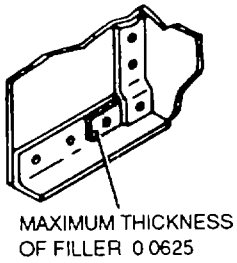

REPAIR FOR ELIMINATION OF GAP BETWEEN ANGLE AND JOGGLED STIFFENER (TYPICAL)

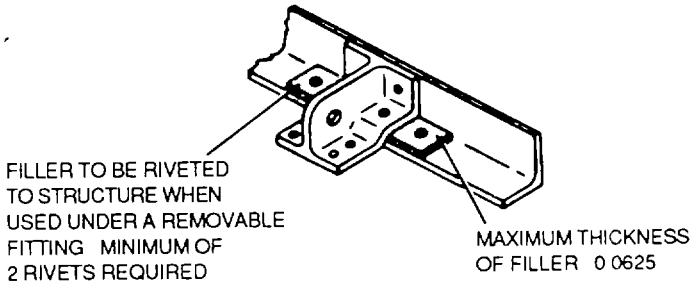

REPAIR FOR ELIMINATION OF GAP UNDER SECONDARY FITTING (TYPICAL)

Figure 8-59. Eliminating Gaps and Leveling Installations

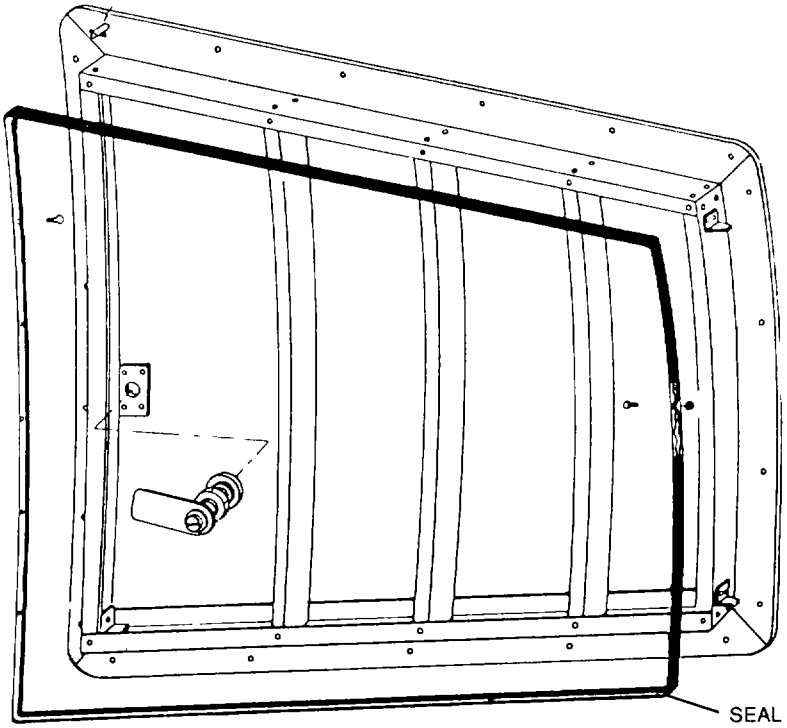

Figure 8-60. Typical Hatch Seal

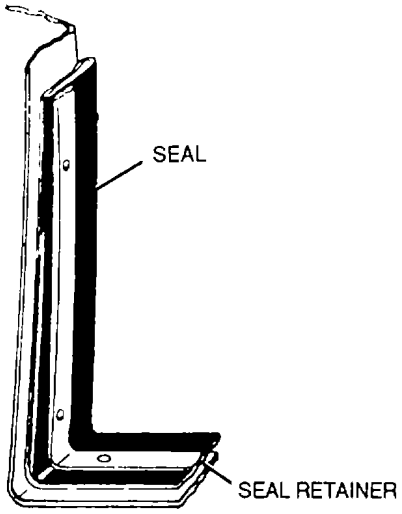

Figure 8-61. Seal Retainer

(c) Select a length of steel tubing with an inside diameter approximately equal to or slightly greater than outside diameter of damaged tube and with same wall thickness. This outer sleeve should fit snugly about original tube with a maximum tolerance of 1/64 inch

(d) Cut two sections of tubing diagonally or fishmouth, each of such length that nearest ends of outer sleeve are a minimum distance of 1-1/4 tube diameters from ends of cut on original tube

NOTE
Use a fishmouth cut sleeve where possible

(e) Remove burrs from all edge of sleeves, replacement tube, line up replacement tube, line up replacement tube with original tube stubs, and slip sleeves over center of each joint

(f) Slip two sleeves over replacement tube, line up replacement tube with original tube stubs, and slip sleeves over center of each joint

(g) Adjust sleeves to suit area and to provide maximum reinforcement

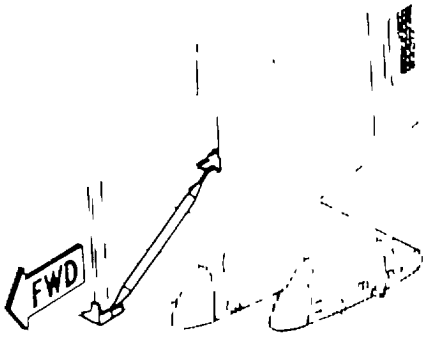

Figure 8-62. Example of Structural Tubing

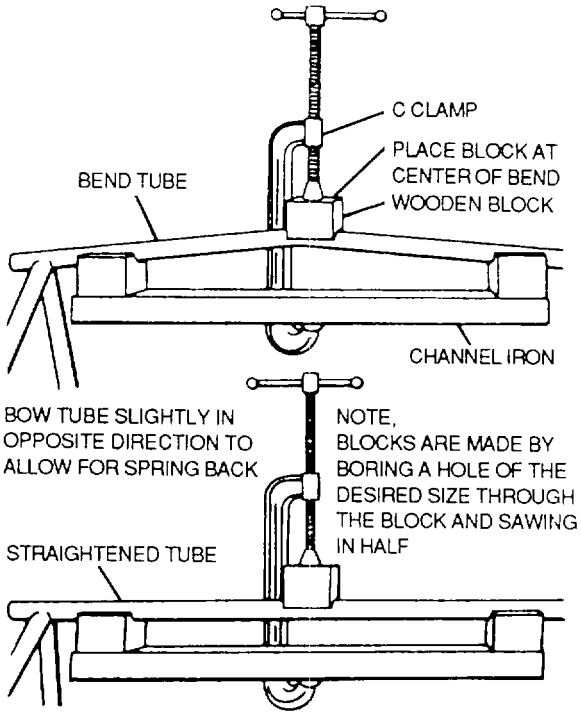

Figure 8-64. Straightening Bowed Steel Tubes

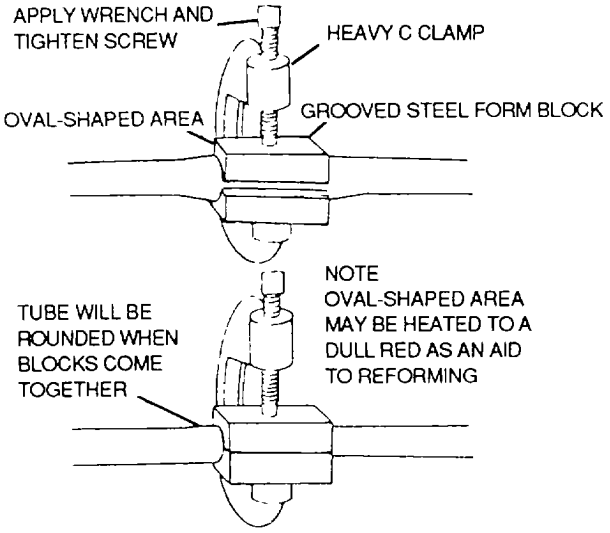

Figure 8-63. Correcting Oval Shaped Steel Tubing Distortion

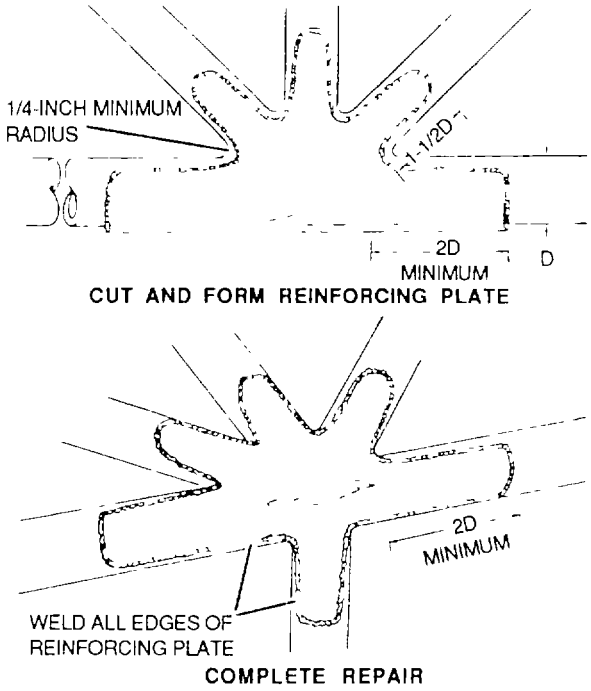

Figure 8-65 Reinforcing a Dent at a Steel Tube Cluster Joint

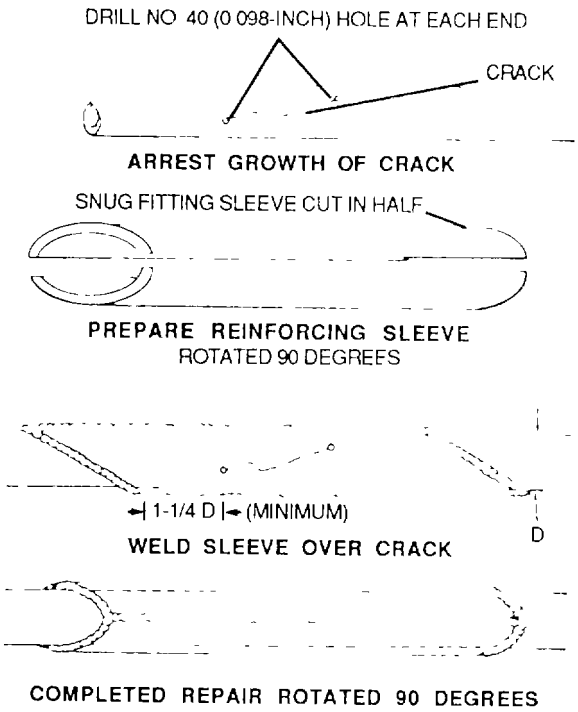

Figure 8-66. Repair of Sharp Dent or Crack in Length of Steel Tubing

(h) Tack weld the two sleeves to replace tube in two places before welding

(i) Apply a uniform weld around both ends of one of the reinforcing sleeves and allow weld to cool. Then weld around both ends of remaining reinforcing sleeve

(j) After welding, flush interior walls of the tubing with linseed oil heated to 165 °F (74 °C) Flush interior walls as follows

1 Fill tubing through the small holes provided at the extremities of the tube, or if holes are not present, drill suitable filler holes

2 Wipe excess linseed oil from outer circumference of tube

3 Seal filler holes with self tapping screws dipped in epoxy primer MIL-P-23377

(13) Splicing using larger diameter replacement tube. Splicing structural tubes using larger diameter replacement tubes requires the least amount of cutting and welding, However, this splicing method cannot be used where the damaged tube is cut too near adjacent cluster joints or where bracket mounting provisions make it necessary to maintain the same replacement tube diameter as the original. To repair, see figure 8-70 and proceed as follows

(a) Cut original damaged tube squarely, leaving a minimum short stub equal to 2-1/2 tube diameters on one end and a minimum long stub equal to 4-1/2 tube diameters on other end

NOTE

Cuts must be away from middle of affected tube

(b) Cut a length of steel tubing having an inside diameter approximately equal to outside diameter of damaged tube and with same thickness, or greater, than damaged tube. The section of tubing should be of such length that each end of tube is minimum distance of 1 1/4 tube diameters (dimension L, figure 8-70) from end of cut on original tube

NOTE

Use fishmouth cut replacement tube where possible

(c) Remove burrs from edges of replacement tube and original tube stubs

(d) When a fishmouth cut is used, file out sharp radius of cut with a small round file

(e) Spring long stub of original tube from normal position, slip replacement tube over long stub, then back over short stub Center replacement tube between stubs of original tube

(f) Tack weld one end of replacement tube in several places, then weld completely around end

(g) Allow weld to cool completely in order to prevent distortion, weld remaining end of replacement tube to original tube

(h) After welding, flush the interior walls with Federal Specification A-A-371 linseed oil heated to 165'F (74°C) or MIL-C-16173 Grade 1 Corrosion Preventive Compound (cold application), depending on which substance was originally used. A clear color indicates linseed oil, a dark color indicates MIL-C-16173 Grade 1 Flush interior walls follows

1 Fill tubing through the small holes provided at the extremities of the tube, or if holes are not present, drill suitable filler holes

2 Wipe excess linseed oil from outer circumference of tube MIL-P-23377

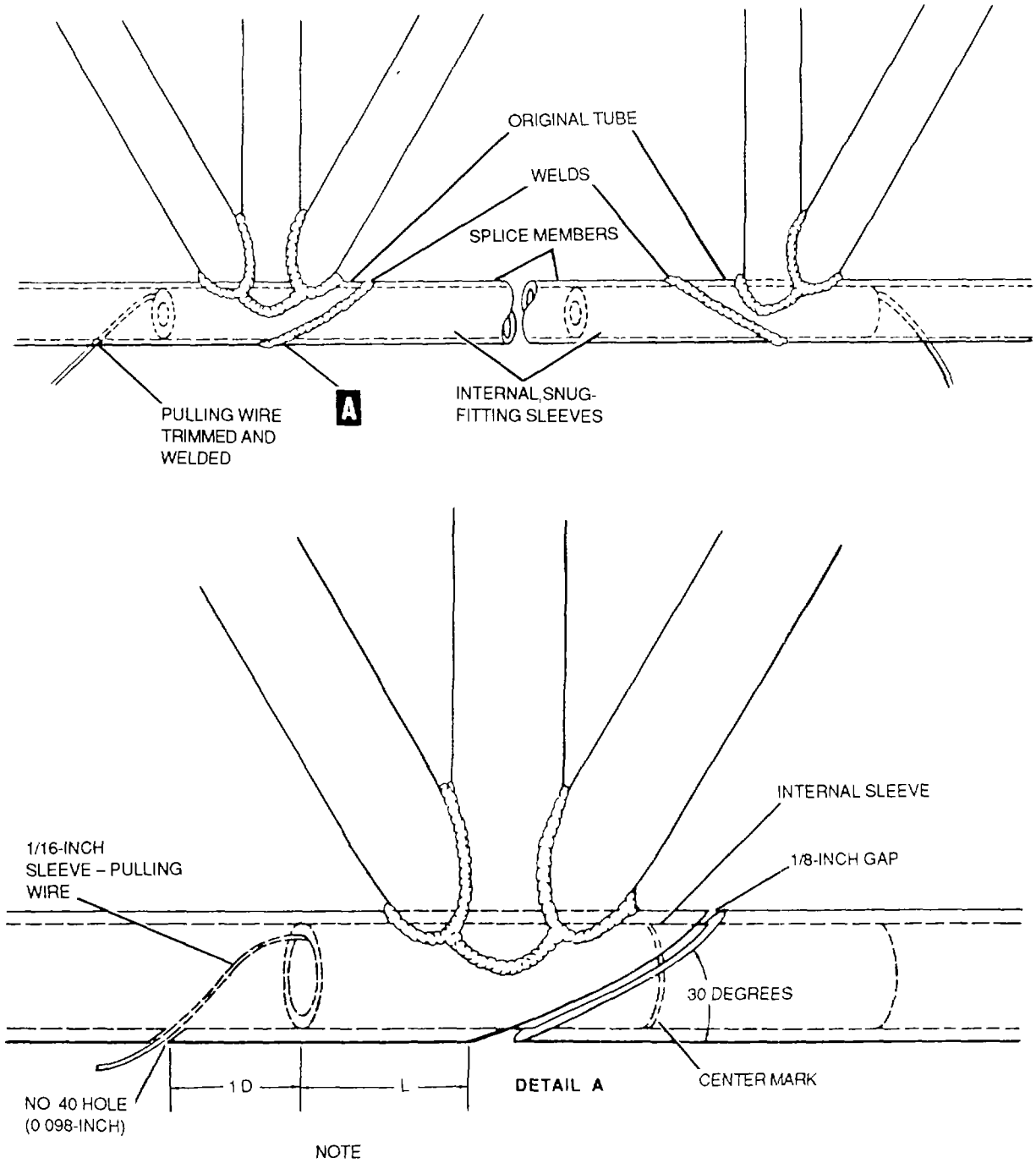

NOTE

L = 1 INCH OR 1-1/4 D WHICHEVER IS GREATER

Figure 8-67. Steel Tube Inner Sleeve Splice

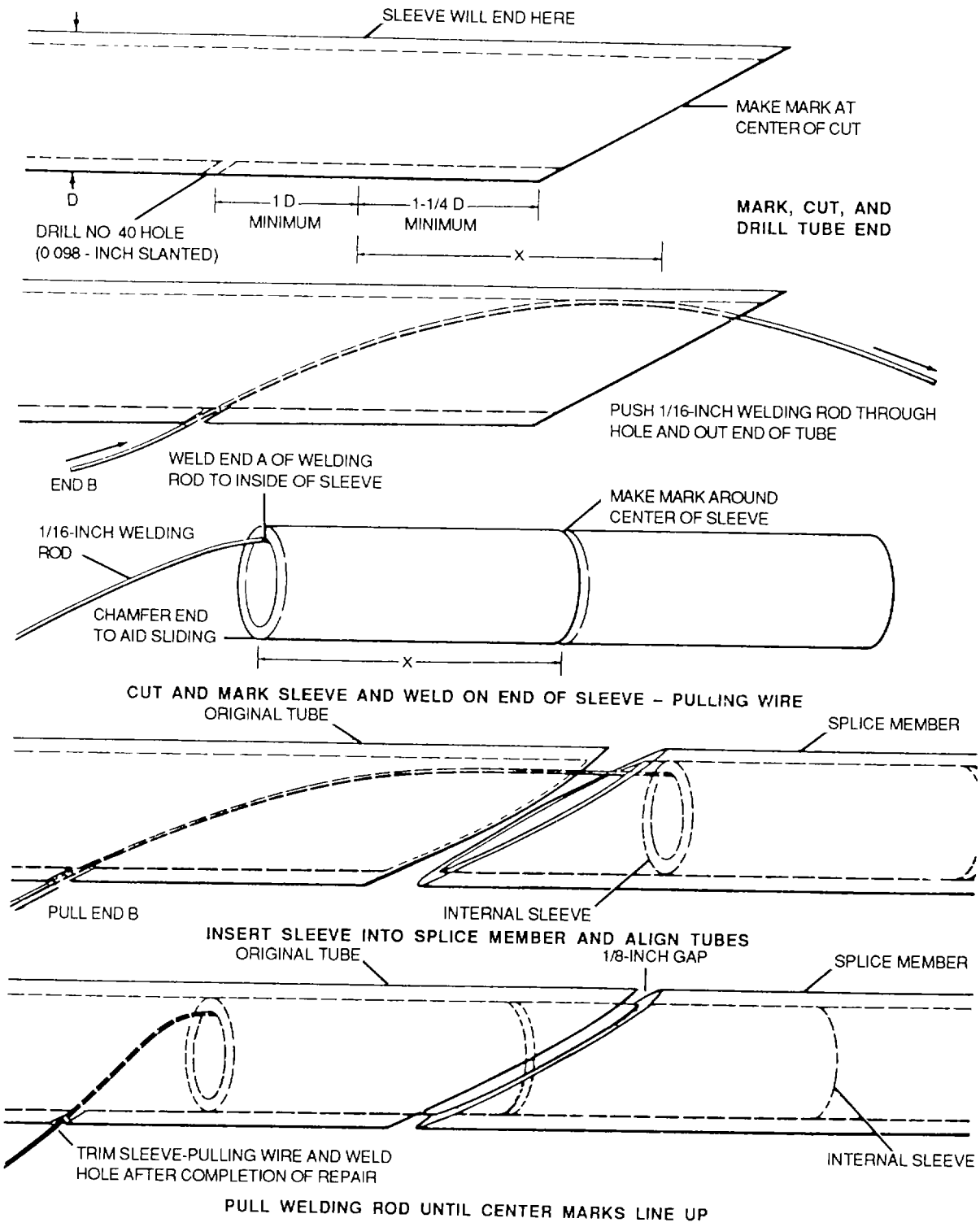

Figure 8-68. Centering Inner Sleeve in Steel Tube

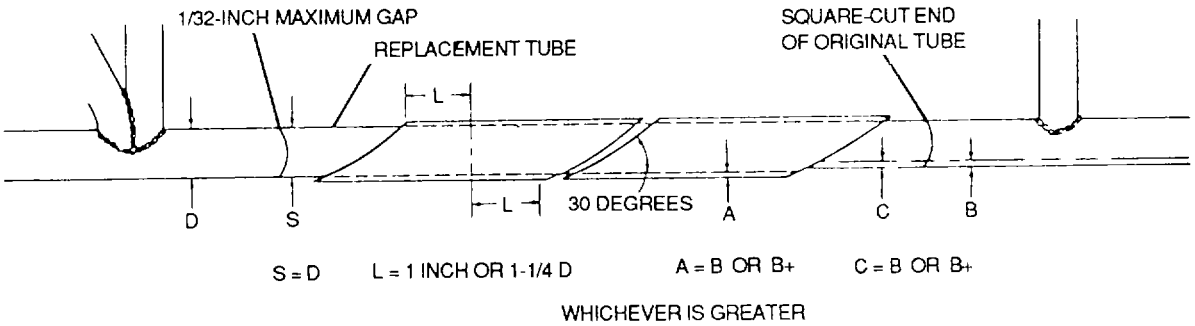

CUT OUT DAMAGED PORTION OF TUBE, PREPARE REPLACEMENT TUBE, AND CUT SLEEVE

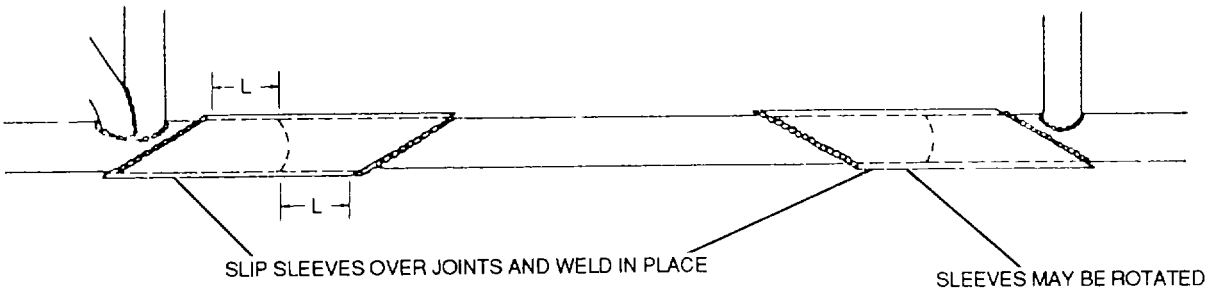

COMPLETED SPLICE USING DIAGONALLY CUT SLEEVES

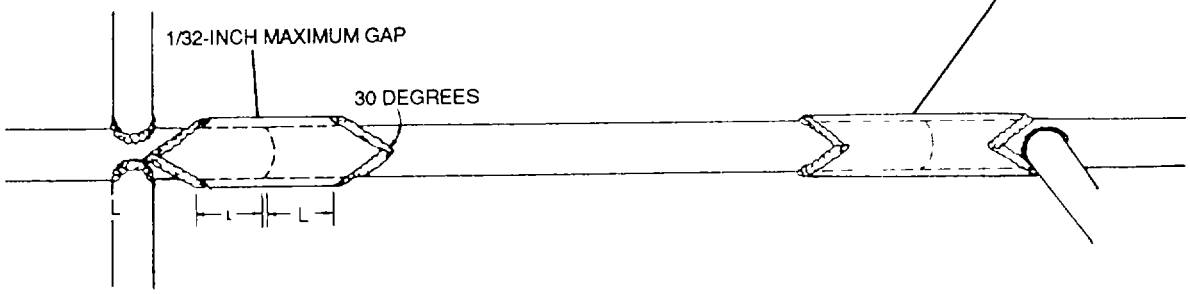

COMPLETED SPLICE USING FISHMOUTH CUT SLEEVES

Figure 8-69. Steel Tube Using Outer Sleeve Splice

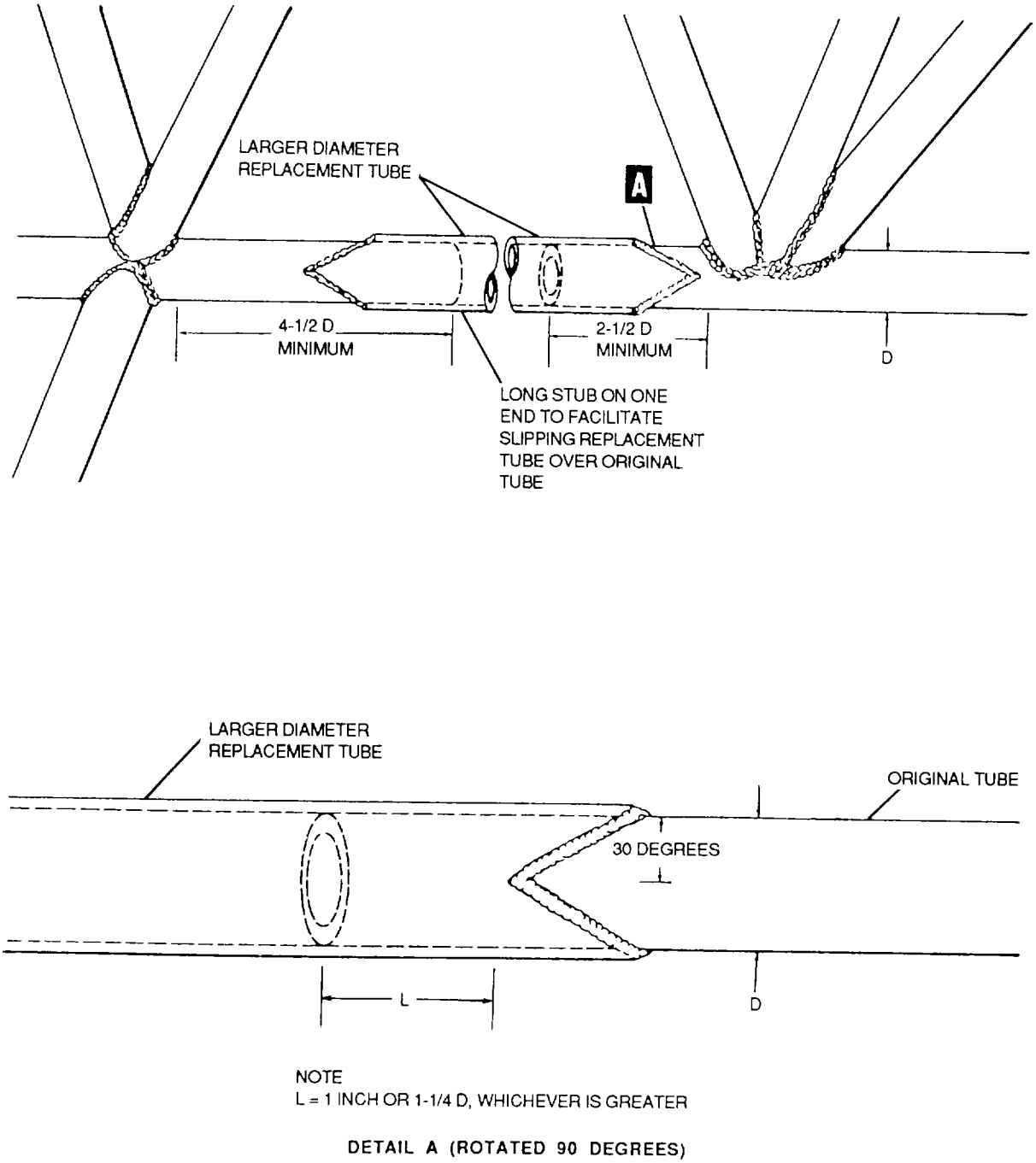

Figure 8-70. Steel Tube Fishmouth Splice Using Large Diameter Replacement Tube

3 Seal filler holes with self tapping screws dipped in epoxy primer MIL-P-23377.

(i) Refinish area.

(14) Replacing structural tubes. Tube replacement is necessary where an original tube stub is too short to attach a replacement and where splice welds will be made in the middle third of a member. Proceed as follows:

CAUTION

While cutting out tube, exercise caution to prevent damage to adjacent welds or tubes Failure of the structure may occur.

(a) Use a fine-toothed hacksaw and remove tube carefully and completely from structure when it is necessary to remove a member at a joint or from a cluster of tubes.

(b) Where new welds are to be made over location of existing welds upon insertion of new member, completely chip or file off old weld.

(c) When installing a new tube member, allow a clearance of 1/32 inch at either end for expansion.

(d) Clean welded joints with a wire brush or steel wool.

NOTE

Unless a welding jig is available, the actual process of welding should be accomplished in as systematic a manner as possible to avoid distortion from unsymetrical application of heat.

(e) After welding, flush the interior walls with Military Specification A-A-371 linseed oil, heated to 165°F (74°C) or Military Specification MIL-C-16173 Grade 1 Corrosion Preventive Compound (cold application), depending on which substance was originally used. A clear color indicates linseed oil, a dark color indicates MIL-C-16173 grade 1 Flush interior walls as follows:

1 Fill tubing through the small holes provided at the extremities of the tube, or if holes are not present, drill suitable filler holes.

2 Wipe excess linseed oil from outer circumference of tube.

3 Seal filler holes with self tapping screws dipped in epoxy primer MIL-P-23377.

(f) Refinish area.

CHAPTER 9

SANDWICH CONSTRUCTION REPAIR

9-1. General. Sandwich construction may be defined as a laminar construction which consists of a combination of alternating, dissimilar materials. These materials are assembled and intimately fixed in relation to each other so that the properties of each can be used to attain specific structural advantages for the whole assembly.

a. Construction Sandwich construction in flat or curved panels is normally used on aircraft. The panels consist of three or more laminations of widely dissimilar materials which are considered similar in nature when bonded together. The function of the center layer, or core, is to hold the other layers, or facings, apart, and to provide sufficient stiffness to prevent facings from becoming elastically unstable when put under high stress loads.

b. Design. The design of the sandwich panel is governed by the use for which it is intended, as the panel itself is a structure. Such panels are especially useful in the manufacture and repair of aircraft, because they utilize lightweight core materials in combination with facings to obtain strong rigid panels of minimum weight.

c Modern Use Applications for the use of sandwich construction in the manufacture and repair of aircraft are being made in the production of bulkheads, control surfaces, fuselage, wings, empennage skins, radomes, and shear webs.

9-2. Core Materials. Core materials are very important in the manufacture of sandwich constructed parts because they supply much of the strength for which the part is designed. The core materials must be able to transmit stress loads and, at the same time, conform to definite weight limitations. The stresses to which the core is subjected will vary with the strength requirements of the sandwich over a wide range, depending upon the application, therefore, the allowable weight of the core must necessarily be adjusted to its use. Core materials for sandwich construction are of four general types, natural, foamed or cellular, foamed-in-place, and honeycomb.

a. Natural Core Materials. The natural core materials are wood. The principle wood used is balsa, with mahogany, spruce, and poplar being employed as inserts and edge banding.

(1) *Characteristics of balsa.* If care is exercised in the selection of balsa, excellent properties for core material application are available. Those directly associated with the manufacture of sandwich construction have found that properly selected balsa has desirable characteristics of lightweight, uniform high compressive and tensile strength, elasticity, retention of strength through wide ranges of temperature, ease of machining, and good bonding characteristics.

(2) Defects. The characteristics of any wood will vary because of growth conditions. That is why proper selection, inspection, and grading are necessary. It is required that defects such as core decay, seasoning defects, pith, large knots, and excessive slope in grain be eliminated. The trained individual can readily detect any of these defects.

(3) *High strength woods.* High strength inserts are usually needed for sandwich panels at points of attachment and along exposed edges. End grain mahogany has desirable characteristics for use under these conditions. One of these traits is the specific gravity of end grain mahogany, which is determined by weight and measurement of planed boards. When taken on boards having 8 to 12 percent moisture content, the specific gravity is normally 0.04 to 0.56 Stated in simpler terms, this means that the weight of planed mahogany boards having a moisture content of 8to 12-percent is normally 25 to 35 pounds per cubic foot. Some mahogany has defects which make It undesirable for use as core materials, such as decay, seasoning defects, loose knots, and compression failures. These defects must be detected and the boards eliminated.

(4) *Spruce.* Spruce is sometimes used as a substitute for mahogany as a high-strength insert. The poor machining properties of spruce, and the difficulty encountered in bonding end grain surfaces, are responsible for its limited use as a core material.

b. *Foamed or Cellular Core Materials.* Since some disadvantages, such as variable density and high moisture absorption, are encountered when using natural core materials, attempts have been made to develop synthetic core materials having satisfactory strength properties. The specific gravity of otherwise suitable base materials is too high when used as a solid mass. Therefore, materials such as these must be foamed, expanded, or processed by some other method that will reduce the apparent density to a suitable range

The processes used can be controlled, thus making it possible to predict within relatively narrow limits the physical properties of the resulting core material. Cellulose acetate, expanded rubber, and polystyrene are examples of foamed or cellular core materials. These materials are available in varying specific gravity ranges.

c. Foamed-in-Place Core Materials. Certain types of radomes made sandwich construction require the use of core materials that will provide desirable characteristics of radiation transmission. The thickness of the structure must be tapered, and close control of facing, core, and sandwich thickness must be maintained. To obtain these desirable characteristics, efforts have been directed toward the development of a core material that can be foamed-in-place between premolded, laminated, glass fabric base plastic facings, and that will adhere to these facings. A core material such as this is not as strong as glass fabric honeycomb. Its advantages are uniformity of cell structure, elimination of core joints, a thinner and more uniform bonding layer between facings and core, accurately premolded void-free inner and outer skins, and greater flexibility in manufacture. Uniform density foams, with 3to 30pound density per cubic foot, have been produced by using these materials. Materials having density of 10 to 12 pounds per cubic foot are most commonly used. These alkyd di-isocynate foams have also been used for stabilizing hollow steel propeller blades and control surfaces made from aluminum alloy.

d *Honeycomb Core Materials*. The use of honeycomb-type core materials has increased during the past few years. It is made by fabricating sheet material in such a manner that a cross section of the structure resembles a bee's honeycomb. The desired properties and densities are produced by varying the type of sheet material, its thickness, and the cell size. Honeycomb core materials with a specific gravity range of 0.05 to 0.16 (3 to 10 pounds per cubic foot) are available. Honeycomb as a core material has proven to be versatile and practical because of the wide variations and combinations of sheet type, fiber direction, type of resin, cell size available for use, and the exceedingly broad specific gravity range. Resin-impregnated paper shows definite promise as a honeycomb core material. Experiments are being conducted to determine the advisability of using asbestos, glass fiber mat, and magnesium foil in honeycomb structures. The glass fiber mats are less desirable than the others because they cannot be corrugated with any degree of success. The most common honeycomb materials in use today, however, are glass cloth, cotton cloth, and aluminum

(1) Glass cloth honeycomb material . Glass cloth honeycomb material is made by impregnating glass cloth with a polyester or phenolic resin. Honeycomb structure made of this material is available in 3/16-, 1/4-, and 3/8-inch hexagonal cell sizes. The normal specific gravities available are 0.08, 0.13, and 0.15 (5, 8, and 9 pounds per cubic foot), however, the specific gravity of each cell size can be vaned over a wide range.

(2) Cotton cloth honeycomb material. Cotton cloth honeycomb core material with hexagonal cells approximately 7/16 inch in diameter, and with densities of 0.06 and 0.12, are available for use in sandwich structures. The weight of the material with a density of 0.06 is 4 pounds per cubic foot, while the weight of the 0.12 density material is 8 pounds per cubic foot. It does not matter if the density is 0.06 or 0.12 so far as the treatment of the cloth is concerned, because phenolic-type resin is used to give the necessary compressive strength and resistance to moisture. The chief use of cotton cloth honeycomb materials is in the manufacture of sandwich partitions, bulkheads, and baggage rack floor panels it is unsuited for radar because of its poor dielectric and moisture absorption properties.

(3) Aluminum honeycomb material. Aluminum honeycomb is made by corrugating sheets of aluminum foil and cementing them together to form the honeycomb structure. The density of the structure can be closely controlled by varying the foil thickness and the cell sizes. Cell sizes available are 1/4, 3/8, and 1/2 inch across. Perforations permit the escape of volatile gases and the passage of air through the core structure. Limited double curvature forming is possible when the lighter foil gauges are used.

9-3. Facing Materials. The facing material is very important to the effectiveness of aircraft parts made of sandwich construction, as facings carry the major loads applied to the structure. The characteristics of the facings must include the necessary stiffness, stability, configuration, and strength for the part. Facings sometimes have other uses, such as providing aerodynamic smoothness, rough nonskid surfaces, and tough, wear-resistant floor coverings. Facings are classified into two types, depending on the materials used. One type is that of the lugid, strong materials, such as metal, fiber-reinforced plastic, or plywood sheets that are bonded to the core. The other type facings are fabric, or mat materials, that are wet-laminated in place, with the resin giving the facing acceptable rigidity and securing the bond to the core. The advantages and limitations of each facing material must be considered, and care must be exercised in choosing the composition

that is comparable to the requirements of the sandwich, fabrication, assembly, and maintenance details.

a Aluminum Alloy Facing Maternal. Aluminum alloys with thickness of 0.12 to 0.064 inch are commonly used as facings for structural and nonstructural sandwich application. The alloys of aluminum best suited for sandwich structures are 7075S-T6, or 2024S-T3 and 2014S-T6 Sheets coated with corrosion-resistant aluminum (clad) are preferred because they have maximum corrosion resistance during processing and when exposed to extreme weather conditions. Special care must be exercised to avoid wrinkles, dents, and half moons when aluminum sheets are handled. Such defects cannot be completely removed during processing, and could cause premature failure of the panel.

b. Steel Facing Material. The use of steel in aircraft sandwich construction is very limited. The best example is its use in sandwich propeller blades, and such usage will probably increase as the power output of new engines increases. The use of sandwich structure makes it possible to increase the size of the propeller and, at the same time, avoid the problem of too much weight. The chief disadvantages are its poor corrosion resistance and high weight.

c. Magnesium Alloy Facing Material. Magnesium alloy sheets were seldom used in the past, and then mostly in experimental work. The probability of using magnesium more extensively in the future is very likely because of its low density and stiffness characteristics.

d Plywood Facing Material. Plywood facings were first used successfully in the British Mosquito Bomber. This marked the first major structural application of sandwich construction in the aircraft industry. Plywood facings are seldom used in the manufacture of major structural components of aircraft in the United States. Their use is confined primarily to the fabrication of lightly stressed bulkheads, partitions and baggage racks.

e. Resin-Impregnated Glass Cloth Facing Material. Resin-impregnated glass cloth has acceptable properties for use as facing on structural sandwiches if the fabrication processes are properly performed. Because of its excellent dielectric properties, it is being used almost universally for sandwich-constructed radomes. A wide range of directional strength properties are possible, as the glass cloth is available in a variety of weaves which make it practicable to fit the fiber directions in the facing.

f Glass Fiber Mat Facing Material. Glass fiber mats are used sparingly in aircraft sandwich construction. The main reasons for not using this type material are its nonuniformity in thickness, resin content, and its low strength when compared to glass cloth.

9-4. Adhesives and Resins. Conventional synthetic-resin adhesives can be used in the fabrication of plywood-faced sandwich parts. The type of synthetic-resin adhesives to use for a particular job will depend upon the durability requirements, the effect of adhesive solvents on the core material, and the limits of bonding conditions, such as assembly time, pressure, and curing conditions. Recently, resin adhesives were developed that are satisfactory for bonding metal-to-metal and metal-to-wood. Most of these adhesives are very complex, and their chemical structure is not as simple nor as well known as that of the wood-working adhesives. As a result, it is necessary to use some system that will make the selection of the proper adhesive easier. The system of classification that was adopted is that of cunring temperature and techniques by which the adhesives are used. The three general types of adhesives for bonding are classified as high-temperature setting adhesives, combination or two-step adhesives; and room temperature setting adhesives.

a High-Temperature Setting Adhesives. The high temperature setting adhesives require that a joint be cured under pressure at temperatures of 250 to 350°F (121 to 177°C). Some of these adhesives are supplied in dual parts a liquid and a film tape, or as two liquids. These dual-adhesive systems are used to produce better adhesive flow characteristics during cunring.

b Combination or Two-Step Adhesives. Combination or two-step process adhesives are the same type as those used for direct bonding to metals, known as primers, or primary adhesives, and are applied on the metal surface only. The primary adhesive is cured in an oven or on the platens of a hot press at temperatures of 300 to 335°F (149 to 168°C) The final bonding of the primed metal to the core material is made under pressure at room temperature, or slightly higher, by using a secondary adhesive.

c Room Temperature Setting Adhesives. Room temperature setting adhesives are available, but thus far have not produced a bond comparable in strength and durability to that obtained by direct high-temperature setting or the two-step method.

d Storage. The method of storage and mixing adhesives varies with the manufacturer. Some manufacturers recommend the storage of adhesives at room temperatures, while others contend that storage should be at temperatures of 35 to 70°'F (2 to 21°C)

Most manufacturers recommend that the adhesive be stored in containers with tight covers to prevent the loss of solvents and contamination by dirt and moisture. The storage life of adhesives, maintained at the temperature mentioned above, will vary from 4 months to several years.

(1) *Moisture contamination.* Many of the adhesives are sensitive to the presence of moisture, making additional precautions necessary to prevent contamination from condensed atmospheric moisture. When a supply of adhesive is received, the contents should be thoroughly mixed, and then removed to smaller containers, and placed in storage at 35 to 70°F (2 to 21°C) Ensure that containers are completely filled so moisture-laden air will not be entrapped when the covers are installed. Adhesives should be removed from cold storage and allowed to warm to room temperature before they are used. Check that the covers are on tight to prevent condensation of moisture during the warm-up period. Never return a partially filled can of especially sensitive adhesive to cold storage.

(2) Mixing during storage. The ingredients of some adhesives tend to separate during storage. Manufacturers of these adhesives recommend that they be thoroughly agitated in the container at least once every 2 weeks during storage, and thoroughly mixed just prior to using if, after mixing, an adhesive is gelled, or heterogeneous, it should not be used unless some method of breaking the gel is recommended by manufacturer.

e Application. Application of most adhesives involves mixing, thinning, and application.

(1) Mixing. Most metal bonding adhesives available are supplied as one-part adhesives and require only thorough stirring before being used. A few are supplied as two-resin ingredients to be applied successively to the surfaces being bonded. The instructions of the manufacturer should be closely followed in the use of these adhesives.

(2) Thinning. The viscosity of the adhesive as received is sometimes too great for proper spreading by the method of application being used. When this condition is encountered, the adhesive should be thinned in accordance with the recommendations of the manufacturer.

(3) Application. The adhesive used in sandwich construction can be applied to the fraying surfaces by any convenient means that will give a smooth, uniform spread of the adhesive. Methods such as a brush, hand roller, conventional roll glue spreader, gear-type applicator, spray gun, and in some instances dipping, have been used.

9-5. Classification of Damage. Prior to any repair of sandwich construction, the damage must be assessed in order to select the appropriate repair procedure. The following paragraphs describe the inspection techniques and guidelines for determining the extent of certain typical defects. These classifications should be used in conjunction with the applicable aircraft maintenance manual.

a *Coin-Tapping Technique*. Inspection of metal bonds, a coin, such as a quarter, can be held between the thumb and forefinger and lightly bounced on the surface to detect any area where the bond is not complete. A well-bonded spot will have a sharp, metallic ring, while an unbonded spot will have a dull sound. Refer to paragraph 9-6 for repair procedures.

b *Missing Core.* Missing core damage occurs when the core bond is broken or a core-to-core splice is unbonded over a small area. Locate by coin-tapping both sides of the panel skins. The coin-tapping results should be analyzed so that the damage is not misread or confused with skin core voids described in paragraph 9-5c. X-ray can be used to confirm a missing core condition.

c *Skin Core Voids*. Skin core voids occur when the bond between skin and core is broken over a small area. Locate by coin-tapping one side of the panel. When skin core voids occur on both sides of the core at the same location, X-ray can be used to confirm that there is not a missing core condition as described in paragraph 9-5b.

d *Skin Doubler Voids*. Skin doubler voids occur when the bond between skin and a doubler is broken. Locate the void by coin-tapping.

e *Dents*. Dents are limited to those in the surface skin only, not exceeding 4 square inches in area, not deeper than 10 percent of panel thickness or 0.10 inch, whichever is less. They must be free of fractures or punctures, and must not occur more than once in any 40-inch length of panel.

f *Small Single Skin Damage.* Small single skin damage is damage such as cracks and small punctures through one skin where the core is not affected or where the puncture is so small that core replacement is impractica.

g. Large Single Skin Damage. Large single skin damage is damage to one skin where a core replacement is practical and necessary. Such damages include large punctures through one skin, skin-core voids over a large area, or a missing core condition of greater magnitude.

h. Double Skin Damage. Double skin damage is damage which affects each skin and the core.

i Scotchply Edge Member and Corfil Edge Filler Damage. Scotchply edge member and Corfil edge filler damager includes delaminations, cracks, splits and holes in the glass fabric edge members and loose, cracked or missing edge filler.

j Unbonding and Ply Separation See paragraph 9-5a for inspection procedures for these defects.

9-6. Repair of Sandwich Construction. Repair procedures for damaged honeycomb structures will vary from one manufacturer to another, however, the overall methods and operations are similar. The following paragraphs describe typical repairs for common defects. Always refer to the applicable aircraft maintenance manual for repair procedures for a specified type of damage.

a. Cleanliness of Repair Area. Though general procedures may differ, one thing on which all manufacturers agree is that the area to be bonded must be absolutely clean. Several cleaning agents are recommended. Determine which one is recommended for the applicable aircraft by reading all the instructions for its use in the appropriate manual.

b Sample Honeycomb Repair. Figure 9-1 shows damage to a honeycomb skin. This particular illustration shows a bullet hole through both facings and core material on both surfaces.

(1) Method for cleaning out damage. Figure 9-2, detail A, shows two different methods of cleaning out the damage, and the typical maximum edge distances.

(2) Damage limits. Detail A of figure 9-2 shows that the distance from the edge of the small circular cutout to the edge of the sandwich structure must be at least 3 1/2 inches. Detail B gives the maximum permissible limits of the repair. The maximum width of a repair to the outer facing of the upper surface wing skin is 12 inches. The inner facing should be cut back 2 inches, on each side, beyond the edge of the cutout for the outer facing. The diameter of the cutout for the plug patch on the inner facing of the lower skin should not exceed 3 inches, and the diameter of the cutout for the outer facing plug repair should not exceed 1 inch.

(3) Doubler material. Details C and D give the type of material from which the doubler should be made, the type of bolts and the material to use for the filler. The doubler should be made of 7075ST aluminum alloy, 0.025 inch thick, and the ply should be made of 7075ST aluminum alloy, the same thickness as the outer facing of the lower wing skin.

(4) Installation of repair parts. Detail E shows the application of a typical insert and splice plates for the upper surface wing skin. The application of the filleting compound for the plug-type repair is also shown. Detail F shows the application of tape over the wood filler.

(5) Completed repair. Detail G shows the finished repair after all sealing has been completed. Detail H shows a cross section of the completed repair.

c Bonded Stiffeners. In some aircraft, magnesium stiffeners are bonded to magnesium skin in the trailing edge wing panels. The cleaning pnming, precurinng of parts, positioning, and final cure of the bond are very carefully controlled. The instructions in the applicable manual should be followed very closely. The bond is made by the following processes.

(1) Each fraying surface is coated with EC1290 primer which is precured in an oven.

(2) MMM-A-132, Type I, Class 2 adhesive is applied to the joint in tape form.

(3) The bond is cured on a heated platen (table) with pressure of approximately 10 psi applied by a vacuum bag over the top of the part.

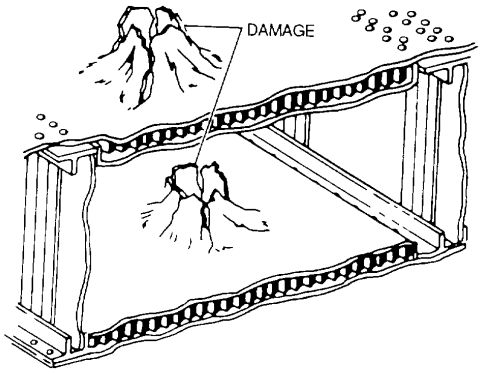

Figure 9-1. Damaged Honeycomb Skin

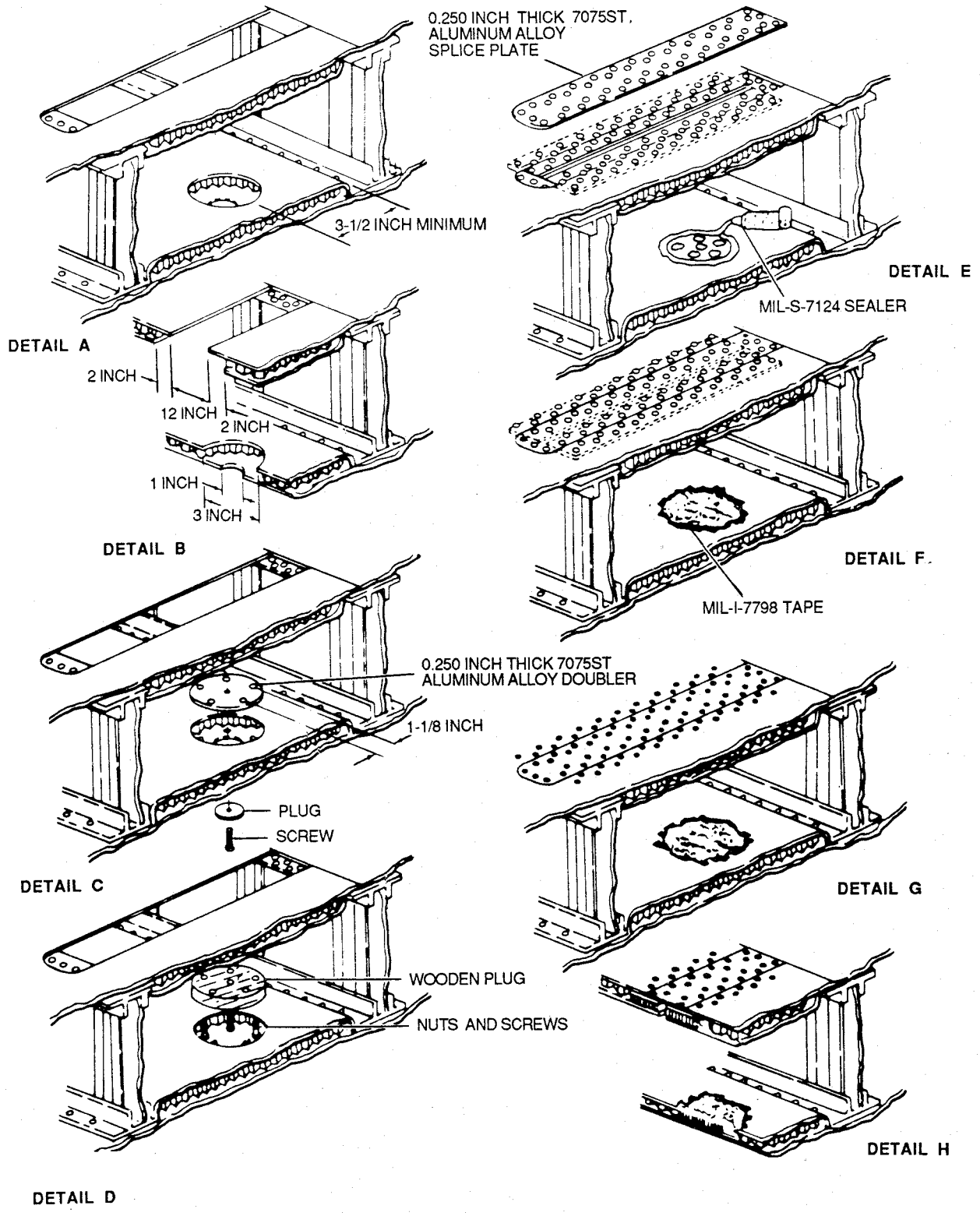

Figure 9-2. Honeycomb Repair

d. Bonded Magnesium Panels. Some aircraft use honeycomb bonded magnesium construction in trailing edges. The repair of these panels must be made with an adhesive which cures at a lower temperature than the rest of the bonds in the panel. To avoid the field problems of heated baths and complicated processes required to clean magnesium, aluminum repair parts are used. An exploded view of the repair parts are shown in figure 9-3.

(1) Cleaning. The repair structure is cleaned by stripping the epoxy primer with thinner, Military Specification MIL-T-81772, and removing old adhesive with paint remover, Federal Specification TT-R-248.

(2) Priming. Both faying surfaces are primed with EC1290 primer and precured at 220 to 240° F (104 to 116° C) for 35 to 45 minutes with heating blocks.

(3) Adhesive selection. Epon 6 is used as the adhesive for repairs. A curing agent (accelerator) is mixed with the Epon, and the adhesive is applied to one surface of the joint. The final bond is cured under a pressure of 4 to 20 psi at 160 to 200° F (71 to 93° C) for 45 to 90 minutes.

(4) Pressure application. Pressure is applied to the repair parts, and counterpressure is applied to the opposite side of the repair area with jigs. The final bond thickness after cure must be within 0.005 to 0.025 inch.

(5) Inspection. Voids or blisters within the cemented joint can only be determined by cutting through the joint. The strength of the joint is tested by shear and peel tests. The completed bond cannot be inspected other than by destruction of the bonded joint. A visual inspection for the presence and continuity of the adhesive is the only mode of inspection.

e. Repair of Skin Panels. There are three typical honeycomb repairs for damages. Areas requiring such repairs are: the aft portion of the trailing edge of the control surface; the control surfaces forward of the trailing edge which require the repair of both skins as well as the honeycomb core; and crack or scratch repair.

(1) Trailing edge aft portion repair. If the aft portion of the trailing edge of a control surface is damaged, see figure 9-4 and proceed as follows:

(a) Make a micarta filler plug, or one of 2024 or 7075 aluminum alloy, to fit the cleaned out area where the damage was removed.

(b) Make a doubler to lap over the repair and up to the joint at the aft beam.

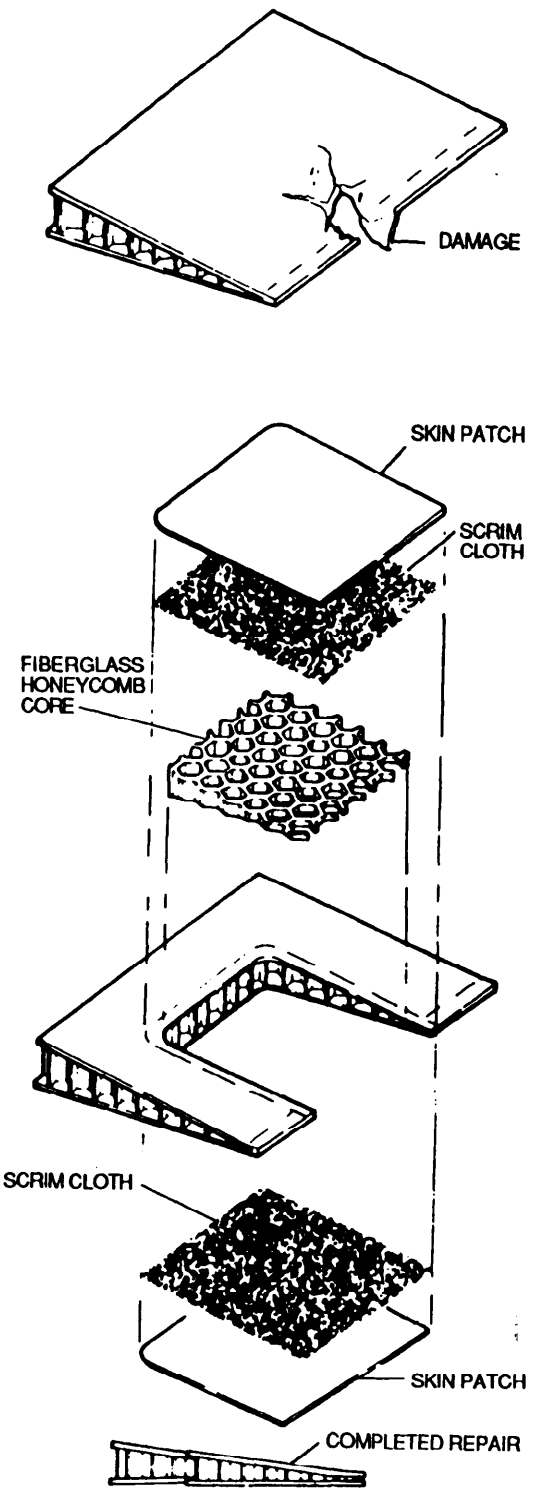

Figure 9-3. Bonded Magnesium Panel Repair

(c) Remove existing rivets from the beam in the repair area.

(d) Apply Epon 8 to all faying surfaces (mating or adjoining surfaces).

(e) Bond and rivet the repair through the existing rivet holes in the beam with blind rivets.

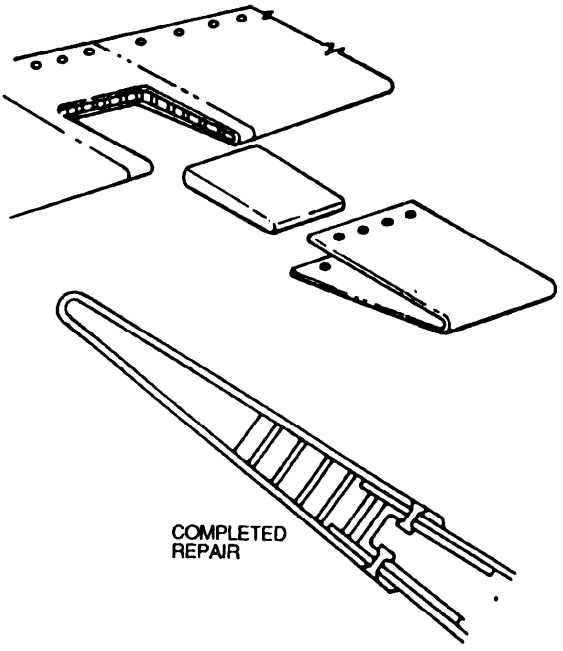

Figure 9-4. Trailing Edge Repair

(2) Skin repair forward of trailing edge. A repair to the control surface forward of the trailing edge, involving repair of both skins and the honeycomb core, is made as follows:

(a) Remove the damage with a hole saw or router. The diameter of the cutout in the bottom skin will be 1 inch larger than the cutout in the top skin.

(b) Trim the honeycomb to the diameter of the larger hole.

(c) Make a flush patch and doubler and install in the top skin.

(d) Replace the honeycomb core by an insert of the same material.

(e) Coat all faying surfaces with Epon 8.

(9 Make a doubler, filler plate, and flush skin patch and install with flush head blind rivets.

(g) Allow the bond to cure at room temperature over a long period, or at elevated temperatures over a short period.

(3) Crack or scratch repair. Figure 9-5 shows a typical crack or scratch repair.

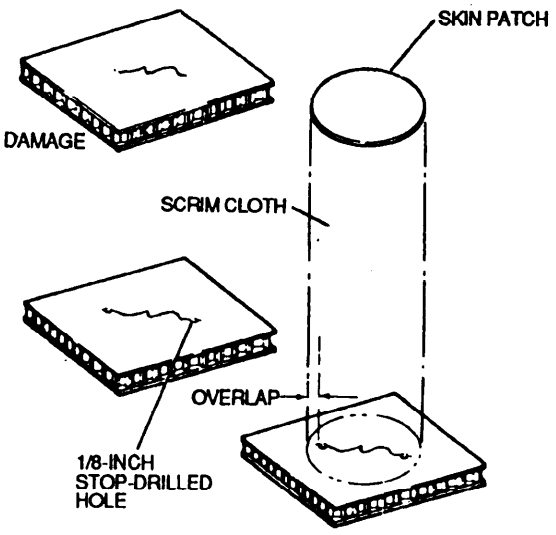

Figure 9-5. Crack or Scratch Repair

f. Repair of Missing Core. Missing core contained within an area of 3 square inches and limited to one repair per panel may be repaired as follows:

(1) Drill one 0.098-inch diameter vent hole through the skin near one end of the damage, and one 1/4inch diameter filling hole through the skin near the other end of the damage.

NOTE

Refer to applicable aircraft system maintenance manual for specific instructions in selection and mixing of adhesive.

(2) Mix a batch of adhesive.

(3) Use an airdriven caulking gun, 250-6 or equivalent, equipped with a nozzle smaller than 1/4-inch diameter. Fill the unbonded area with adhesive through the filling hole until the core is filled and adhesive comes out the vent hole.

(4) Allow adhesive to harden and sand it at the two hole locations to fair with the skin. Refinish the repair to match adjacent area.

g. *Repair of Skin Core Voids*. Voids having a maximum area that can be encompassed by two 2-inch diameter circles and not exceeding one repair in any 40-inch length of panel may be repaired as follows (see figure 9-6).

(1) Locate the center of the void and drill a 1/4 inch diameter filling hole.

(2) Spoil the core under the bond void, down to the opposite skin, by rotating an internal cutter inserted through the filling hole. The spoiled core area must not exceed 6 3 square inches (figure 9-6, detail A).

NOTE

An internal cutter can be made from an Allen wrench. Sharpen the short leg of the wrench so that when rotated. It will cut and push the core material 1/4 inch beyond the void to leave a clean hole.

(3) Drill a 0.098 inch diameter vent hole through the skin at the edge of the spoiled core.

(4) Mix a batch of adhesive.

NOTE

Refer to applicable aircraft maintenance manual for specific instructions in selection and mixing of adhesive

(5) Use an air-driven caulking gun, 250-6 or equivalent, equipped with a nozzle smaller than 1/4-inch diameter. Fill the spoiled area with adhesive through the filling hole until the area is filled and adhesive comes out the vent hole (figure 9-6, detail B).

(6) Allow adhesive to harden and sand it at the two hole locations to fair with the skin. Refinish the repair to match adjacent area.

NOTE

A void underneath a pan can be repaired in the fashion shown in figure 9-7.

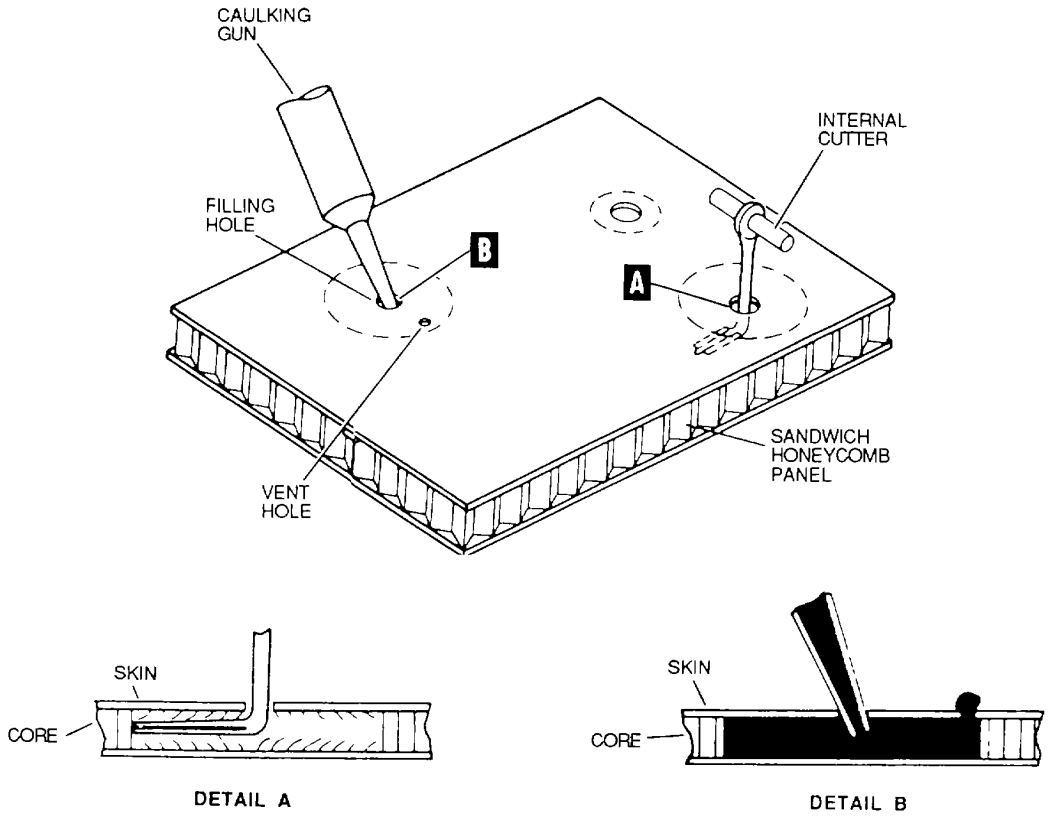

Figure 9-6. Repair of Skin Core Voids

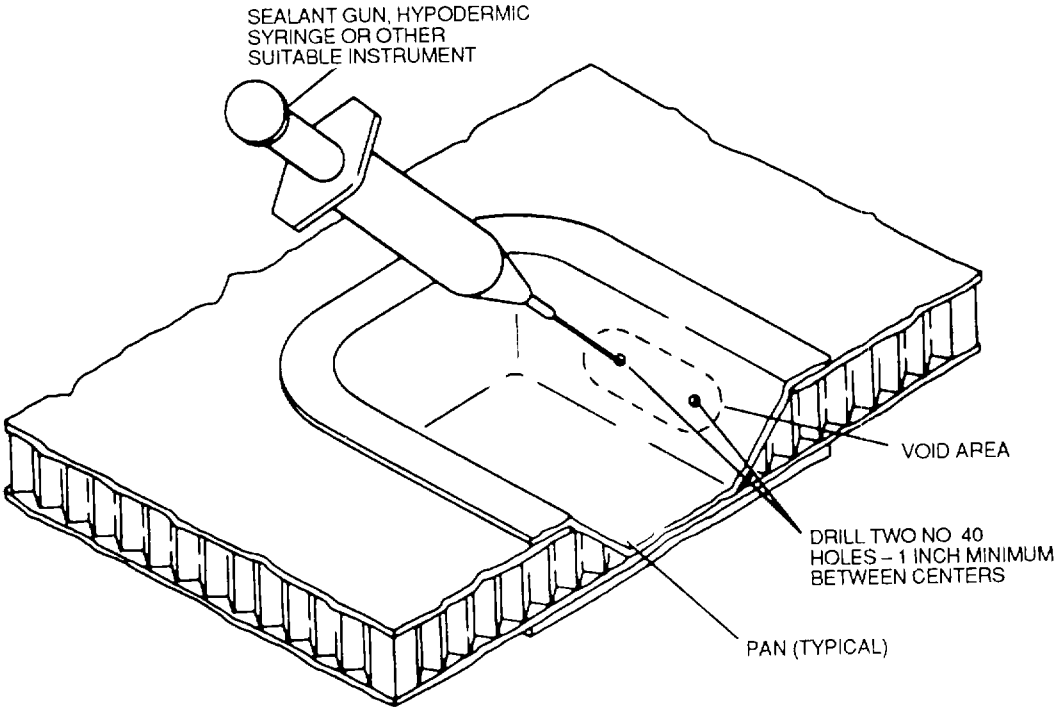

Figure 9-7. Repair of Pan Void

h. *Repair of Skm Doubler Voids.* Voids between skin and doubler or between doubler and core can be repaired by one of two methods, depending on the thickness of the core.

(1) Core thickness 0.255 inch or greater. When the core is 0.255 inch thick or greater, proceed as follows (see figure 9-8).

(a) Locate the center of the void and drill a 3/16-inch diameter hole through the skin and doubler.

(b) Using the 3/16-inch diameter hole for entrance, spoil the core as directed in paragraph 9-6g (figure 9-8, detail A).

(c) Drill 1/8-inch diameter holes through the skin and doubler in a pattern around the edge of the spoiled core. Maintain a minimum pitch of 5/8 inch and maximum of 1 inch between holes.

(d) Mix a batch of adhesive.

(e) Inject the adhesive between the skin and doubler, using a hypodermic syringe.

(f) Install rivets, MS20600AD4, through all but one of the 1/8 inch holes in the skin and doubler, and the center 3/16 inch hole.

(g) Mix a batch of adhesive.

(h) Use an air-driven caulking gun, 250-6 or equivalent, equipped with a nozzle smaller than 3/16-inch diameter. Fill the spoiled area with adhesive through one of the two open holes until the area is filled and the adhesive comes out the other hole (figure 9-8, detail B).

(i) While the adhesive is wet, install rivets, MS20600AD6 and AD4, in the remaining two holes (figure 9-8, detail C).

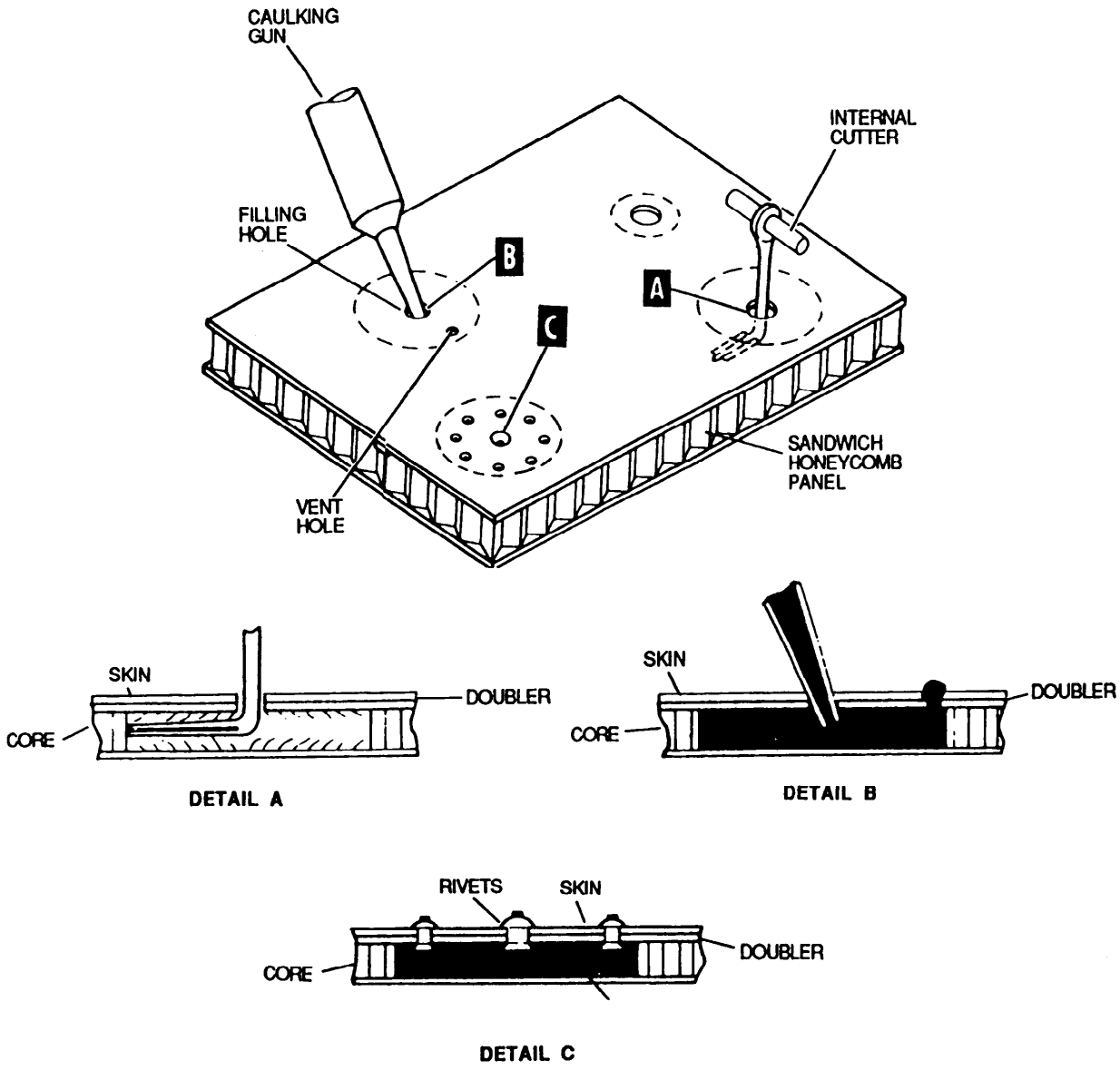

Figure 9-8. Skin Doubler Void Repair (0.255 inch or Greater)

(2) Core thickness less than 0.255 inch. When the core thickness is less than 0.255 inch, proceed as follows (see figure 9-9):

(a) Locate the center of the void and drill one 3/16-inch diameter hole and one 1/4-inch diameter hole on the opposite side of the panel.

(b) Using the 1/4-inch diameter hole for entrance, spoil the core. Refer to paragraph 9-6g (figure 9-9, detail A).

(c) Mix a batch of adhesive.

(d) Use an air-driven caulking gun, 250-6 or equivalent, equipped with a nozzle smaller than 1/8-inch diameter. Fill the spoiled core area with adhesive through one of the two holes until the core is filled and the adhesive comes out the other hole (figure 9-9, detail B).

(e) Allow the adhesive to harden, and sand the repair flush with skin.

(f) Drill 1/8-inch diameter holes through the skin, doubler, hardened adhesive, and the skin on the opposite side, in a pattern following the periphery of the spoiled core. Maintain a minimum pitch of 5/8-inch but not exceeding a maximum pitch of 1 inch between holes.

(g) Drill through the hardened adhesive and skin on the opposite side at the hole originally drilled through the skin and doubler in step (a). Use a 3/16-inch diameter drill.

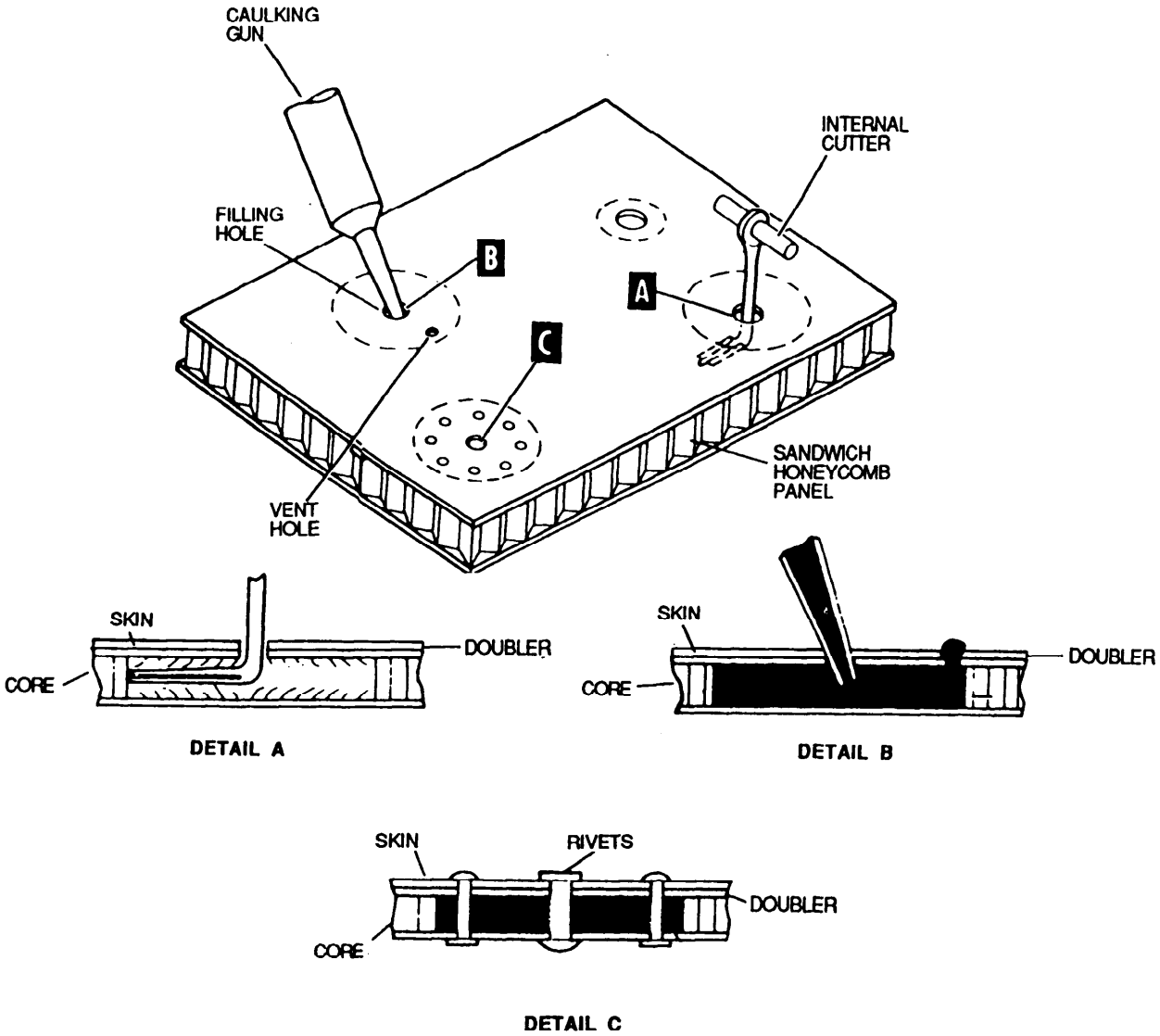

Figure 9-9. Skin Doubler Void Repair (Less Than 0.255 inch)

(h) Prepare a mixture of adhesive.

(i) Using a hypodermic syringe, inject the mixture between the skin and doubler.

(j) While the adhesive is wet, install rivets (MS20470AD4) in the holes drilled in step (f), and one rivet (MS20470AD6) in the center filling hole (figure 9-9, detail C).

i. Repair of Dents. Small dents in the surface skin can be filled as follows:

(1) Prepare the area by sanding it lightly with 400-grit wet or dry abrasive paper (P-P-101). Clean the area by wiping three or four separate times with cloths (CCC-C-46) moistened with technical acetone (O-A-51).

(2) Flush the area with water and inspect for breaks in the water film. If any breaks occur in the water film, repeat step (1).

NOTE

Refer to applicable aircraft system maintenance manual for specific instructions in selection and mixing of adhesive.

Refer to applicable aircraft maintenance manual for information on working life of filler.

(3) Apply the filler to the dent with a trowel.

(4) Follow Instructions in applicable aircraft maintenance manual for curing temperature and time filler.

(5) Allow the filler to cool. Blend the repair with the contour of the adjacent surfaces, using 400-grit wet or dry abrasive paper (P-P-121 and P-P-101).

(6) Refinish the area according to instructions in applicable aircraft system maintenance manual.

j *Repair of Small, Single-Skin Damage* Cracks not exceeding a length of 6 inches can be repaired as follows:

(1) Drill a 1/8-inch diameter hole at each end of the crack.

(2) Fabricate a circular or an oval skin reinforcement from the same type material as the original skin, but of the next heavier thickness The reinforcement should overlap the crack by a minimum of 3/4 inch.

(3) Bond the reinforcement to the skin with adhesive as directed in the applicable aircraft maintenance manual.

k *Repair of Small, Single-Skin Holes* Small holes through one skin can be repaired as follows;

(1) Cut out the damaged skin and core to form a circular or an oval hole.

(2) Cut the core back approximately 1/4 inch from the edge of the trimmed hole in the skin.

(3) Clean the core and the skin and fill the cavity with Corfil 615.

(4) Fabricate a skin reinforcement from the same type material as the original skin but of the next heavier thickness. The reinforcement should overlap the trimmed hole In the skin by 3/4 inch

(5) Bond the reinforcement to the skin with adhesive as directed in the applicable aircraft maintenance manual.

NOTE

If the skin has a rigidized pattern, a circular row of rivets, MS20600AD6, should be installed at a pitch of 0.687 inch, through the reinforcement and skin in addition, a fillet of Epon 6 adhesive should be provided at the edge of the reinforcement.

l. *Repair of Large, Single-Skin Damage.* Damages not exceeding an area of 6 square inches and spaced a minimum of 9 Inches apart can be repaired as follows

NOTE

Damages to pods are allowable up to 20 square inches provided 9 inches remain between damaged areas

(1) Cut out the damaged skin and core to form a circular or an oval hole.

(2) Fabricate a core replacement and skin replacement from the same type material as the original. For damaged pods, the core should be only one-half expanded (double density)

NOTE

If a doubler is in the area that has been damaged and cut out, a doubler replacement should also be fabricated.

(3) Bond the core replacement to the inner surface of the undamaged skin and to the existing core Then, bond the skin replacement to the core replacement, using adhesive as directed in the applicable aircraft maintenance manual.

(4) Fabricate a skin reinforcement from the same type material as the original, but of the next heavier thickness. The reinforcement should overlap the damage cutout by 3/4 inch.

(5) Bond the reinforcement to skin with adhesive as directed in the applicable aircraft maintenance manual.

(6) Install a row of rivets, MS20600AD6, around the damaged cutout, at a pitch of 11/16 inch, through the reinforcement and skin.

m *Repair of Double-Skin Damage.* Damage not exceeding 6 square inches in either skin after trimming can be repaired. A minimum of 9 inches of skin must remain between edges of damaged areas after trimming. This damage can be repaired with either a flush or non-flush surface.

(1) Flush repair if a flush patch is required in one skin, the 6-square-inch repair limit applies to the skin with the non-flush patch See figure 9-10 and repair as follows.

(a) Cut out damaged skins and core to form a circular or oval hole.

NOTE

The skin on the non-flush surface and core must be cut to a diameter 1-1/2 inches larger than skin on flush surface.

(b) Make skin replacements from same type material as original.

(c) Make core replacement from same type material as original. Trim core replacement to allow for thickness of skin reinforcement of flush surface

(d) Make skin reinforcements of same material as original. The diameter of the reinforcements must overlap respective skin cutouts by 3/4 inch.

(e) For the flush surface, bond skin replacement and skin reinforcement together with adhesive as directed in the applicable aircraft maintenance manual.

(f) For the non-flush surface, bond skin replacement, skin reinforcement, and core replacement together with adhesive as directed In the applicable aircraft maintenance manual

(g) Install assembly, bonded in step *(e)*, and Install rivets MS20600AD6 at a minimum pitch of 11/16 inch

(h) Install assembly, bonded in step *(f)*, and Install rivets MS20600AD6 at a minimum pitch of 11/16 Inch

(2) Non-flush repair. Damage through both skins when flush surfaces are not required can be repaired as outlined in paragraph *(1)*, except both skins will have the reinforcing patch on the exterior of skin Rivets MS20600AD6 will be used, and the core replacement will have the same thickness as original (see figure 9-11).

n *Repair of Scotchply Edge Member and Corfil Edge Filler Damage*. Damage which affects each skin and the core, and where a flush surface is not required, can be repaired as follows:

(1) Cut out the damaged skins and core to form a circular or oval hole.

(2) Make the core replacement and the skin replacements from the same material as the original.

(3) Make the skin reinforcements from the same material as original, but of the next heavier thickness. The diameter of the reinforcements must overlap the skin cutout 3/4 inch,

(4) Bond the skin replacements and the core to one of the skin reinforcements using adhesive as directed in the applicable aircraft maintenance manual.

(5) Install the bonded assembly in the damaged cutout.

(6) Install the other skin reinforcement and install the rivets (MS20600AD6) at a minimum pitch of 11/16 inch.

o *Repair of Honeycomb Panel Edges Voids*. In the surface edge members can be repaired by injecting Epon 828 with a hypodermic syringe, in the void through a gap along the edge of the member Cracks and similar damage can be repaired as follows:

(1) Scarf each existing ply (layer) ½ inch, as shown In figure 9-12, using wet or dry abrasive paper (P-P-121 and P-P-101).

(2) Fill the exposed core with Corfil 615.

(3) Cut patches from glass cloth, No 150 (MIL-C-9084), equal to the number of existing piles, so that each successive ply overlaps the preceding ply by ½ inch.

(4) Impregnate each patch with adhesive as directed in the applicable aircraft maintenance manual.

(5) Place largest patch on a sheet of Teflon (MIL-P-22241) and place successively smaller patches, while wet, on the largest patch.

(6) Apply a final brush coat of adhesive, as directed in the applicable aircraft maintenance manual, to assembled patches, and place the assembly with Teflon sheet on the scarfed area.

p. *Bonded Former Assemblies* Figures 9-13 and 9-14 show typical repairs of bonded formers.

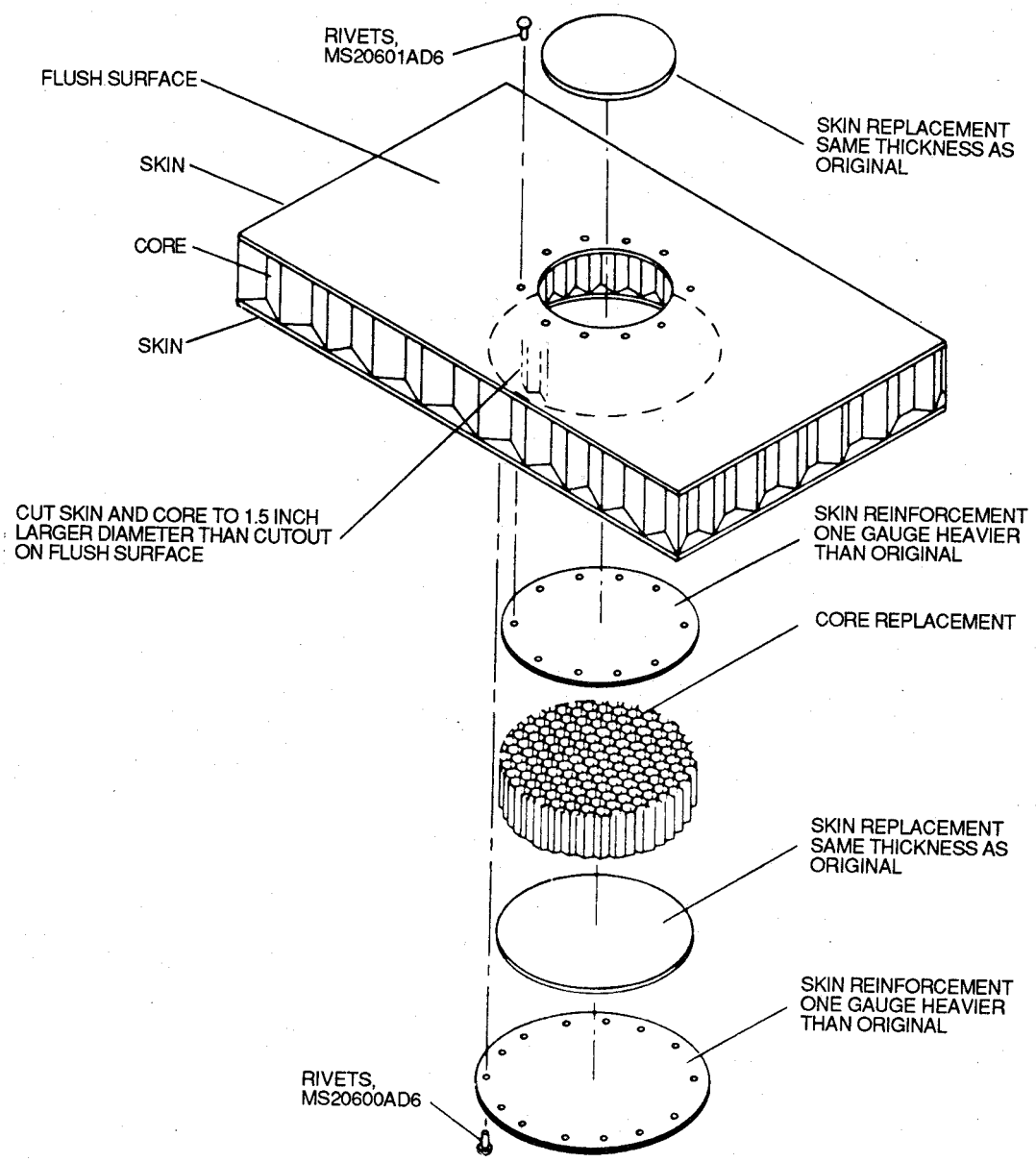

Figure 9-10. Double Skin Repair (Flush)

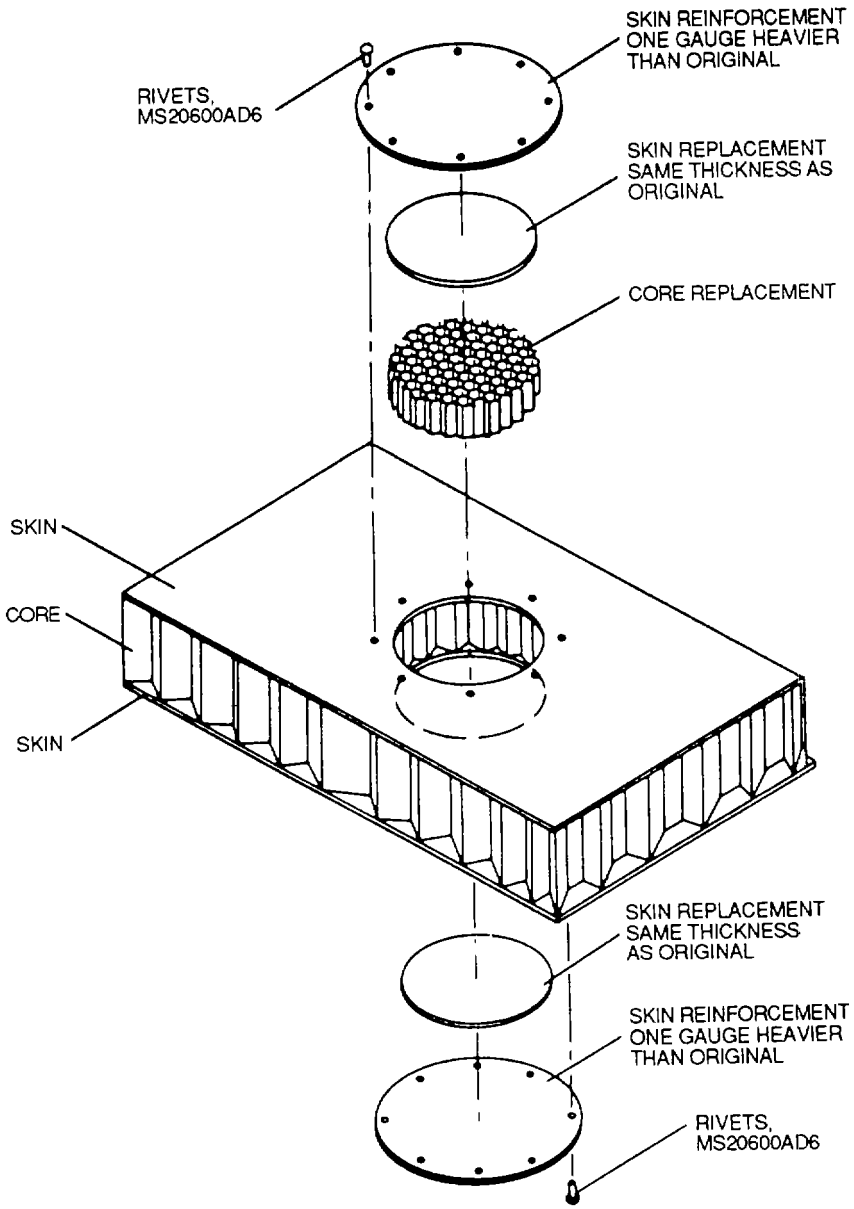

Figure 9-11. Double Skin Repair (Nonflush)

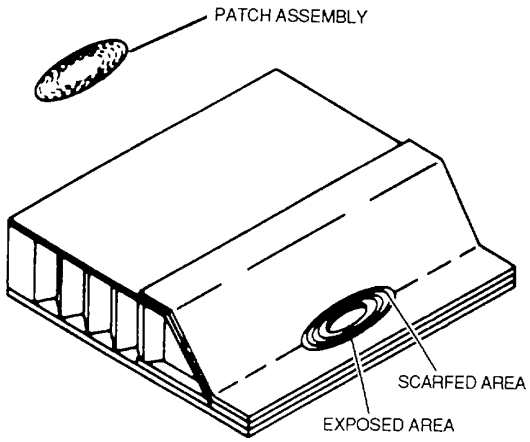

Figure 9-12. Repair of Honeycomb Panel Edge

q. Quality/Assurance for Repair. To check a finished repair for soundness, perform the coin-tapping inspection described in paragraph 9-5a.

9-7. Repair of Impregnated Glass Cloth Parts

Laminated glass cloth construction is used for many panels where a further decrease of weight is desirable. Generally speaking, it is repaired by adding further laminations of glass cloth as a patch, instead of aluminum sheet.

a Classification of Damage The following paragraphs describe the usual types of damage found in this type of construction.

(1) Small crack damage Small-crack damage is damage caused by flexing and resulting in a tear less than 2 inches long, in which the edges of the tear remain closed and the tear does not extend through all laminations.

(2) Large-crack damage. Large-crack damage is similar to small-crack damage, except that two or more small cracks are close to each other. The cracks are longer than 2 inches, or they extend completely through all laminations.

(3) Perforation damage. Perforation damage is damage caused by a penetration of all laminations, causing ragged or jutting edges on either side

(4) Lack-of-material damage. Lack-of-material damage is damage caused by partial loss of material on any surface of the part.

(5) Loss-of-material damage. Loss-of-material damage is damage caused by a partial or complete loss of all laminations, either on an edge or surface of the part.

(6) Miscellaneous damage. Miscellaneous damage is damage caused by a separation of laminations such as bubbles, blisters, and failure of bonding agents.

b Damage Repair. The following procedures are typical of those used in the repair of damages. However, they are not to be construed as the only procedure that could be used The specific aircraft technical manual should be consulted and followed in all situations.

(1) Small crack repair. To repair small cracks less than 2 inches long, proceed as follows:

(a) Stop-drill the crack at each end.

(b) Sand through the crack to an uncracked lamination.

(c) Roughen, by sanding, the areas which will be covered by patches.

(d) Clean the area with technical acetone O-A-51, to remove sanding residue.

(e) Cut a piece of glass cloth (MIL-C-9084) or recommended material from the specific technical manual large enough to extend at least 0.5 inch beyond shaded area. If the base material is unknown, use the instructions from the applicable aircraft maintenance manual. Bonding agents typically have a short shelf life. Consequently, advanced maintenance planning is necessary to assure the bonding agent is serviceable for the needed repair.

- Class 1 - Polyester Laminates, Use Resin MIL-R-7575
- Class 2 - Epoxy Laminates, Use Resin MIL-R-9300
- Class 3 - Silicone Laminates, Use Resin MIL-R-25506
- Class 4 - Phenolic Laminates, Use Resin MIL-R-9299

(f) Cut a number of pieces of cloth large enough to extend at least 1/2 inch beyond previous piece, and equal to the same number of pieces shaded away.

(g) Due to the variety of composite materials, bonding materials, and bonding agents, mix the bonding agent as prescribed In the applicable aircraft technical manual or instructions contained in the repair kit.

(h) Impregnate each prepared piece of glass cloth by brushing the bonding agent into the cloth.

(i) Patch damage as follows (see figure 9-16).

1 Place the smallest piece of impregnated cloth over the area where laminates were removed.

2 Place successively larger pieces of impregnated cloth over the area.

3 Place a piece of commercial grade sheet cellophane, L-C-110, over the doublers and patches, and press it in place while continually smoothing it to remove air pockets.

NOTE

If the doublers or patches will not remain in place, apply masking tape, PPP-T-42, across the cellophane

4 Remove the cellophane if the doublers and patches remain in place, and brush a coat of bonding agent over the doublers.

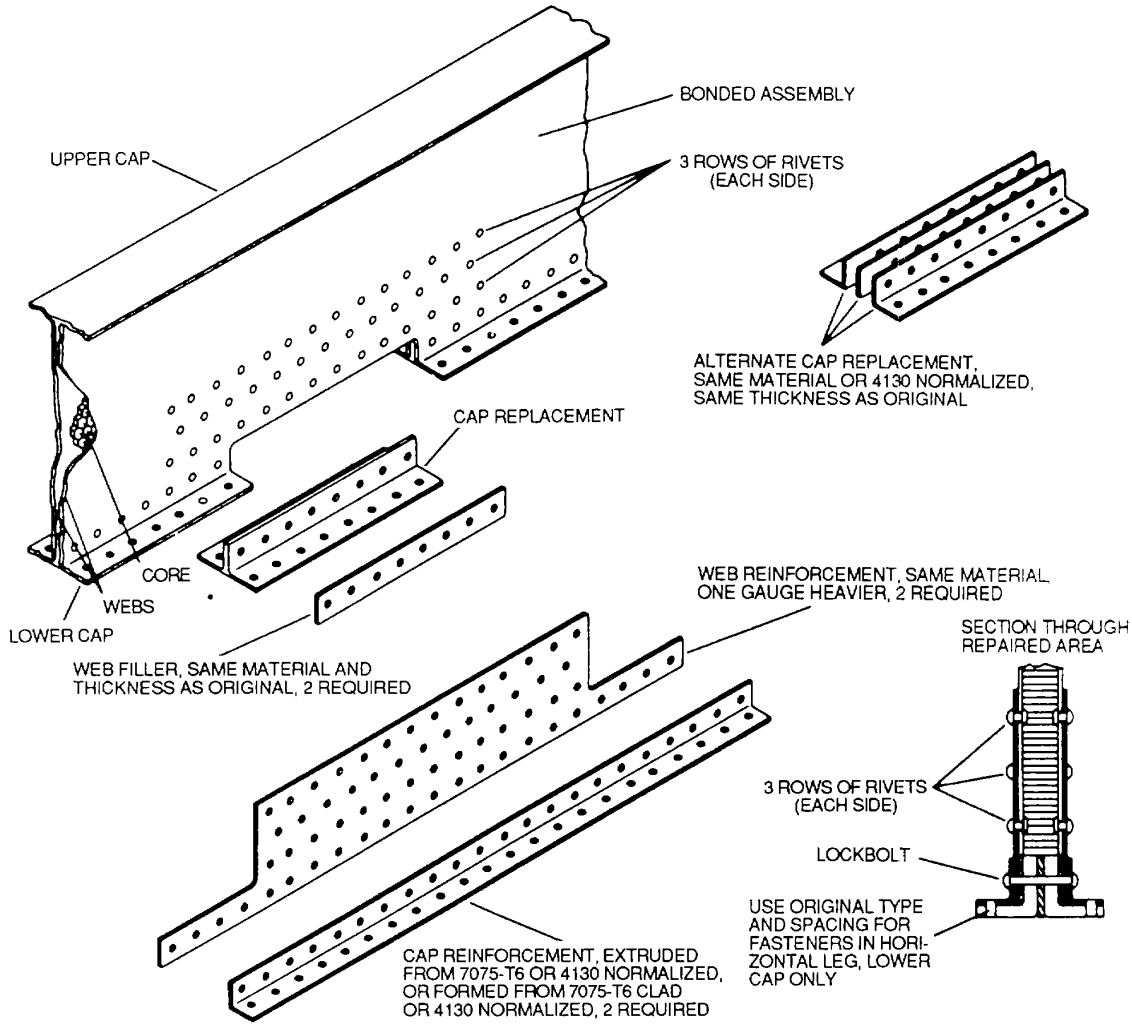

Figure 9-13. Bonded Former Repair (Cap)

NOTE

If the cellophane is not removed, additional coats of bonding agent are not required.

5 Cure the patch with heat lamps until it is hard and tack-free.

(2) Large crack repair. Repair this type of damage as follows:

(a) Cut the impregnated cloth laminates away to form a hole having a 15 to 30 degree edge taper.

(b) Roughen, by sanding, the area which will be covered by patches.

(c) Clean the area with technical acetone O-A-51 to remove sanding residue.

(d) Cut a piece of glass cloth (MIL-C-9084) or recommended material from the specific technical manual the same diameter as the hole, equal to the number of laminates in the damaged part. If the base material is unknown, use the instructions from the applicable aircraft maintenance manual. Bonding agents typically have a short shelf life. Consequently, advanced maintenance planning Is necessary to assure the bonding agent is serviceable for the needed repair.

- Class 1 - Polyester Laminates, Use Resin MIL-R-7575

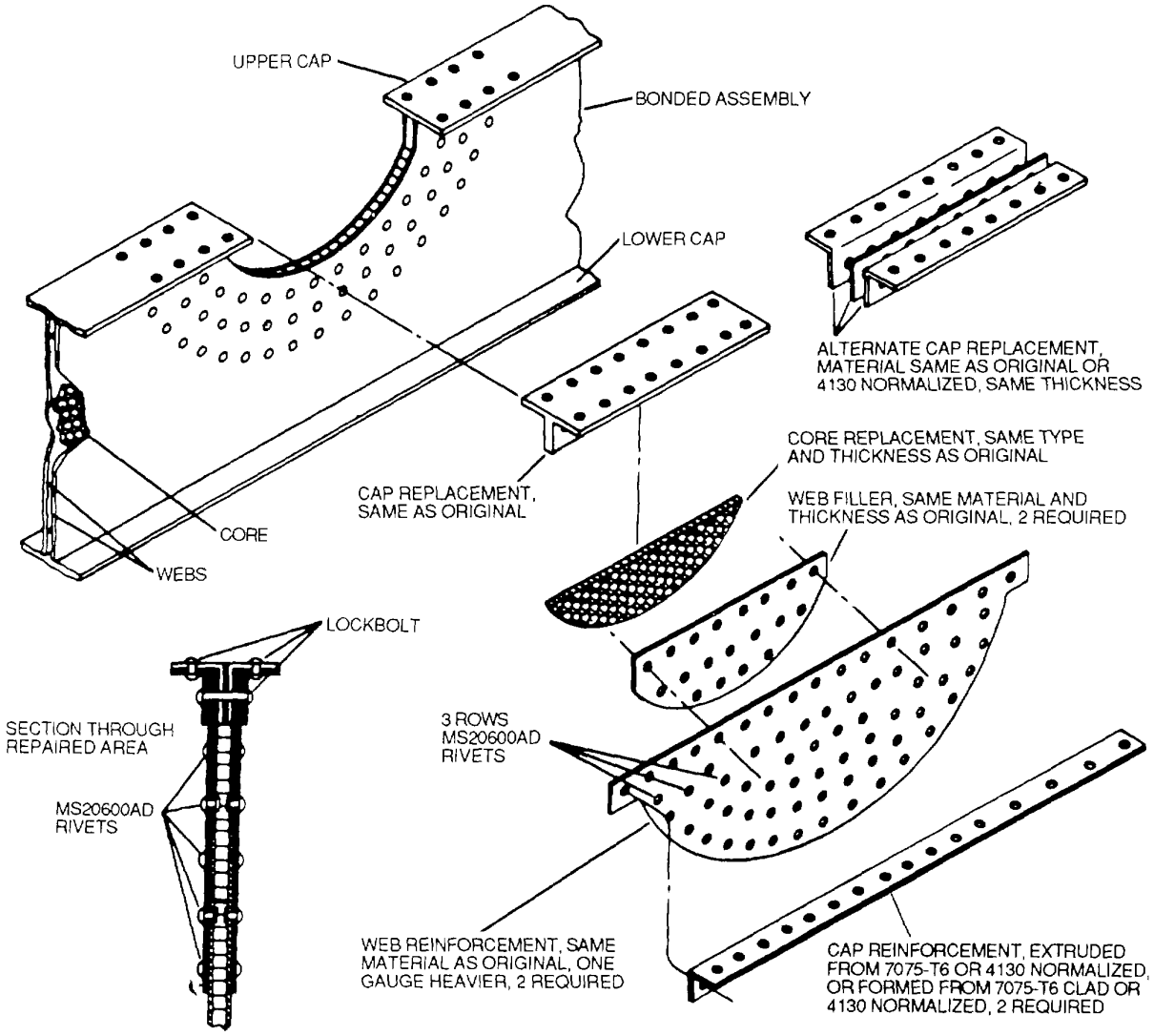

Figure 9-14. Bonded Former Repair (Web)

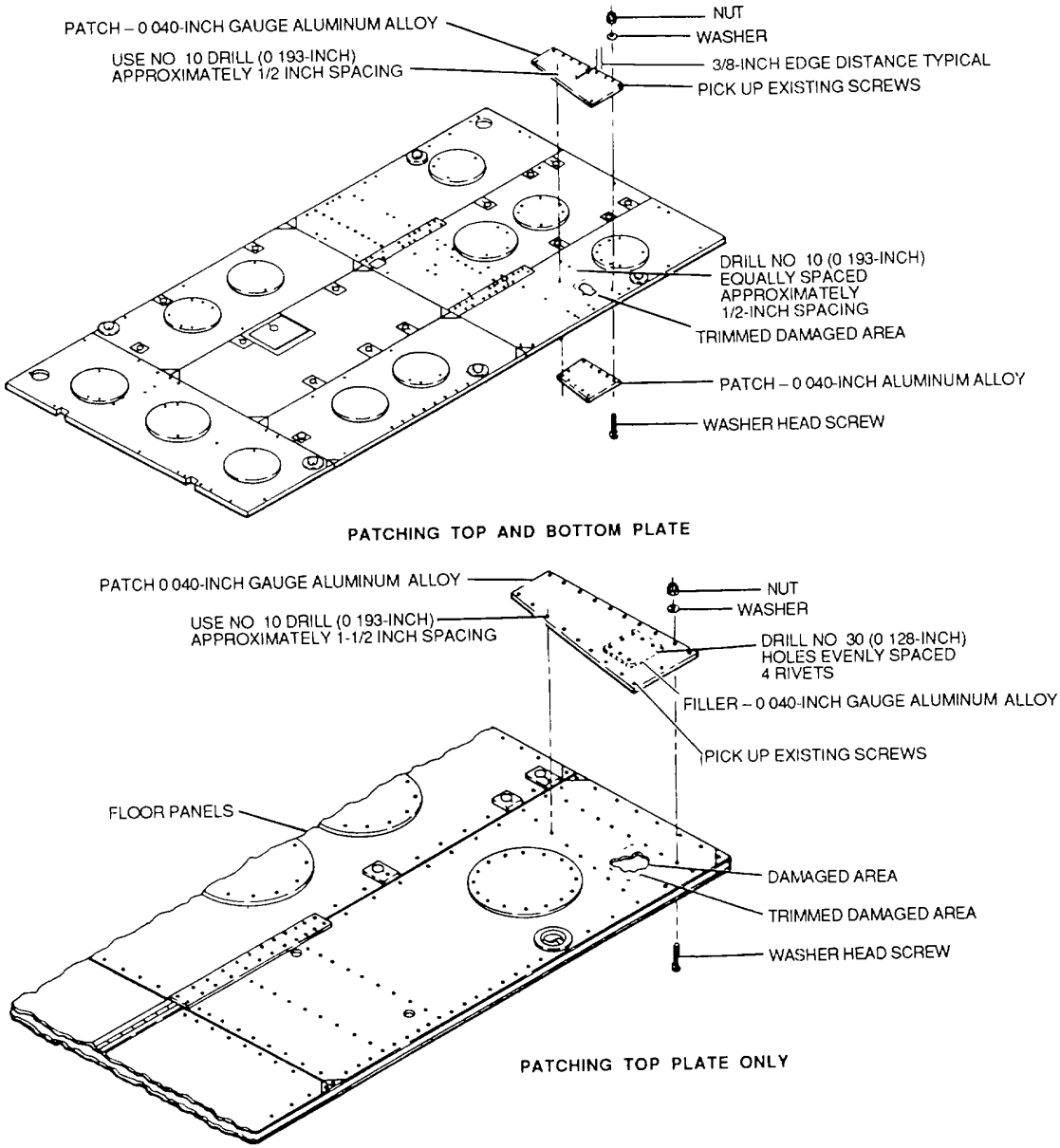

Figure 9-15. Repair of Metal-Covered Wooden Floor Panels

- Class 2 - Epoxy Laminates, Use Resin MIL-R-9300
- Class 3 - Silicone Laminates, Use Resin MIL-R-25506
- Class 4 - Phenolic Laminates, Use Resin MIL-R-9299

(e) Cut a number of doublers from cloth equal to the number of laminates. Cut the first doubler to at least 1 inch larger in diameter than the patches. Cut succeeding doublers to overlap the initial doubler by at least ½ inch.

(f) Using masking tape,PPP-T-42, attach a suitable support covered with commercial grade sheet cellophane, L-C-110, behind the hole.

(g) Mix sufficient bonding agent to complete repair.

(h) Impregnate each patch and each doubler by brushing the bonding agent into the cloth.

(i) Patch damage as follows (see figure 9-17).

1 Place impregnated patches in the hole and against the support.

2 Place impregnated doublers over patches starting with smallest doubler. Center the doublers over each other and over the patches.

3 Place a piece of commercial grade sheet cellophane, L-C-110, over the doublers and patches, and press it in place while continually smoothing it to remove air pockets.

NOTE

If the doublers or patches will not remain in place, apply masking tape, PPP-T-42, across the cellophane.

4 Remove the cellophane if the doublers and patches remain in place, and brush a coat of bonding agent over the doublers.

NOTE

If the cellophane is not removed, additional coats of bonding agent are not required.

(3) Perforation repair. Repair this type of damage in accordance with paragraph *(2)*.

(4) Lack-of-material damage repair. See figure 9-18 and paragraph *(1)* for this type of repair.

(5) Loss-of-maternal damage repair. Follow the procedure outlined in paragraph *(2)* for this defect.

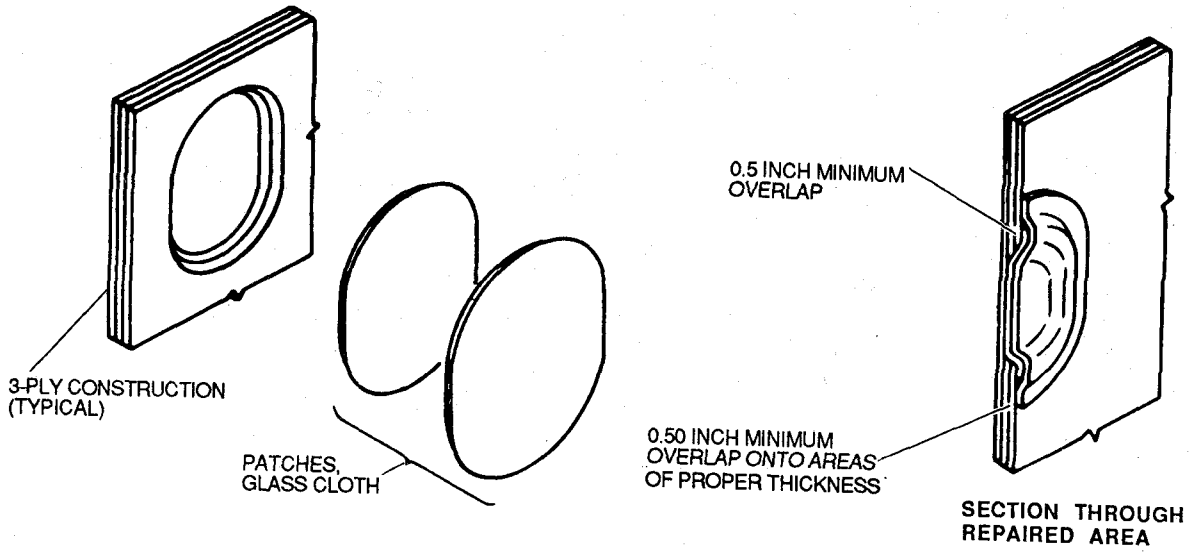

Figure 9-16. Glass Cloth Repair of Small Crack

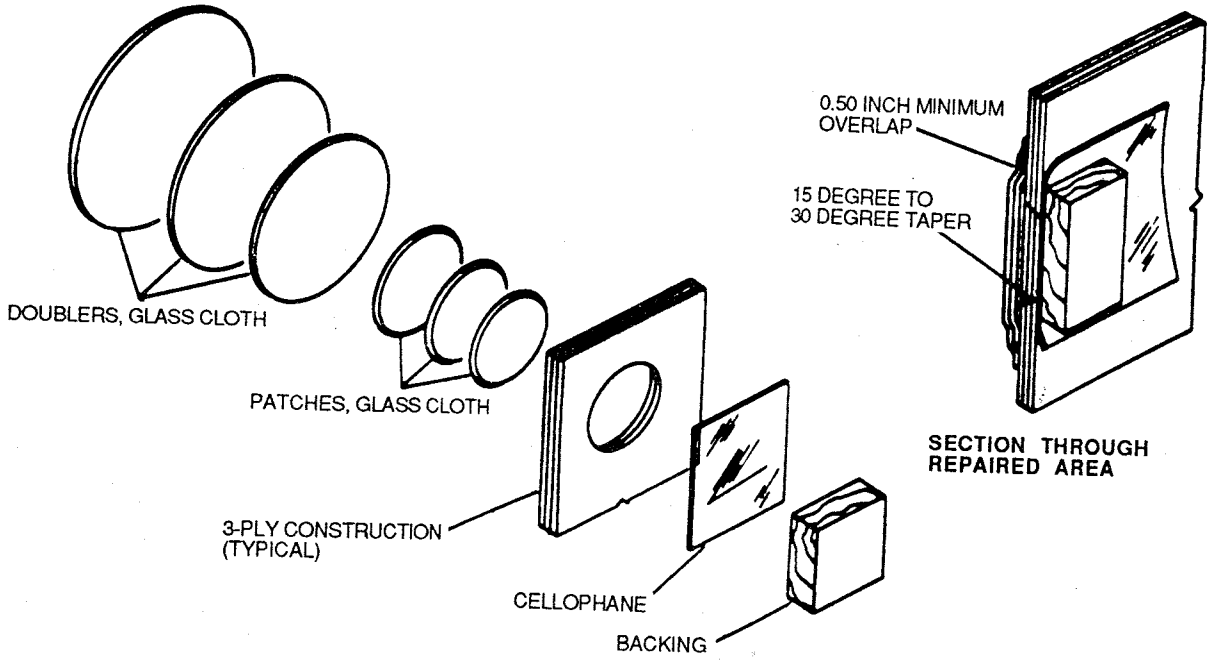

Figure 9-17. Glass Cloth Repair of Large Crack or Perforation

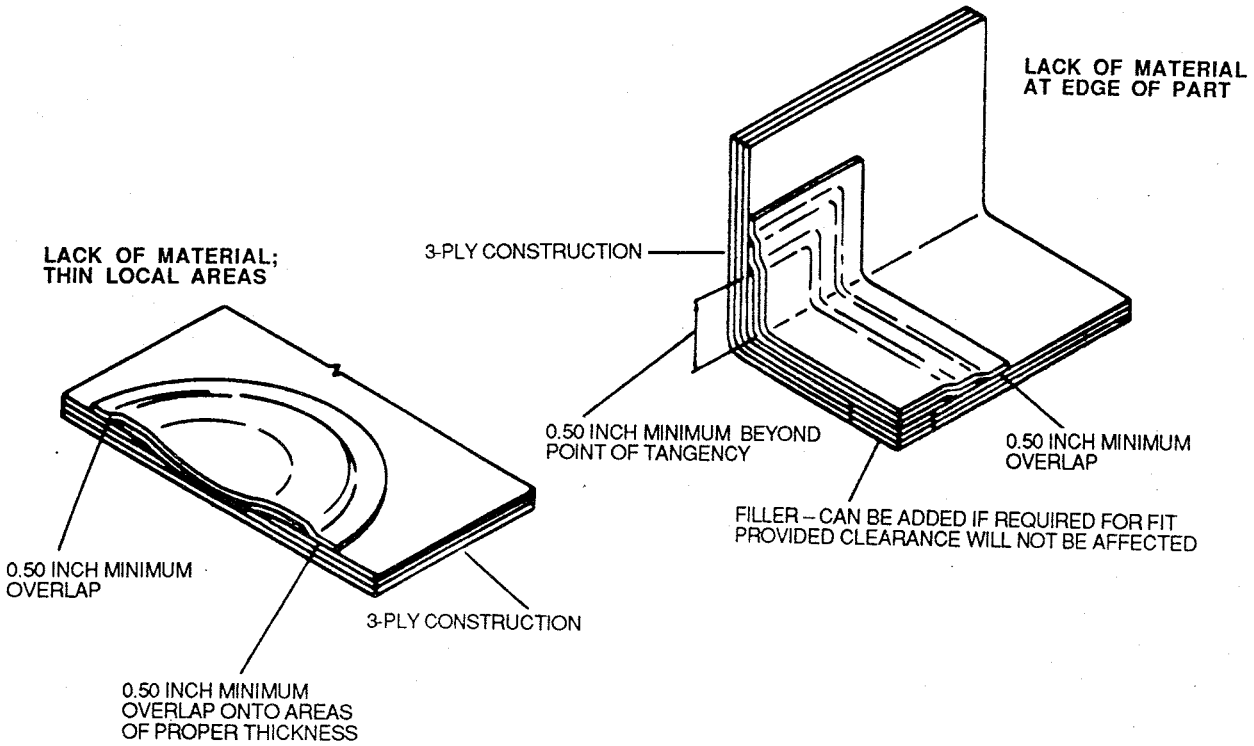

Figure 9-18. Glass Cloth Repair of Lack-of-Material Damage

(6) Miscellaneous damage repair. Repair procedures outlined in paragraph *(1)* or *(2)* may be used, depending upon the extent of the damage

9-8. Fiber Laminate Material Repair. This type of material is primarily used in aircraft radomes, although it may be used in other locations The repairs outlined herein may be accomplished by intermediate level maintenance activities. . All other repairs shall be accomplished at depot maintenance facilities.

a. General Repair Requirements. Following are specific requirements which affect all repair methods for this type of construction.

(1) Repair guidelines. Repair procedures are developed with the objective of equaling, as nearly as possible, the electrical and strength properties of the original part with a minimum of increase in weight. This can only be accomplished by repairing damaged parts with approved materials and working techniques In order to eliminate dangerous stress concentration, abrupt changes in cross sectional areas should be avoided by tapering joints, by making small patches round or oval shaped instead of rectangular, and by rounding the corners of all repairs. Smoothness of the outside surface of aircraft is a necessity for proper performance and consequently patches that project above the original surface shall be avoided. Uniformity in thickness of core, facings, and density and cell size of core are exceedingly important. Repairs of punctured facings, delaminations, oil contamination, and fractured cores in all areas necessitate removal of all damaged material, followed by its replacement with an approved type of material in the same thickness as the original to obtain a void-free laminate or face ply. Repaired area will be carefully inspected for uniform thickness, void-freeness, smoothness, and overall good workmanship The structural bonding quality of the repair will be determined by physical testing.

(2) Physical testing. Physical testing for structural bonding quality is not required for class I repair certification. Quality of class I repair can be determined by visual inspection and compliance with Barcol hardness test. Physical tests will be accomplished in accordance with MIL-STD-401 and MIL-S-9041, when applicable to aircraft. The actual resin content of the finished repair may be determined using the procedures outlined in Federal Specification L-P-383. If other testing is desired, the above mentioned specification may be referred to for additional testing information.

b Materials Used In Repair. The repair of any sandwich type laminate material requires the use of approved materials for repairing the damaged portion of the fiber laminate. Duplication of original materials, or authorized substitutes, as specified on the latest drawing or specification of the plastic part, is recommended in all instances.

c Classes of Repair For convenience in presentation, and for clarity in designating repair procedures to be used, damages to sandwich type laminate materials parts are divided into group or classes according to severity and possible affect upon aircraft structure. The following classes are used in presentation of repair techniques:

(1) Class I repair. Figure 9-19 shows a typical class I defect. This defect involves scars, scratches, dents or erosion affecting the outer ply only

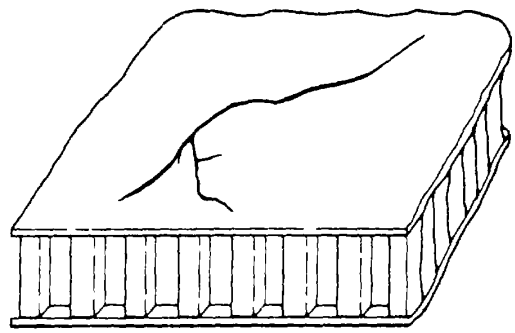

Figure 9-19. Class I Damage

(2) Class II repair. A class II defect has punctures, delaminations, contaminations, or fractures in one facing only, possibly accompanied by damage to the core, but without damage to the opposite facing Figure 9-20 shows this type of defect.

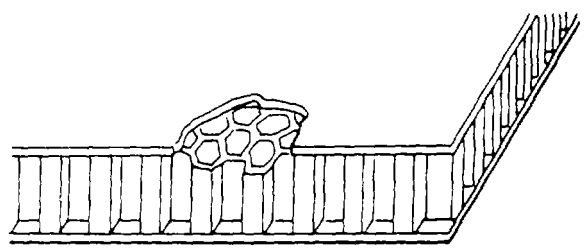

Figure 9-20. Class II Damage

(3) Class III repair. Damage extending completely through a sandwich-type laminate material affecting both facings and core denotes a class III defect, as shown In figure 9-21.

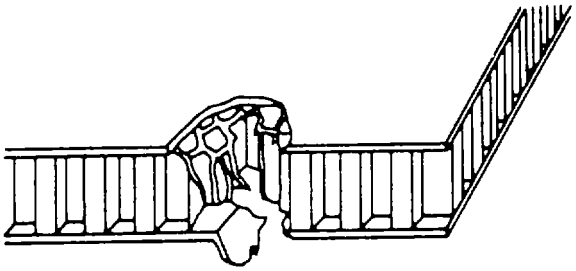

Figure 9-21 Class III Damage.

d General Principles of Materials and Repair Procedures. The repair instructions contained in these paragraphs are given for aircraft radomes. These repair procedures can be applied to other aircraft fiber laminated components.

(1) Use of resins. The specific technical manual should be consulted for type of resins used to repair radomes. Radomes fabricated from polyester type resins may be prepared with either class I or class II of any approved polyester resin unless the radome detail specification specified the use of another class. These resins can be made to cure at different temperature by adjusting the amount and type of catalyst. Polymerization of resin mixture is affected by ambient temperature and humidity, therefore, resin mix formulations will vary from one locality to another and may require adjustments from day to day or hour to hour for best working results. Epoxy resins conforming to MIL-R-9300 will be used for repairs to radomes that used this type resin in the original fabrication of the radome. Basic resin mix formulations will be as described in the resin manufacturer's process specification, in which case, the latter will have precedence.

(2) Safety precautions. In working with resins, catalysts, promoters, and solvents such as acetone (necessary to clean equipment), local safety regulations pertaining to fire and health hazards must be complied with. The resins should be stored in a closed metal container in a cool place such as a refrigerator at approximately 40°F(5°C). Catalysts, promoters, and solvents are very reactive and should be stored in the original tight containers isolated from one another in a cool place.

e Blanket and Seals. When accomplishing repairs, it is necessary to apply a uniformly distributed pressure to ensure contact. This is best accomplished by using a thin impervious blanket of Polyvinyl Alcohol (PVA), vinylite, or colored cellophane. The first two materials can be stretched and made to conform to surfaces of a compound curvature whereas the last cannot. The seal around the edge of blankets can be provided by using pressure sensitive cellophane tape or a thin strip of a soft sealing compound such as zinc chromate putty or tape. The sealing compound is most practical if the edges of the blanket are likely to be wrinkled. Zinc chromate putty, MIL-P-8116, can be removed and reused.

f Parting Films and Compounds. When it is necessary to use a mold to rebuild a portion of a plastic sandwich-type laminate material, the surface of the mold must be treated in some manner to prevent adhesion of the resin.

(1) Compound curvature. If the mold surface is of a compound curvature, several coatings of one of the following parting compounds give good results: cellulose acetate lacquer and silicone grease, M IL-S-8660, or Dow Corning DC 4 or equivalent. On the convex side of compound curved molds, a Polyvinyl Alcohol (PVA) or vinylite parting film can often be stretched wrinkle-free.

(2) Single curvature. On molds of single curvature, cellophane, Federal Specification L-C-110, works very well, however, DuPont deNemours cellophane parting agent, type 600PC, 600PT, or equivalent is recommended.

g General Repair Consideration. The following general practices will be followed during repair of radomes.

(1) Accessibility of repair area. Radomes are usually removed from the aircraft for repairing or, if not, are accessible from both sides to a certain degree. The repair considerations outlined in these paragraphs for radomes are based on the presumption that both sides of the sandwich-type laminate radome are accessible. Before repair operations, the identifying data stenciled on the radome inner surface shall be recorded so that it can be restenciled on the radome after repair has been completed.

(2) Serial number. Radomes will retain the serial number provided by the manufacturer. However, when radomes have not been previously serialized, or if the serial number is unreadable, they will be assigned a serial number by depot level repair activity.

(3) Stenciling. Stenciling shall be as close as possible to attaching edge, and shall be in 1/2 to 1-inch letters using cellulose nitrate lacquer, instrument black, Federal Specification TT-L-32. One-half inch size lettering is recommended for small radomes and 1-inch lettering for large radomes

h *Repair Procedures.* The following paragraphs describe procedures for preparing radomes for repair.

(1) Radome removal. Radomes shall be removed from aircraft prior to cleaning and preparing the part for major repair. Repair to erosion resistant coatings and class I damage may be accomplished without removing the part from the aircraft if removal of the part is not practical and if precautions are taken to prevent the part from becoming contaminated during the repair process.

(2) Cleaning. The area to be repaired and approximately 4 inches adjacent will be first carefully wiped with a clean cloth saturated with methyl ethyl ketone, Federal Specification TT-M-261, or other approved cleaning agent This does not apply to sandwich-type laminate material having foamed-in-place core.

NOTE

Do not use methyl ethyl ketone, Federal Specification TT-M-261, on sandwich-type laminate materials with core material conforming to MIL-C-8087. Clean surfaces using a clean dry, lint-free cloth.

(3) Paint removal. If paint has been applied to a radome, it will be removed by sanding, or if equipment is available, by light seed blasting. The sandwich-type laminate material using foamed-in-place core will be wiped free of grit with a clean cloth.

NOTE

Extreme care will be taken during sanding operation to avoid further damage to the plastic facings of the sandwich-type laminate construction. If seed blasting Is used, caution will be taken not to abrade the surface excessively and to remove all loose grit or other foreign matter.

(4) Moisture detection. Accomplish moisture detection and removal procedures on all radomes prior to accomplishing class II and class III repairs. Moisture and other contamination seriously affect the electrical properties of a radome, therefore, cleaning and drying procedures must be accomplished prior to electrical testing and repairing.

(5) Electrical test. Radomes may require repair other than to obvious physical damage because poor electrical quality cannot be detected by visual means Radomes that have a history of poor electrical quality or show evidence of extensive field repair should be electrically tested prior to repair in an overhaul shop. The objective of the pretest is to determine the electrical condition of the radome prior to repair Electrical test personnel shall outline, with a grease pencil, all areas of a radome that do not pass electrical test Areas outlined will be replaced; therefore, extreme care shall be taken to pinpoint failed areas as closely as possible Markings placed on radomes by test personnel shall not be removed until repair operation is begun. Radomes to be pretested shall be dry and clean, and shall have the erosion resistant coating removed.

(6) Resin substitution. Where drawings or specifications prescribe Type I, II, or Ill of MIL-R-7575, the following resins may be substituted:

IN LIEU OF	SUBSTITUTES (GRADE A OR B)
Type I	Class 0, 1, 2, 3, or 4
Type II	Class 1, 2, 3, or 4
Type III	Class 1 or 2

The following non-table contains applicable class descriptions:

CLASS	DESCRIPTION
1	Polyester Laminates, Use Resin MIL-R-7575
2	Epoxy Laminates, Use Resin MIL-R-9300
3	Silicone Laminates, Use Resin MIL-R-25506
4	Phenolic Laminates, Use Resin MIL-R-9299

i *Class I. Repair* Scars, scratches, surface abrasion, or minor rain erosion not penetrating through facing shall be repaired as follows:

(1) Clean injured area thoroughly and carefully using a clean cloth saturated with methyl ethyl ketone, Federal Specification TT-M-261, or other approved cleaning agent.

(2) Lightly sand damaged area, using 280 grit sandpaper. Clean sanded surface thoroughly using methyl ethyl ketone, Federal Specification TT-M-261. Moisture and solvents should be completely removed to prevent their inhibiting cure of resin.

WARNING

Never mix catalyst and promoter together, as they are explosively reactive as a mixture. Always mix the promoter with the resin first and then add catalyst to the mixture. Do not inhale the fumes during mixing. Do not store catalyzed resin in an airtight container or an unvented refrigerator. Catalyze only enough resin for immediate use.

(3) Apply one or two coats (depending on severity of abrasion) of polyester resin, MIL-R-7575, Type ill, to abraded surfaces

(4) Over this coated surface, apply a sheet of colored cellophane, Federal Specification L-C-110, or polyvinyl alcohol (PVA) film extending 2 or 3 inches beyond surface. Cellophane or polyvinyl alcohol film prevents exposure to air, and will provide a smooth surface so resin may cure.

(5) Tape cellophane, a polyvinyl alcohol (PVA), or a vinylite parting film in place and work out all air bubbles and excessive resin with hand or a rubber squeegee Subject resin coated surfaces to curing temperatures as specified by the applicable specification for the type of resin being used.

(6) After resin has cured or set, remove cellophane from cured resin and remove any excessive resin by wet-sanding.

j *Class II Repair.* Damages extending through two piles of the plastic facing or completely through one facing of the radome and possibly into the core will require removal of that portion of damaged facings and core, and replacement with approved materials in such a manner that normal stress can be carried over the area The preferred method of removing damaged face plies in accomplishing a Class II repair is by the stepped joint method. For small damages, the scarf method of repair may be used.

(1) Stepped joint method of removing damaged face piles. Repair as follows:

(a) Ascertain extent of damaged area by inspection prior to beginning repair. Use a light source to identify damaged portion by comparing dissimilar appearance to that of surrounding portion of radome, or tap radome lightly with a blunt instrument and listen for dull or dead sound indicating damaged area or clear metallic sound indicating uninjured area. Remove coating prior to Inspection for defects

(b) With the aid of a straightedge or compass, outline damaged area by scribing a rectangle or a square with rounded corners, or a circle that will necessitate removal of a minimum amount of sound material.

(c) Extend sides of rectangle, square, or circle a distance in inches equal to number of piles to be removed less 1 inch (5 inches if six piles are to be removed, 4 inches if five piles are to be removed, etc).

(d) Cut so that overlap is at least 1 inch per ply of glass cloth In case of core damage, allow a minimum of ½ inch between edge of innermost ply and periphery of core material to be removed.

(e) Remove rain erosion or other coating from an area larger than cut out area by 2 inches on all sides.

NOTE

If layer of glass cloth underneath is cut or scratched, the strength of repair will be lessened.

(f) Cut along lines scribed in outermost ply, as shown in figure 9-22, using a sharp knife or other specially prepared cutter and a straightedge Use extreme care not to cut or score underlying ply. Cut through overlaying ply in a series of cuts rather than attempt to cut through ply in one cut.

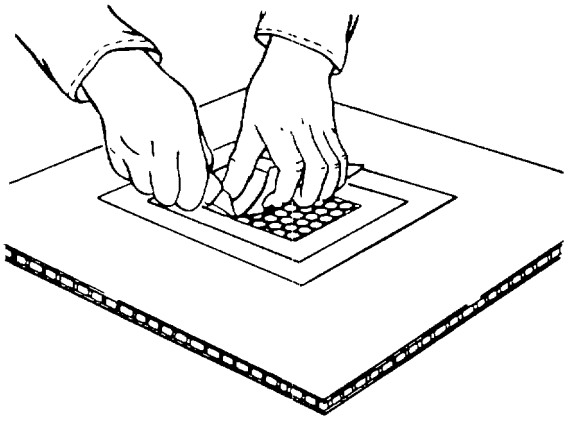

Figure 9-22. Removing Damaged Face Plies Using Step Joint Method

(g) Remove cutout from outermost ply by inserting a knife blade under one corner and carefully prying loose. When this outermost ply is removed, scribe on next exposed ply a similar outline except reducing dimensions 1 inch in all directions. (Overlaps will be 1 inch for each ply). Repeat this procedure until all damaged plies have been removed.

WARNING

The sanding operation on glass cloth-reinforced laminates gives off a fine dust that may cause skin irritations. Breathing of an excessive amount of this dust may be injurious, therefore, precautions as to skin and respiration protection shall be observed.

NOTE

Do not use methyl ethyl ketone on sandwich-type laminate materials with core material conforming to MIL-C-8087 (foam core). Clean surfaces with dry, lint-free cloth only.

(h) Sand exposed plies lightly, and clean surfaces using methyl ethyl ketone, Federal Specification TT-M-261, and allow to dry thoroughly preparatory to completing repair buildup.

WARNING

Never mix catalyst and promoter together, as they are explosively reactive as a mixture. Always mix the promoter with the resin first and then add catalyst to the mixture. Do not inhale the fumes during mixing. Do not store catalyzed resin in an airtight container or an unvented refrigerator. Catalyze only enough resin for immediate use.

(i) Prepare glass cloth patches by impregnating cloth patches with catalyzed resin and inserting individual patch ply between two sheets of colored cellophane, Federal Specification L-C-110. Cut cellophane sheets larger than patch by at least 2 inches on all sides.

(j) Ensure that impregnated glass cloth contains 45 to 50 percent of polyester resin, MIL-R-7575, Type III, after cellophane has been removed. (Weight of resin equal to weight of dry glass cloth, comprises 50 percent resin content.)

(k) Cut patches to desired size and shape. The usual fraying of cloth edges will not occur when cut by this method.

(l) Replace or lay up bond ply patch (ply adjacent to core) either by butting to existing bond ply or overlapping as shown in figure 9-23.

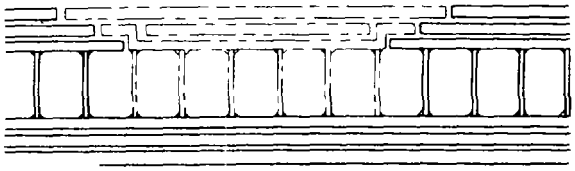

Figure 9-23. Replaced Plies and Core

(m) Butt all other replacement patches to existing plies as shown in figure 9-24.

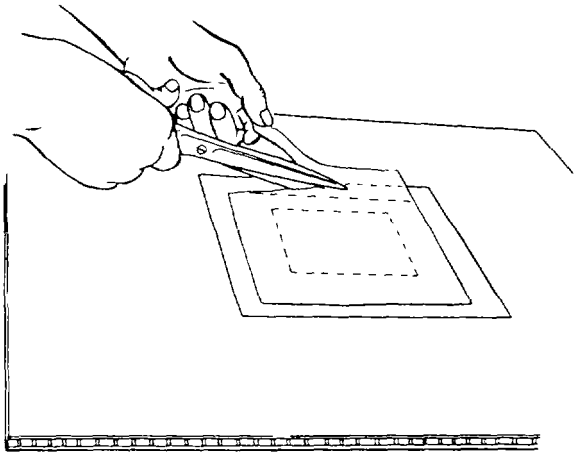

Figure 9-24. Replacing Face Plies

NOTE

A void-free facing repair can be made in place from the exterior of the damaged part provided the repair does not affect the bond ply of the outer facing. This ply must remain intact to provide a working surface for the preparation of the void-free facing repair. If the damage to be repaired extends into the inside face ply, it is necessary to replace and completely cure the damaged section of the bond ply before attempting to void-free the complete repair.

(n) Lightly sand cured repair ply surface and place all remaining patch face piles in same manner. Repeat void-free laminate procedures and curing methods as outlined in paragraph 9-90

(o) When repaired laminate has cured, sand lightly if necessary to obtain smoothness or to remove excess cured resin and to prepare surface for required coating.

(p) Ensure that properly cured laminate has a minimum average Barcol hardness of 55 when a Barcol impressor is employed perpendicular to surface of laminate. An average derived from ten readings is considered satisfactory for large parts, five readings for small parts should be sufficient.

NOTE

Do not take Barcol readings on surface where skin is less than 0.01 inch thick. When testing honeycomb sandwich-type laminated structures, the impressor's point should be placed over supporting cell wall to obtain truer readings and also to avoid damage to face ply. Low readings may be noticed if point is placed over open cell due to flexing of face ply.

(q) In case of damage to honeycomb core, repeat procedures outlined for removal of damaged face plies in steps *(b)* through *(g).* Also cut out damaged core and lightly sand exposed surface of inner ply of cloth.

(r) If core replacement exceeds 4 inches square, replace inner ply and place core in position on newly installed wet bond ply. Remove inner bond ply using standard procedures.

(s) Extend boundary of inner ply cutout approximately 1 inch inside boundary of good core area to facilitate proper positioning of knife when removing bond ply adjacent to good core material.

(t) When new bond ply is installed, coat surrounding old bond ply with prepared resin mix prior to placement of new core material.

NOTE

Core replacement of an area less than 4 inches square may be accomplished without replacing inner bond ply.

(u) Clean with methyl ethyl ketone, Federal Specification TT-M-261.

(v) Cut a piece of core material to exact size of damaged area. Determine thickness and cell size of core material, MIL-C-8073, by consulting manufacturer's drawings. Use a bandsaw having approximately 32 teeth per inch and a speed of approximately 5000 feet per minute to slice honeycomb core.

(w) When area Is thoroughly clean and dry, apply one coat of polyester resin, MIL-R-7575, Type III, to area cut out on radome facing and a like amount on all mating surfaces of replacement core.

(x) Insert core material, ensuring that it conforms closely to existing undamaged honeycomb core. On large curved repairs, cut core into pieces small enough to conform to curvature or preformed to obtain proper fit and maintain desired contour.

(y) Insert first Impregnated ply over core material and apply light and uniform pressure by means of tape, sand, or vacuum bags. Prevent excess resin from entering core cells as this may hinder radar efficiency.

(z) Cure repair area using heat lamps, or by inserting entire part in air-circulating oven at temperatures in accordance with resin manufacturer's instructions.

(aa) After cure is completed, complete repair face ply buildup by repeating procedures outlined in steps (l) through (p). Make all repairs to honeycomb core from Inside of part if possible.

(2) Scarf method of removing damaged face plies. Use scarf method to remove damaged face piles when repair of damage will require removal of an area less than 3 inches in diameter. Do not use scarf method of removing piles from thin face foam core radomes if damage extends into core. To accomplish removal of damaged face piles by the scarf method, proceed as follows:

(a) Sand out to a circular or oval disc shape, as shown in figure 9-25. This should be done to a distance of at least 50 times the total face ply thickness by using a sander, NSN 5130-00-204-0623, or by hand sanding using 180 grit sandpaper. Perform this scarfing operation very accurately to provide a uniform taper.

(b) Prepare glass cloth lamination for facing repairs by cutting largest piece to exact outside shape

of scarfed area. Cut smallest piece so that it over laps the scarfed area by its proportionate amount, depending on number of plies in repair. Cut intermediate pieces so as to have equal taper.

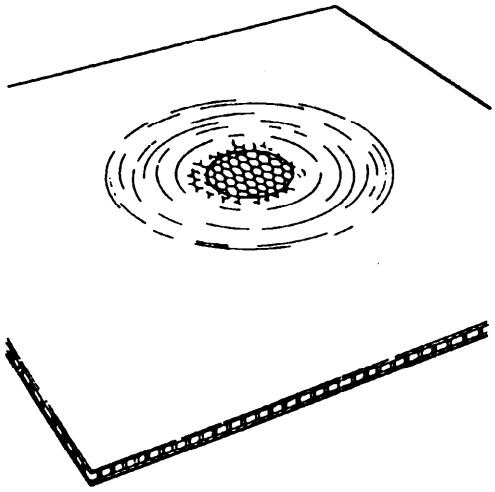

Figure 9-25. Removal of Damaged Face Piles by Scarf Method

WARNING

Never mix catalyst and promoter together, as they are explosively reactive as a mixture. Always mix the promoter with the resin first and then add catalyst to the mixture. Do not inhale the fumes during mixing. Do not store catalyzed resin in an airtight container or an unvented refrigerator. Catalyze only enough resin for immediate use.

(c) Impregnate glass cloth patches with 45 to 50 percent of polyester resin, or epoxy resin, MIL-R-9300, if applicable. (Weight of resin equal to weight of dry glass cloth constitutes a 50 percent ratio.)

(d) When all patches are ready for assembly, coat sanded surfaces with one brush coat of polyester resin.

(e) Fit impregnated glass cloth patch ply in smallest cutout section. With approximately 1/2 inch overlap, fit next larger impregnated cloth repair ply in like manner. Complete repair buildup and cure as previously outlined for stepped joint method. See figure 9-26 for typical scarf method, class II repair.

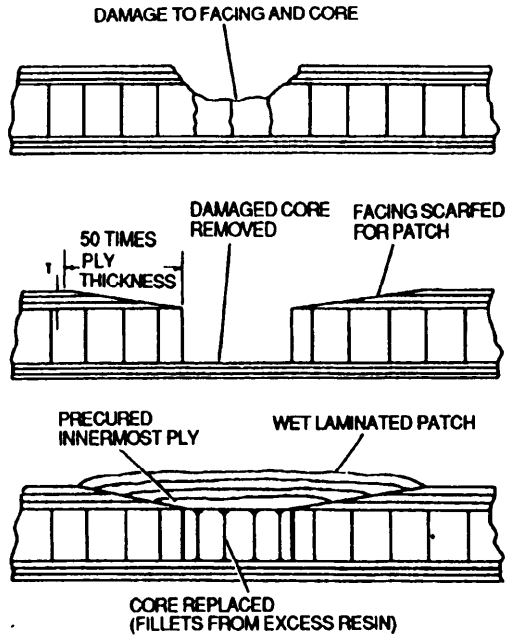

Figure 9-26. Typical Scarf Method for Class II Repair

k. Class III Repair. Damages completely through the sandwich-type laminate material will be repaired by removing and replacing the damaged face plies and core material as previously outlined for class II repair. Never remove inner and outer radome face ply at the same time. One facing will be completed before repair is made on the opposite facing. On solid laminates, 1/2 of the damaged face plies will be removed from one side and the replacement buildup repair completed, then repeat removal and new buildup procedures on opposite side.

(I) Provide opposite side of sandwich-type laminate material with a temporary mold or block to hold core in place during first face ply buildup of class III repair. Provide mold with a shim simulating thickness of opposite facings and secure in place by clamping, propping, or lashing preparatory to core replacement and face ply buildup.

WARNING

Never mix catalyst and promoter together, as they are explosively reactive as a mixture. Always mix the promoter with the resin first and then add catalyst to the mixture. Do not inhale the fumes during mixing. Do not store catalyzed resin in an airtight container or an unvented refrigerator. Catalyze only enough resin for immediate use.

(2) Coat replacement core with catalyzed resin on all edges and top surface only. Leave bottom surface (next to shim) uncoated.

NOTE

Foam core edgings will not require resin coatings.

(3) Remove and replace damaged facings as previously outlined in paragraph 9-8j, which discusses class II repairs.

(4) Repeat repair procedures on opposite facing, except trim cutout ply area larger by approximately 2 inches than first ply cutout area on opposite face repair. This will prevent the joints of the inner and outer repair area from being in the same position, as shown in figure 9-27.

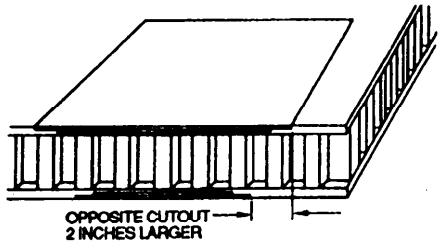

Figure 9-27. Completed Double Face Patch Repair

(5) Do not sand any typo of radome repair to obtain desired contour or for purpose of removing wrinkles if this sanding extends into the glass fabric. Retain contour of radome throughout repair by use of molds.

l. Class II or Class Ill Repair to Plastic with Foamed-in Core. In case of damage to a foam core, refer to paragraph 9-8j for removal and repair procedures for damaged face plies, and see the following procedures for repair of the core:

(1) Remove damaged foam area by cutting vertically to the surface of the face laminate.

NOTE

Do not use acetone, Federal Specification O-A-51, or toluene, Federal Specification TT-T-548, as a solvent cleaner, as it will soften and weaken foam core surrounding cutout area.

(2) Scrape inner skin surface clean, avoiding grease or oil film in area to ensure good bondage of foam to face laminate.

(3) Cut a precise and cured alkyd di-isocyanate foam plug of matching density and thickness to existing core to fit in area of core hole without bonding resinon sides. As an alternate method, mix alkyd di-isocyanate according to manufacturer' s directions and pour into cavity to fill one-fourth of hole height. Cutting and mixing of alkyd di-isocyanate should be performed in a well-ventilated area.

(4) Clamp backup plate to overlap patched area by 4 inches with 1/4-inch hole over cavity. Cut backup plate from metal capable of being constructed to conform to curvature of radome surface. To avoid adhesion of foam to plate, lubricate with benzene, VV-B-231 or equivalent, on face next to cavity.

(5) Using infrared lamps, heat at 110° F (43° C) until full expansion and gelation occurs, then increase temperature to 260º F (127° C) for 2 hours. Drop temperature to 100° F (38° C) before removing backup plate.

(6) Remove excess foam parallel to core level by sanding.

m. Class II or Class III Repair to Plastic with Fluted Care. For damage extending into or through deicing flutes, remove plies as outlined in paragraph 9-8j (1) (a) through (e), and proceed as follows:

(1) Remove damaged flutes by carefully cutting vertically down to opposite face ply.

(2) Carefully remove damaged flutes and exposed inner ply in accordance with paragraph 9-8j (1). Place replacement fluted core on a section of a mold conforming to curvature of area to be as replaced. Flute dimension shall be specified by the manufacturer' s drawings.

(3) Fabricate replacement sections of fluted core in accordance with processes used in manufacture of radome.

(4) Cut a piece of preformed core from appropriate area and trim to exact size of prepared repair area.

(5) Replace inner ply and fluted core in accordance with the procedures outlined in paragraph 9-8j (2) (b).

(6) After fluted core material is replaced, complete repair face ply buildup in accordance with procedures outlined in paragraph 9-8j (1) (i) through (p).

n. Repair of Pre-Drilled Attachment Holes. Previously drilled attachment holes (around the edge or in the solid laminate portion of radome) that require repairing or plugging may be repaired as follows:

NOTE

This type of repair is applicable only to previously drilled mounting holes. Other injuries will be repaired as outlined for repair of radome facings or solid laminates. Plugging of mounting holes will be required on all radomes returned to serviceable supply stock unless the applicable drawing denotes otherwise.

(1) Sand hole to roughen surfaces, clean sanded surfaces thoroughly with methyl ethyl ketone, Federal Specification TT-M-261, and allow to dry.

WARNING

(2) Mix cut fiberglass strands, 1/8 to 1/4 inch in length, with polyester resin, MIL-R-7575, or epoxy resin MIL-R-9300, forming a paste or putty-like mixture.

(3) Tamp mixture into holes and place colored cellophane over each end of hole. Work out all air pockets and cure at temperatures specified in applicable specification for type of resin being used.

(4) After cure, remove cellophane and wet-sand to remove excess resin and to obtain smoothness.

o. Procedure for Preventing Moisture and Oil Contamination. The following procedures outline methods of preventing moisture and oilcontamination of radomes (see figure 9-28):

(1) Place a breather strip constructed of a porous material (such as felt NSN 8305-01-010-4850) 1/4-inch thick and approximately 1 inch wide, or a flexible coil spring approximately 1/2 inch in diameter around entire wet laminate repair and placed no closer than 1/2 inch beyond edges of wet laminates.

(2) Place a continuous 1/2 inch wide strip or ribbon of zinc chromate putty, MIL-P-8116, around outside edge of felt strip or coil spring.

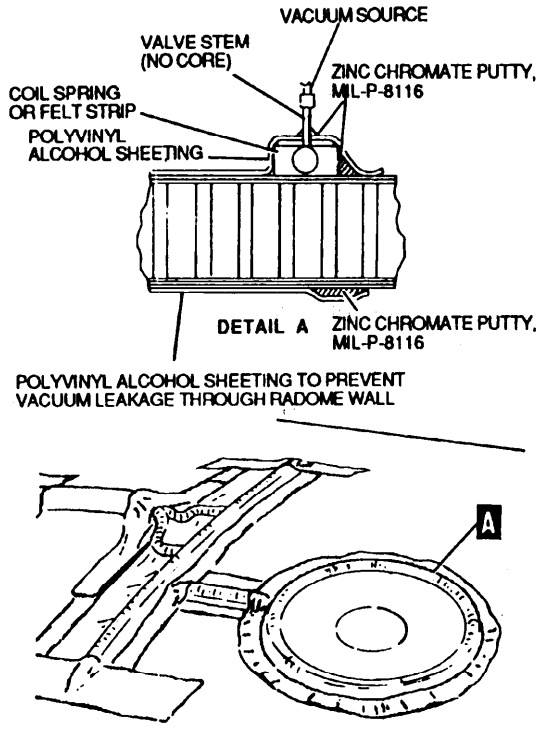

Figure 9-28. Preventing Moisture and Contamination

(3) Cut from Polyvinyl Alcohol (PVA) MIL-P-265 sheeting, a sheet or cover conforming to repair area configuration and extending 1/2 inch beyond zinc chromate putty. (If PVA sheeting is tailored to fit repair area closely, bridging will be eliminated to a great extent.)

(4) Place PVA sheeting over wet laminate and sealing strips. Pierce PVA sheeting and insert a valve stem (core removed) or similar item in a location to allow valve stem to rest upon felt strip or coil spring.

(5) Seal around valve stem where PVA sheeting was pierced using zinc chromate putty.

(6) Press PVA sheeting into strip of zinc chromate putty around the periphery of the repair.

(7) Attach vacuum line and apply vacuum slowly to interior of bag so bag is made to conform as it collapses over wet laminate repair. Wrinkles will be held to minimum and any small ones that do develop shall not bridge gap between laminates and breather strips or any other direct connection to vacuum line. After PVA sheeting has been completely flattened against patch, vacuum pressure will range from 15 to 28 psi.

(8) Using squeegees or other similar devices, wipe out all air and excess resin. Preferably, use squeegees made from teflon material or flexible rubber. Dimensions of squeegees may vary depending on contour of working surface, but for most applications, use rubber squeegees approximately 4 by 6 by 1/2-inch. If rubber squeegees are used, coat PVA sheeting surface with a light film of lubrication oil, MIL-L-17622 or MIL-L-17331, so that friction drag is reduced to a minimum. When teflon squeegees are used, do not lubricate PVA sheeting.

(9) Move squeegee slowly enough that. air bubbles observed through transparent PVA sheeting are swept clear of laminate by wave or motion of excess resin. Continue wiping process until all air bubbles are swept past edge of laminate.

(10) Stop working or wiping laminate when plies of fabric are firmly packed together, as further wiping will create air or vapor voids observable as a whitening and a loss of transparency.

(11) Should PVA sheeting be punctured during void-free working or wiping process, repair with transparent tape and work air which has penetrated bag from laminate. If opposite face ply is damaged or porous, cover it with a PVA sheeting and seal edges with zinc chromate puttyso that a vacuum can be maintained. Maintain vacuum pressure during the complete process.

NOTE

To prevent resin from entering vacuum line, construct and connect a resin trap to vacuum line at a convenient distance from where line connects to PVA sheeting or cover. Construct resin trap to permit cleaning and disposal of resin accumulation.

p. Procedure for Obtaining Void-Free Laminate. Some radomes were not fabricated to a void-free configuration. Ensure that radomes undergoing depot level repair are void-free by one of the following procedures, if in a nonvoid-free condition. Exceptions to this requirement will be authorized only by the U.S. Army Aviation and Missile Command (AMCOM).

NOTE

Ensure that radomes are dry and free of all contaminants. Make necessary repairs prior to accomplishing void-free processes.

(1) Remove and replace nonvoid-free and void-free outer ply from inside of radome and replace in accordance with paragraph 9-8j through 9-8m depending on the type of repair accomplished.

(2) Seal nonvoid-free surface by use of following materials and processes:

WARNING

The materials in the following steps are toxic. Provide adequate ventilation for personnel.

(a) Materials to be used are resin laminate, EPOCAST 41A with hardener 9246. Mix according to manufacturer' s instructions. Pot life of mixture is approximately 15 minutes at room temperature; therefore, small quantities should be mixed and applied immediately.

NOTE

Adequately ground radome to prevent static electricity discharge during acetone cleaning.

(b) Prepare surface to receive seal coat by lightly sanding with 2/0 abrasive paper, Federal Specification P-P-121. Skin depressions at each honeycomb cell may be difficult to sand sufficiently. These unsanded depressions are acceptable when thoroughly cleaned with acetone, Federal Specification O-A-51.

(c) Remove loose particles and sanding dust by wiping with a lint-free cloth dampened with acetone. Allow a minimum drying time of 30 minutes.

(d) Apply mixture to prepared surface by knife immediately after mixing. Spread evenly with a flexible squeegee. Use squeegee made from spring steel with one or both edges surface-ground (other materials may

be used). Ensure that contact edge of squeegee is straight and free of burrs. Apply coat by moving squeegee at an acute angle to the direction of motion so the coating material is pressed into skin voids. Avoid moving the squeegee at an obtuse angle as this tends to lift the sealer and create pin holes. Work areas of 12 to 18 inches square at one time. Apply the seal coat as thinly as possible to a maximum thickness of 0.003 inch. Excess and uneven buildup will reduce radar efficiency.

NOTE

Minor imperfections in seal coat such as those caused by depressions at each honeycomb cell or by depressions resulting from bag wrinkles during manufacture of radome will not be cause for rejection, providing sealer around defect is adequate but not excessive.

(e) Allow sealer to cure at room temperature. Tack-free time is 1 to 2 hours at 80° F (27° C). Sufficient strength will be obtained after 24 hours to allow handling, and full strength is obtained after 72 hours.

(3) Sealing may also be accomplished by using the following resin mix formula, or equivalent:

Epon 828	100 parts by weight
Cab-O-Sil	5 to 6 parts by weight
Di-ethylene Triamine (D.E.T.A.)	6 to 8 parts by weight
Epoxide 206	15 to 17 parts by weight

(a) Mix formula by adding small portions of Godfrey Cabot Cab-O-Sil, or equivalent epoxy resin, MIL-R-9300, while stirring thoroughly.

(b) Add Union Carbide Epoxide 206, or equivalent, mix well, and allow to set a minimum of 12 hours.

(c) After setting for 12 hours, add diethylene triamine and mix thoroughly.

NOTE

Characteristics of this formula are approximately the same as for the Epocast seal coat and the same application techniques apply.

(4) Identify radomes made void-free by either of the three methods by stenciling a suffix letter M after the part number recorded inside the radome.

q. Procedure for Edge Band Sealing. Accomplish following edge band sealing procedure to prevent water from entering radome core through porous edge laminates or rivet and bolt holes. This procedure may not apply to all radomes because a water contamination problem may not exist. Therefore, the requirement for edge band sealing will be determined by AMCOM and directed by the appropriate maintenance manual. This procedure is shown in figure 9-29.

CAUTION

Removal of sealant with cutting tools made from materials harder than 2024-T3 aluminum alloy is prohibited. Damage to radome structure can occur.

(1) Determine amount of radome laminate edge, if any, that must be removed to allow for sealant-thickness that is to be applied.

(2) Do not sand or shave down radome edge if it is at least 0.020 inch below metal edges. If dimension is less than 0.020 inch, shave or sand down to 0.031 (+0.000, -0.011) inch.

(3) Ensure that radome edge bands not having metal attaching strips are within limits shown in figure 9-29.

NOTE

Do not sand or shave down radome edge laminate if the sealing procedure has been accomplished at any time prior to pre-repair inspection. Make this determination a matter of record prior to removal of sealant and metal edge bands.

(4) Clean edge band area to be sealed prior to application of sealant. Remove grease and oil from fiberglass laminate with rags dampened with methyl ethyl ketone, Federal Specification TT-M-261. Remove dust and loose particles with dry rags or vacuum cleaner followed by wiping with a clean rag dampened with methyl ethyl ketone. Clean metal parts in accordance with standard cleaning procedures.

(5) Seal prepared areas with sealing compound, MIL-S-8802, Class B-2 or Class B-4. Mix sealing compound and apply with a suitable sealant gun or spatula. Apply to areas as shown in figure 9-29. Ensure that fillet and rivet seal are a minimum of 0.031 inch thick, and that edge seal is a minimum of 0.020 inch thick when step (2) is applicable.

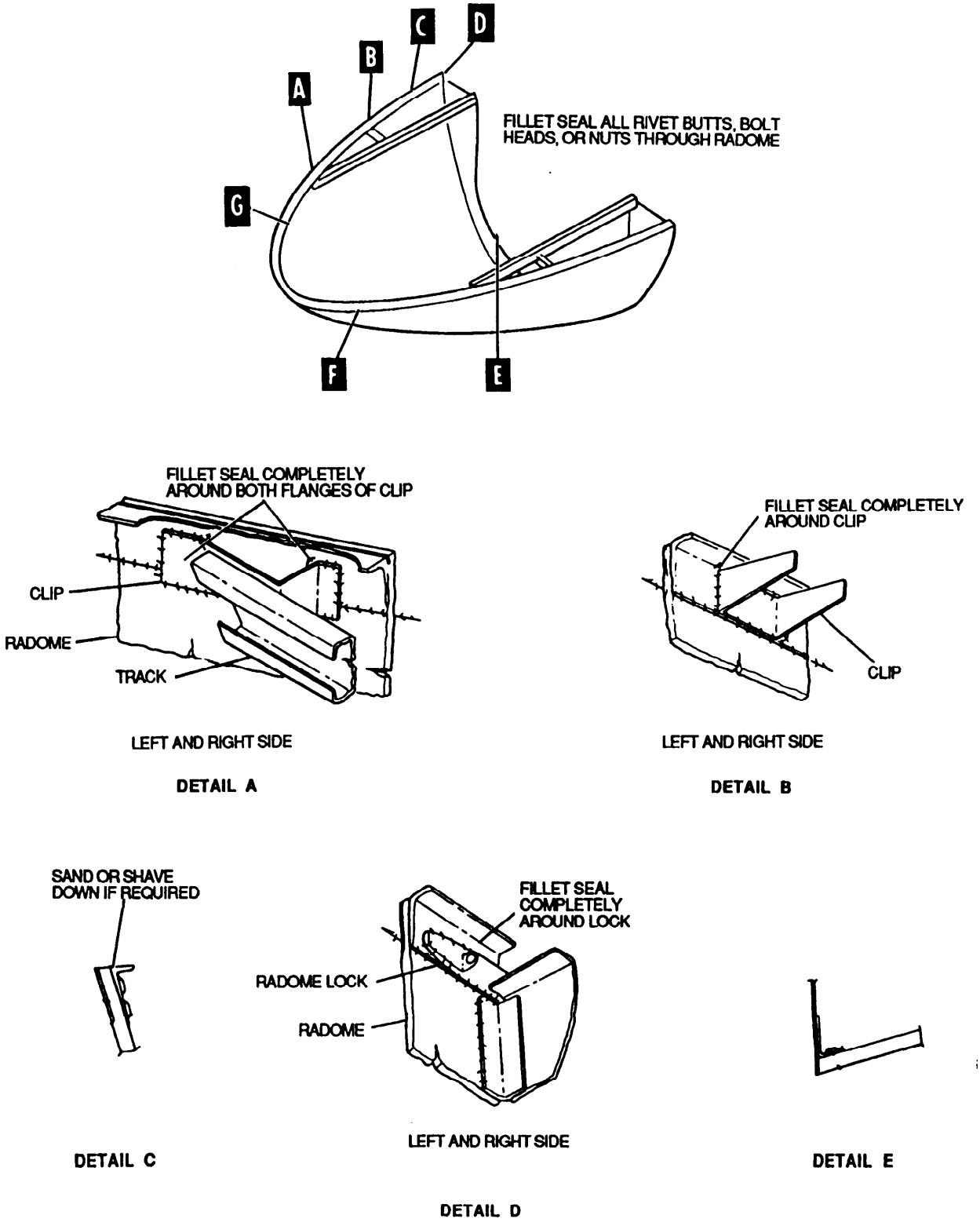

Figure 9-29. Typical Edge Band Sealing (Sheet 1 of 2)

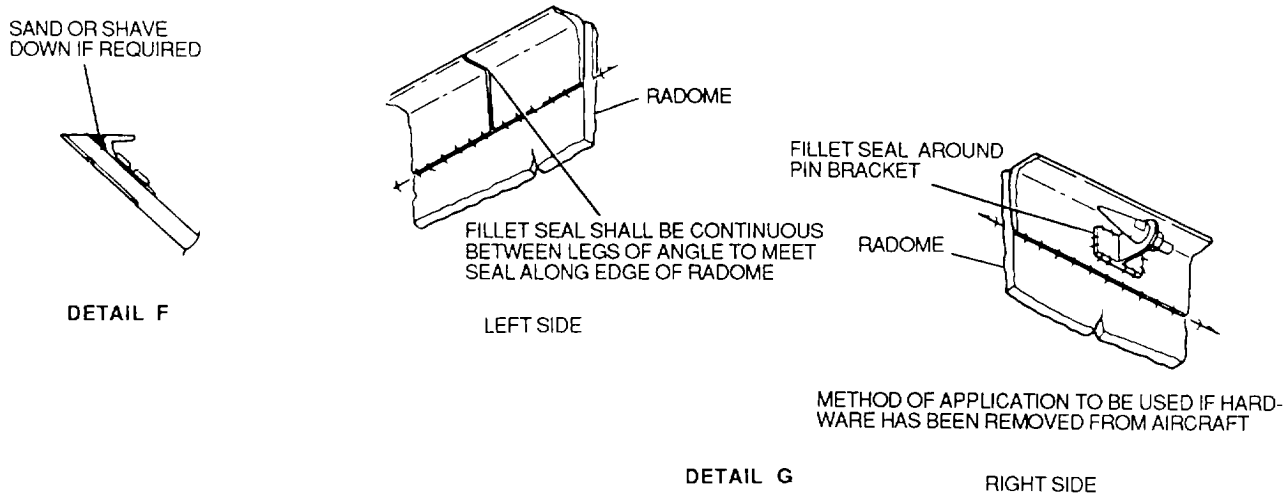

Figure 9-29. Typical Edge Band Sealing (Sheet 2)

(6) Accomplish repairs to damaged sealant promptly. Prepare damaged area by removing loose particles for better adhesion Clean reworked area in accordance with step *(4)*, and reseal in accordance with step *(5).*

r *Inspection after Repair.* Each part shall be inspected during repair to assure that the requirements of this technical manual have been compiled with, as well as special requirements that may be imposed by specific work directives in addition, each finished repair will be inspected for overall good workmanship Acceptance of minor defects is permissible provided they do not exceed specific radome specification and are within the following maximum allowable limits.

(1) Uniformity. The laminate shall be within the tolerance of the drawings and specifications, and will be of uniform workmanship.

(2) Gaps. Each layer of fabric will butt up to the existing ply, unless otherwise specified, to form, a continuous layer.

(3) Cracks (actual fracture). There will be no cracks in the facing of the radome face ply repair.

(4) Holes. There will be no holes which penetrate the first layer of glass cloth

(5) Blisters. Blisters are areas in which there is a lack of bond between any two piles of glass cloth in a repaired laminate.

Internal blisters or styrene bubbles less than 005 inch in diameter will be permitted within the two outer piles of the radome sandwich-type laminate structure provided they have a wet translucent appearance Blisters with a whitish appearance indicate either a resin starved area or a delamination and are not permitted No voids due to air leakage during processing will be permitted Small blisters not in excess of 1/4 inch in diameter may be allowed in areas other than the two outer piles provided they are no closer together than 4 inches

(6) Resin pockets and excess surface resin There will be no resin pockets which will cause thickness greater than those allowed for the part Resin surface will be as established in plastic resin sandwich construction, M IL-S-9041.

(7) Starved areas. There will be no starved areas. A starved area is defined as an area in which the glass cloth is not impregnated with resin.

(8) Tackiness. The repaired laminate surface will be fully cured and free of tackiness A Barcol impressor test reading will not be less than 55

(9) Wrinkles. A wrinkle is defined as a raised fold of cloth in a ply of the lay-up, generally resulting in a thickness to the part in that area in excess of maximum tolerance. No wrinkles are permitted in the exterior surfaces or in window area of interior surfaces Wrinkles up to 1/32 inch in height and up to 12 inches long may be allowed on interior surface outside of window area.

(10) Delamination. Unbonded areas and air pockets in facing repair shall be rejected if greater than the size and quantity as specified for blisters in step *(5).* Delamination between core and bond piles are not acceptable. Delaminated areas will have a whitish appearance through translucent piles. If the plies are not translucent, delamination may be detected by lightly tapping the radome surface area with a small metal object (coin tap test), such as a 50 cent piece, taking care that the tapping is not vigorous enough to damage the part. The sound of such tapping will be clear metallic ring over well bonded areas and a dull thudding sound over delaminated areas. A relatively large delaminated area will result in a soft, flexible, or ballooned characteristic of the debonded laminate and can be detected visually or by exerting thumb or hand pressure to the suspected area.

(11) Voids. Voids or pores extending into the glass cloth repair of the outer ply of the inside radome surface are not acceptable. Small pits are acceptable in the resin seal coat provided they do not penetrate completely through the seal coat. Printing on outside radome surface will be repaired as required by paragraph 9-91.

(12) Other defects. There will be no foreign matter or substances in the repair laminate such as metal particles or unauthorized paints, lacquers, varnishes, and waxes. Presence of these materials can seriously degrade radar system operation. When spray painting metal hardware attached to the radome, necessary precautions will be taken to prevent overspray from being deposited on the radome surface.

(13) Erosion resistant and thermal reflective coatings. The coating will be uniform and within the tolerances specified In TM 55-1500-345-23. Blisters are not acceptable. Rough areas resulting from burst blisters less than 1/4 inch in diameter may be allowed providing they are no closer than 6 inches.

CHAPTER 10

AIRCRAFT PLASTICS

10-1. General. The plastics discussed in this chapter are transparent and are used on Army aircraft in windows, canopies, and similar enclosures. Monolithic and laminated transparent plastic enclosures may be repaired in accordance with the procedures outlined in this chapter. These procedures and the repair limitations given in applicable aircraft maintenance manuals are satisfactory for use on pressurized and unpressurized aircraft.

10-2. Characteristics. Transparent plastic materials are hard when manufactured, but they become soft and pliable when exposed to heat. The plastic can be molded when soft, and it will retain its shape as it cools. This process can be repeated many times without damage to the material unless the specified heat ranges are exceeded.

10-3. Optical Quality. Because of the use to which these materials are put in aircraft enclosures, optical quality is of prime importance. Plastics are similar to plate glass in many of their optical characteristics. The ability to locate and identify other aircraft in flight, to land safely at high speeds, to maintain position in formation, and to sight guns accurately through the enclosure depends on the surface cleanliness, clarity, and freedom from distortion of the plastic. These factors depend on the amount of care exercised in the handling, fabrication, and maintenance of the material.

10-4. Types and Identification. The two typos of transparent plastic used in Army aircraft are heat resistant acrylic and craze resistant acrylic plastics. The original material must be identified before it is repaired or replaced. The following paragraphs describe methods for identifying these types of plastics.

a. Military Specification Number. New plastic sheet normally has the military specification number printed on the protective cover. The following are the numbers for plastics used by the Army.

MILITARY SPECIFICATION NUMBER	TYPE OF MATERIAL
MIL-P-5425	Heat-resistant acrylic
MIL-P-8184	Craze-resistant acrylic

b. Burning. Acrylic plastics have characteristic odors when burned. A small sample of the unknown material should be burned and its odor compared with that of a known sample. Both examples should be ignited and allowed to burn for several seconds before blowing out the flame. Acrylic plastics burn with a steady, clear flame.

c. Visual Inspection. By inspecting the color transmitted through the edge of a piece of plastic, the type of plastic can be determined. MIL-P-5425 is practically clear, MIL-P-8184 has a slight yellowish tint

d. Chemical Reaction. Plastics can also be identified by applying acetone and zinc chloride to them. Wet the finger with acetone and rub it on an area of the plastic that will not interfere with vision. Then blow on the area. If the plastic is acrylic, it will turn white. A drop of zinc chloride will have no effect on acrylic plastics.

10-5. Storage and Handling. Transparent plastics will soften and deform when sufficiently heated; therefore, storage areas that have high temperatures must be avoided. The following practices should be observed.

a. Location. Plastic sheets should be kept well away from heating coils, radiators, hot water pipes, and steam pipes. They should also be stored in a cool, dry place away from the fumes that may be found near paint storage and spray areas. Paper-masked transparent plastic sheets should be kept indoors. Exposure to sunlight will cause the masking paper adhesive to deteriorate rapidly so that it clings to the plastic and becomes hard to remove.

b. Position. Plastic sheets should be stored diagonally with the masking paper in place, in bins which are tilted at an angle of about 10 degrees from the vertical to prevent buckling. If sheets must be stored by stacking them on top of one another, care should be taken to keep chips and dirt from getting between them. Stacks should not be more than 18 inches high, and the smaller sheets should be stacked on top of the larger ones to avoid unsupported overhang, as shown in figure 10-1.

c. Masking Paper. Masking paper should be left on the plastic sheets as long as possible to keep them from getting scratched or gouged when they rub against each other or across rough-surfaced or dirty tables.

d. Formed Sections. Formed sections should be stored so that they are properly supported and will hold their shape. Vertical nesting should be avoided. Protect formed parts from temperatures higher than 120° F (49 " C). Protection from scratches should be provided by applying a protective coating conforming to MIL-C-6799.

10-6. Masking. Masking paper is very important for the preservation of the finish of the plastic. It should be kept on as long as possible. For all cutting operations except when close tolerances are required, the pattern can be laid out directly on the paper.

CAUTION

Do not use gasoline, alcohol, kerosene, benzene, xylene, ketones including acetone, carbon tetrachloride, fire extinguisher or deicing fluids, lacquer thinners, aromatic hydrocarbon, ethers, glass cleaning compounds or other unapproved solvents on transparent acrylic plastics to remove masking paper or other foreign material as these will soften and/or craze the plastic surface.

a. Removal. If masking paper adhesive deteriorates due to long or improper storage, making removal of paper difficult, moisten the paper with aliphatic naphtha, Federal Specification TT-N-95, Type II, which will loosen the adhesive. Sheets so treated should be washed immediately with clear water.

b. Replacement. When it has been necessary to remove masking paper from the sheet for fabrication, the surface should be remasked as soon as possible. Either replace the original paper on relatively flat parts or apply a protective coating conforming to MIL-C-6799 on curved parts.

10-7. Forming of Plastics. Transparent acrylic plastics become soft and pliable when heated to their respective forming temperatures. They can then be formed to almost any shape and, on cooling, will retain the shape to which they are formed, except for a slight contraction.

a. Cold Forming. When possible, cold-forming compound curvatures using acrylic plastics (springing them into a curved frame without heating) should be avoided. Acrylic plastics may be cold-bent in a single curvature if the material is thin and the bend radius is at least 180 times the thickness of the sheet. Cold-bending beyond these limits may result in crazing because stresses are imposed in excess of those recommended for continuous loading.

b. Heating for Forming. Acrylic plastics can be easily formed after heating. The following paragraphs describe practices to be used when heating plastics.

(1) Masking materials. All masking paper and adhesive must be removed from the sheet before it is heated. If the sheet is dusty or dirty, it should be washed, rinsed well with clean water, and thoroughly dried by blotting with soft, absorbent paper.

CAUTION

Ensure that specified temperatures are not exceeded during forming of acrylic plastics. Surface bubbling can occur, and overheating will destroy their optical qualities.

(2) Heating. For best results in forming, acrylic plastics should be heated to the temperatures shown in table 10-1. A forced, filtered air oven capable of operating from 120 to 274° F (49 to 190° C) should be used.

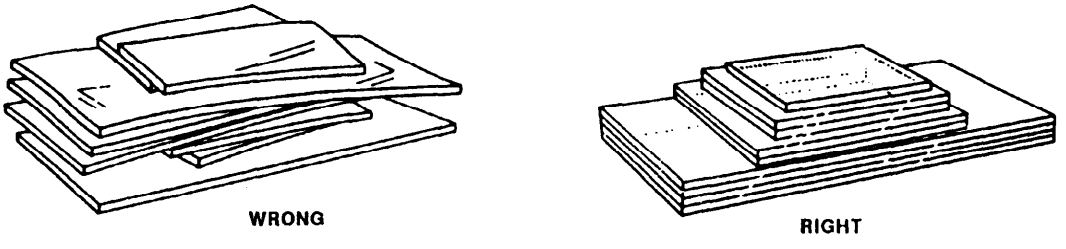

Figure 10-1. Right and Wrong Methods of Horizontal Stacking of Small Sheets

(3) Other heating methods. Do not heat plastics by any method other than the prescribed oven, except in an emergency.

(a) Other ovens. A kitchen baking oven or any available oven can be used in an emergency.

(b) Infrared lamps. Infrared lamps may be used. Arrange them on 7- to 8-inch centers in a bank large enough to cover the entire sheet. The sheet should be placed about 18 inches from the face of the lamps to achieve even distribution of the heat.

(4) Support of sheets. Plastic sheets being heated in an oven can be supported by two general methods: clips and shelves.

(a) Clips. For uniform heating, it is best to vertically handle the sheets of plastic. This can be done by using an overhead monorail mounted in the roof of the oven and equipped with a spring channel or by using a series of clips for grasping the plastic sheet.

(b) Shelves or drawers. Shelves or drawers are used for small pieces that are hard to handle and for pieces without enough trim for clips or channels to be used. The shelves, covered with soft felt or flannel should be of openwork construction so that more air can circulate around the sheet of plastic for uniform heating.

c. Forms. Because most forms used for acrylic plastics are not subjected to much pressure, they may be made of material as brittle as plaster. For simple two-dimensional shapes, metal, pressed wood, or plywood are easily fabricated. For more complicated shapes, reinforced plastic or plastic forms are easier to make and fully satisfactory.

(1) Contour. Forms should be free from wariness and other variations in contour that might cause optical distortion in the formed part. The surfaces of forms should be sanded smooth and covered with soft cloth, such as billiard felt, outing, flannel, flannelette, imitation chamois, and flocked or suide rubber sheeting.

(2) Form size. If the final dimensions of the formed parts are critical, the molds must be made sufficiently oversize to allow for shrinkage of the parts when they cool. Mold surfaces should extend beyond the trim line of the part. The form should have some device for holding the edges of the plastic sheet against it during cooling.

d. Forming Methods. The major categories of plastic forming are two-dimensional (drape) and three-dimensional forming.

Table 10-1. Oven Temperatures for Acrylic Plastic

Type of forming	Thickness of sheet (inch)		
	0.125	0.250	0.500
Two-dimensional (drape)	275 ° F (135° C)	275 º F (135° C)	275 ° F (135° C)
Air pressure differential without form (vacuum forming)	302 ° F (150° C)	293 ° F (145° C)	293 ° F (145° C)
Stretch forming (dry mold cover)	320 ° F (160° C)	302 ° F (150° C)	302 ° F (150° C)
Air pressure differential with male form	338 ° F (170° C)	320 ° F (160° C)	320 ° F (160° C)
Stretch forming (with male form and grease)	356 ° F (180° C)	356 ° F (180° C)	338 ° F (170° C)
Male and female forming	356 ° F (180° C)	338 ° F (170° C)	338 ° F (170° C)
Air pressure differential with female form	356 ° F (180° C)	338 ° F (170° C)	338 ° F (170° C)

(1) Two-dimensional (drape) forming. This is the most commonly used process for forming repair parts. When the hot acrylic is removed from the oven, soft white cotton gloves should be worn and the plastic should be laid carefully over the form. The edges of the plastic should be held against the form by hand, hold-down rings, or yokes until the sheet has completely cooled. Cooling can take from 10 to 30 minutes, depending on room temperature and thickness of the sheet. Cooling must not be forced.

(2) Three-dimensional forming. Parts with compound curves may be formed from plastic sheets by six different methods, and the methods are sometimes combined.

(a) Stretch forming. Stretch forming may be done either manually or mechanically. The heated plastic sheet is formed by stretching it across a form.

(b) Male and female forming. Male and female forming may be used for compound shapes of irregular contour, such as those with reeding, fluting, and steps.

(c) Air pressure differential without form. This method, commonly called vacuum forming, is the method most commonly used for aircraft canopies. This method does not have some of the undesirable features found in other methods of forming compound curves.

(d) Air pressure differential with female form. This method is used when the desired part varies a great deal from a true surface tension shape because it has sharp changes of contour. The part is formed by drawing it into a female form made of plastic or metal.

(e) Air pressure differential with male form. This is another method of obtaining shapes that differ from the true surface tension shape. It is based on the tendency, known as elastic memory, of the heated plastic to revert to its original flat sheet form.

(f) Rotoforming. Rotoforming is a method of forming transparent acrylic canopies with centrifugal force.

10-8. Cutting Techniques. Acrylic plastics can be machined after layout by sawing, routing, scribing, and drilling.

a. General Precautions The following paragraphs provide guidelines for cutting acrylic plastics.

(1) Tools. Tools should be kept sharp.

(2) Cooling. Unlike metals, acrylic plastics are poor heat conductors; therefore, ample means should be provided to dissipate frictional heat. This can be done either by use of a coolant, or in some cases, an air blast. A water-soluble cutting oil is the recommended coolant. Other coolants may contain chemicals harmful to the plastic and should not be used.

b. Layout. Layout can be done by marking the plastic and may involve the use of templates.

(1) Marking. Where extreme accuracy is not required, the work may be laid out by penciling the cutting lines directly on the masking paper. However, layout lines for close tolerances should be scribed directly on the plastic surface using straightedges or layout templates according to the requirements of the job. If the masking paper is removed before scribing, it should be replaced again to within about 1/4 inch of the markings before the piece is cut.

(2) Templates. Layout templates may be made of plastic sheeting to which suitable handles can be cemented. Sharp edges or rough spots should be carefully rounded or smoothed. If metal templates are used, a thin piece of flannel should be attached over the contact surface.

c. Saws. Several types of saws, including circular, band, jig, and veneer saws, are suitable for sawing transparent plastics.

(7) Circular saws. Circular saws for cutting acrylic plastics should be hollow-ground or have set or swaged teeth to prevent binding. To get a smooth edge, the teeth should be sidedressed on the machine after they are set and sharpened. The acrylic plastic should be fed in slowly enough to prevent overheating. The feeding should not be forced, but should vary with the thickness of the plastic being cut, the type of blade used, and its speed and sharpness. Moderate smoking and smearing at the cut indicates that feeding is too rapid. A good way to obtain smooth edges at the exit end of a cut is to slow down the rate of feeding as the saw blade leaves the cut. Table 10-2 indicates the type of saw blade appropriate for use with various thicknesses of acrylic plastic sheets.

(2) Band Saws. Band saws should be used where flat sheets are to be cut in curves or where formed parts are to be rough-trimmed. Metal-cutting blades are best for cutting acrylic plastics. Table 10-3 shows the saw widths appropriate for various cut radii.

Table 10-2. Types of Circular Saw Blades for Cutting Acrylic Plastic Sheets

Thickness to be cut (inches)	Blade Thickness (inches)	Teeth per inch	Type blade
0.040-0.080	1/16-3/32	8-14	Hollow-ground
0.100-0.150	3/32-1/8	6-8	Hollow-ground
0.187-0.375	3/32-1/8	5-6	Spring set
0.438-0.750	1/8	3-4	Spring set or swaged
1.000-4.000	1/8-5/32	3/4	Spring set, swaged, or cemented carbide

Table 10-3. Bandsaw Widths for Various Radii of Cuts

Saw width (inches)	Points per inch	Thickness		Minimum radius to be cut (inches)
		Inch	Gauge	
3/16	7	0.028	22	1/2
1/4	7	0.028	22	3/4
3/8	6	0.028	22	1-1/2
1/2	5	0.032	21	2-1/4
5/8	5	0.032	21	3
3/4	4	0.032	21	4-1/2
1	4	0.035	20	8
1-1/4	3	0.035	20	12
1-1/2	3	0.035	20	20

(3) Jigsaws. Jigsaws can be used to cut thin sheets of acrylic plastic. They do not do a good job of cutting through thick pieces. If a jigsaw has to be used, it must be fed lightly and its teeth must be cleaned often.

(4) Veneer saws. Veneers saws are small, circular, portable tools that are mostly used to trim the large, formed acrylic plastic parts that are held in a trip jig or fixture.

d. Routers. For high-speed portable routers, standard two-blade woodcutters give satisfactory results. On vertical spindle shapers, multiblade cutters of two, three, or even more blades may be used. In general, the greater the speed the less the number of cutting edges required. Cutters up to three inches in diameter may be used without difficulty. They must be sharp and should always be ground with a back clearance angle of about 10 degrees and a rake angle of 20 to 30 degrees, as shown in figure 10-2.

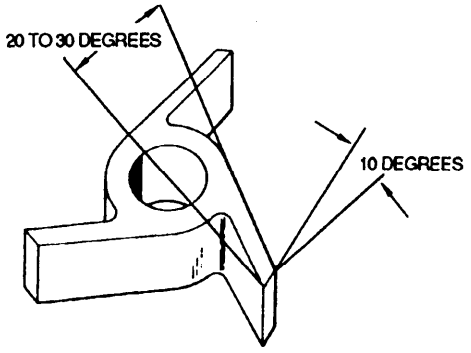

Figure 10-2. Typical Router Cutter

e. Scribing and Edge Sanding. This fabrication method is used on flat sections or two-dimensional curved pieces. The sheet is first cut to approximate shape on a band saw, using a scribed line as a guide and cutting about 1/16-inch oversize. After the sheet has been cut, it is sanded to the correct size. Drum or belt sanders are used for curved edges and disc sanders for removing material from straightedges and outside curves. When sanding irregular shapes or large pieces that are difficult to rotate around a fixed machine, an air-driven or small electric hand sander is used.

f. Drilling. For both accuracy and safety, the piece of acrylic plastic to be drilled must be clamped or fixed. Drills must have slow-spiral polished flutes, as shown in figure 10-3, which should be as wide as possible. The best lubricant and coolant for drilling plastics is a water-soluble cutting oil. No coolant is needed for drilling shallow- or mediumdepth holes, but a coolant is desirable when drilling through thick plastics. The twist drills commonly used for soft metals can be used successfully for acrylic plastics if normal care is taken. However, for best results, drills should be reground. Observe the following practices when grinding a drill:

- The drill should be properly ground so it is free of nicks and burrs that would affect the surface finish.
- The cutting edge must be dubbed off to a zero rake angle.
- The length of the cutting edge, which determines the width of the chip, can be reduced by increasing the included angle of the drill.

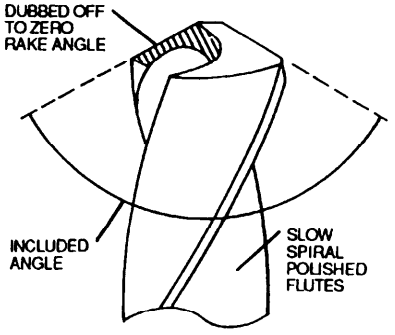

Figure 10-3. Drill for Acrylic Plastics

10-9. Cementing Procedures. With care and proper procedure, it is possible to obtain a cemented joint which approximates the original plastic in strength. Cementing of transparent acrylic plastics depends on the intermingling of the two surfaces of the joint so that there is actual cohesion as in the material itself. This is shown in figure 10-4.

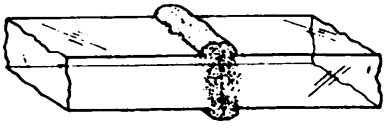

Figure 10-4. Cemented Plastic Joint

a *Type of Cement*. Acrylic-base adhesive for acrylic plastic (MIL-A-8576, Type I) is used when cementing heat-resistant acrylic plastic (MIL-P-5425). Type II of the same adhesive is used when cementing modified acrylic plastic (MI L-P-8184).

WARNING

MIL-A-8567 adhesives contain a toxic volatile liquid that will be harmful if inhaled for prolonged periods. Therefore, it must only be used with adequate ventilation and protective clothing, to include respirators. If it is accidentally spilled on the hands or skin, remove it immediately by dissolving it with solvent (ethyl or isopropyl alcohol) followed by washing with soap and water. Symptoms of overexposure to this liquid are drowsiness, dizziness, and nausea. Treat by wrapping patient in blankets, providing plenty of fresh air, and obtaining medical assistance.

b *Soak Method*. The most common procedure employed when cementing transparent plastics (MIL-P-5425) using cement (MIL-A-8576) is by the soak method, which consists of dipping one of the two pieces to be cemented into the cement until a sufficient cushion is formed, as shown in figure 10-5 When this surface is pressed against the opposite dry surface, the excess cement forms a second cushion which is shallow, but thick enough to permit thorough intermingling of the two surfaces. This process is shown in figure 10-6

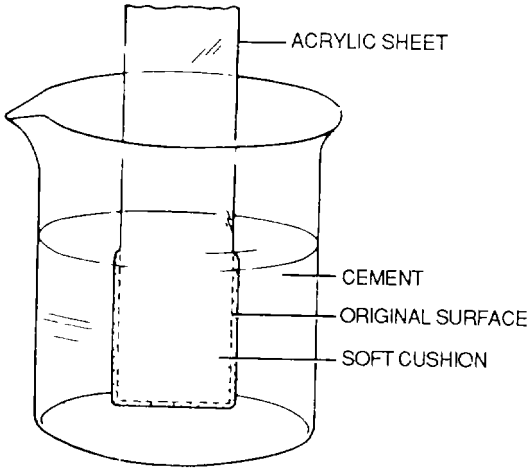

Figure 10-5. Formation of Cushion on Acrylic Plastic by Immersion in Cement

c *Glue Method*. Sometimes, for convenience in handling, clear transparent plastic shavings of the same type as the transparent plastic being cemented, are dissolved in the cement to give it a thick, syrupy consistency, so that it can be applied like glue This viscous cement, however, works on exactly the same principle as a soak cement, i e, the excess solvent softens and swells both surfaces permitting an intermingling of the cushions and the formation of a true cohesive bond This procedure is shown in figure 10-7.

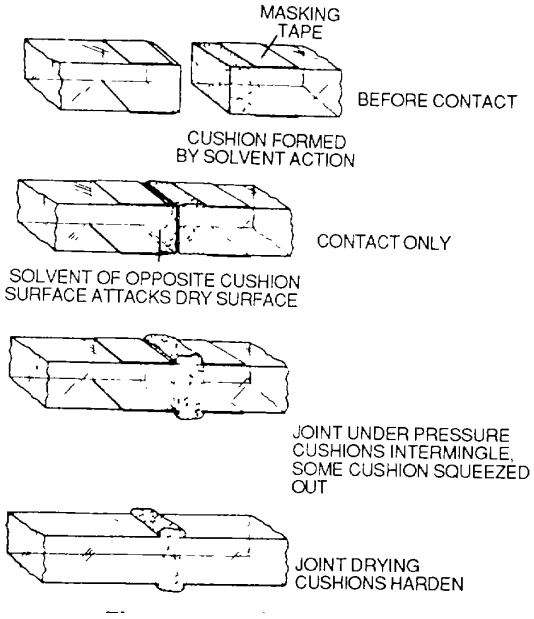

Figure 10-6. Soak Method

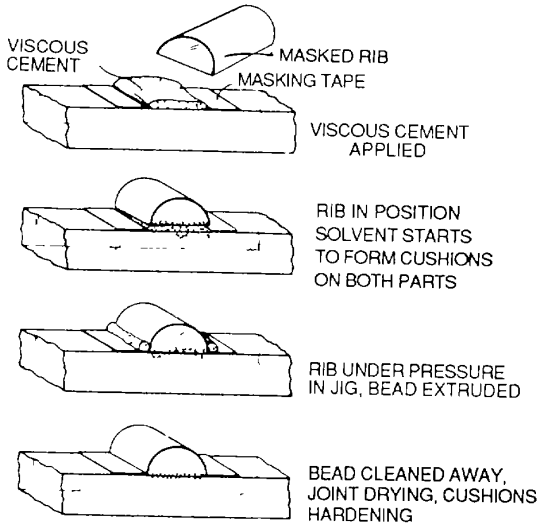

Figure 10-7. Glue Method

d *Direct Application Method.* The direct application method will be used when cementing modified acrylic plastic. In this method, adhesive MIL-A-8576, Type II, is applied to either one or both surfaces and immediately assembled. The parts should be held together in a jig while the cement cures. Unlike the two methods previously described, this method of cementing does not form a cushion. The joint may be handled after being subjected to a temperature of 70°F (21°C) or higher for 4 hours, but should be allowed to harden for 25 hours at room temperature or 4 hours at 150°F (66°C) before further machining or forming.

e *Fitting.* For a satisfactory joint, the two pieces to be cemented should align accurately. Because it is preferable to cement flat surfaces rather than curved ones, the curved sections should be routed or sanded to obtain flat surfaces before cementing. When two curved surfaces must be cemented, as in an overlap joint, the curves of both should have the same radius. All cemented joints should be properly bonded over at least 90 percent of the joint surfaces. The remaining 10 percent may have bubbles or dry spots, unless otherwise indicated on applicable drawings. The two surfaces should have a fairly smooth finish. They do not need to be polished, but they should at least be sanded smooth.

f *Masking.* To limit the softening action of the adhesive to the area of the joint, the surrounding acrylic plastic must be masked with a pressure-sensitive tape, which is not affected by the action of the adhesive. The tape must be properly applied, especially at the edges, and enough overlap (about 1/4 inch) must be allowed so that the adhesive does not seep under the edge and attack the acrylic plastic. There must not be any air bubbles underneath the tape. Because applying successive strips of tape is often time-consuming, it is sometimes preferable to mask a complex or curved part by coating it with a plasticized gelatin solution.

g *Soaking.* The function of the cushion formed by the cement is only to permit intermingling of the two surfaces to be bonded. The liquid on the cushion surface, not the cushion itself, is the bonding agent. Make the cushion no larger than necessary to obtain intimate contact. Figure 10-8 illustrates this principle. The thickness of the cushion depends on the soaking time.

h *Assembling.* The interval between the soaking time for regular and heat-resistant acrylic plastic or between the direct application for modified acrylic plastic and the assembly of the joint may be the most critical period of the entire cementing operation. Because these liquid adhesives evaporate quickly, the joint must be assembled as fast as possible. If the cushion is allowed to dry or if the joint is wiped free of the adhesive before being closed, the joint may break open or it may lack the required strength when the pressure is removed. The soak tank used in cementing acrylic plastic should be near the cementing operation. Jigs should be arranged so that the operator can assemble the two pieces quickly and accurately.

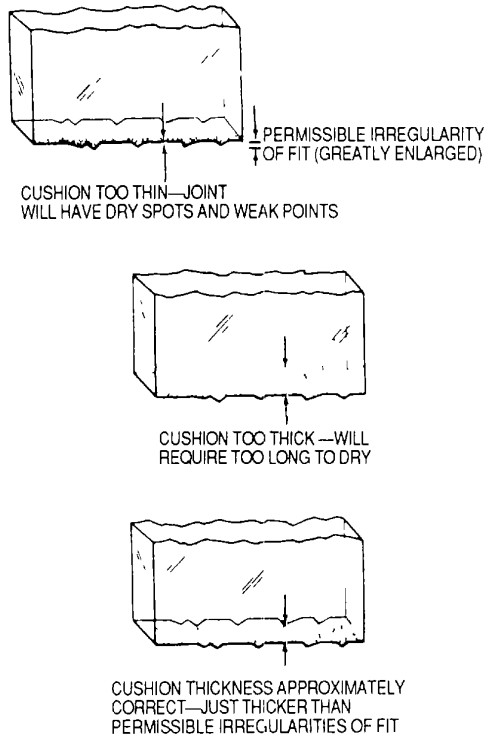

Figure 10-8. Cushion Thickness

NOTE

It is Important to allow slight interval between the time the two pieces are placed in contact and the time pressure is applied. Ordinarily, 15 to 30 seconds are sufficient.

i. *Jigs.* In many cases, the success of a cementing job depends on the design of the jig that holds the two pieces in place until the joint is set. The jig should keep the two pieces firmly together, but without forcing either of them out of shape. Figure 10-9 shows some jigs that can be used for holding the cemented parts in place until the joint hardens.

(1) Pressure. The pressure should be great enough to squeeze all air bubbles from the joint and ensure complete fusing of the cushions Also, it should be applied evenly along the joint to avoid stress concentrations at any point and maintained to compensate for the shrinkage that occurs in the joint during setting or hardening Just as the adhesive swelling action in forming a cushion causes volume to increase, so the cushion will shrink as the adhesive evaporates Excessive pressure should be avoided to prevent localized stress concentrations that cause crazing

(2) Joint slippage. When placing the assembly in a jig and at intervals thereafter, the joint should be carefully examined. If slipping is observed before the joint has set, the pressure should be readjusted or the job should be taken apart for reassembly. After the assembly has been locked in its jig, any excess adhesive and cushion that has extruded from the joint should be removed by scraping the excess onto the masking tape and then removing it.

(3) Time in the jig. If the assembly is constructed of heat-resistant acrylic plastic (MIL-P-5425), it should not be removed from its jig for at least four hours, and another four hours of aging should be allowed before it is handled or heat-treated If the assembly is constructed of craze-resistant plastic, (MIL-P-8184) it should remain in its jig for 4 hours at a temperature of 70°F (21°C) or higher. Then it should age for an additional 25 hours at room temperature or 4 hours at 150°F (66°C) before undergoing further machining or forming.

NOTE

Because both adhesive vapor and the adhesive itself can cause crazing, these assemblies must be adequately ventilated.

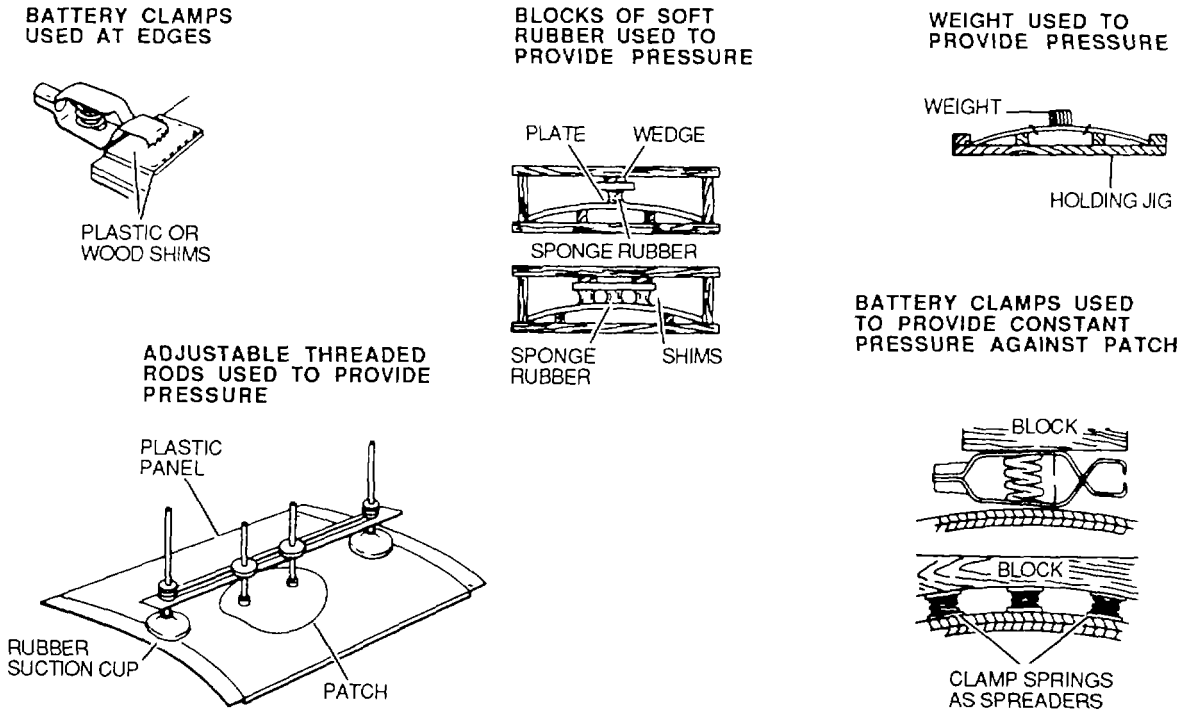

Figure 10-9. Jigs for Holding Cemented Assemblies

10-10 Curing and Heat Treatment. After heat-resistant acrylic plastics (MIL-P-5425) are assembled, they should be cured and heat-treated A solvent joint never dries completely, that is, it never becomes entirely free of the solvent. If the temperature is raised, the cushion will slowly expand until a new equilibrium is reached, as shown in figure 10-10. Upon cooling, the cushion will be larger and correspondingly harder because it contains less solvent per unit of volume. Therefore, heating a joint long enough to expand its cushion will make it much stronger

a *Temperature*. Assemblies made of acrylic plastic, MIL-P-5425, treated at 150°F (66°C) for 48 hours If this temperature causes undue dimensional changes in a complex assembly, it may be best to reduce the heat-treating temperature to 91°F (33°C) and increase the heat-treating time to 72 hours.

b *Further treatment*. The joint must be thoroughly hardened before machining, sanding, or polishing to remove the bead.

c *Annealing*. Annealing consists of prolonged heating at an elevated temperature followed by slow cooling This results in greater dimensional stability and greater resistance to crazing. In order to obtain these benefits, it is necessary that the annealing be done after all other fabrication procedures, including polishing, are completed.

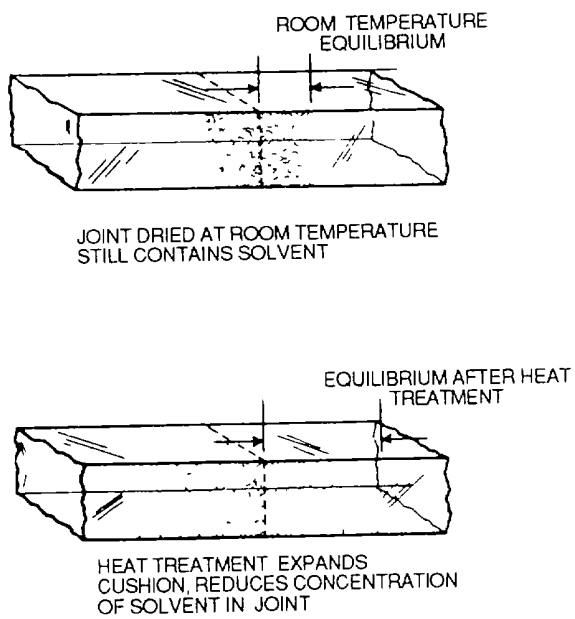

Figure 10-10. Effect of Heat Treating on a Cemented Joint

(1) Time Minimum annealing time (in hours) for acrylic plastics is given in table 10-4.

Table 10-4. Minimum Annealing Time for Acrylic Plastic

Thickness (inches)	Heating time[1] in hours in a forced circulation. air oven maintained at 176°F (80°C)
0. 060 to 0.150	10
0.187 to 0.375	10-1/2
0.500 to 0.750	11

[1] Includes time required to bring part up to annealing temperature.

(2) Cooling. Parts can be cooled by turning off oven heat or by removing to a place where they will be subjected to room temperature in still air. The parts must be cooled at an even rate, and the rate of cooling must be slower for thick sections than for thin sections

10-11 Bonding Procedures. The following paragraphs contain specific procedures for bonding both types of acrylic plastics.

a *Bonding procedures for acrylic plastic MIL-P-5425* To bond pieces of craze-resistant acrylic plastic (MIL-P-5425) proceed as follows

(1) Ensure that pieces to be joined fit accurately without forcing.

(2) Mask area around joint to protect from etching action of adhesive.

WARNING

MIL-A-8576 adhesives contain a toxic volatile liquid that will be harmful if inhaled for prolonged periods. Therefore, it must only be used with adequate ventilation and protective clothing, to include respirators. If it is accidentally spilled on the hands or skin, remove it immediately by dissolving it with solvent (ethyl or isopropyl alcohol), followed by washing with soap and water. Symptoms

of overexposure to this liquid are drowsiness, dizziness, and nausea. Treat by wrapping patient in blankets, providing plenty of fresh air, and obtaining medical assistance.

(3) Dip one of the two pieces of plastic in acrylic adhesive MIL-A-8576.

(4) Assemble the two pieces quickly, so that adhesive on surface of cushion will soften opposite dry surface of other piece.

(5) Allow the two pieces to come in contact for a short interval (15 to 30 seconds) to allow second cushion to form before applying pressure.

(6) Clamp the two pieces together under just enough pressure to assure intermingling of the two cushions. This pressure need not be great, and should be evenly distrubuted along joint.

(7) Clamp joint promptly by scraping excess adhesive and extruded cushion onto masking tape and remove tape.

(8) Allow assembly to stand in jig at least four hours.

(9) After an additional four hours, heat-treat bonded joint.

(10) Remove excess adhesive, clean and polish joint.

b. Bonding procedures for acrylrc plastic MIL-P-8184, To bond pieces of craze-resistant acrylic plastic (MIL-P-8184) proceed as follows:

(1) Sand or otherwise roughen surface of material to be bonded before application of adhesive. For best results, use 240 to 400 grit sandpaper.

NOTE

It is most important that parts fit closely before bonding.

(2) To prevent crazing during bonding, anneal transparent plastic following forming or machining and prior to and after bonding. Accomplish annealing not more than 24 hours prior to bonding.

(3) Protect area around surface to be bonded by masking with pressure-sensitive tape, Federal Specification L-T-90.

WARNING

MIL-A-8567 adhesives contain a toxic volatile liquid that will be harmful if inhaled for prolonged periods. Therefore, it must only be used with adequate ventilation and protective clothing, to include respirators. If it is accidentally spilled on the hands or skin, remove it immediately by dissolving it with solvent (ethyl or isopropyl alcohol) followed by washing with soap and water. Symptoms of overexposure to this liquid are drowsiness, dizziness, and nausea. Treat by wrapping patient in blankets, providing plenty of fresh air, and obtaining medical assistance.

(4) Apply acrylic monomer and polymer base adhesive, MIL-A-8576, to either one or both surfaces and assemble joint immediately. Hold parts together in a jig with enough applied pressure to force out air bubbles while adhesive cures.

NOTE

Adhesive will cure at temperatures of 70 ° F (21 ° C) or higher. Joints may be handled after 4 hours, but shall be allowed to cure for 25 hours at room temperatures or 4 hours at 150 ° F (66° C) before further matching or forming.

10-12. Repair Methods for Specified Defects. The repair procedures outlined in the following paragraphs apply to monolithic or laminated transparent plastics conforming to MIL-P-5425 and MIL-P-8184. There are a number of characteristics related to transparent plastics conforming to MIL-P-8184 which makes the repair procedures on it more specific than that of transparent plastics conforming to MIL-P-5425.

a. Nicks and dents. Nicks and dents may be repaired either by sanding or by means of transparent plastic plugs. Removal of nicks by sanding should not be accomplished if removal of material is greater than 10 percent of the plastic sheet thickness. Contouring should be accomplished by the use of a midget mill or an oval stone operating by rotating the mill or stone with the fingers.

b. Scratches. The following paragraphs provide procedures for repair of minor and deep scratches.

(1) Minor scratches. Minor scratches should not be disregarded since they tend to distract and cause

fatigue of flying personnel. In general, it will be found advisable to buff and polish any scratched surface section, as follows.

CAUTION

The friction created by buffing or polishing too long in one spot on acrylate base plastics can generate sufficient heat to soften the surface. This will produce visual distortion and must be avoided.

(a) Minor scratches may be removed by vigorously rubbing the affected area by hand with a soft, clean cloth using a mixture of turpentine and chalk or an automobile cleanser applied with a damp cloth.

(b) Remove the cleanser, and polish with a soft, dry cloth.

(c) Minor scratches and nicks may also be polished out using Polish Kit, part number RS-69, NSN 1560-00-450-3622.

(d) 3M Aircraft Windshield Repair Kit, part number 05114-02243, NSN 4920-01-332-1685 can be used to repair minor scratches and nicks. The repair instructions are enclosed in each kit.

(2) Deep scratches. Deep scratches cannot usually be removed by the procedure outlined for minor scratches. It may be necessary either to sand, buff, or use an alternate method.

(a) Sanding. Sand the area around deep scratches as follows:

NOTE

Acrylic plastic panels should not be sanded unless absolutely necessary.

1 Wrap a sheet of abrasive cloth, Federal Specification P-C-451, around a block, wet the cloth, and sand lightly over a wide area using a free, circular motion, as illustrated in figure 10-11. Do not confine sanding to too small an area or objectionable distortions or bull' s eyes may result in the transparent plastic.

2 Wash the sanded surface.

3 Sand with a wet sheet of 400A or finer sandpaper.

4 When the primary deep scratches are removed, the sandpaper scratches may be eliminated by the procedure described for the treatment of minor scratches.

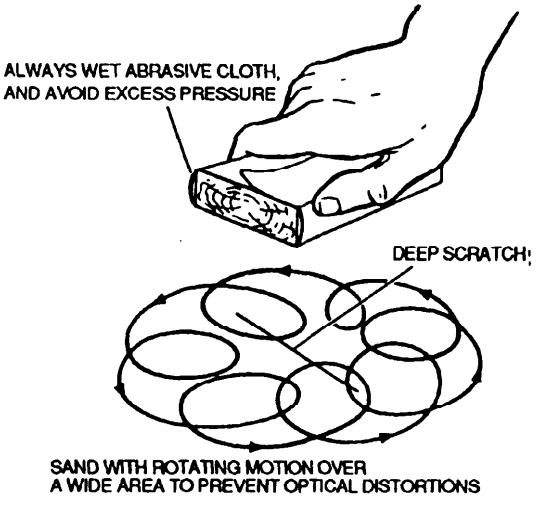

Figure 10-11. Sanding Deep Scratches

(b) Buffing. If the repair is being done at an installation where a buffing wheel is available, a more satisfactory method is to apply a preliminary polish to the deep scratches. Proceed as follows:

1 Coat a felt disc with a mixture of jeweler' s rouge and water.

2 Rotate the disc at approximately 250 rpm while lightly applying it to the surface. Ensure that the disc is kept moist.

3 After the depth of the scratches has been reduced, apply a final polish mixture of turpentine and chalk with an 8- to 10-inch diameter silk buffing wheel rotated at approximately 2000 rpm.

4 Clean the surface and apply a coat of wax.

(c) Alternate methods. The following paragraphs provide methods for repairing deep scratches.

(d) 3M Aircraft Windshield Repair Kit, part number 05114-02243, NSN 4920-01-332-1685 can be used to repair minor scratches and nicks. The repair instructions are enclosed in each kit.

1 Polish. Scratches can also be removed using Plastic Polish, part number P-P-560, NSN 7930-01-115-4744, and paper towels.

2 Varnish. When surface becomes too badly scratched to polish with a cleaning compound as indicated, and buff polishing is not practical, the surface can frequently be cleared up and transparency improved by coating with clear varnish. The atmosphere in which the varnishing is done should be kept as dust-free as possible.

c. *Crazing*. Repairable crazed areas shall be replaced by means of plug repair or reinforced by an overlay patch.

NOTE

Crazing which has penetrated the plastic sheet ply shall be classified and treated as cracks with the exceptions that stop-drilling shall not be used and horizontal component laminations shall be disregarded.

d. Cracks. Cracks may be repaired by means of transparent plastic plugs, transparent plastic overlay patches, lacing, and machine screw repairs. Lacing and machine screw repairs are temporary, and intended for emergency use only. Damaged sections should be replaced as soon as possible.

NOTE

No repairs to transparent acrylic plastics are authorized In critical-vision areas. Refer to the applicable aircraft maintenance manuals for repair requirements.

(1) Plastic plugs. See paragraph 10-13 for procedures for use of transparent plastic plugs.

(2) Overlay patches. See paragraph 10-13 for procedures for this repair method.

(3) Lacing method. A lacing method in repairing acrylic plastics is frequently employed to relieve the strain which might tend to increase the damage. This repair is shown in figure 10-12 A series of holes at intervals of one inch are drilled along each side of the crack at a margin depth of at least 1/2 Inch. The holes on opposite sides of the injury may be staggered and laced diagonally or they may be drilled directly opposite each other and the repair laced In the same manner as a boot or shoe. The latter method provides a snug, easily tightened repair and is most generally preferred. Strong flexible wire such as copper or brass lockwire is used for lacing repairs. It must be kept in mind that any such repair is temporary and intended only until better repair facilities become available.

(*4) Machine screw repair*. Select machine screws that will accommodate two flat washers and a nut. The screws should be long enough to extend all the way through the acrylic plastic. This repair Is shown in figure 10-13. Repair as follows:

(a) Drill hole at each end of the crack. Use a drill the same diameter as the machine screws.

(b) Drill a series of holes through the crack spaced about one Inch apart.

(c) Place a flat washer under the head of each machine screw.

(d) Install screws in holes. Do not install a screw in the stop holes at the ends of the crack.

(e) Install a washer and a nut on protruding end of each machine screw .

(f) Tighten nuts securely.

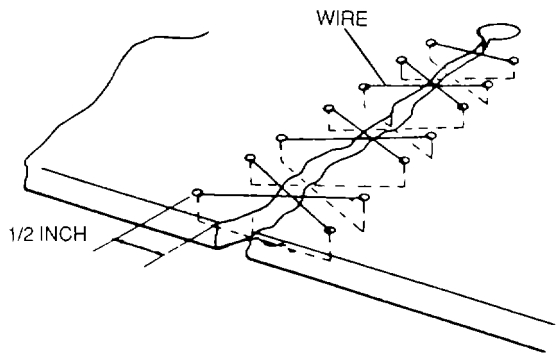

Figure 10-12. Lacing Method

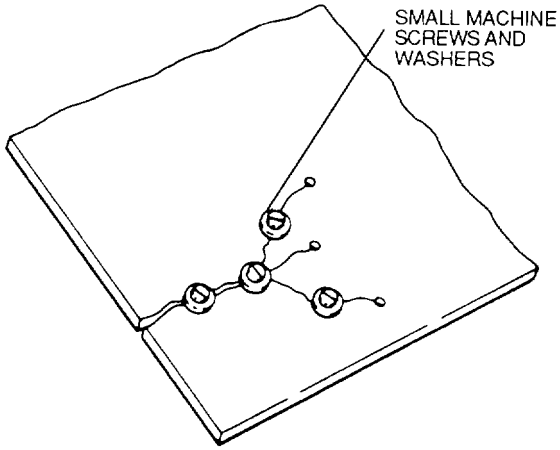

Figure 10-13. Machine Screw Repair

(*5) Machine screwpatch*. In this repair, a piece of acrylic plastic of the same type and thickness as the cracked piece is screwed over the crack as a patch. This repair Is shown in figure 10-14 Repair as follows.

(a) Cut patch material about two inches larger than damaged area.

(b) Bevel edges of patch.

(c) Select machine screws long enough to hold two flat washers and a nut, and extend through the patch and the damaged piece of plastic

(d) Drill hole at each end of the crack Use a drill of the same diameter as the machine screws.

(e) Center patch over damaged area.

(f) Secure patch in place with clamp or jig.

(g) Drill enough holes through patch and damaged piece of plastic to reinforce all fragments of crack.

(h) Place a flat washer under the head of each machine screw.

(i) Install screws in holes.

(j) Install a washer and a nut on each machine screw .

(k) Tighten nuts securely.

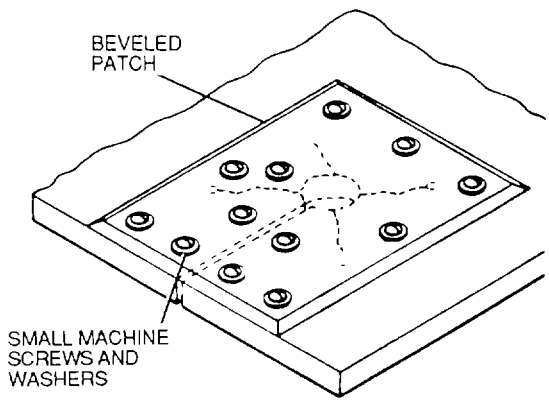

Figure 10-14. Machine Screw Patch

e. *Delamination and Discoloration*. No attempt shall be made to repair delamination or discoloration.

10-13. Patching Procedures. Patching acrylic plastics involves what may be termed three guiding principles. These are:

- The patch must fit perfectly.
- Firm, moderate pressure must be evenly applied to all edges of patch while bonding paste is drying.
- Sufficient time must be allowed to permit solvent bonding paste to thoroughly dry.

a. Transparent Plastic Plug Repair. The plastic plug shape is governed by the contour and area of damage to be repaired. Plug repair to cracks over eight inches in length will be repaired by multiple plug patches. Plug patching shall be accomplished in such a manner as to result in hairline-type outlines of the patch, insofar as possible. Instructions to accomplish plastic plug repair are as follows:

CAUTION

Do not use acetone, benzene, or lacquer thinners for cleaning, as they may craze the surface.

NOTE

The following instructions are applicable for making a plug repair on craze-resistant acrylic sheet plastic, MIL-P-8184, except difference of adhesive and bonding procedures which are outlined In paragraph 10-11.

(1) Use mild soap and cold water or cleaning and polishing compound, Federal Specification P-P-560, to clean around the area to be repaired. Use a clean, soft, grit-free cloth, sponge, or bare hands.

(2) Fabricate a hand router template from 0.250-inch thick transparent plastic sheet for milling plug cavity, as shown in figure 10-15. Make cutout in router template as large as the desired repair plug, plus an edge margin equal to distance from milling cutter edge to milling cutter shoulder. Cutout should never be closer than 1.5 inches to edge of template. Sand cutout edges smooth for guiding milling cutter shoulder.

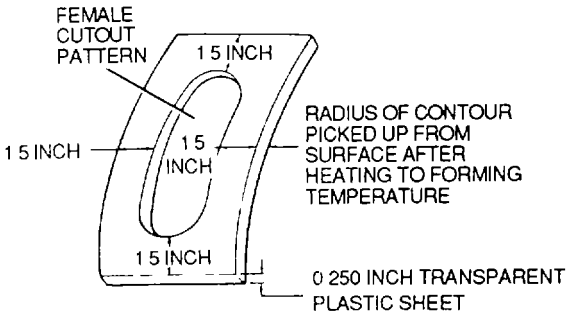

Figure 10-15. Hand Router Template for Milling Plug Cavity

(3) Position template over desired plug area and hold in place with pressure sensitive adhesive tape, Federal Specification A-A-883, or equivalent.

(4) Mill out damaged portion of transparent plastic assembly by step cuts of approximately 0.015 to 0.025 inch per cut. Use electric or pneumatic hand router and shop-made milling cutter with a 2- to 3degree draft angle and a minimum corner radius of 0.1 inch. Do not exceed maximum depth of within 0.015 inch of butyral on laminated plastic enclosures. Do not attempt to go deeper than maximum depth, even when remains of damage are visible in the remaining 0.015-inch plastic.

(5) Remove template and anneal transparent plastic enclosure as outlined in paragraph 10-10c to remove machine stresses. A plug patch should be installed within 1-1/2 hours after assembly has cooled slowly to a temperature of 70 to 90 ° F (21 to 32° C).

(6) Make a pattern for plastic plug by placing a sheet of paper over plug cavity and shading edges with a pencil.

(7) Cut plug from a sheet of the next greater thickness and type of plastic from which the assembly face sheet is made and, using pattern, shape plug with a side angle and corner radius to match plug cavity.

(8) Heat plug as prescribed in paragraph 10-10c and press into cavity, holding firmly until cool. Plug may be held in place by blocks cut to contour of transparent plastic assembly surface. Hand fit plug scraping and sanding before cementing into position.

(9) Mark a 2-inch area around plug cavity with pressure sensitive tape, Federal Specification L-T-90, or clear cellophane tape. Trim tape flush with edge of plug cavity. Apply tape in a band one or two inches wide, as closely as possible to limits of joint (1/16 inch for solvent bonding). Make certain all air bubbles between tape and plastic surface are eliminated. If these are permitted to remain, they will allow bonding paste to seep beyond joint area.

(10) When bonding heat-resistant acrylic plastic, MIL-P-5425, place transparent plastic plug in a soak tray. Tray should be made of material that will not allow the plastic plug to attach to the tray by action of adhesive. Place wire rods in soak tray on which plug or part to be bonded may rest; this will permit adhesive to contact all edges to be bonded.

WARNING

MIL-A-8567 adhesives contain a toxic volatile liquid that will be harmful if inhaled for prolonged periods. Therefore, it must only be used with adequate ventilation and protective clothing, to include respirators. If it is accidentally spilled on the hands or skin, remove it immediately by dissolving it with solvent (ethyl or isopropyl alcohol) followed by washing with soap and water. Symptoms of overexposure to this liquid are drowsiness, dizziness, and nausea. Treat by wrapping patient in blankets, providing plenty of fresh air, and obtaining medical assistance.

(11) Pour acrylic monomer base adhesive, MIL-C-8576 Type I, into tray until level with top of plastic plug. Do not soak top of plug patch; masking of this surface will be added protection from adhesive contacts.

(12) Leave plastic plug immersed in adhesive until surfaces to be bonded soften into a deep cushion. Accurate soaking time should be worked out for each bonding operation. Temperature should be 80 to 90 ° F (27 to 32 ° C) and a relatively low humidity. Do not attempt to bond transparent plastic assembly at temperatures below 65 ° F (18° C).

(13) Immediately press plastic plug into cavity and wipe along its length applying approximately 5 psi pressure to remove trapped air. Do not press hard enough to produce starving or dispersion of adhesive. A hypodermic needle may be used to inject adhesive into bond area to force out trapped air bubbles. Ten percent of plug area may contain air bubbles; however, it is not desired.

(14) Plug can be held in place by means of contour blocks and shock cord. Contour blocks may be removed in 24 hours. Allow approximately 72 hours before finishing plug surface.

(15) Complete plug repair by sanding down excess of plug extending above transparent plastic assembly surface.

(16) Anneal as outlined in paragraph 10-10c.

b. Alternate Transparent Plastic Plug Repair. This is an alternative to the previously outlined repair.

NOTE

This procedure may not be used in critical vision areas.

This repair is permissible up to 5/32 inch in depth with total area not to exceed 1 square inch within a circle of 3-inch diameter. It is further noted that the above information should not be construed to be a structural repair, but is strictly for vision improvement.

(1) Routing of gouges, nicks, and scratches should be accomplished by a tool having a radius not less than 1/2 inch.

(2) To alleviate resulting distortion of vision (cavity) methylmethacrylatic monomer may be used as a filler. Area around cavity should be masked off approximately 1/16 inch from edge with zinc chromate putty, MIL-P-8116, to form a pool with its surface approximately 1/4 inch above adjacent surface of parent material.

NOTE

When mixing casting resin, care should be taken to prevent whipping air into the resin. Mixture should be placed in a dark area for at least two hours to allow trapped air to rise to surface of container. It is mandatory that air that has risen to the surface be scraped off to prevent bubbles and obvious optical defects in casting.

(3) After resin has been poured into cavity to form pool, area should be exposed to natural sunlight or ultraviolet lamp for four to five hours to allow proper curing.

(4) Remove zinc chromate putty applied in step (2) Using power tool or file, grind raised portion of casting to blend roughly with original contour. Sand remainder of casting to final contour and polish in accordance with paragraph 10-14d

(5) Anneal completed repair to relieve polishing- and curing stresses. Wax and install protective cover over entire panel.

c. Transparent Overlay Plastic Patch. The type of transparent plastic material to use in accomplishing an overlay patch repair should be of the same type as that of the damaged transparent part. The repair, shown in figure 10-16, will be accomplished as follows:

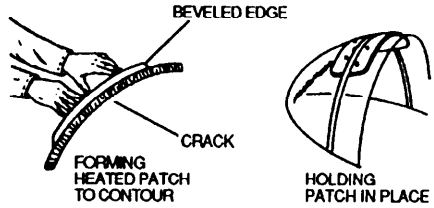

Figure 10-16. Overlay Patch to Reinforce a Crack

(1) Clean surface with approved cleaning compounds as prescribed in paragraph 10-13a. Remove all grease to ensure a perfect bond.

NOTE

Do not touch cleaned surface with fingers.

(2) Cut a patch from a sheet of acrylic plastic, MIL-P-8184,0.187- to 0.250-inch thick, large enough to cover damaged area plus an edge margin of 0.5 inch.

(3) Bevel edges of overlay patch; sand and polish edges smooth.

WARNING

Wear gloves to protect the hands while handling the hot plastic. Failure to comply may result in severe burns to the hand.

(4) Obtain desired contour when repairing damage on curved surfaces by removing protective masking paper and heating patch as specified in paragraph 10-10c. Press patch firmly against repair area surface and hold in place until patch is cool.

(5) Mask transparent plastic surface for two inches around overlay patch area to provide protection from excessive adhesive. Trim inside boundary of tape by placing overlay patch in position and cutting around its edge. Do not cut through tape enough to scribe transparent plastic. Mask outer surface of overlay patch.

(6) Clean both surfaces with aliphatic naphtha, Federal Specification TT-N-95, Type II, just prior to applying adhesive.

WARNING

MIL-A-8567 adhesives contain a toxic volatile liquid that will be harmful if inhaled for prolonged periods. Therefore, it must

only be used with adequate ventilation and protective clothing, to include respirators. If it is accidentally spilled on the hands or skin, remove it immediately by dissolving it with solvent (ethyl or isopropyl alcohol), followed by washing with soap and water. Symptoms of overexposure to this liquid are drowsiness, dizziness, and nausea. Treat by wrapping patient in blankets, providing plenty of fresh air, and obtaining medical assistance.

(7) Apply adhesive in accordance with paragraph 10-12 to the bond surface of the patch and the surfaces receiving the patch.

(8) Press overlay patch into position and, with approximately 5 psi pressure, wipe from center to edges to remove as many air bubbles as possible. Ten percent of patch area may contain air bubbles, but it is not desired. Do not press hard enough to cause a starved area. Wipe free of excess adhesive.

(9) Use pressure to hold patch firmly in place. Remove pressure after 24 hours and let repair continue to cure for a total of 48 to 72 hours.

(10) Remove masking tape and smooth rough adhesive spots along edge of patch.

(11) Anneal as specified in paragraph 10-10c.

10-14. Finishing Procedures. The finishing procedures for transparent plastics are sanding, ashing, buffing, and polishing.

a. Sanding. Because transparent acrylic plastic is relatively soft compared to glass and because it softens under the influence of heat, any sanding that is done to remove a surface blemish may result in a finish of poorer optical quality than that of untouched sheets. Therefore, transparent acrylic plastics must be handled carefully during fabrication and servicing to avoid unnecessary finishing operations. Sanding will not restore the original luster of the plastic. Sanding can be done by hand and by machine.

(1) Hand sanding. When sanding is required, the finest abrasive cloth that will remove the scratch is used first. Usually the finest abrasive cloth that can be used is that conforming to Federal Specification P-C-451.

CAUTION

Under no circumstances will sighting panels, or other critical optical parts be sanded or buffed. Sanding and buffing will destroy optical qualities. These parts will be washed with clean water and soap.

(a) Wrap abrasive cloth, Federal Specification P-C-451, around a felt-covered wooden block and rub defective area lightly using a two percent solution of soap, Federal Specification P-S-620, and water as a lubricant. Use light pressure and circular strokes.

(b) Follow initial sanding by similar treatments using successively finer grades of abrasive paper grits.

(c) Wash plastic after each sanding operation.

NOTE

Do not sand transparent plastics unless it is absolutely necessary. Hairline scratches 0.0001 inch maximum depth will be left as is, providing optical requirements are maintained.

(2) Machine sanding. The same general procedures used in hand sanding apply to sanding with power-driven sanding machines. Extremely light pressure should be used.

NOTE

Power sanders will be used except where the severity of the defect is such as to require excessive sanding. Only flat surfaces or surfaces with a radius of curvature greater than 36 inches should be so treated.

b. Ashing. An alternative to sanding is ashing, which involves the use of a thick abrasive paste on a cloth wheel. in this operation, speed and pressure are critical factors. It is essential that both be held within limits to prevent overheating of the work. As a further precaution against overheating, the plastic or the wheel should be kept in constant motion with relation to the other.

c. Machine Buffing. In order to remove scratches caused by sanding or ashing, the plastic may be machine buffed. It is often possible to remove scratches by buffing alone. Deep buffing which could result in localized heating of the sheet should be avoided. It is important that the surface of the plastic be carefully washed and allowed to dry thoroughly between successive finishing operations to prevent the transfer of coarse abrasive to buffing wheels.

(1) When buffing wheels or pads have been used before, remove any hardened tallow by running them against a metal edge, or replace.

(2) Apply a stick of inedible tallow, Federal Specification C-T-91, to buffing wheel for a few seconds, then bring bar of buffing and polishing compound, MIL-B-16909, in contact with edge of wheel for a few seconds.

(3) Apply edge of spinning wheel lightly to plastic surface. Keep it moving over surface and put only light pressure on the buffer. Buff along and across all scratches.

(4) Wipe buffing compound from plastic surface.

d. Polishing. In emergencies, when buffing equipment is not available, cleaning and polishing compound, P-P-560, can be applied by hand using a soft, damp cloth to remove light scratches and other minor imperfections.

(1) Wash area to be polished to remove dirt and grit, then rub vigorously with polish. Exercise caution not to rub too long in one place.

(2) Rub with a free circular motion over a fairly wide area.

10-15. Maintenance of Acrylic Plastic Enclosures on Army Aircraft. Vision is so vital to crew members in military aircraft that day-today maintenance of transparent enclosures is of the utmost importance. Proper maintenance procedures should be carried out thoroughly when vision is impaired due to chemical or physical actions or defects. Transparent acrylic plastic enclosures often have to be replaced because of severe crazing, apparently caused by exposure to harmful solvents or by improper handling during maintenance. The use of cleaning fluids or compounds that have not been approved is one of the most common causes of problems. The crazing action of a solvent is often delayed; that is, crazing may not appear for several weeks after the exposure to solvent or fumes. Where little or no stress is involved, at least two exposures to the solvent or fumes may occur before crazing develops. Sometimes it is impossible to determine immediately, by a simple trial, whether or not a particular cleaner will be harmful. The utmost care in the maintenance of transparent plastic enclosures must be taken to ensure continued serviceability.

a. Cleaning. Procedures for cleaning exposed surfaces are as follows:

NOTE

Transparent acrylic plastics should be cleaned in a cool, shady area. To avoid scratching the surfaces of transparent acrylic plastic, rings should always be removed from fingers before cleaning.

(1) Exterior surfaces. Exterior surfaces are cleaned as follows:

(a) Flush surface with plenty of water using bare hands to detect and gently dislodge dirt, sand, or mud.

(b) Wash surface with mild soap and water that contain no harmful abrasives. A soft cloth sponge or chamois may be used in washing, but only to apply soapy water onto the plastic. Go over the surface with bare hands to quickly detect and remove any remaining dirt before it scratches the plastic. Rinse with clear water.

(c) Dry with a clean, damp chamois, a soft, clean cloth, or soft tissue. Do not continue rubbing transparent acrylic plastic after it is dry.

NOTE

Do not rub the plastic with a dry cloth. This not only causes scratches, but may build up an electrostatic charge that attracts dust particles. If the surface becomes charged, patting or gently blotting it with a damp clean chamois will remove both the charge and the dust.

Never use a coarse or rough cloth for cleaning. Cheesecloth is not acceptable.

(d) Clean transparent acrylic plastic using polish and cleaner and a soft, clean cloth. If polish and cleaner are not available, rinse the surface thoroughly with clear water (distilled, if possible) in a shaded area.

(2) Interior surfaces. Interior surfaces are cleaned as follows:

(a) Dust acrylic plastic surface lightly with a soft, clean cloth saturated with clean water.

(b) Wipe surfaces carefully with a soft cloth or sponge. Keep the cloth or sponge free from grit by rinsing it frequently with clean water. Do not use a dry cloth.

(c) Clean transparent acrylic plastic using polish and cleaner and a soft, clean cloth.

b. Polishing. If the acrylic plastic has scratches on it after removing dirt and grease, the scratches may be removed as described in paragraph 10-12.

c. Waxing. If not many scratches are visible after removing dirt and grease, the acrylic plastic should be waxed with an approved wax that will fill in minor scratches and help prevent further scratching. It should be applied in a thin, even coat and rubbed in with a soft, dry cloth to achieve a high luster.

d. Hot Climate Precautions. When the transparent acrylic plastic enclosures of a parked aircraft are exposed to the direct rays of hot sunlight, they may absorb sufficient heat to soften and distort the plastic enclosure. This is known as thermal distortion. When exposed to the sun, these enclosures may receive heat directly from three sources.

- The sun' s rays produce heat that is absorbed by transparent acrylic plastic; thus, the plastic can become considerably hotter than the surrounding air inside or outside the aircraft.
- The air inside an unshaded and unventilated aircraft will transmit the heat radiated by the metal members in the aircraft to the plastic by convection.
- In some cases, fabric covers are used over transparent acrylic plastic enclosures. These covers tend to absorb heat, causing the enclosure to heat up to a temperature higher than what it would be without the cover because the air does not circulate. Transparent plastic enclosures must not be covered except for protection against windblown sand and grit or when ground temperature is above 120 ° F (49° C).

The following paragraphs describe precautions that should be taken to prevent thermal distortion.

(1) Temperature below 100 ° F (38° C). When the surrounding air temperature is below 100 ° F (38° C), no special precautions are necessary except to make sure that when covers are used no part of the cover will come in contact with the transparent acrylic plastic.

(2) Temperature between 100 and 120 ° F (38 to 49° C). When the surrounding air temperature is between 100 and 120 ° F (38 to 49° C), enclosures should be open enough to permit air to circulate freely through the aircraft and under the enclosure. If a canopy cover is needed to protect the transparent enclosure from windblown sand or grit, the cover should not come in contact with the transparent plastic surfaces.

(3) Temperature above 120 ° F (49° C). When the surrounding air temperature is above 120 ° F (49° C), the enclosure must be opened and protected from the sun by a suitable cover that does not come in contact with the transparent acrylic plastic. If possible, the aircraft should be parked in the shade.

NOTE

When removing enclosure covers, lift them off because sliding them can cause abrasion of the acrylic plastic surface.

e. Cold Climate Precautions. During extremely cold weather, transparent plastic enclosures will be more brittle than at normal temperatures. Exercise care when near them that they are not inadvertently struck. When preheating an aircraft prior to flight, do not apply heat directly to plastic surfaces because crazing, cracking, and discoloration may develop. Before removing the aircraft from a heated hangar, open all windows to prevent cracking.

10-16. Recommended Installation Procedures for Transparent Plastics. There are several methods of installing transparent acrylic plastic panels in aircraft. The method used by the manufacturer will depend on the position of the panel on the aircraft, the stresses it will be subjected to, and many other factors. When installing a replacement panel, the airframe repairman should use, whenever possible, the same mounting method that was used by the manufacturer of the aircraft.

a. Installation Considerations. Several different factors must be considered when acrylic plastic panels are being installed.

(1) Hardware. When it is difficult to install replacement panels using rivets, bolts may be substituted for them provided that the original strength requirements of the manufacturer are met and the bolts do not interfere with adjoining equipment.

(2) Panel fit. In some cases, replacement panels will not fit the installation exactly. When a replacement panel requires adjustment, the original design drawing, if available, should be consulted to determine the proper clearances.

NOTE

Never force a transparent panel out of shape to make it fit a frame. If a replacement does not fit easily into the mounting, obtain a new replacement or sand the panel sufficiently to obtain exact size and to conform to the mounting frame.

(3) Masking material. Fitting and handling should be done with masking material in place. The plastic should not be scribed through the masking material, which should be removed from the edges of transparent materials that will be covered or used for attachment.

(4) Stresses. Transparent acrylic plastics are likely to craze when subjected to heavy stresses. Therefore, they must be mounted and installed in such a way as to avoid these stresses.

(5) Heating. Panel areas must not be reheated and reformed because local heating methods are likely to be too superficial to reduce stress concentrations.

b. Expansion and Contraction Allowances. Because transparent acrylic plastics expand and contract about three times as much as metal parts, suitable allowances must be made for changes in dimensions with rising and falling temperatures. Table 10-5 gives expansion and contraction allowance.

c. Bolt and Rivet Mounting. On pressurized aircraft, bolt and rivet installations that go through the transparent acrylic plastic will not be used. On unpressurized aircraft, when channel and clamp mountings would be impractical, holes may be drilled in the plastic for bolt and rivet installation. These installations are adequate, but should be used only when other methods are impossible. Because of the difficulties experienced when installing mountings with rivets, bolt mountings are preferable.

NOTE

In bolt installations, spacers, collars, shoulders or stop-nuts should be used to prevent tightening the bolt excessively. Whenever such devices are used by the aircraft manufacturer, they should be retained in the replacement installations.

Table 10-5. Expansion and Contraction Allowances[1]

Dimension of panel[2] in inches	Dimensional allowance (inches) * [23] Required for expansion from 77 ° F (25° C) to 158 ° F (70° C)	Required for contraction from 77 ° F (25° C) to -67 º F (-55° C)
12	0.031	0.050
24	0.062	0.100
36	0.093	0.150
48	0.124	0.200
60	0.155	0.250
72	0.186	0.300

[1] Where the configuration of a curved part is such as to alter dimensional measurements by change of contour, the allowances may be reduced because this will not result in localized stress.

[2] For dimensions other than those listed, use necessary clearance.

[3] Installations that permit linear change at both ends require one-half the indicated clearances.

(1) Genera/practices. A typical bolt installation is shown in figure 10-17. To assure long service, special consideration should be given the following factors:

- Use as many bolts or rivets as practical.
- Distribute the total stress as equally as possible along these bolts and rivets.
- The holes drilled in the plastic should be sufficiently larger than the diameter of the bolt to permit expansion and contraction of the plastic relative to the frame.
- The holes in the plastic should be concentric with the holes in the frame so that the greater relative expansion of the plastic will not cause binding at one edge of the hole.
- Use oversize tube spacers, shoulder bolts or rivets, cap nut, or some other device to protect the plastic from direct pressure.

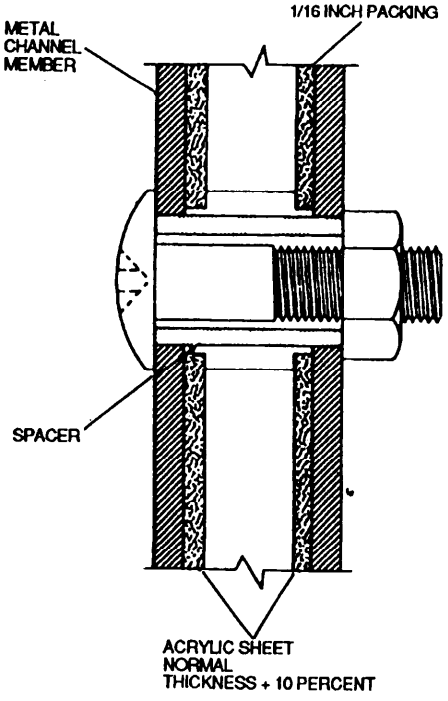

Figure 10-17. Typical Bolt Installation

NOTE

Ensure that holes drilled in acrylic plastic sheets are smooth and completely free from any nicks or roughness.

(2) Synthetic fiber edge attachments. Modern edge attachments to transparent plastic assemblies are made of synthetic fibers specially impregnated with plastic resins. The most commonly used fibers are glass, orlon, nylon, and dacron.

(3) Laminated edge attachments. Reinforced laminated edge attachments are the preferred type of attachment, especially when mounting bolts or rivets. The edges distribute the load more evenly and reduce failures caused by differential thermal expansion. Laminated edge attachments can be mounted by any of the above methods, with any necessary holes being drilled through the edge attachment material and not through the transparent plastic. This is the best method for mounting a laminated edge attachment. The slotted holes allow differential thermal expansion. Typical laminated edge attachments are shown in figure 10-18 through 10-19.

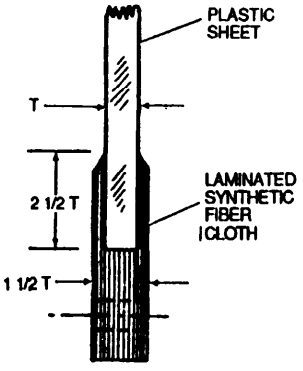

Figure 10-18. Approved Edge Attachment for Monolithic Enclosure

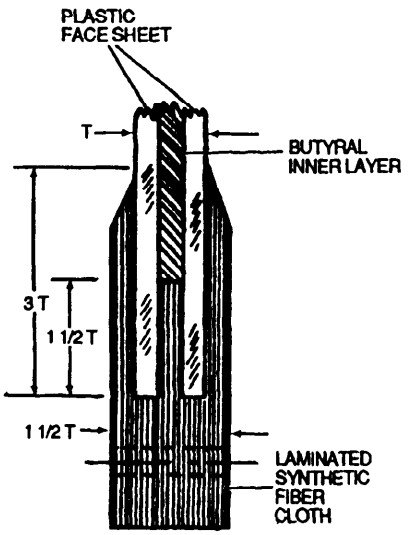

Figure 10-19. Approved Edge Attachment for Laminated Enclosure.

10-17. Glareshield Repair. The following procedures are used to repair aircraft glareshield cracks using Polyfix (Trade Mark), LB-1800, Repair Kit.

WARNING

Do not inhale fumes which are generated by the curing reaction of the repair materials. Use Polyfix (Trade Mark), LB-1800, Repair kit in a well ventilated area.

Apply Polyproof (Trade Mark) to hands and wear surgical gloves or finger cots while performing repair procedures. Glue bonds instantly to unprotected skin.

Use goggles or face shield while performing repair procedures.

CAUTION

Use protective shielding on windshield to protect windshield while sanding.

a. Clean 1 inch area surrounding crack thoroughly and carefully using a clean cloth moistened with lacquer thinner, Federal Specification TT-T-291. Allow cleaned area to dry completely.

b. Lightly sand edges of cracks using 90 grit sandpaper if cracks are raising above glareshield. The glareshield must be free of dust.

c. Spray repair area with accelerator. Cut off tip of Polyglue (Trade Mark) bottle and apply light amount of Polyglue (Trade Mark) to damaged area. Mist damaged area with accelerator.

d. Any crack deeper than 1/4 inch deep must be filled with chopped fiberglass mat, in the LB-1800 Repair Kit, until crack is no more than 1/4 inch deep.

e. Pack Polydust (Trade Mark) into crack until Polydust (Trade Mark) is level with Glareshield.

f. Apply Polyglue (Trade Mark) until completely saturated and level with surface. Wipe off any excess Polyglue (Trade Mark) and let glue cure. Repeat procedure if crack is not completely filled or if there are any voids.

g. Sand filled crack with 150-250 grit sandpaper until crack is level with glareshield surface.

h. To fill any small pits that may have developed while sanding, apply a small amount of Polyglue (Trade Mark) on repaired area. Allow glue to cure.

i. Sand repaired area with 150-250 grit sandpaper until level with surrounding area.

j. Use the general painting instructions in TM 55-1500-345-23, Painting and Marking of Army Aircraft, to paint glareshield.

CHAPTER 11

REBALANCING MOVABLE SURFACES

11-1. General. When repairs on a control surface add weight fore or aft of the hinge centerline, the surface must be rebalanced. any control surface that is out of balance will be unstable and, therefore, will not remain in a streamlined position during normal flight. Such a condition can cause unexpected and violent maneuvers of the aircraft. In extreme cases, fluttering and buffeting can develop to a degree that could cause the complete destruction of the aircraft. If a movable control surface is to function properly, it must be in both static and dynamic balance. The instructions in this chapter are general in nature. For balancing control surfaces on a specific aircraft, refer to the applicable aircraft manual.

11-2. Surface Balance Considerations. Items to consider when balancing control surfaces are static balance, dynamic balance, and a knowledge of the appropriate terms and symbols.

a. Static Balance. Static balance is the tendency of an object to remain stationary when supported from its center of gravity. The two conditions in which a control surface can be out of static balance are underbalance and overbalance.

(1) Underbalance. When a control surface is mounted on a balance stand, a downward travel of the trailing edge below the horizontal position is evidence of underbalance. Some manufacturers indicate this condition with a plus (+) sign. Figure 1-1, detail A, shows this underbalance condition.

(2) Overbalance. An upward movement of the trailing edge above the horizontal position indicates overbalance (see figure 11-1, detail B). This is designated by a minus (-) sign. These signs show the need for either increased or decreased weight in the correct area to achieve a balanced control surface (see figure 11-1, detail C).

(3) Flight performance. A tail-heavy condition (static underbalance) causes undesirable flight performance and is not usually considered safe. A nose-heavy condition (static overbalance) results in more acceptable flight performances.

b. Dynamic Balance. Dynamic balance in a rotating body is that condition where all the rotating forces are internally balanced so that no vibration is produced while the body is in motion. Dynamic balance in relation to control surfaces is an effort to maintain balance when the surface is subjected to movement; for example, when the aircraft is in flight. It involves putting weights in the correct places along the span of the surface. In Almost all cases, the weight will be located forward of the hinge centerline.

c. Terms and Symbols. A knowledge of the following terms and symbols and their meanings will help the airframe repairman gain a better understanding of the procedures used for balancing, solving formulas, and locating reference points.

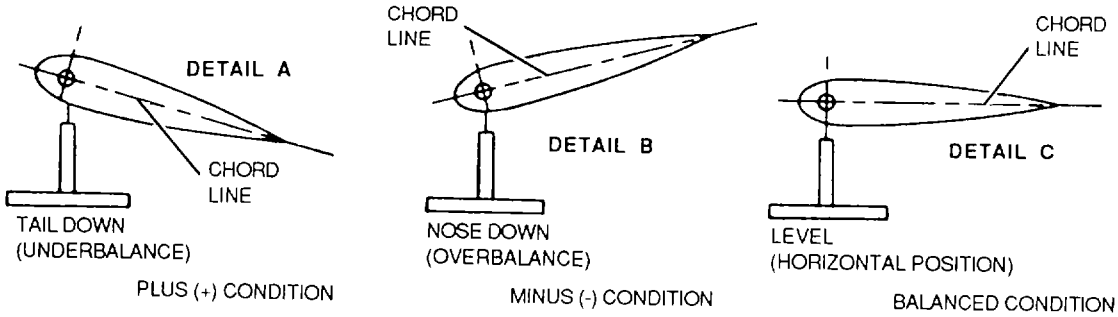

Figure 11-1. Control Surface Static Balance

(1) Weight reaction (W_R). This is the gross or calculated weight used in formulas to obtain a balanced condition in a control surface unit or individual component. It is expressed and recorded to the nearest hundredth of a pound and obtained with the chord line in a horizontal position. Weight reaction may also be defined as the force (in pounds) that is exerted on the control surface to cause it to move in a clockwise or counterclockwise direction. Figure 11-2 shows that weight reaction is the weight reading of the scale (in pounds) as the trailing edge of the control surface exerts pressure on the adjustable support and scale plate.

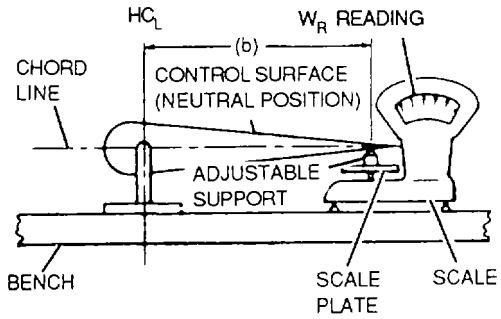

Figure 11-2. Identification of Terms and Symbols

(2) Control surface assembly weight (W_S). This is the total weight of a control surface assembly. For example, to determine the total weight of an elevator and its assembly, the weight of the trim tab assembly, trim tab control pushrod, hinges, bearings, and their attaching parts must be included.

(3) Weight (W). This is the weight of an individual part of a control surface unit, such as the trim tab, trim tab control pushrod, hinge, and so on.

(4) Panel weight (W_P). This is the actual weight of a completely balanced panel, including the aft hinge pin and retainer and the forward fabric seal.

(5) Center of gravity (CG). In control surface balancing, the center of gravity is that point at which the control surface may be balanced in any position. It is also the point of load concentration.

(6) Hinge centerline (HC_L). This is the axis about which the control surface rotates, as shown in figure 11-2.

(7) Minus or negative sign (-). A minus or negative sign preceding a WR value indicates that the leading edge tends to move in a downward direction while the control surface moves in an overbalanced condition.

(8) Plus or positive sign (+). A plus or positive sign preceding a WR value indicates that the trailing edge tends to move in a downward direction when the control surface is in an underbalanced condition and that the unit must be rebalanced to limits as specified in the applicable aircraft manual.

(9) The symbol or letter b. This represents the distance from hinge centerline to weight reaction at the point of the adjustable support or weight. It is known as the moment arm b. This distance is measured and expressed, and its value recorded, to the nearest hundredth of an inch (see figures 11-2 and 11-3).

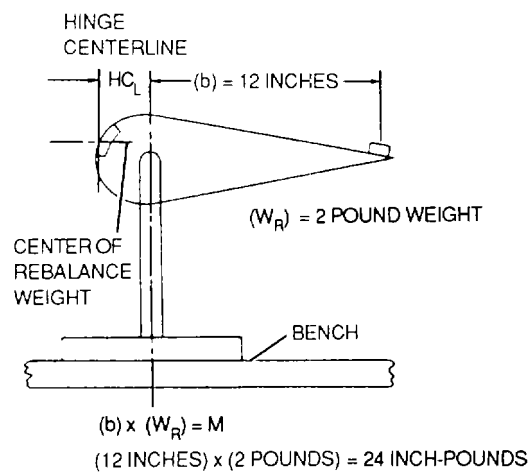

Figure 11-3. Effects of Weight and Distance

(10) The symbol or letter c. This represents the distance measured from the hinge centerline to the center of the balance weight. This distance is also measured and expressed, and its value recorded, to the nearest hundredth (see figure 11-3). Normally, this distance will be forward of the hinge centerline.

(11) Moment (M). This is the term applied to the combination of force (weight) and distance. Moment is also defined as the touching of a force to cause rotation about a given axis. A simple example is that of a force being applied with a wrench when turning or tightening a nut. Moment is shown in figure 11-3 as (b) x (W_R).

11-3. Balancing Principles. The principles involved in balancing or rebalancing control surfaces are not very hard to understand if some simple comparison is presented. For example, a child' s seesaw that is out of balance may be compared to a control surface that does not have balance weights installed, as shown in figure 11-4. From this illustration, it is easy to see how a control surface is naturally tail-heavy. To correct this, weights are added either inside the control surface or on its leading edge. When this is done properly, a balanced condition exists that may be compared to the seesaw with a child sitting on the short end of the plank.

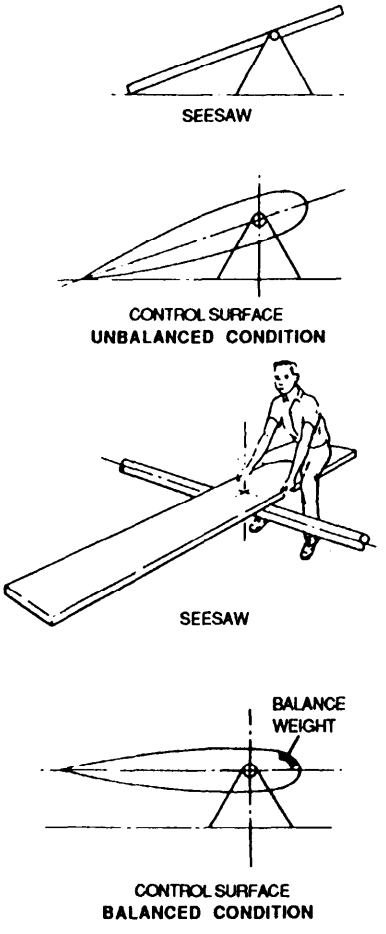

Figure 11-4. Unbalanced and Balanced Conditions

a. Effects of Moments. The effects of moments on control surfaces can be easily understood by observing and studying more closely a seesaw that seats two children of different weights in different positions. Figure 11-5 shows a seesaw with an 80-pound child seated six feet away from the fulcrum point of the seesaw. The weight of the child tends to rotate the seesaw until it touches the ground. To bring the seesaw into a level or balanced condition, the other child must be seated on the opposite end of the seesaw. To equalize the moment of the first child seated on the short end of the seesaw, the second child would have to sit at a certain exact distance to the other side of the fulcrum point and weigh neither more nor less than a certain exact amount.

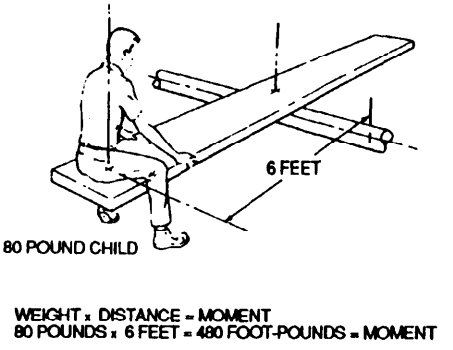

Figure 11-5. Moment

b. Effects of Weight and Distance. Assuming that this second child is placed eight feet to the right of the fulcrum point, a simple formula may be used to determine exactly how much the child would have to weigh to balance the seesaw or bring it to a level condition.

(1) Formula. To produce a balanced condition of the seesaw (or control surface), the counterclockwise moment must equal the dockwise moment. Because moment is found by multiplying weight times distance, the formula to balance the seesaw is $W_2 \times D_2 = W_1 \times D_1$, where:

W_2 = Unknown weight of the second child

D_2 = Distance from the fulcrum that the second child is seated (8 feet)

W_1 = Weight of the first child (80 pounds)

D_1 = Distance from the fulcrum that the second child is seated (6 feet)

To find the weight of the second child, simply substitute and solve the formula as follows:

$$W_2 x D_2 = W_1 x D_1$$

$$W_2 x 8 = 80 x 6$$

$$W_2 = \frac{480}{8}$$

$$W_2 = 60$$

Thus, the second child would have to weigh 60 pounds to balance the seesaw.

(2) Use on control surfaces. The same effect that is obtained by adding the second child on the seesaw is also obtained in a control surface by adding the weights forward of the hinge centerline. Most repairs to control surfaces are aft of the hinge centerline, which results in a trailing-edge-heavy condition. The correct balance weight must be calculated and properly placed.

11-4. Surface Rebalancing Procedures. Repairs to a control surface or its tabs usually increase the weight aft of the hinge centerline. This requires static rebalancing of the control surface system and the tabs.

a. Requirements. The following paragraphs describe requirements for correctly rebalancing a control surface.

(1) Control surface removal. Control surfaces to be rebalanced should be removed from the aircraft and supported from their own points on a suitable stand, jig, or fixture, as shown in figure 11-6.

(2) Attaching parts. Any trim tabs or other assemblies that are to remain on the control surface during balancing procedures should be in position. Also, if applicable aircraft manuals specify that any assemblies or parts must be removed before balancing, that should be done.

(3) Stand requirements. The stand must be level and located where it will not be affected by air currents, and control surface must be able to rotate freely about the hinge points without binding. Balance condition is determined by the behavior of the trailing edge when the control surface is suspended from its hinge points. Any excessive friction would result in an incorrect reading of the overbalance or underbalance control surfaces.

(4) Control surface position. When installing a control surface in a stand or jig, a neutral position should be established in a chord line direction, as shown in figure 11-7. The chord line direction of any control surface is the distance or travel from the leading edge to the trailing edge. Sometimes only a visual check is needed to determine whether the surface is balanced or unbalanced. A bubble protractor (set at the correct angle specified in the applicable maintenance manual) should be used to determine the neutral position before balancing procedures are continued. If a bubble protractor is not available, the neutral position may be found by simply placing the control surface to the left or the right in relation to a center balance.

b. Methods. The four methods of balancing or rebalancing control surfaces are commonly called the calculation, scale, trial weight, and component methods.

NOTE

To use the calculation method, the airframe repairman must know the weight of the material removed from the repair area, and the material used to make the repair.

(7) Calculation method. The calculation method of rebalancing a control surface is directly related to the balancing principles described in paragraph 11-3b(1). The advantage it has over other methods is that it can be used without removing the control surface from the aircraft.

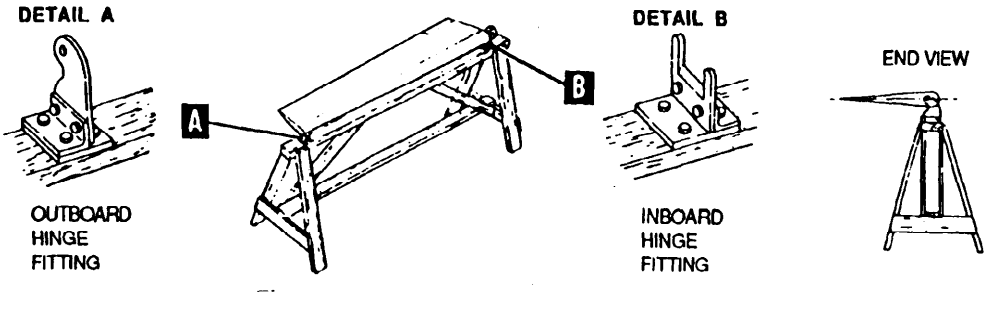

Figure 11-6. Field-Expedient Balancing Jig

(a) Measure the distance from the center of the repair area to the hinge centerline. This distance must be measured parallel to the chord line of the surface, as shown in figure 11-8, and determined to the nearest hundredth of an inch.

(b) Multiply the distance by the weight of the repair. The resulting product will be in inch-pounds.

(c) Consult the applicable aircraft manual to identify any further actions that need to be taken. If the result of the calculations in inch-pounds is within specified tolerances, the control surface is considered balanced. If it is not within specified limits, the appropriate technical manual will specify the weights that must be added, the material to use for them, the design for the manufacture and the places where they are to be installed.

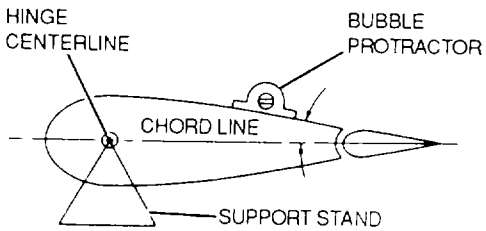

Figure 11-7. Establishing Neutral Position of a Control Surface.

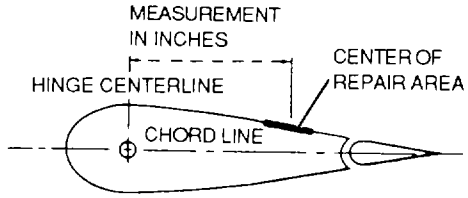

Figure 11-8. Calculation Method.

(2) Scale method. The scale method of balancing a control surface requires the use of a scale graduated in hundredths of a pound, as well as a support stand and balancing jigs for the surface. Figure 11-9. shows a control surface mounted for rebalancing.

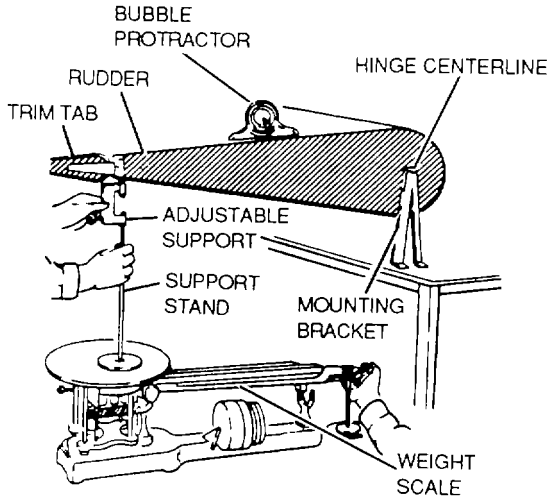

Figure 11-9. Scale Method.

(a) Remove the control surface from the aircraft. The applicable aircraft manuals should be consulted to identify removal procedures and which parts or assemblies will be left attached to the surface.

(b) Install the control surface on the stand in a neutral or level position. A bubble protractor set at the correct angle (as specified for that particular control surface by applicable manuals) should be used to make sure that the chord line is in a horizontal position.

NOTE

- **Because the adjustable support is placed on the scale, its weight must be included in calculations when obtaining weight reactions. This may be done either by weighing the adjustable support fixture separately and subtracting its weight from the total weight reaction or by setting the scale at zero after mounting the adjustable support fixture.**
- **Because most repairs to control surfaces are made aft of the hinge centerline, they will normally exert a downward force upon the support stand scale. Refer to the applicable aircraft maintenance manual to determine exactly where to place the support stand.**

(c) To counteract the unbalanced condition, add weight as required to the forward section of the control surface. Refer to the applicable aircraft maintenance manual for the size, material, and position of the required weights.

(3) Trial weight method. The trial weight method is a means of balancing a surface with a known weight. The weight is positioned chordwise on the surface to obtain a level chord line.

(a) Place the control surface in a jig or support stand and check for friction-free rotation around the hinge point.

(b) Refer to the applicable aircraft maintenance manual for the weight value to be used for the specific type of control surface.

(c) Determine the limits (along the chord line of the surface) between which the selected weight will be placed to balance the surface. These can also be found in the applicable aircraft maintenance manual.

(d) Place the selected weight in the specific location on the surface to determine whether it will balance the control surface.

(e) If the procedures described in (c) and (d) result in a balanced control surface, no further action is necessary.

(f) If the control surface is still not in a balanced condition following these procedures, place additional weights on the opposite side of the hinge centerline. The selected material may be placed anywhere that is available.

(g) When enough material has been added to balance the surface, weigh the material and mark its location.

(h) Obtain the weight either through supply or local manufacture, and place it in the marked location.

(i) Install the weight using any available fastening devices.

(4) Component method. The component method of rebalancing is a combination of the scale and calculation methods. Each component must be balanced by itself. It then maintains a specified moment (weight reaction) surrounding the hinge centerline of the surface. Control surface installations made up of these components must be balanced within limits specified in the applicable aircraft manual. All components balanced by this method are considered compatible with other components on other complete units of the same type.

c. Addition of Weights. After the required rebalance weights have been calculated, they must be fabricated and properly installed. These weights may be made of fan steel, lead, arch bronze, corrosion-resistant steel, or 4130 steel. The applicable aircraft manual will normally give the exact dimensions and material to be used for local manufacture of weights needed to balance control surfaces. In many cases, the location and amount of clearance required will determine the size and material of the weight. The weights of some metals widely used in fabrication are as follows:

- Lead..... 0.41 pounds per cubic inch
- Fan Steel ..... 0.602 pounds per cubic inch
- 4130 Steel..... 0.28 pounds per cubic inch
- Corrosion-resistance steel ..... 0.31 pounds percubic inch

CHAPTER 12

SPOTWELDS

12-1. General. Spot-welding is a process in which fusing is produced by the heat obtained from resistance to the flow of electric current through the workpieces, which are held together under pressure by electrodes. The size and shape of the individually formed welds are limited primarily by the size and contour of the electrodes. Spot-welding is used most often in thin sheet metal construction and has many applications in this type of work. This chapter deals with the repair of failed spotwelds. For welding procedures, refer to TM 1-1500-204-23-3.

12-2. Drilling Spotwelds. The removal of spotwelded surfaces can be accomplished by the following procedures (see figure 12-1).

a. Center punch dimple to locate position for drill point.

b. Drill a clearance hole corresponding to the rivet size to be used.

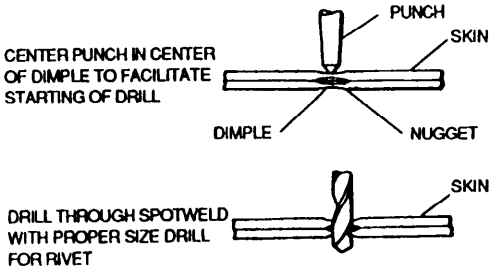

Figure 12-1. Drilling Spotwelds

NOTE

Drilling described in paragraph b will not completely remove the spotweld nugget.

12-3. Shearing Spotwelds. Insert a chisel, similar to that shown in figure 12-2, between the sheets on the centerline of the spotweld nugget. Strike chisel lightly with a hammer to shear off the remainder of the nugget (see figure 12-3).

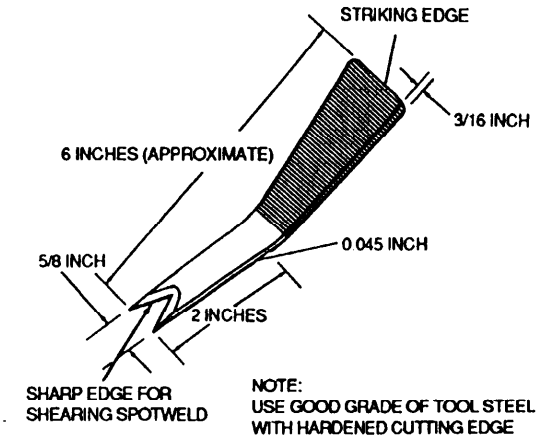

Figure 12-2. Spotweld Shearing Chisel

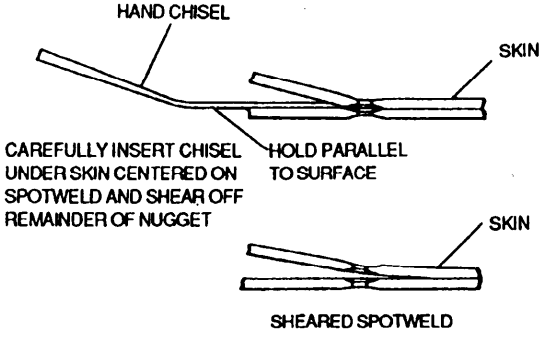

Figure 12-3. Shearing Spotwelds

12-4. Spotweld Failure. In cases where a spotweld fails and the skin separates from the structure leaving a button (or the nugget portion of the skin) on the framing member, proceed as follows:

a. Mill the button off with a counterbore, as shown in figure 12-4. Refer to table 12-1 for the bore size.

b. Center punch dimple on opposite side of counterbore.

c. Drill through dimple to counterbore as shown in figure 12-4. Refer to table 12-2 for drill sizes.

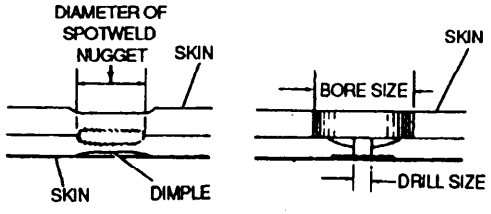

Figure 12-4. Drill and Bore Locations.

Table 12-1. Counterbore Dimensions.

Sheet gauge	Diameter of nugget	Bore size
0.016	1/8	1/4
0.020	9/64	1/4
0.025	5/32	1/4
0.032	3/16	1/4
0.040	7/32	1/4
0.045	15/64	1/4
0.051	1/4	1/4
0.064	9/32	3/8
0.072	19/64	3/8
0.081	5/16	3/8
0.091	11/32	3/8
0.109	3/8	3/8
0.125	3/8	3/8

Table 12-2. Drill Sizes.

Rivet	Drill number
3/32	41
1/8	30
5/32	22
3/16	21

d. Prepare a spacer of the same gauge as the skin and install as shown in figure 12-5. Ensure that the diameter of the spacer does not exceed 3/8 inch in diameter.

e. Prepare a washer at least six times the diameter of the rivet. Bevel the edge to 0.064 inch, and countersink the washer for a rivet as shown in figure 12-5.

f. Install the rivet in accordance with standard riveting practices.

12-5. Spotweld Failure with No Skin Breaks. Where spotwelds fail or shear and there are no cracks or breaks visible on spotweld dimples, tap area of skin with a hammer until two surfaces have been brought solidly together. When this cannot be accomplished, remove portion of skin break, using a flush patch procedure.

12-6. Spotwelded Parts Repair. Following are specific requirements for repairs of spotwelded structures.

a. Acceptable Spotweld Spacing. Figure 12-6 shows acceptable edge distances and spacing for spotwelds in aluminum, steel, and magnesium.

b. Allowable Percentage of Defective Spotwelds. Refer to table 12-3 for the allowable number of certain specific defects within an area.

c. Repair of defective Spotwelds Exeeding Allowable Percentage. Table 12-4 shows the minimum rivet diameters and types for repairs of defective spotwelds.

d. Preparing Materials for for Spotwelding. Sheet metal can be prepared for spotwelding as follows:

(1) Degrease parts to be spotwelded in a vapor degreaser using cleaning compound, MIL-C-5543 (4 to 6 ounces per gallon) or Federal Specification P-C-437.

(2) Rinse with cold water and dry.

NOTE

Since alkalume deoxidant and diversey alkaline deoxidant are acid materials, a stainless steel tank, type 316 or A Koroseal-lined tank is recommended when mixing these deoxidants with water.

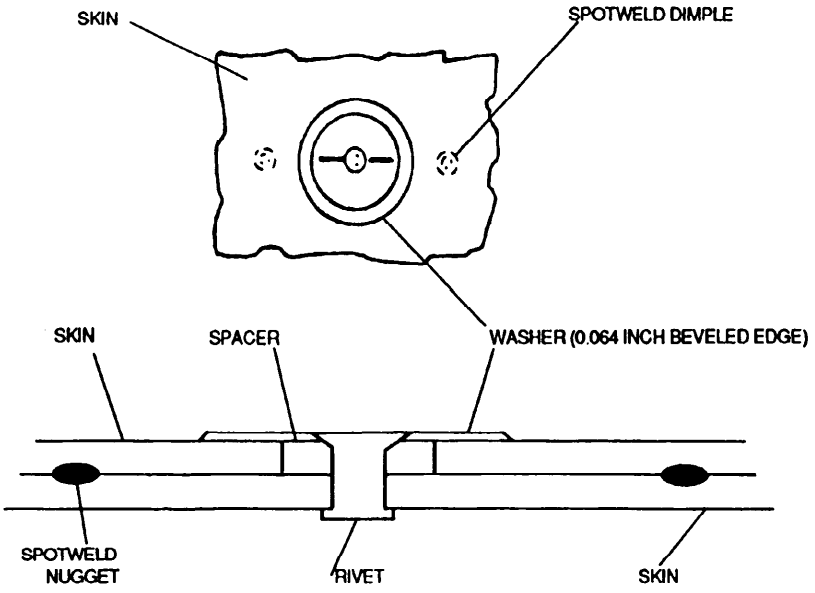

Figure 12-5. Repair of Sheared Spotwelds

(3) Remove oxide by dissolving alkalume deoxidant (4 ounces per gallon), or Diversey alkaline deoxidant Number 514 (1 pound per gallon) (NSN 6850-01-193-9837), or equivalent, in water at room temperature (70-80° F (21-27° C)).

(4) Immerse degreased parts into solution for not less than 6 minutes.

(5) Rinse well with fresh, cold water, paying particular attention to seams, blind holes, or other pockets. Remove excess water from these areas with clean, compressed air at 20 psi.

(6) Air-dry parts and weld.

e. Repair for Short Distance and Broken Spotwelds. Figure 12-7 shows an application where edge distances are short. The following paragraphs provide guidelines for performing this kind of repair.

NOTE

These repairs are not applicable in Class A welding with two or more members where an end connection contains more than one spotweld, but less than five.

(1) Class of welding. The examples of structure shown in figure 12-7, containing two or more parts to a joint, are associated with Class A welding. Class B welding is associated with a single part of a joint.

(2) Aluminum alloys. Spotwelding of aluminum alloys should be accomplished within 24 hours after cleaning.

(3) Replacing spotwelds. Defective spotwelds at the beginning and end of a row should be replaced with rivets.

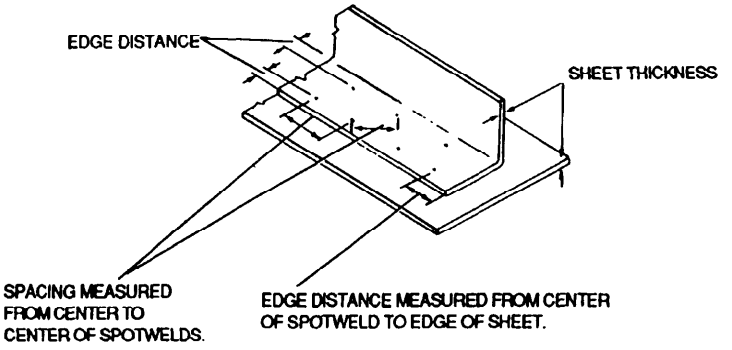

	ALUMINUM		STEEL		MAGNESIUM	
MINIMUM THICKNESS OUTSIDE SHEET	MINIMUM EDGE DISTANCE	MINIMUM SPACING	MINIMUM EDGE DISTANCE	MINIMUM SPACING	MINIMUM EDGE DISTANCE	MINIMUM SPACING
0.012	0.15	0.31	0.15	0.31	0.15	0.31
0.016	0.19	0.38	0.19	0.38	0.19	0.38
0.020	0.19	0.38	0.19	0.38	0.19	0.38
0.025	0.22	0.38	0.22	0.38	0.22	0.45
0.030	0.25	0.38	0.25	0.40	0.25	0.55
0.032	0.26	0.40	0.25	0.45	0.25	0.60
0.040	0.28	0.44	0.28	0.50	0.28	0.62
0.050-0.051	0.31	0.50	0.31	0.55	0.31	0.70
0.063-0.064	0.34	0.50	0.34	0.62	0.34	0.75
0.071-0.072	0.38	0.56	0.38	0.68	0.38	0.80
0.080-0.081	0.41	0.62	0.41	0.75	0.41	0.80
0.090-0.091	0.44	0.62	0.44	0.88	0.44	0.95
0.100	0.44	0.74	0.44	1.00	0.44	1.10
0.102	0.44	0.75	0.44	1.00	0.44	1.10
0.125	0.50	1.00	0.50	1.25	0.50	1.38

Figure 12-6. Acceptable Spotweld Spacing

Table 12-3. Allowable Percentage of Defective Spotwelds [1, 5]

Nature of defects	Acceptable without repair: Maximum CRES A	Acceptable without repair: Maximum AL A	Acceptable without repair: Maximum AL B	Acceptable without repair: Maximum adjacent CRES A	Acceptable without repair: Maximum adjacent AL A	Acceptable without repair: Maximum adjacent AL B	Acceptable with repair: Maximum CRES A	Acceptable with repair: Maximum AL A	Acceptable with repair: Maximum AL B	Acceptable with repair: Maximum adjacent CRES A	Acceptable with repair: Maximum adjacent AL A	Acceptable with repair: Maximum adjacent AL B
A Cracks open to surface	0	0	0	0	0	0	0	3	6	0	2	5
B Edge bulge cracks	0	0	0	0	0	0	0	0	0	0	0	0
C. Sheet separation exceeding established limits	0	3	5	2	2	5	0	0	0	0	0	0
D Blown spots	0	0	0	0	0	0	0	0	3	0	0	0
E Pits over 0 0625 Diameter	0	0	0	0	0	0	0	0	5	0	0	5
F Pits less than 0 0625 Diameter[3]	3	3	5	2	2	5	0	3	5	0	2	5
G Metal expulsion between sheets (spits)	5	3	5	2	2	5	0	0	5	0	2	5
H Surface flashes and/ or tip pick-up	2	2	3	2	2	3	0	0	3	0	0	5
I Excessive indentation[4]	5	5	10	2	2	10	0	0	0	0	0	0
J Missing spotwelds	0	0	0	0	0	0	0	3	5	0	0	0
K Broken spotwelds (sheet not damaged)	0	0	0	0	0	0	0	3	5	0	5	5
Total percentage	10	10	20	—	—	—	0	5	10	—	—	—

1 The allowable number of defective spotwelds is given in percentage of the total number of welds in a specific joint. When a percentage results in a fraction, use the next higher whole number except where the resulting number of welds is less than 0.5.

2 Class A welded joints are those whose failure could cause direct loss of the helicopter or its control, a major component, or injury to personnel. Class B welded joints are those not included in Class A.

Table 12-3. Allowable Percentage of Defective Spotwelds [1, 5] CONT

[3] When the number of defective spotwelds less than 0.625 diameter exceed 3 percent, but do not exceed 6 percent of the total defective spotwelds, all the defective spotwelds must be repaired.

[4] Excessive indentation is any electrode indentation that exceeds 10 percent, but does not exceed 20 percent, of the thickness of the thinnest sheet. Depths are limited to 0.004 in any area where aerodynamics may be influenced by excessive indentations.

[5] Refer to table 12-4 for repair of defective spotwelds exceeding allowable percentages.

Table 12-4. Repair of Defective Spotwelds Exceeding Allowable Percentage

Thickness of thinnest outer sheet (2 sheet combinations)1	Minimum acceptable Rivet diameter and type Protruding		Flush		Drill
	CRES	Al	CRES	Al	No.
0.016	M3	AD3	M3	AD3	41
0.020	M3	AD3	M3	AD3	41
0.025	M3	AD3	M3	AD3	41
0.032	M4	AD4	M4	AD4	30
0.040	M4	AD4	M4	AD4	30
0.050	M5	AD5	M5	AD5	21
0.063	-	DD6	-	DD6	11
0.071	-	DD6	-	DD6	11
0.080	-	DD6	-	DD6	11

[1] For 3-sheet combinations or more, the thickness shown shall be that of the thickest outer sheet.

f. *Skin Cutout Patching Using Spotwelds*. See figure 12-8 for patching of skin cutouts.

NOTE

- **A maximum of 3 repairs may be made to each assembly or subassembly. The maximum hole diameter will be 1.5 inch.**
- **Damaged areas having a cutout diameter of 0.187 inch or less may be repaired by inserting an MS 20470, MS 20615, MS 20426, or an MS 20427 rivet of the proper alloy.**

g. *Skin Cutout Repair Near Stiffener Using Spotwelds*. See figure 1 29 for repair of skin cutouts near a stiffener.

NOTE

- **A maximum of 3 repairs may be made to each assembly or subassembly. The maximum hole diameter will be 1.5 inch.**
- **Damaged areas having a cutout diameter of 0.187 inch or less may be repaired by inserting an MS 20470, MS 20615, MS 20426, or an MS 20427 rivet of the proper alloy.**

h. *Spotweld Repair to Hole in Stiffener*. Figure 12-10 illustrates a typical spotwelded repair to a hole in a stiffener.

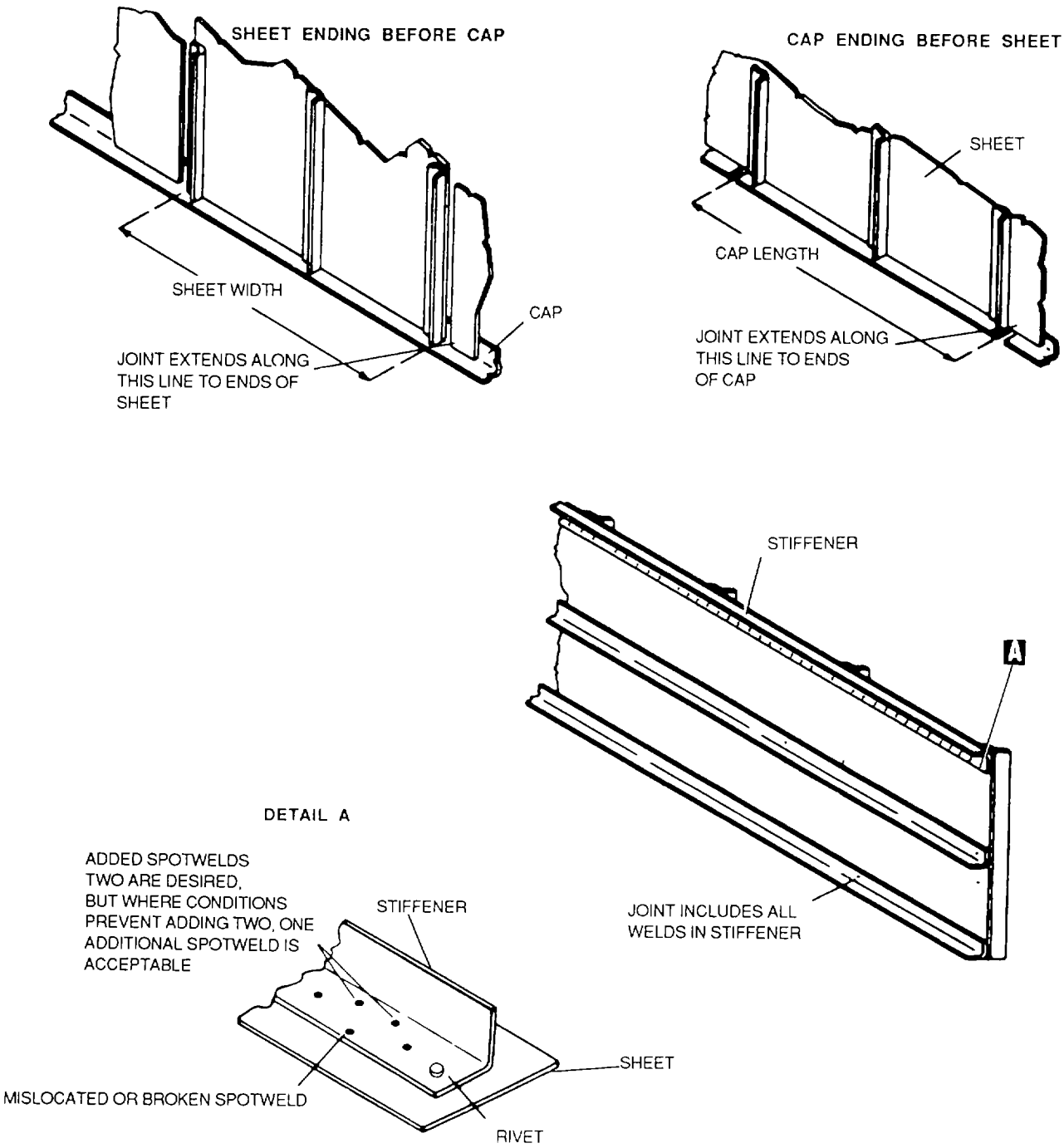

Figure 12-7. Repair for Short Edge Distance and Broken Spotwelds

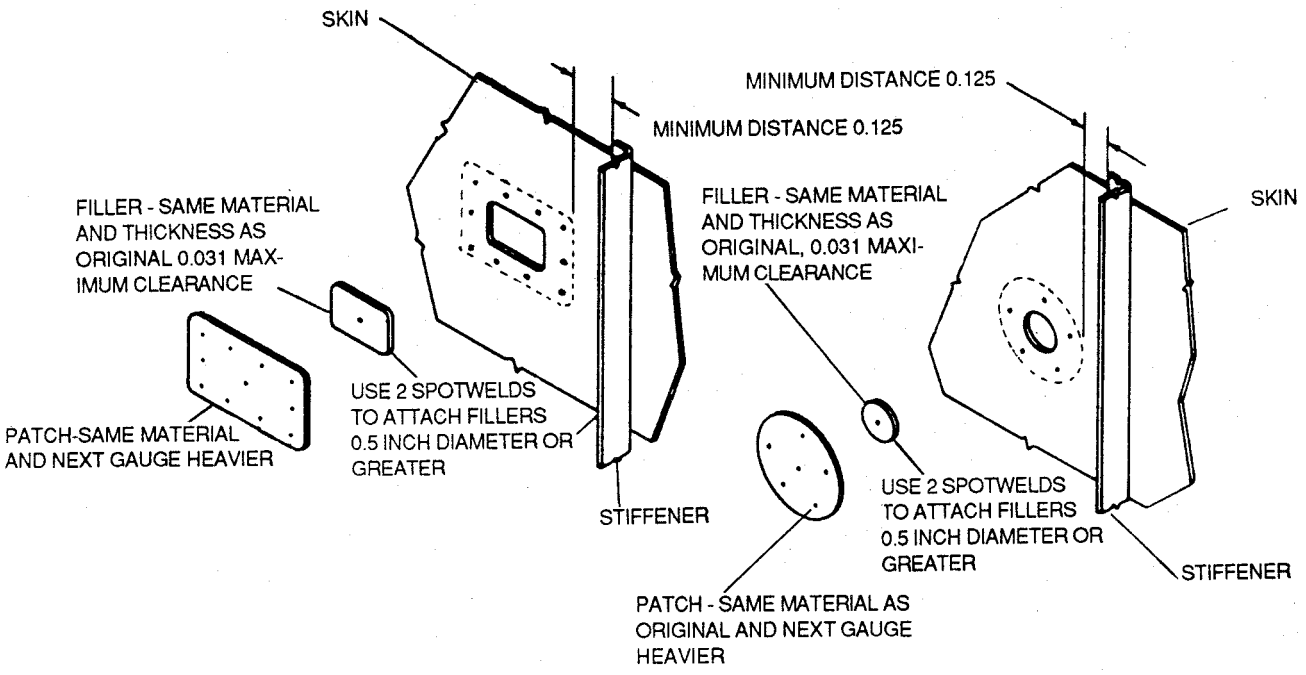

Figure 12-8. Skin Cutout Patching Using Spotwelds

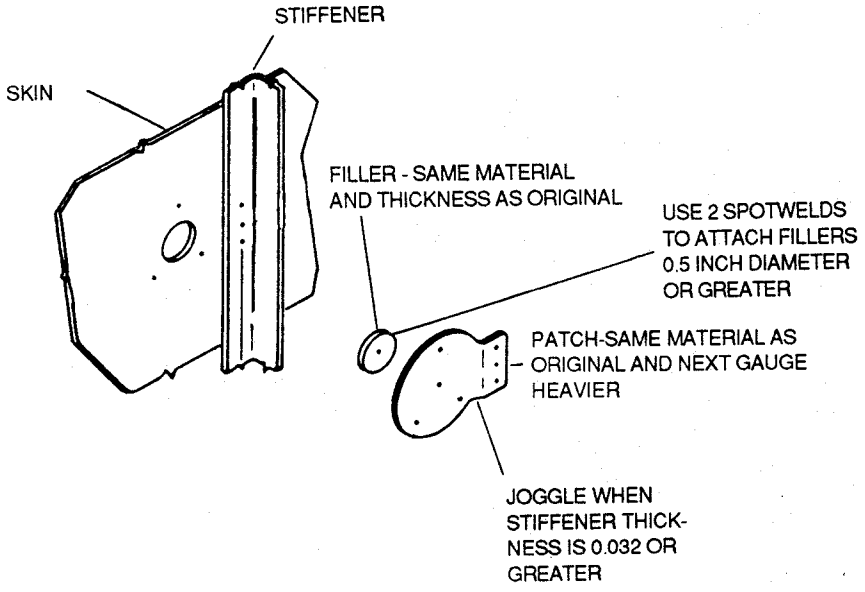

Figure 12-9. Skin Cutout Repair Near Stiffener Using Spotwelds

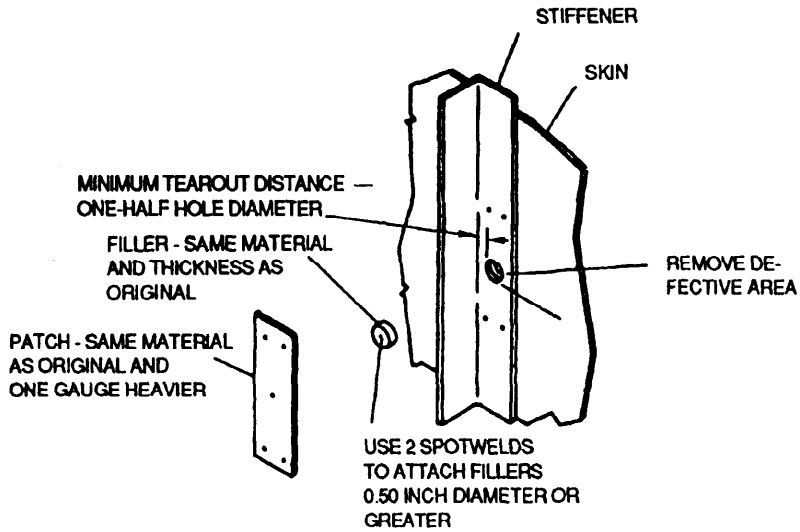

Figure 12-10. Spotweld Repair to Hole in Stiffener

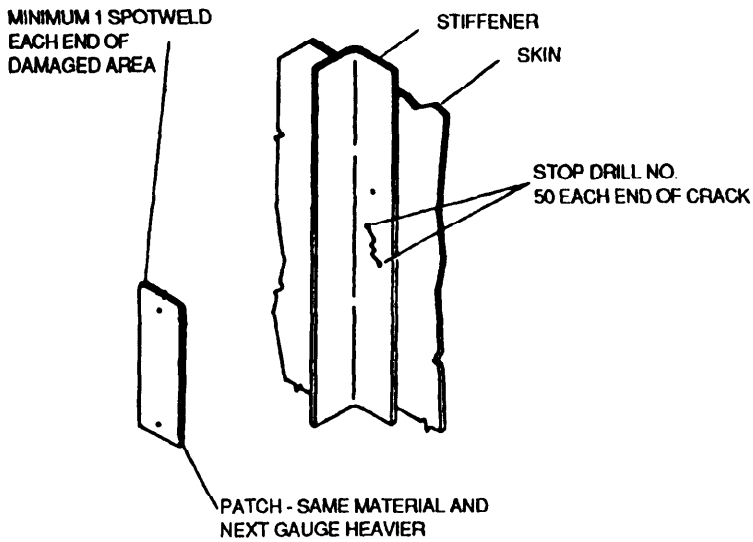

Figure 12-11. Spotweld Repair to Crack in Stiffener

NOTE

A maximum of 3 repairs may be made to each assembly or subassembly. The maximum hole diameter will be 1.5 inch.

Damaged areas having a cutout diameter of 0.187 inch or less may be repaired by inserting an MS 20470, MS 20615, MS 20426, or an MS 20427 rivet of the proper alloy.

i. Spotweld Repair to Crack in Stiffener. Figure 12-11 shows a typical spotwelded repair to a cracked stiffener.

NOTE

A maximum of 3 repairs may be made to each assembly or subassembly. The maximum hole diameter will be 1.5 inch.

Damaged areas having a cutout diameter of 0.187 inch or less may be repaired by inserting an MS 20470, MS 20615, MS 20426, or an MS 20427 rivet of the proper alloy.

APPENDIX A
REFERENCES

AR 385-10	Army Safety Program
AR 385-30	Safety Color Code Markings and Signs
AR 385-32	Protective Clothing and Equipment
AR 385-95	Army Aviation Accident Prevention
ASTM 8127	
ASTMB165	
ASTM8166	
ASTM8168	
FED-STD-183	Continuous Identification MArking of Iron and Steel Products
FED-STD-184	Identification Marking of Aluminum, Magnesium, and Titanium
FM 5-553	General Drafting
FS-RW-1	
L-P-383	Plastic Material, Polyester Resin, Glass Fiber base, Low Pressure Laminated
MIL-C-6799	Coatings, Sprayable, Strippable, Protective, Water Emulsion
MIL-C-8087	Core Material, Foamed-In-Place, Urethane Type
MIL-H-6088	Heat Treatment of Aluminum Alloys
MIL-S-9041	Sandwich Construction; Plastic Resin, Glass Fabric Base, Laminated Facings and Honeycomb Core for Aircraft Structural and electronic Applications
MIL-STD-401	Sandwich Construction and Core Materials, General Test Method
NFPA 410	Fire Codes
OSHA 1910.251	Welding, Cutting and Brazing Definitions
TM 1-1500-204-23-6	Aviation Unit Maintenance (AVUM) and Aviation Intermediate Maintenance (AVIM) Manual for General Aircraft Maintenance (Hardware and Consumable Materials) Volume 6
TM 1-1 500-204-23-7	Aviation Unit Maintenance (AVUM) and Aviation Intermediate Maintenance (AVIM) Manual for General Aircraft Maintenance (Nondestructive Testing and Flaw Detection Procedures and Practices) Volume 7
TM 1-1500-204-23-8	Aviation Unit Maintenance (AVUM) and Aviation Intermediate Maintenance (AVIM) Manual for General Aircraft Maintenance (Machine and Welding Shop Practices) Volume 8
TM 55-1500-335-23	Nondestructive Inspection Methods
TM 55-1500-345-23	Painting and Marking of Army Aircraft
UT-30	Talcum Powder
29 1910	

APPENDIX B
BLIND RIVET CONVERSION TABLES

Table B-1. Protruding Head, 2017 Aluminum Alloy

Nominal diameter	National Aerospace Standard part No	Cherry part No Cherrylock rivets	National Aerospace Standard part No.	Olympic part No Olympic-Lok rivets	Grip range Minimum	Grip range Maximum	Superseded part No.
1/8	NAS1398D4-1	CR2163-4-1	NAS1398D4A1	RV1200.4-1	0.025	0.062	MS20600AD4-1
5/32	NAS1398D5-1	CR2163-5-1	NAS1398D5A1	RV1200-5-1	0.031	0.062	MS20600AD5-1
3/16	NAS1398D6-1	CR2163-6-1	NAS1 398D6A1	RV1200-6-1	0.031	0.062	MS20600AD6-1
1/4	NAS1398D8-2	CR2163-8-2	NAS1398D8A2	RV2100-8-2	0.063	0.125	MS20600AD8-2

Table B-2. Protruding Head, 5056 Aluminum Alloy

Nominal diameter	Cherry part No nominal CherryMAX rivet	National Aerospace Standard part No	Cherry part No Cherrylock rivets	National Aerospace Standard part No.	Olympic part No Olympic-Lok rivets	Grip range Minimum	Grip range Maximum	Superseded part No.
1/8	CR3213-4-1	NAS1398B4-1	CR2263-4-1	NAS1398B4A1	RV12504-1	0.025	0.062	MS20600B4-1
5/32	CR3213-5-1	NAS1398B5-1	CR2263-5-1	NAS1398B5A1	RV1250-5-1	0.031	0.062	MS20600B5-1
3/16	CR3213-6-1	NAS1398B6-1	CR2263-6-1	NAS1398B6A1	RV1250-6-1	0.037	0.062	MS20600B6-1
1/4		NAS1398B8-2	CR2263-8-2	NAS1398B8A2	RV1250-8-2	0.063	0.125	MS20600B8-2

APPENDIX B - CONT

Table B-3. Protruding Head, Monel, Cadmium-Plated

Nominal diameter	Cherry part No nominal CherryMAX rivet	National Aerospace Standard part No	Cherry part No Cherrylock rivets	National Aerospace Standard part No.	Olympic part No Olympic-Lok rivets	Grip range Minimum	Grip range Maximum
1/8	CR3523P4-1	NAS1398MW4-1	CR2563-4-1	NAS1398MW4A1	RV1290-4-1	0.025	0.062
5/32	CR3523P5-1	NAS1398MW5-1	CR2563-5-1	NAS1398MW5A1	RV1290-5-1	0.031	0.062
3/16	CR3523P6-1	NAS1398MW6-1	CR2563-6-1	NAS1 398MW6A1	RV1290-6-1	0.037	0.062
1/4		NAS1398MW8-2	CR2563-8-2	NAS1398MW8A2	RV1290-8-2	0.063	0.125

Table B-4. Protruding Head, A-286 Corrosion-Resistant Steel

Nominal diameter	National Aerospace Standard part No	Cherry part No Cherrylock rivets	National Aerospace Standard part No.	Olympic part No Olympic-Lok rivets	Grip range Minimum	Grip range Maximum
1/8	NAS1398C4-1	CR2663-4-1	NAS1398C4A1	RV1240-4-1	0.025	0.062
5/32	NAS1398C5-1	CR2663-5-1	NAS1398C5A1	RV1240-5-1	0.031	0.062
3/16	NAS1398C6-1	CR2663-6-1	NAS1398C6A1	RV1240-6-1	0.037	0.062
1/4	NAS1398C8-2	CR2663-8-2	NAS1398C8A2	RV1240-8-2	0.063	0.125

Table B-5. Protruding Head, Monel, Unplated

Nominal diameter	Cherry part No. nominal CherryMAX rivet	National Aerospace Standard part No.	Cherry part No. Cherrylock rivets	National Aerospace Standard part No.	Olympic part No. Olympic-Lok rivets	Grip range		Superseded part No.
						Minimum	Maximum	
1/8	CR3523-4-1	NAS1398M4-1	CR2563M4-1	NAS1398M4A1	RV1290M4-1	0.025	0.062	MS20600M4-1
5/32	CR3523-5-1	NAS1398M5-1	CR2563M5-1	NAS1395M5A1	RV1290M5-1	0.031	0.062	MS20600M5-1
3/16	CR3523-6-1	NAS1398M6-1	CR2563M6-1	NAS1398M6A1	RV1290M6-1	0.037	0.062	MS20600M6-1
1/4		NAS1398M8-2	CR2563M8-2	NAS1398MBA2	RV1290M8-2	0.063	0.125	MS20600MB-2

Table B-6. Countersunk Head, 2017 Aluminum Alloy

Nominal diameter	National Aerospace Standard part No.	Cherry part No. Cherrylock rivets	National Aerospace Standard part No.	Olympic part No. Olympic-Lok rivets	Grip range		Superseded part No.
					Minimum	Maximum	
1/8	NAS139904-2	CR2162-4-2	NAS139904A2	RV1201-4-2	0.063	0.125	MS20601AD4-2
5/32	NAS139905-2	CR2162-5-2	NAS1399D5A2	RV1201-5-2	0.065	0.125	MS20601AD5-2
3/16	NAS1399D6-2	CR2162-6-2	NAS1399D6A2	RV1201-6-2	0.080	0.125	MS20601AD6-2
1/4	NAS1399D8-3	CR2162-8-3	NAS1399D8A3	RV1201-8-3	0.126	0.187	MS20601ADB-3

APPENDIX B - CONT

Table B-7. Countersunk Head, 5056 Aluminum Alloy

Nominal diameter	Cherry part No. nominal CherryMax rivet	National Aerospace Standard part No.	Cherry part No. Cherrylock rivets	National Aerospace Standard part No.	Olympic part No. Olympic-Lok rivets	Grip range		Superseded part No.
						Minimum	Maximum	
1/8	CR3212-4-2	NAS1399B4-2	CR22624-2	NAS139984A2	RV1251-4-2	0.063	0.125	MS20601B4-2
5/3	CR3212-5-2	NAS139985-2	CR2262-5-2	NAS1399B5A2	RV1251-5-2	0.065	0.125	MS20601B5-2
3/16	CR3212-6-2	NAS139986-2	CR2262-6-2	NAS1399B6A2	RV1251-6-2	0.080	0.125	MS2060186-2
1/4		NAS139988-3	CR2262-8-3	NAS1399B8A3	RV1251-8-3	0.126	0.187	MS20601B8-3

Table B-8. Countersunk Head, A-286 Corrosion-Resistant Steel

Nominal diameter	National Aerospace Standard part No.	Cherry part No. Cherrylock rivets	National Aerospace Standard part No.	Olympic part No. Olympic-Lok rivets	Grip range	
					Minimum	Maximum
1/8	NAS1399C4-2	CR2662-4-2	NAS1399C4A2	RV1241-4-2	0.083	0.125
5/32	NAS1399C5-2	CR2662-5-2	NAS1399C5A2	RV1241-5-2	0.065	0.125
3/16	NAS1399C6-2	CR2662-6-2	NAS1399C6A2	RV1241-6-2	0.090	0.125
1/4	NAS1399683	CR2662-83	NAS1399C8A3	RV1241-8-3	0.126	0.187

Table B-9. Countersunk Head, Monel, Cadmium-Plated

Nominal diameter	Cherry part No nominal CherryMAX rivet	National Aerospace Standard part No	Cherry part No Cherrylock rivets	National Aerospace Standard part No.	Olympic part No Olympic-Lok rivets	Grip range Minimum	Grip range Maximum
1/8	CR3522P4-2	NAS1399MW4-2	CR2562-4-2	NAS1399MW4A2	RV12914-2	0.063	0.125
5/32	CR3522P5-2	NAS1399MW5-2	CR2562-5-2	NAS1399MW5A2	RV1291-5-2	0.065	0.125
3/16	CR3522P6-2	NAS1399MW6-2	CR2562-6-2	NAS1399MW6A2	RV1291-6-2	0.080	0.125
1/4		NAS1399MW8-3	CR2562-8-3	NAS1399MW8A3	RV1291-8-3	0.126	0.187

Table B-10. Countersunk Head, Monel, Unplated

Nominal diameter	Cherry part No nominal CherryMAX rivet	National Aerospace Standard part No	Cherry part No bulbed Cherrylock rivets	National Aerospace Standard part No.	Olympic part No Olympic Bulb-Lok rivet	Grip range Minimum	Grip range Maximum	Superseded part No.
1/8	CR3522-4-2	NAS1399M4-2	CR2562M-4-2	NAS1399M4A2	RV1291M4-2	0.063	0.125	MS20601M4-2
5/32	CR3522-5-2	NAS1 399M5-2	CR2562M-5-2	NAS1 399M5A2	RV1291 M5-2	0.065	0.125	MS20601 M5-2
3/16	CR3522-6-2	NAS1 399M6-2	CR2562M-6-2	NAS1399M6A2	RV1 291 M6-2	0.080	0.125	MS20601 M6-2
1/4		NAS1399M8-3	CR2562M-8-3	NAS1399M8A3	RV1291 M8-3	0.124	0.187	MS20601 M8-3

Table B-11. Universal Head, 5056 Aluminum Alloy, Bulbed

Nominal diameter	Cherry part No bulbed CherryMAX rivet	National Aerospace Standard part No	Cherry part No bulbed Cherrylock rivets	National Aerospace Standard part No.	Olympic part No Olympic Bulb-Lok rivet	Grip range Minimum	Grip range Maximum	McDonnell Douglas Std. Part No.
1/8	CR3243-4-1	NAS1738B4-1	CR2249-4-1	NAS1768D4-1	RV1100-4-1	0.020	0.062	3M266B4-1
5/32	CR3243-5-1	NAS1738B5-1	CR2249-5-1	NAS1768D5-1	RV1100-5-1	0.025	0.062	3M266B5-1
3/16	CR3243-6-1	NAS1738B6-1	CR2249-6-1	NAS1 768D6-1	RV1100-6-1	0.030	0.062	3M266B6-1

Table B-12. Universal Head, Monel, Cadmium-Plated, Bulbed

Nominal diameter	Cherry part No bulbed CherryMAX rivet	National Aerospace Standard part No	Cherry part No bulbed Cherrylock rivets	National Aerospace Standard part No.	Olympic part No Olympic Bulb-Lok rivet	Grip range Minimum	Grip range Maximum	McDonnell Douglas Std. Part No.
1/8	CR3553P4-1	NAS1738MW4-1	CR2539P4-1	NAS1768MW4-1	RV11904-1	0.020	0.062	3M266M4P1
5/32	CR3553P5-1	NAS1738MW5-1	CR2539P5-1	NAS1768MW5-1	RV1190-5-1	0.025	0.062	3M266M5P1
3/16	CR3553P6-1	NAS1738MW6-1	CR2539P6-1	NAS1768MW6-1	RV11 90-6-1	0.030	0.062	3M266M6P1

Table B-13. Universal Head, Monel, Unplated, Bulbed

Nominal diameter	Cherry part No. bulbed CherryMAX rivet	National Aerospace Standard part No.	Cherry part No. bulbed Cherrylock rivet	National Aerospace Standard part No.	Olympic part No. Olympic Bulb-Lok rivet	Grip range Minimum	Grip range Maximum	McDonnell Douglas Std. part No.
1/8	CR3553-4-1	NAS1738M4-1	CR2539-4-1	NAS1768M4-1	RV1190M4-1	0.020	0.062	3M266M4-1
5/32	CR3553-5-1	NAS1738M5-1	CR2539-5-1	NAS1768M5-1	RV1190M5-1	0.025	0.062	3M266M5-1
3/16	CR3553-6-1	NAS1738M61	CR2539-6-1	NAS1768M6-1	RV1190M6-1	0.030	0.062	3M266M6-1

Table B-14. Countersunk Head, 5056 Aluminum Alloy, Bulbed

Nominal diameter	Cherry part No. bulbed CherryMAX rivet	National Aerospace Standard part No.	Cherry part No. bulbed Cherrylock rivet	National Aerospace Standard part No.	Olympic part No. Olympic Bulb-Lok rivet	Grip range Minimum	Grip range Maximum	McDonnell Douglas Std. part No.
1/8	(*)	NAS173984-1	CR2248-4-1	NAS1769D4-1	RV1101-4-1	0.020	0.062	3M26784-1
5/32	(*)	NAS1739B5-1	CR2248-5-1	NAS176905-1	RV1101-5-1	0.025	0.062	3M26785-1
	CR3242-5-2	NAS173985-2	CR2248-5-2	NAS1769D5-2	RV11 01-5-2	0.063	0.125	3M26685-2
3/16	(*)	NAS173986-1	CR2248-6-1	NAS1769D6-1	RV11 01-6-1	0.030	0.062	3M26786-1
	CR3242-6-2	NAS173986-2	CR2248-6-2	NAS1769D6-2	RV11 01-6-2	0.063	0.125	3M26786-2

APPENDIX B - CONT

Table B-15. Countersunk Head, Monel Unplated, Bulbed

Nominal diameter	Cherry part No. bulbed CherryMAX-rivet	National Aerospace Standard part No.	Cherry part No. bulbed Cherrylock rivet	National Aerospace Standard part No.	Olympic part No. Olympic Bulb-Lok rivet	Grip range Minimum	Grip range Maximum	McDonnell Douglas Std. part No.
1/8	(*)	NAS1739M4-1	CR2538-4-1	NAS1769M4-1	RV1191M4-1	0.045	0.062	3M267M4-1
	CR3552-4-2	NAS1739M4-2	CR253842	NAS1769M4-2	RV1191M4-2	0.063	0.125	3M267M4-2
5/32	CR3552-5-2	NAS1739M5-2	CR2538-5-2	NAS1769M5-2	RV1191M5-2	0.063	0.125	3M267M5-2
3/16	CR3552-6-2	NAS1739M6-2	CR2538-6-2	NAS1769M6-2	RV1191M6-2	0.073	0.125	3M267M6-2

Table B-16. Countersunk, Monel, Cadmium-Plated, Bulbed

Nominal diameter	Cherry part No. bulbed CherryMAX rivet	National Aerospace Standard part No.	Cherry part No. bulbed Cherrylock rivet	National Aerospace Standard part No.	Olympic part No. Olympic Bulb-Lok rivet	Grip range Minimum	Grip range Maximum	McDonnell Douglas Std. part No.
1/8	(*)	NAS1739MW4-1	CR2538P4-1	NAS1769MW4-1	RV1191-4-1	0.046	0.062	3M267M4P1
	CR3552P4-2	NAS1739MW4-2	CR2538P4-2	NAS1769MW4-2	RV1191-4-2	0.063	0.125	3M267M4P2
5/32	CR3552P5-2	NAS1739MW5-2	CR2539P5-2	NAS1769MW5-2	RV1191-5-2	0.063	0.125	3M267M5P2
3/16	CR3552P6-2	NAS1739MW6-2	CR2539P6-2	NAS1769MW6-2	RV1191-6-2	0.073	0.125	3M267M6P2

GLOSSARY

ARBOR -	A spindle on a cutting or grinding machine that holds the material to be worked.
BRITTLENESS -	The condition of being easily broken or snapped.
BUCKLING -	Warping or kinking caused by outside pressure.
BURNISHING -	Rubbing a material with a tool for the purpose of moving a very slight amount of material for smoothing or compacting.
BUTYRAL -	Polyvinyl material used within layers of laminated transparent plastics.
CATALYST -	Substance added to resin adhesive to produce onset of hardening.
CHAMFER -	Process of forming a beveled edge.
CHORD -	The straight line connecting the leading and trailing edges of an airfoil.
CONVECTION -	The circulatory transmission of heat carried by air or water current.
CRAZING -	Network of fine cracks on or under the surface of transparent plastics.
DIE -	A device for imparting a desired shape to a material either by drawing or impression.
EXTRUSION -	Metal or plastic object which is formed by drawing through a die.
FAYING SURFACE -	Surface of metal which is overlapped by another piece of metal.
FILLET -	A concave junction formed where two surfaces meet.
FLANGE -	A rib of rim used for strength, guiding, or attachment to another object.
FULCRUM -	The support about which a lever turns.
LAMINATE -	A structure made of superimposed layers of one or more materials.
MANDREL -	Structure that serves as a core around which metal is molded or formed.
MODULUS -	A constant that numerically expresses the degree in which a property (such as elasticity) is possessed by a material.
MONOLITHIC -	Material cast as a single piece.
MONOMER -	A chemical compound that can undergo polymerization.
OUTING FLANNEL -	A flannel material having some wool.

GLOSSARY - CONT

OXIDATION -	The process of chemically removing ions from an atom, ion, or molecule.
PEENING -	Draw, bend, or flatten by hammering.
PERIPHERY -	The outward bounds of an area.
PHENOLIC -	Cotton fabric filled with a phenolic resin to form a hard material suitble for fairleads, supports, etc.
PLANISHING -	The process of toughening and finishing metal by hammering lightly.
PLATEN -	A flat plate.
POLYMER -	A chemical compound created by polymerization and consisting of repeating structural units.
POLYMERIZATION -	A chemical reaction in which larger molecules are formed that contain repeating structural units of the original molecules.
PRECIPITATION -	The action of separating from solution or suspension.
PROMOTER -	A substance that increases the activity of a catalyst.
RESIN -	Fusible substance used as the basic ingredient of an adhesive.
SCRIM CLOTH -	A durable, plain woven cloth, usually cotton.
SWAGING -	Process of forming metal by squeezing metal tightly into shape.
TALLOW -	White, solid fat used in lubricants.
TREADLE -	Foot-actuated device used for operating a machine.
TRUSS -	An assembly of beams forming a rigid framework.
VISCOUS -	Having resistance to flow.
WEB -	The plate connecting the upper and lower flanges of a metal structure, as in an I-beam.
WING LOADING -	The measure of pounds per square foot to wing area. Figured by the formula: Gross Weight X Wing Area in square feet.

INDEX

Subject — **Paragraph Figure, Table Number**

A

Abrasion Resistance 5-21
Acceptability Limits, Rivet F7-22
Acceptable Spotweld Spacing 12-6a
Access Door, Flush F8-8
Acrylic Plastic, Minimum Annealing Time T10-4
Acrylic Plastics, Drill for F10-3
Acrylic Plastics, Oven Temperatures for T10-1
Addition of Weights 11-4c
Adhesives and Resins 9-4
Application 9-4e
Combination or Two-Step Adhesives 9-4b
High-Temperature Setting Adhesives 9-4a
Room Temperature Setting Adhesives 9-4c
Storage 9-4d
After Deburnng F7-50
Aging Time and Temperature (Aluminum Alloys) 5-7f
Aircraft Mating Jig F8-1
Aircraft Metals, Shaping 6-2
Aircraft Plastics, General 10-1
Aircraft Structures, General 4-1
Airframe Sheet Metal Repair, General 8-1
Airframe Sheet Metal, Basic Principles of Repair 8-2
Airplane Structural Parts F4-5
Airplanes (Fuselage) 4-2b
Alclad Alloys, Reheat Treatment of T5-12
Alclad Construction F5-8
Allowable Percentage of Defective Spotwelds 12-6b
Allowance, Bend, 90-Degree Bend F6-3
Allowance, Bend, Table T6-1
Alloy Characteristics and Uses (Aluminum) 5-7b
Alloying 5-4a
Alloying Elements (for Steel) 5-6b
Alloying Elements, Major T5-5
Alloys, Aluminum 5-7
Alloys, Copper 5-10
Alloys, Magnesium 5-8
Alloys, Metals and 5-4
Alloys, Titanium 5-9
Alternate Transparent Plastic Plug Repair 10-13b
Aluminum Alloy Designations and Conversions to 4 Digit System T5-6
Aluminum Alloy Facing Material 9-3a
Aluminum Alloy Rivets, Single Shear, Strength of T7-2
Aluminum Alloy Sheet Substitution 5-7i
Aluminum Alloy, Hardness Conversion for F5-16
Aluminum and Aluminum Alloys 5-7
Aging Time and Temperature 5-7f
Alloy Characteristics and Uses 5-7b

INDEX-CONT

Subject — **Paragraph Figure, Table Number**

A - Continued

Aluminum Alloy Sheet Substitution 5-7i
Corrosion Resistance 5-7c
Heat-Treatment Methods 5-7e
Heat-Treating Procedures 5-7g
Identification 5-7a
Insulation of Dissimilar Metals 5-7h
Material Substitution 5-7j
Shop Working Practice 5-7d
Aluminum, Bare, Sheet, Plate, Extrusions, and Forgings, Rockwell Hardness Values for T5-21
Aluminum Identification Marking Example F5-7
Aluminum Lockbolt Rivet Gun, Pull- and Blind-Type F7-73
Aluminum Sheet and Plate, 0.050 Inch Minimum, Rockwell Hardness Values for T5-20
Aluminum, Model B, Hardness Range F5-13
Aluminum-Alloy Sheet Substitution T5-14
Annealing 10-10c
Application (of Adhesives and Resins) 9-4e
Approved Edge Attachment for Laminated Enclosure F10-19
Approved Edge Attachment for Monolithic Enclosure F10-18
Ashing 10-14b
Assembling (Joined Plastics) 10-9h
Assembly Tools, Cherry F7-45
Assembly, Empennage F4-14
Automatic Center Punch F3-18
Aviation Snips 3-4f, F3-12

B

Balance Considerations, Surface 11-2
Balanced and Unbalanced Conditions Fll-4
Balancing Jig, Field-Expedient F11-6
Balancing Principles 11-3
Effects of Moments 11-3a
Effects of Weight and Distance 11-3b
Band Saw 3-5d
Band Saw, Contour F3-27
Bandsaw Widths for Various Radii of Cuts (of Plastic) T10-3
Bar Folding Machine 3-6a, F3-31
Bars, Bucking F7-6
Basic Part Numbers, Jo-Bolt F7-81
Basic Principles of Repair (of Airframe Sheet Metal) 8-2
Maintaining Original Contour 8-2b
Maintaining Original Strength 8-2a
Minimizing Weight 8-2c
Beaded Skin, Patch Repairs to F8-57
Beads, Crimps, Relief Holes, and Riveted Angles, Nose Rib Using F6-22
Bearing Strength (Pounds) T7-3
Bench Grinder F3-30

INDEX-CONT

Subject | **Paragraph Figure, Table Number**

B - Continued

Bench Shears 3-4e, F3-11
Bend Allowance 6-3b
Bend Allowance Table T6-1
Bend Allowance, 90-Degree Bend F6-3
Bending 5-3e, F5-5
Bending Sheet 6-3
    Bend Allowance 6-3b
    Brake or Sight Line 6-3d
    Duplicating Patterns 6-3g
    Flat Pattern Layout 6-3e
    Locating Brake or Sight Line 6-3f
    Radius of Bend 6-3a
    Setback 6-3c
Blanket and Seals 9-9e
Blind-Type Lockbolt Numbering System T7-24
Blind-Type Lockbolt, Installation F7-77
Blind-Type Lockbolts, Drilling Procedures for T7-30
Blind-Type Lockbolts, Grip Range for T7-27
Block, Bumping F6-26
Blocks, Forming F3-23
Bolt and Rivet Mounting (on Transparent Plastics) 10-16c
Bolt Installation, Typical (in Transparent Plastic) F10-17
Bonded Former Assemblies 9-6p
Bonded Former Repair (Cap) F9-13
Bonded Former Repair (Web) F9-14
Bonded Magnesium Panel Repair F9-3
Bonded Magnesium Panels 9-6d
Bonded Stiffeners 9-6c
Bonding Procedures 10-11
    Bonding Procedures for Acrylic Plastic MIL-P-5425 ..... 10-11a
    Bonding Procedures for Acrylic Plastic MIL-P-8184 ..... 10-11b
Bonding Procedures for Acrylic Plastic MIL-P-5425 ..... 10-1la
Bonding Procedures for Acrylic Plastic MIL-P-8184 ..... 10-11b
Bowed Steel Tubes, Straightening F8-64
Box Beam Wing Construction F4-10
Brake Line, Locating, in the Brake F6-11
Brake or Sight Line 6-3d, F6-5
Brake or Sight Line of Flange, Locating F6-10
Brake, Cornice F3-32
Brass and Mild Steel, Hardness Conversion for F5-15
Bucking Bar Weights, Recommended T7-6
Bucking Bars F7-6
Buckles, Working Out F6-17
Bulkhead and Skin Repair F8-28
Bulkhead Flanged Member Repairs F8-26
Bulkhead Installation F4-18
Bulkhead Repair 8-9i

INDEX-CONT

Subject | **Paragraph Figure, Table Number**

B - Continued

Bulkheads, Frames, and Formers 4-8a
Bumping 6-4a
Bumping Block F6-26
Bumping, Sandbag F6-29
Burning (of Plastics) 10-4b
Burrs After Drilling F7-49

C

Cabin and Tall Cone Sections F4-4
Calculation Method (of Balancing) F11-8
Camlock Fastener F7-107
Camlock Fasteners 7-15b
Camlock Fasteners 7-15b
Camlock Punch, Use of F7-109
Camlock Stud Installation F7-112
Capacity, Tool, Chart (for Rivets T7-14
Catcher Bag, Stem 670A20 ..... F7-44
Cemented Assemblies, Jigs for Holding 10-9
Cemented Joint, Effect of Heat Treating on a F10-10
Cemented Plastic Joint F10-4
Cementing Procedures 10-9
- Assembling 10-9h
- Direct Application Method 10-9d
- Fitting 10-9e
- Glue Method 10-9c
- Jigs 10-9i
- Masking 10-9f
- Soak Method 10-9b
- Soaking 10-9g
- Type of Cement 10-9a

Center Punch F3-17
Center Punch for Drilling F7-15
Center Punch, Automatic F3-18
Centering Inner Sleeve in Steel Tube F8-68
Chamfered Flanging Block F6-32
Channel Repair by Insertion F8-30
Channel Repair by Patching F8-29
Channel, Sample F6-6
Characteristics (of Aircraft Plastics) 10-2
Characteristics (of Titanium Alloys) 5-9b
Chart, Setback T6-2
Chem-Milled Skin Repair 8-6k, F8-2
Chem-Milling T6-2b
Chemical Composition (Copper Alloys) by Trade Name T5-16
Chemical Reaction (of Plastics) 10-4e
Cherry Assembly Tools F7-45
Cherry Grip Gauge 269C3, Use of F7-36

INDEX-CONT

Subject | **Paragraph Figure, Table Number**

C - Continued

CherryMAX Blind Heads, Typical F7-53
CherryMAX Cross Reference (Part Number/Military Standard Part Number) T7-9
CherryMAX Drilling Dimensions T7-15
CherryMAX Inspection 7-8e
CherryMAX Installation 7-8d
CherryMAX Part Number Breakdown T7-10
CherryMAX Removal 7-8g
CherryMAX Removal F7-55
CherryMAX Rivet F7-31
CherryMAX Rivets 7-8
    CherryMAX Inspection 7-8e
    CherryMAX Installation 7-8d
    CherryMAX Removal 7-8g
    CherryMAX Tooling 7-8c
    CherryMAX Troubleshooting 7-8f
    Identification 7-8a
    Selection 7-8b
CherryMAX Rivet Shaving F7-51
CherryMAX Sleeve Stretch Marks F7-54
CherryMAX Stem and Collar Flushness F7-52
CherryMAX Tooling 7-8c
CherryMAX Troubleshooting 7-8f, T7-17
CherryMAX, Countersinking Dimensions for F7-46
Circle Snips 3-4h, F3-14
Circular Damage Repair for Lightly Stressed Areas F8-46
Circular Damage Repair in Heavily Stressed Area F8-51
Circular External Repair 8-8b, F8-11
Clamp Pliers F3-9
Classification of Damage (to Sandwich Construction) 9-5
    Coin-Tapping Technique 9-5a
    Dents 9-5e
    Double Skin Damage 9-5h
    Large Single Skin Damage 9-5g
    Missing Core 9-5b
    Scotchply Edge Member and Corfil Edge Filler Damage 9-51
    Skin Core Voids 9-5c
    Skin Doubler Voids 9-5d
    Small Single Skin Damage 9-5f
    Unbonding and Ply Separation 9-5j
Class I Damage (of Fiber Laminate) F9-19
Class I Repair (of Radomes) 9-9i
Class II Damage (of Fiber Laminate) F9-20
Class II or Class Ill Repair to Plastic with Fluted Core 9-9m
Class II or Class Ill Repair to Plastic with Foamed-In Core 9-9l
Class II Repair (of Radomes) 9-9j
Class II Repair (of Radomes), Typical Scarf Method for F9-26
Class Ill Damage (of Fiber Laminate) F9-21

INDEX-CONT

Subject | **Paragraph Figure, Table Number**

C - Continued

Class III Repair (of Radomes) 9-9k
Classes of Repair (of Fiber Laminate) 9-9c
Classification of Damage (Impregnated Glass Cloth Parts) 9-8a
Classification, of Damage (Airframe Sheet Metal Repair) 8-5
Cleaning (of Glass Windshields) 10-17b
Cleaning (Plastic Enclosures) 10-15a
Cleanliness of Repair Area 9-6a
Cleco Fastener F3-7
Cleco Fasteners Pliers F3-8
Codes, Color (for Aluminum) T5-7
Coin Dimpling F7-10
Coin-Tapping Technique 9-5a
Cold Climate Precautions 10-15e
Cold Forming (of Plastics) 10-7a
Cold-Working 5-5c
Collar Numbering System, Lockbolt T7-25
Color Codes (for Aluminum) T5-7
Combination or Two-Step Adhesives 9-4b
Commonly Used Alloys (Magnesium) 5-8b
Completed Double Face Patch Repair F9-27
Compression F5-2
Compressive Strength 5-2c
Concave Flange, Forming a F6-24
Conductivity 5-2m
Construction (Sandwich) 9-1a
Construction Materials (Fuselage) 4-2c
Construction, Alclad F5-8
Construction, Monocoque F4-1
Construction, Rib F4-13
Construction, Semi-Monocoque F4-2
Construction, Spar F4-12
Consumable Materials 1-3
Contour Band Saw F3-27
Contraction and Expansion Allowances (for Transparent Plastics) T10-5
Control Surface, Establishing Neutral Position of Fll-7
Control Surfaces, Flight 4-7, F4-16
Control Surface Static Balance F11-1
Conversions to 4 Digit System, Aluminum Alloy Designations and T5-6
Convex Flange, Forming a F6-25
Copper and Copper Alloys 5-10
    Identification 5-10a
    Major Alloying Elements 5-10b
Copper, Model BB-75, Hardness Range F5-14
Core Materials 9-2
    Foamed-In-Place Core Materials 9-2c
    Foamed or Cellular Core Materials 9-2b
    Honeycomb Core Materials 9-2d

INDEX-CONT

Subject | **Paragraph Figure, Table Number**

C - Continued

Natural Core Materials 9-2a
Cornice Brake 3-6b, F3-32
Correcting Oval Shaped Steel Tubing Distortion F8-63
Correctly and Incorrectly Driven Rivets 7-5a, F7-20
Corrosion 8-3a
Corrosion Resistance (of Aluminum Alloys) 5-7c
Corrosion Resistance 5-2k
Corrosion Treatment 8-6h
Countersink, Standard F7-7
Countersink, Stop F7-8
Countersinking Dimensions (100 Degrees) for CherryMAX F7-46
Countersinking F7-17
Countersinking Practices F7-18
Countersinking, Incorrect F7-47
Countersinks 3-4i F3-15
Countersinks for Shaving, Recommended T7-16
Countersunk Head Nominal Diameter CherryMAX Rivet F7-32
Countersunk Head Oversize Diameter, CherryMAX Rivet F7-34
Countersunk Head Rivet, Removal of F7-24
Countersunk-Head Rivet Removal 7-6b
Crack or Scratch Repair F9-5
Crack Repair for Lightly Stressed Areas F8-47
Cracking, Rivet Head F7-21
Cracks (in Plastics) 10-12d
Crazing 10-12c
Crimping 6-4b, F6-12
Crimps and Beads, Nose Rib with F6-21
Cross Reference of Old and New Color Code (for Aluminum) T5-8
Cross Reference, Old Color Code (Steel) T5-3
Cross Reference, CherryMAX (Part Number/Military Standard Part Number) T7-9
Curing and Heat Treatment (of Plastics) 10-10
Annealing 10-1 0c
Further Treatment 10-10b
Temperature 10-10a
Curved Formed or Extruded Angles 6-5b
Cushion Thickness F10-8
Cushion, Formation of, on Acrylic Plastic by Immersion In Cement F10-5
Cutout Repair, Rectangular Damage (Lightly Stressed) F8-44
Cutting Acrylic Plastic Sheets, Types of Circular Saw Blades for T10-2
Cutting Techniques (for Plastics) 10-8
Drilling 10-8f
General Precautions 10-8a
Layout 10-8b
Routers 10-8d
Saws 10-8c
Scribing and Sanding 10-8e

INDEX-CONT

Subject	Paragraph Figure, Table Number

D

Damage (to Sandwich Construction), Classification of 9-5
Damage Classification 8-5
Damage Repairable by Insertion 8-5c
Damage Repairable by Patching 8-5b
Damage Requiring Replacement of Parts 8-5d
Negligible Damage 8-5a
Damage Evaluation 8-6b
Damage Inspection 8-4
Damage Near Existing Structure (Lightly Stressed), Repair of F8-45
Damage Removal 8-6c
Damage Repair (Impregnated Glass Cloth Parts) 9-8b
Damage Repair Near Adjacent Member in Heavily Stressed Area - F8-52
Damage Repair Near Existing Structure in Heavily Stressed Areas F8-49
Damage Repair Near Primary Horizontal Member in Heavily Stressed Area F8-50
Damage Repairable by Insertion 8-5c
Damage Repairable by Patching 8-5b
Damage Requiring Replacement of Parts 8-5d
Damage, Class I (of Fiber Laminate) F9-19
Damage, Class II (of Fiber Laminate) F9-20
Damage, Class III (of Fiber Laminate) F9-21
Damaged Face Plies, Removal of, by Scarf Method F9-25
Damaged Honeycomb Skin F9-1
Damaged Swage in Aileron and Flap Skin, Patch Repair to F8-58
Deburring, After F7-50
Deep Scratches, Sanding F10-11
Delamination and Discoloration 10-12e
Dent at a Steel Tube Cluster Joint, Reinforcing a F8-65
Dent or Crack, Sharp, in Length of Steel Tubing, Repair of F8-66
Dents (in Sandwich Construction) 9-5e
Dents and Creases, Repair of F8-32
Design (Sandwich Construction) 9-lb
Determining Rivnut Grip Length F7-57
Die, Joggling F6-30
Dimensions, Drill Bit F7-16
Dimpling and Reaming F7-48
Dimpling F7-9
Dimpling, Coin F7-10
Direct Application Method (Cementing) 10-9d
Double Face Patch Repair, Completed F9-27
Double Row of Rivets, Rivet Spacing for Repair with F8-42
Double Skin Damage 9-5h
Double Skin Repair (Flush) F9-10
Double Skin Repair (Nonflush) F9-11
Drill Angle for Stainless Steel F6-1
Drill Bit Dimensions F7-16
Drill for Acrylic Plastics ..... Fl 0-3
Drill Press F3-29

INDEX-CONT

Subject | **Paragraph Figure, Table Number**

D - Continued

Drill Sizes for Various Diameter Rivets T7-4
Drill Sizes, Hole and, for Self-Plugging (Friction Lock) Rivets T7-8
Drilling (for Olympic Blind Rivets) 7-11d
Drilling (Plastics) 10-8f
Drilling Dimensions, CherryMAX 7-15
Drilling Material F7-68
Drilling Procedures for Blind-Type Lockbolts T7-30
Drilling Procedures for Pull- and Stump-Type Lockbolts T7-29
Drilling Spotwelds 12-2
Drilling, Burrs After F7-49
Drilling, Center Punch for F7-15
Drills and Drill Presses 3-5e
Drive Punch F3-19
Driving Hi-Shear Rivet F7-63
Ductility 5-2f
Duplicating Patterns 6-3g
Dynamic Balance 11-2b
Dzus Fastener (Stud, Grommet, and Receptacle) F7-95
Dzus Fastener (Stud, Grommet, and Receptacle), Installation Tools for F7-104
Dzus Fastener (Stud, Grommet, and Spring) F7-96
Dzus Fastener Head Styles F7-97
Dzus Fastener Installation Secondary Procedures F7-103
Dzus Fastener Installation, Wing-Type F7-102
Dzus Fastener Receptacle, Installation of F7-105
Dzus Fastener Stud and Grommet, Installation of F7-106
Dzus Fasteners 7-15a
Dzus Fasteners, Installation of Type A-AJ F7-100
Dzus Fasteners, Installation of Type F-FA-FJ F7-101
Dzus Fasteners, Installation Tools for Type A-AJ and F-FA-FJ F7-98

E

Edge Attachment, Typical Sighting Dome F10-20
Edge Band Sealing, Typical F9-29
Edge Distance, Rivet F7-4
Edge Preparation, Edge Patch F8-6
Effect of Heat Treating on a Cemented Joint F10-10
Effects of Moments 11-3a
Effects of Weight and Distance ..... 11-3b, Fl 11-3
Elasticity 5-2d
Eliminating Gaps and Leveling Installations 8-9aa, F8-59
Empennage 4-6
Empennage Assembly F4-14
Enclosure, Laminated, Approved Edge Attachment for F10-19
Enclosure, Monolithic, Approved Edge Attachment for F10-18
Enclosures, Acrylic Plastic, Maintenance of on Army Aircraft 10-15
Engine Mount (Tubing) 8-11a

INDEX-CONT

Subject — **Paragraph Figure, Table Number**

E - Continued

Engine Mount F4-6
Engine Mounts 4-3
- Maintenance 4-3c
- Piston-Engine Mounts 4-3a
- Turbine-Engine Mounts 4-3b

Equipment, Shop (Sheet Metal) 2-2, 3-1
Establishing Neutral Position of a Control Surface F11-7
Example of Structural Tubing F8-62
Expansion and Contraction Allowances (for Transparent Plastics) T10-5
Expansion and Contraction Allowances (of Transparent Plastics) 10-16b
External and Internal Repairs 8-9
External Repair, Circular F8-11

F

Face Plies, Replacing F9-24
Facing Materials 9-3
- Aluminum Alloy Facing Material 9-3a
- Glass Fiber Mat Facing Material 9-3f
- Magnesium Alloy Facing Material 9-3c
- Plywood Facing Material 9-3d
- Resin-Impregnated Glass Cloth Facing Material 9-3e
- Steel Facing Material 9-3b

Factors in Determining Rivet Length F7-3
Failure, Spotweld 12-4
Failure, Spotweld, with No Skin Breaks 12-5
Fastener, Camlock F7-107
Fastener, Cleco F3-7
Fastener, Dzus (Stud, Grommet, and Receptacle) F7-95
Fastener, Dzus (Stud, Grommet, and Spring) F7-96
Fastener, Dzus, Head Styles F7-97
Fasteners, Hi-Lock 7-14
Fasteners, Turn-Lock 7-15
Fiber Laminate Material Repair 9-9
- Blanket and Seals 9-9e
- Class I Repair 9-91
- Class II Repair 9-9j
- Class II or Class III Repair to Plastic with Foamed-In Core 9-9l
- Class II or Class III Repair to Plastic with Fluted Core 9-9m
- Class III Repair 9-9k
- Classes of Repair 9-9c
- General Principles of Materials and Repair Procedures 9-9d
- General Repair Consideration 9-9g
- General Repair Requirements 9-9a
- Inspection after Repair 9-9r
- Materials Used in Repair 9-9b
- Parting Films and Compounds 9-9f

INDEX-CONT

Subject | **Paragraph Figure, Table Number**

F - Continued

Procedure for Edge Band Sealing 9-9q
Procedure for Obtaining Void-Free Laminate 9-9p
Procedure for Preventing Moisture and Oil Contamination 9-9o
Repair of Pre-Drilled Attachment Holes 9-9n
Repair Procedures 9-9h
Field-Expedient Balancing Jig F11-6
Finishing Procedures 10-14
Ashing 10-14b
Machine Buffing 10-14c
Polishing 10-14d
Sanding 10-14a
First Flange, Layout of F6-7
Fishmouth Splice, Steel Tube, Using Large Diameter Replacement Tube F8-70
Fitting (Cementing) 10-9e
Flanged Member Repair, Bulkhead F8-26
Flanging Block, Chamfered F6-32
Flat Pattern Layout 6-3e
Flexing (of Plastics) 10-4d
Flight Control Surfaces 4-7, F4-16
Floor Channel Repair 8-9o, F8-36
Floor Repair, Metal-Covered Wooden 9-7
Flush Access Door F8-8
Flush Head Jo-Bolts, Grip Ranges, Sizes, and Diameters of F7-83
Flush Patch F8-5
Flush Patch Repair Procedure F8-7
Flush-Head Jo-Bolt F7-78
Foamed or Cellular Core Materials 9-2b
Foamed-In-Place Core Materials 9-2c
Folding 6-4e
Forces, Stress and Strain 5-3
Forgings, Rockwell T5-21
Formation of Cushion on Acrylic Plastic by Immersion In Cement F10-5
Formed Angle, Stringer Repair with F8-17
Formed Patch, Rivet Spacing for Repair Using F8-43
Formed Sections (of Stored Plastics) 10-5d
Former and Frame Installation F4-17
Former Repair 8-9h, F8-25
Former Repair, Bonded (Cap) F9-13
Former Repair, Bonded (Web) F9-14
Former, Slip Roll F3-33
Forming (General) 6-1
Forming (of Aircraft Metals) 6-2a
Forming a Concave Flange F6-24
Forming a Convex Flange F6-25
Forming a Flanged Angle by Shrinking F6-16
Forming a Flanged Angle by Stretching F6-18
Forming Blocks 3-4k, F3-23

INDEX-CONT

Subject | **Paragraph Figure, Table Number**

F - Continued

Forming Blocks, Metal and F6-23
Forming by Bumping 6-5e
Forming Curved Flanged Parts 6-5d
Forming Flanged Angles 6-5c
Forming Methods (for Plastics) 10-7d
Forming of Plastics 10-7
    Cold Forming 10-7a
    Forming Methods 10-7d
    Forms 10-7c
    Heating for Forming 10-7b
Forming Operations 6-4
    Bumping 6-4a
    Crimping 6-4b
    Folding 6-4e
    Shrinking 6-4d
    Stretching 6-4c
Forming Procedures, Hand 6-5
Forms (for Plastics) 10-7c
Frame and Former Installation F4-17
Frame and Nonstressed Skin Repair F8-38
Frame and Skin Repair F8-27
Frame and Stringer Joint, Repair of F8-35
Friction Lock (Self-Plugging Rivets) 7-7
Further Treatment (of Heat-Treated Plastics) 10-10b
Fuselage 4-2
    Airplanes 4-2b
    Construction Materials 4-2c
    Helicopters 4-2a

G

Gauge, Radius F3-6
General Precautions (Cutting Plastics) 10-8a
General Principles of Materials and Repair Procedures (with Fiber Laminate) 9-9d
General Repair Consideration (for Radome Repair) 9-9g
General Repair Practices 8-6
    Chem-Milled Skin Repair 8-6k
    Corrosion Treatment 8-6h
    Damage Evaluation 8-6b
    Damage Removal 8-6c
    Repair Material Selection 8-6d
    Repair Parts Layout 8-6e
    Rivet Selection 8-6f
    Rivet Spacing and Edge Distance 8-6g
    Riveting 8-6i
    Structural Support During Repair 8-6a
    Tolerance 8-6j

INDEX-CONT

Subject | **Paragraph Figure, Table Number**

G - Continued

General Repair Requirements (Fiber Laminate) 9-9a
General Shop Rules (Sheet Metal Shop) 2-1
Responsibility 21la
Shop Housekeeping 2-1b
Shop Safety 2-1c
Shop Tools and Materials 2-1d
General, Aircraft Plastics 10-1
General, Aircraft Structures 4-1
General, Airframe Sheet Metal Repair 8-1
General, Forming 6-1
General, Rebalancing Movable Surfaces 11-1
General, Rivets and Riveting Techniques 7-1
General, Sandwich Construction Repair 9-1
General, Shop Equipment 3-1
General, Spotwelds 12-1
General, Structural Metals 5-1
Glass Cloth Repair of Lack-of-Material Damage F9-18
Glass Cloth Repair of Large Crack or Perforation F9-17
Glass Cloth Repair of Small Crack F9-16
Glass Fiber Mat Facing Material 9-3f
Glass Windshields 10-17
Cleaning 10-17b
Inspection 10-17a
Removal and Installation 10-17c
Glue Method 10-9c
Grinder, Bench F3-30
Grinding and Sanding Machines 3-5f
Grip Lengths for Solid Shank Rivets T7-1
Grip Lengths, Hi-Lok F7-90
Grip Lengths, Jo-Bolts F7-82
Grip Range (CherryMAX Rivets) T7-11
Grip Range (Olympic Blind Rivets) 7-11b
Grip Range for Blind-Type Lockbolts T7-27
Grip Range for Olympic Rivets T7-20
Grip Range for Pull- and Stump-Type Lockbolts T7-26
Grip Ranges, Sizes, and Diameters of Flush Head Jo-Bolts F7-83
Grip Ranges, Sizes, and Diameters of Hex Head Jo-Bolts F7-84
Grip Ranges, Sizes, and Diameters of Millable Hex Head Jo-Bolts F7-85

H

Hammers, Peening with F7-110
Hand Forming Procedures 6-5
Curving Formed or Extruded Angles 6-5b
Forming by Bumping 6-5e
Forming Curved Flanged Parts 6-5d
Forming Flanged Angles 6-5c

INDEX-CONT

Subject — **Paragraph Figure, Table Number**

H - Continued

Joggling 6-5f
Lightening Holes 6-5h
Relief Holes 6-5g
Straight Line Bends 6-5a
Hand Router Template for Milling Plug Cavity F10-15
Hand Shears 3-4d, F3-10
Hand Tools (for Riveting) 7-4a
Hand-Type Tester, Webster F5-10
Handling and Storage (of Plastics) 10-5
Hand Tools and Devices 3-4
Aviation Snips 3-4f
Bench Shears 3-4e
Circle Snips 3-4h
Countersinks 3-4i
Forming Blocks 3-4k
Hand Shears 3-4d
Micrometers 3-4a
Punches 3-4j
Radius Gauge 3-4b
Sheet Metal Holders 3-4c
Straight Snips 3-4g
Hardness Conversion for Aluminum Alloy F5-16
Hardness Conversion for Brass and Mild Steel 5-13e
Hardness Conversion for Brass and Mild Steel F5-15
Hardness Range (for Aluminum) 5-13c
Hardness Range (for Copper) 5-13d
Hardness Range, Aluminum, Model B F5-13
Hardness Range, Copper, Model BB-75 ..... F5-14
Hardness Tester, Rockwell F5-12
Hardness Testing of Metals 5-13
Hardness Conversion for Brass and Mild Steel 5-13e
Hardness Range for Aluminum 5-13c
Hardness Range for Copper 5-13d
Hardness Values for Clad Aluminum Sheet and Plate, and Bare Aluminum Sheet, Plate, Extrusions, and Forgings 5-13f
Rockwell Hardness Test 5-13b
Webster Hardness Tester 5-13a
Hardness Values, Rockwell, for 0.050 Inch Minimum Thickness Class Aluminum Sheet and Plate T5-20
Hardness Values, Rockwell, for Bare Aluminum Sheet, Plate, Extrusions, and Forgings T5-21
Hardness Values for Clad Aluminum Sheet and Plate, and Bare Aluminum Sheet, Plate, Extrusions, and Forgings 5-13f
Hardness 5-21
Hat and Longeron Sections F4-21
Hat Section, Splice Repair of F8-37
Hatch Seal, Typical F8-60
Head Radius, Hi-Lok F7-92
Head Types (Jo-Bolts) 7-13a

INDEX-CONT

Subject | **Paragraph Figure, Table Number**

H - Continued

Heat Treating (Soaking)Temperature T5-10
Heat Treatment 5-5
Cold-Working 5-5c
Hot Working 5-5b
Types 5-5a
Heat Treatment, Curing and (of Plastics) 10-10
Heat-Treatable Rivet Identification F5-9
Heat-Treatment Methods 5-7e
Heat-Treatment Procedures 5-7g
Heating for Forming (Acrylic Plastics) 10-7b
Heavily Stressed Area, Circular Damage Repair In F8-51
Heavily Stressed Area, Damage Repair Near Adjacent Member In F8-52
Heavily Stressed Area, Insertion Skin Repair Across Stiffeners in F8-53
Heavily Stressed Areas, Damage Repair Near Existing Structure In F8-49
Heavily Stressed Areas, Rectangular Damage Repair for F8-48
Helicopter Stabilizer F4-15
Helicopters (Fuselage) 4-2a
Hex Head Jo-Bolt F7-79
Hex Head Jo-Bolts, Gnp Ranges, Sizes, and Diameters of F7-84
Hi-Lok Fasteners 7-14
Hole Preparation 7-14c
Identification 7-14a
Inspection 7-14f
Installation 7-14e
Removal 7-14g
Selection 7-14b
Tooling 7-14d
Hi-Lok Grip Lengths F7-90
HI-Lok Head Radius F7-92
Hi-Lok Installation F7-93
Hi-Lok Numbering System T7-32
Hi-Lok Protrusion Limits F7-94
Hi-Shear Rivet Inspection F7-64
Hi-Shear Rivet Parts F7-60
Hi-Shear Rivet Sets F7-61
HI-Shear Rivet, Driving F7-63
Hi-Shear Rivets 7-10
Identification 7-10a
Inspection 7-10e
Installation Procedures 7-10d
Installation Tools 7-10c
Removal Procedures 7-100f
Selection 7-10b
Hi-Shear Rivets, Removal of F7-65
High-Temperature Setting Adhesives 9-4a
Hold-Down Plate F6-28
Hole and Drill Sizes for Self-Plugging (Friction Lock) Rivets T7-8

INDEX-CONT

Subject | **Paragraph Figure, Table Number**

H - Continued

Hole Finder, Use of F8-10
Hole Preparation (for Hi-Lok Fasteners) 7-14c
Hole Preparation (for Jo-Bolts) 7-13e
Hole Size Limits (Olympic Blind Rivets) 7-11c
Hole Size Limits for Olympic Rivets T7-21
Hole Sizes and Countersink Diameters, Jo-Bolt T7-31
Holes, Relief F6-31
Honeycomb Core Materials 9-2d
Honeycomb Panel Edge, Repair of F9-12
Honeycomb Repair F9-2
Honeycomb Skin, Damaged F9-1
Hot Climate Precautions 10-15d
Hot Working 5-5b
Huck Lockbolts 7-12
    Identification 7-12d
    Inspection 7-12h
    Installation Procedures 7-12g
    Installation Tools 7-12f
    Materials- 7-12b
    Removal 7-12i
    Selection 7-12e
    Substitution 7-12c
    Types 7-12a

I

Identification and Types (of Aircraft Plastics) 10-4
Identification Marking Code (Steel) T5-2
Identification of Aluminum Alloys 5-7a
Identification of CherryMAX Rivets 7-8a
Identification of Copper Alloys 5-10a
Identification of Hi-Lok Fasteners 7-14a
Identification of Hi-Shear Rivets 7-10a
Identification of Huck Lockbolts 7-12d
Identification of Inconel 5-12a, T5-18
Identification of Jo-Bolts 7-13b
Identification of Magnesium Alloys 5-8a
Identification of Monel 5-11a, T5-17
Identification of Olympic Blind Rivets 7-11a
Identification of Rivnuts 7-9a
Identification of Self-Plugging Rivets 7-7a
Identification of Steel 5-6a
Identification of Terms and Symbols (Balancing) F11-2
Identification of Titanium Alloys 5-9a
Identification, Penetrator F5-11
Inconel 5-12
    Identification 5-12a

INDEX-CONT

Subject | **Paragraph Figure, Table Number**

I - Continued

Methods for Working 5-12b
Inconel, Identification of T5-18
Incorrect Countersinking F7-47
Industrial Alloys 5-4b
Inner Sleeve in Steel Tube, Centering F8-68
Inner Sleeve Splice, Steel Tube F8-67
Insertion Skin Repair Across Stiffeners in Heavily Stressed Area F8-53
Inspection after Repair (of Radomes) 9-9r
Inspection of Glass Windshields 10-17a
Inspection of Hi-Lok Fasteners 7-14f
Inspection of Hi-Shear Rivets 7-1 0e
Inspection of Huck Lockbolts 7-12h
Inspection of Jo-Bolts 7-13h
Inspection of Olympic Blind Rivets 7-11f
Inspection of Rivets 7-5
Inspection of Self-Plugging Rivets 7-7f
Inspection, Damage 8-4
Inspection, Structural 8-3
Installation Considerations (for Transparent Plastics) 10-16a
Installation of Blind-Type Lockbolt F7-77
Installation of Dzus Fastener Receptacle F7-105
Installation of Dzus Fastener Stud and Grommet F7-106
Installation of Hi-Lok Fasteners 7-14e
Installation of Huck Lockbolts 7-12g
Installation of Jo-Bolts 7-13g
Installation of Olympic Blind Rivets 7-11e
Installation of Olympic Rivets F7-70
Installation of Pull-Type Lockbolt F7-75
Installation of Stump-Type Lockbolt F7-76
Installation of Type A-AJ Dzus Fasteners F7-100
Installation of Type F-FA-FJ Dzus Fasteners F7-101
Installation Procedure, Rivnut F7-59
Installation Procedures for Hi-Shear Rivets 7-10d
Installation Procedures for Rivnuts 7-9d
Installation Procedures for Self-Plugging Rivets 7-7e
Installation Tools for Dzus Fastener (Stud, Grommet, and Receptacle) F7-104
Installation Tools for Hi-Shear Rivets 7-10c
Installation Tools for Huck Lockbolts 7-12f
Installation Tools for Rivnuts 7-9c
Installation Tools for Self-Plugging Rivets 7-7d
Installation Tools for Type A-AJ and F-FA-FJ Dzus Fasteners F7-98
Installation Tools, Rivnut F7-58
Installation Tools, Self-Plugging Rivet F7-28
Installation, Bulkhead F4-18
Installation, Hi-Lok F7-93
Installation, Self-Plugging Rivet F7-29
Insulation of Dissimilar Materials 5-7h

INDEX-CONT

Subject | **Paragraph Figure, Table Number**

I - Continued

Internal and External Repairs 8-9
Bulkhead Repair 8-9i
Eliminating Gaps and Leveling Installations 8-9aa
Floor Channel Repair 8-9o
Former Repair 8-9h
Longeron Repair 8-9b
Longitudinal Skin Joint 8-9r
Nonstressed Skin and Frame Repair 8-9q
Patch Repair to Damaged Swage in Aileron and Flap Skin 8-9z
Patch Repairs to Beaded Skin 8-9y
Repair for Damaged Skin Close to a Frame 8-9x
Repair of Crack by Stop-Drilling 8-9k
Repair of Damaged Channels 8-9j
Repair of Damaged Frame or Beam 8-9m
Repair of Dents and Creases 8-9l
Repair of Heavily Stressed Support and Stiffener 8-9v
Repair of Frame and Stringer Joint 8-9n
Rib Repair by Insertion 8-9g
Rib Repair by Patching 8-9f
Rivet Spacing, Selection and Acceptability Limits for a Nonstressed Skin Patch 8-9t
Skin and Web Repairs 8-9u
Spar Angle Repair 8-9d
Spar Repair by Insertion 8-9c
Spar Web Repair 8-9e
Splice Repair of Hat Section 8-9p
Stressed Skin Repair 8-9w
Stringer Repair 8-9a
Transverse Skin Joint 8-9s
Internal Construction, Wing 4-5b, F4-11
Introduction 1-1

J

J-Section Stringer Splice Repair F8-16
Jigs (Cementing) 10-91
Jigs for Holding Cemented Assemblies F10-9
Jo-Bolt Basic Part Numbers F7-81
Jo-Bolt Grip Lengths F7-82
Jo-Bolt Hole Sizes and Countersink Diameters T7-31
Jo-Bolt Stem Break-Off Limits F7-87
Jo-Bolt Tooling F7-86
Jo-Bolt, Flush-Head F7-78
Jo-Bolt, Hex Head F7-79
Jo-Bolt, Millable Hex Head F7-80
Jo-Bolts 7-13
Head Type 7-13a
Hole Preparation 7-13e

INDEX-CONT

Subject — **Paragraph Figure, Table Number**

J - Continued

Identification 7-13b
Inspection 7-13h
Installation 7-13g
Removal 7-13i
Sizes 7-13c
Tooling 7-13f
Uses 7-13d
Joggling 6-5f
Joggling Die F6-30
Joint Allowable Loads (Pounds) Per MIL-HDKB-5 (Rivet) Criteria T7-13

K

Ketts Saw 3-5b, F3-25

L

Lacing Method F10-12
Lack-of-Material Damage, Glass Cloth Repair of F9-18
Lap or Scab Patch (Crack) F8-3
Lap or Scab (Hole) F8-4
Lap Patch Edge Distance 8-7d
Lap Patch Edge Preparation F8-6
Large Crack or Perforation, Glass Cloth Repair of F9-17
Large Single Skin Damage 9-5g
Layout (for Cutting Plastics) 10-8b
Layout of First Flange F6-7
Layout of Third Flange F6-9
Layout of Web F6-8
Layout, Repair 7-3
Leveling Installations, Eliminating Gaps and F8-59
Lightening Holes 6-5h
Lightly Stressed Areas, Circular Damage Repair for F8-46
Lightly Stressed Areas, Crack Repair for F8-47
Linear Expansion 5-2e
Loads, Joint Allowable, (Pounds) Per MIL-HDBK-5 (Rivet) Criteria T7-13
Locating Brake Line in the Brake F6-11
Locating Brake or Sight Line 6-3f
Locating Brake or Sight Line of Flange F6-10
Location (of Stored Plastics) 10-5a
Lockbolt Collar Numbering System T7-25
Lockbolt, Blind-Type, Numbering System T7-24
Lockbolt, Pull-Type, Numbering System T7-22
Lockbolt, Stump-Type, Numbering System T7-23
Lockbolts, Huck 7-12
Lockbolts, Types of F7-72
Longeron and Hat Sections F4-21

INDEX-CONT

Subject | **Paragraph Figure, Table Number**

L - Continued

Longeron and Stringer Installation F4-19
Longeron Repair 8-9b
Longitudinal Skin Joint 8-9r, F8-39
Loose Jo-Bolt, Removal of F7-89

M

Machinability 5-2j
Machine Buffing 10-14c
Machine Screw Patch F10-14
Machine Screw Repair F10-13
Machine, Bar Folding F3-31
Magnesium Alloy Facing Material 9-3c
Magnesium Alloys 5-8
Commonly Used Alloys 5-8b
Identification 5-8a
Methods of Working 5-8c
Maintaining Original Contour (Airframe Sheet Metal Repair) 8-2b
Maintaining Original Strength (Airframe Sheet Metal Repair) 8-2a
Maintenance of Acrylic Plastic Enclosures on Army Aircraft 10-15
    Cleaning 10-15a
    Cold Climate Precautions 10-15e
    Hot Climate Precautions 10-15d
    Polishing 10-15b
    Waxing 10-15c
Maintenance of Engine Mounts 4-3c
Maintenance of Shop Equipment 3-2
    Major Repair 3-2b
    Operator Maintenance 3-2a
    Storage of Tools, Equipment, and Materials 3-2c
Major Alloying Elements (for Copper) 5-10b
Major Alloying Elements T5-5
Major Repair (of Shop Equipment) 3-2b
Malleability 5-2g
Marking Code (Steel), Identification T5-2
Marking Example, Aluminum Identification F5-7
Marking Example, Steel Identification F5-6
Masking (Cementing) 10-9f
Masking (Paper) 10-6
    Removal 10-6a
    Replacement 10-6b
Masking Paper 10-5c
Material Substitution (of Metals) 5-7j
Material Thickness Variation (and Hi-Lok Rivets) F7-91
Material, Drilling F7-68
Material, Patch, Selection T8-5
Materials (Huck Lockbolts) 7-12b

INDEX-CONT

Subject — **Paragraph Figure, Table Number**

M - Continued

Materials and Use (Solid Shank Rivets) 7-2a
Materials Used in Repair (of Fiber Laminate) 9-9b
Materials, Core (Sandwich Construction) 9-2
Materials, Facing 9-3
Materials, Substitute (Aluminum) T5-15
Mating Jig, Aircraft F8-1
Members, Structural 4-8
Metal and Forming Blocks F6-23
Metal Forming Machines 3-6
    Bar Folding Machine 3-6a
    Cornice Brake 3-6b
    Shrinking and Stretching Machine 3-6d
    Slip Roll Former 3-6c
Metal-Covered Wooden Floor Panels, Repair of F9-15
Metal-Covered Wooden Floor Repair 9-7
Negligible Damage 9-7a
Patching 9-7b
Metals and Alloys 5-4
    Alloying 5-4a
    Industrial Alloys 5-4b
    Preparing Alloys 5-4c
Metals, Hardness Testing of 5-13
Metals, Properties of 5-2
Method, Calculation (of Balancing) F11-8
Method, Lacing F10-12
Method, Scale (of Balancing) F11-9
Method, Soak F10-6
Methods (of Rebalancing) 11-4b
Methods for Working (of Inconel) 5-12b
Methods for Working and Uses (of Monel) 5-11b
Methods of Working (Magnesium Alloys) 5-8c
Methods of Working (Titanium Alloys 5-9c
Micrometer F3-5
Micrometers 3-4a
Mlcroshaver F7-14
Military Specification Number (of Plastics) 10-4a
Millable Hex Head Jo-Bolts, Grip Ranges, Sizes, and Diameters of F7-85
Millable Hex Head Jo-Bolt F7-80
Minimizing Weight (airframe Sheet Metal Repair) 8-2c
Minimum Annealing Time for Acrylic Plastic T10-4
Minimum Rivet Edge Distances T8-1
Minimum Rivet Shear and Tensile Strength (Pounds) in Steel Coupons T7-12
Missing Core 9-5b
Modern Use (Sandwich Construction 9-1c
Moisture and Contamination, Preventing F9-28
Monel 5-11
    Identification 5-1a

INDEX-CONT

Subject — **Paragraph Figure, Table Number**

M - Continued

Methods for Working and Using 5-11b
Monel, Identification of T5-17
Monocoque Construction F4-1
Monospar Wing Construction F4-8
Mount, Engine F4-6
Mounts, Engine 4-3
MS 20600 Protruding-Head Rivet Identification F7-26
MS 20601 Countersunk-Head Rivet Identification F7-27
Multispar Wing Construction F4-9

N

Nacelle Structure F4-7
Nacelles 4-4
Natural Core Materials 9-2a
Nearest Corresponding Numbers, Specifications, Cross Reference of (Steel) T5-4
Negligible Damage (of Metal-Covered Wooden Floor) 9-7a
Negligible Damage (to Airframe Sheet Metal) 8-5a
Neutral Axis and Stresses Resulting from Bending F6-2
Nicks and Dents (in Plastics) 10-12a
Nominal Diameter, Countersunk Head, CherryMAX Rivet F7-32
Nominal Diameter, Protruding Head, CherryMAX Rivet F7-33
Non-Destructive Inspection 8-3f
Non-Powered Metal Cutting Machines 3-3
Rotary Punch 3-3d
Scroll Shears 3-3b
Squaring Shears 3-3a
Throatless Shears 3-3c
Nonstressed Frame Repair F8-33
Nonstressed Skin and Frame Repair 8-9q, F8-38
Nose Rib Repair F8-22
Nose Rib Using Beads, Crimps, Relief Holes, and Riveted Angles F6-22
Nose Rib with Crimps and Beads F6-21
Nose Rib with Relief Holes F6-20
Nose Rib, Plain F6-19
Numbering System, Hi-Lok T7-32

O

Old and New Color Code (for Aluminum), Cross Reference of T5-8
Old Color Code (Steel) Cross Reference T5-3
Olympic Blind Rivets 7-11
Drilling 7-11d
Grip Range 7-11b
Hole Size Limits 7-1c
Identification 7-11a
Inspection 7-11f

INDEX-CONT

Subject — **Paragraph Figure, Table Number**

O - Continued

Installation 7-11e
Removal 7-11g
Olympic Rivet Grip Length F7-67
Olympic Rivet Material Codes T7-18
Olympic Rivet Part Number Cross Reference T7-19
Olympic Rivet Pulling Head Operation F7-69
Olympic Rivet Stem Styles F7-66
Olympic Rivet, Removing F7-71
Olympic Rivets, Grip Range for T7-20
Olympic Rivets, Hole Size Limits for T7-21
Olympic Rivets, Installation of F7-70
Open and Closed Skin Area Repair 8-7b
Operations, Forming 6-4
Operator Maintenance, (Sheet Metal) Shop Equipment 3-2a
Optical Quality (of Aircraft Plastics) 10-3
Outer Sleeve Splice, Steel Tube Using F8-69
Oven Temperature for Acrylic Plastics T110-1
Overlay Patch to Reinforce a Crack F10-16
Oversize Diameter, Countersunk Head, CherryMAX Rivet F7-34
Oversize Diameter, Protruding Head, CherryMAX Rivet F7-35

P

Pan Void, Repair of F9-7
Panel Repair, Bonded Magnesium F9-3
Part Number Breakdown, CherryMAX T7-10
Part Number Cross Reference, Olympic Rivet T7-19
Parting Films and Compounds 9-9f
Parts Repair, Spotwelded 12-6
Patch Material Selection T8-5
Patch Repairs to Beaded Skin 8-9y, F8-57
Patch Repair to Damaged Swage in Alleron and Flap Skin 8-9z, F8-58
Plywood Facing Material 9-3d
Patch, Flush F8-5
Patch, Flush, Repair Procedure F8-7
Patch, Machine Screw F10-14
Patch, Overlay, to Reinforce a Crack F10-16
Patches 8-7a
Patching (of Metal-Covered Wooden Floor) 9-7b
Patching Procedures (for Metal-Covered Wooden Floors) 8-7c
Patching Procedures (for Acrylic Plastics) 10-13
Alternate Transparent Plastic Plug Repair 10-13b
Transparent Overlay Plastic Patch 10-13c
Transparent Plastic Plug Repair 10-13a
Peening with Hammers F7-110
Penetrator Identification F5-11
Pin Punch F3-20

INDEX-CONT

Subject | **Paragraph Figure, Table Number**

P - Continued

Piston-Engine Mounts 4-3a
Plain Nose Rib F6-19
Plastic Joint, Cemented F10-4
Plastics, Forming of 10-7
Plate, Hold-Down F6-28
Pliers and Strip Extractor F7-111
Pliers, Clamp F3-9
Pliers, Cleco Fasteners F3-8
Plies and Core, Replaced F9-23
Pneumatic Rivet Gun Structure F7-12
Pneumatic Rivet Gun, Riveting Procedures Using a F7-19
Pneumatic Rivet Guns F7-11
Polishing (of Acrylic Plastics) 10-14d, 10-15b
Portable Power Drills F3-28
Position (of Stored Plastics) 10-5b
Power Drills, Portable F3-28
Power Tools (for Riveting) 7-4b
Powered Metal Cutting Machines 3-5
- Band Saw 3-5d
- Drills and Drill Presses 3-5e
- Grinding and Sanding Machines 3-5f
- Ketts Saw 3-5b
- Reciprocating Saw 3-5c
- Safety 3-5a

Practices, Countersinking F7-18
Precipitation (Aging) Treating Temperatures, Times, and Condition T5-9
Preparing Alloys 5-4c
Preparing Materials for Spotwelding 12-6d
Press, Drill F3-29
Preventing Moisture and Contamination F9-28
Prick Punch F3-16
Primary Horizontal Member in Heavily Stressed Area, Damage Repair Near F8-50
Principles, Balancing 11-3
Procedure for Edge Band Sealing 9-9q
Procedure for Obtaining Void-Free Laminate 9-9p
Procedure for Preventing Moisture and Oil Contamination 9-90
Procedures, Bonding 10-11
Procedures, Cementing 10-9
Procedures, Finishing 10-14
Procedures, Patching 10-13
Properties of Metals 5-2
- Abrasion Resistance 5-2l
- Compressive Strength 5-2c
- Conductivity 5-2m
- Corrosion Resistance 5-2k
- Ductility 5-2f
- Elasticity 5-2d

INDEX-CONT

Subject — **Paragraph Figure, Table Number**

P - Continued

Hardness 5-2i
Linear Expansion 5-2e
Machinability 5-2j
Malleability 5-2g
Shear Strength 5-2b
Specific Gravity 5-2n
Tensile Strength 5-2a
Toughness 5-2h
Protective Coatings 8-3e
Protruding Head Nominal Diameter CherryMAX Rivet F7-33
Protruding Head Oversize Diameter CherryMAX Rivet F7-35
Protruding Head Rivets, Removal of 7-6a, F7-23
Protrusion Limits, Hi-Lok F7-94
Pull- and Blind-Type Aluminum Lockbolt Rivet Gun F7-73
Pull- and Blind-Type Steel Lockbolt Rivet Gun F7-74
Pull- and Stump-Type Lockbolts, Drilling Procedures for T7-29
Pull- and Stump-Type Lockbolts, Grip Range for T7-26
Pull-Type Lockbolt Numbering System T7-22
Pull-Type Lockbolt, Installation of F7-75
Punch, Center F3-17
Punch, Drive F3-19
Punch, Pin F3-20
Punch, Prick F3-16
Punch, Rotary F3-4
Punch, Transfer F3-21
Punches 3-4j
Purposes (of Manual) 1-1

Q

Quality Assurance for Repair (of Sandwich Construction) 9-6q
Quality, Optical (of Aircraft Plastics) 10-3
Quency Delay, Recommended Maximum, Wrought Alloys (for Immersion Type Quenching) T5-13

R

Radii of Cuts (of Plastic), Various, Bandsaw Widths for T10-3
Radius Gauge 3-4b, F3-6
Radius of Bend 6-3a
Range, Grip (CherryMAX Rivets) T7-11
Reaming, Dimpling and F7-48
Rebalancing Movable Surfaces, General 11-1
Reciprocating Saw 3-5c, F3-26
Recommended Bucking Bar Weights T7-6
Recommended Countersinks for Shaving T7-16
Recommended Installation Procedures for Transparent Plastics 10-16
Bolt and Rivet Mounting 10-16c

INDEX-CONT

Subject | **Paragraph Figure, Table Number**

R - Continued

Expansion and Contraction Allowances 10-16b
Installation Considerations 10-16a
Recommended Maximum Quench Delay, Wrought Alloys (for Immersion Type Quenching) T5-13
Rectangular Damage Cutout Repair (Lightly Stressed) F8-44
Rectangular Damage Repair for Heavily Stressed Areas F8-48
Reheat Treatment of Alclad Alloys T5-12
Reinforced Shell Construction F4-3
Reinforcing a Dent at a Steel Tube Cluster Joint F8-65
Relief Holes 6-5g, F6-31
Relief Holes, Nose Rib with F6-20
Removal (of Hi-Lok Fasteners) 7-14g
Removal (of Huck Lockbolts) 7-12i
Removal (of Jo-Bolts) 7-13i
Removal (of Masking) 10-6a
Removal (of Olympic Blind Rivets) 7-11g
Removal and Installation (of Glass Windshields) 10-17c
Removal of Countersunk Head Rivet F7-24
Removal of Damaged Face Plies by Scarf Method F9-25
Removal of Hi-Shear Rivets F7-65
Removal of Loose Jo-Bolt F7-89
Removal of Protruding Head Rivets F7-23
Removal of Rivets 7-6
Removal of Self-Plugging Rivets F7-30
Removal of Tightly Installed Jo-Bolt F7-88
Removal Procedures (Hi-Shear Rivets) 7-10f
Removal Procedures (Rivnuts) 7-9e
Removal Procedures (Self-Locking Rivets) 7-7g
Removal, CherryMAX F7-55
Removing Damaged Face Plies Using Step Joint Method F9-22
Removing Olympic Rivet F7-71
Repair by Insertion, Stringer, When Damage Affects More than One Stringer F8-15
Repair by Insertion, Stringer, When Damage Affects Only One Stringer F8-14
Repair by insertion, Stringer, When Damage Exceeds Two Thirds of One Leg in Width F8-13
Repair by Patching, Stringer F8-12
Repair for Damaged Skin Close to a Frame 8-9x, F8-56
Repair for Heavily Stressed Support and Stiffener F8-54
Repair for Short Edge Distance and Broken Spotwelds F12-7
Repair Layout 7-3
Rivet Selection 7-3a
Rivet Spacing 7-3c
Rivet Strength 7-3b
Rivet Substitutions 7-3d
Repair Material Selection 8-6d
Repair Methods for Specified Defects (of Plastics)-.- 10-12
Cracks 10-12d
Crazing 10-12c
Delamination and Discoloration 10-12e

INDEX-CONT

Subject | **Paragraph Figure, Table Number**

R - Continued

Nicks and Dents 10-12a
Scratches 10-12b
Repair of Cracks by Stop-Drilling 8-9k, F8-31
Repair of Damage Near Existing Structure (Lightly Stressed) F8-45
Repair of Damaged Channels 8-9j
Repair of Damaged Frame or Beam 8-9m
Repair of Defective Spotwelds Exceeding Allowable Percentage 1 2-6c
Repair of Dents 9-61
Repair of Dents and Creases 8-91, F8-32
Repair of Double-Skin Damage 9-6m
Repair of Frame and Stringer Joint 8-9n, F8-35
Repair of Heavily Stressed Support and Stiffener 8-9v
Repair of Honeycomb Panel Edge F9-12
Repair of Honeycomb Panel Edges 9-6o
Repair of Impregnated Glass Cloth Parts 9-8
Repair of Large, Single-Skin Damage 9-61
Repair of Metal-Covered Wooden Floor Panels F9-15
Classification of Damage 9-8a
Damage Repair 9-8b
Repair of Missing Core 9-6f
Repair of Pan Void F9-7
Repair of Pre-Drilled Attachment Holes 9-9n
Repair of Sandwich Construction 9-6
Bonded Former Assemblies 9-6p
Bonded Magnesium Panels 9-6d
Bonded Stiffeners 9-6c
Cleanliness of Repair Area 9-6a
Quality Assurance for Repair 9-6q
Repair of Dents 9-61
Repair of Double-Skin Damage 9-6m
Repair of Honeycomb Panel Edges 9-60o
Repair of Large, Single-Skin Damage 9-6i
Repair of Missing Core 9-6f
Repair of Scotchply Edge Member and Corfil Edge Filler Damage 9-6n
Repair of Skin Core Voids 9-6g
Repair of Skin Doubler Voids 9-6h
Repair of Skin Panels 9-6e
Repair of Small, Single-Skin Damage 9-6j
Repair of Small, Single-Skin Holes 9-5f
Sample Honeycomb Repair 9-6b
Repair of Scotchply Edge Member and Corfil Edge Filler Damage 9-6n
Repair of Sharp Dent or Crack in Length of Steel Tubing F8-66
Repair of Skin Core Doubler Voids 9-6h
Repair of Skin Core Voids 9-6g, F9-6
Repair of Skin Panels 9-6e
Repair of Small, Single-Skin Damage 9-6j
Repair of Small, Single-Skin Holes 9-6k

INDEX-CONT

Subject | **Paragraph Figure, Table Number**

R - Continued

Repair Parts Layout 8-6e
Repair Practices, General 8-6
Repair Procedures (for Radome Repair) 9-9h
Repair, Channel, by Insertion F8-30
Repair, Channel, by Patching F8-29
Repair, Floor Channel F8-36
Repair, Former F8-25
Repair, Honeycomb F9-2
Repair, Machine Screw F10-13
Repair, Nonstressed Frame F8-33
Repair, Nose Rib F8-22
Repair, Rib, by Insertion F8-24
Repair, Spar Angle F8-20
Repair, Spar, by Insertion F8-19
Repair, Stressed Beam F8-34
Repair, Trailing Edge F9-4
Repair, Tubing 8-11
Repair, Wing Rib F8-23
Repairing Aluminum Alloy Parts, Rivet Selection and Spacing When T8-2
Repairing Corrosion-Resistant Steel Parts, Rivet Selection and Spacing When T8-3
Repairing Magnesium Alloy Parts, Rivet Selection and Spacing When T8-4
Repairs for Cracks in Radius of Stringer End, Typical F8-18
Replaced Plies and Core F9-23
Replacement (of Masking) 10-6b
Replacement and Repair, Skin F8-8
Replacing Face Plies F9-24
Requirements (for Rebalancing 11-4a
Resin-Impregnated Glass Cloth Facing Material 9-3e
Resins, Adhesives and 9-4
Responsibility for Shop Rules (Sheet Metal Shop) 2-1a
Retainer, Seal F8-61
Rib Construction F4-13
Rib Repair by Insertion 8-9g, F8-24
Rib Repair by Patching 8-9f
Right and Wrong Methods of Horizontal Stacking of Small (Plastic) Sheets F10-1
Rivet Acceptability Limits F7-22
Rivet Edge Distance F7-4
Rivet Edge Distances, Minimum T8-1
Rivet Failure 7-5b
Rivet Grip Length, Olympic F7-67
Rivet Gun, Pneumatic, Structure F7-12
Rivet Guns, Pneumatic F7-11
Rivet Head Cracking F7-21
Rivet Head Markings, Solid Shank F7-2
Rivet Heat-Treating 7-2c
Rivet Identification 7-2b
Rivet Identification, MS 20600 Protruding-Head F7-26

INDEX-CONT

Subject | **Paragraph Figure, Table Number**

R - Continued

Rivet Identification, MS 20601 Countersunk-Head F7-27
Rivet Inspection 7-5
Correctly and Incorrectly Driven Rivets 7-5a
Rivet Failure 7-5b
Rivet Inspection Procedures 7-5c
Rivet Inspection Procedures 7-5c
Rivet Inspection, Hi-Shear F7-64
Rivet Installation 7-4
Hand Tools 7-4a
Power Tools 7-4b
Riveting Procedure 7-4c
Rivet Length, Factors in Determining F7-3
Rivet Material Codes, Olympic T7-18
Rivet Parts, Hi-Shear F7-60
Rivet Pulling Head Operation, Olympic F7-69
Rivet Removal 7-6
Countersunk-Head Rivet Removal 7-6b
Protruding-Head Rivet Removal 7-6a
Rivet Selection 73a, 8-6f
Rivet Selection and Spacing When Repairing Aluminum Alloy Parts T8-2
Rivet Selection and Spacing When Repairing Corrosion-Resistant T8-3
Rivet Selection and Spacing When Repairing Magnesium Alloy Parts T8-4
Rivet Sets, Hi-Shear F7-61
Rivet Shaving, CherryMAX F7-51
Rivet Shear, Minimum, and Tensile Strength (Pounds) in Steel Coupons T7-12
Rivet Spacing 7-3c, F7-5
Rivet Spacing and Edge Distance 8-6g
Rivet Spacing for Repair Using Formed Patch F8-43
Rivet Spacing for Repair with Double Row of Rivets F8-42
Rivet Spacing for Repair with Single Row of Rivets F8-41
Rivet Spacing, Selection and Acceptability Limits for a Nonstressed Skin Patch 8-9t
Rivet Squeezers F7-13
Rivet Stem Styles, Olympic F7-66
Rivet Strength 7-3b
Rivet Styles and Materials, Solid Shank F7-1
Rivet, CherryMAX F7-31
Rivet, Heat-Treatable, Identification of F5-9
Riveting 8-6i
Riveting Procedure 7-4c
Riveting Procedures Using a Pneumatic Rivet Gun F7-19
Rivets and Riveting Techniques, General 7-1
Rivets Substitutions 7-3d
Rivets, CherryMAX 7-8
Rivets, Correctly and Incorrectly Driven F7-20
Rivets, Hi-Shear 7-10
Rivets, Olympic Blind 7-11
Rivets, Solid Shank 7-2

INDEX-CONT

Subject — **Paragraph Figure, Table Number**

R - Continued

Rivnut Grip Length, Determining F7-57
Rlvnut Installation Procedure F7-59
Rlvnut Installation Tools F7-58
Rivnuts 7-9, F7-56
Identification 7-9a
Installation Procedures 79d
Installation Tools 79c
Removal Procedures 7-9e
Selection 7-9b
Rockwell Hardness Scales, Standard T5-19
Rockwell Hardness Test 5-13b
Rockwell Hardness Tester F5-12
Rockwell Hardness Values for 0.050 Inch Minimum Thickness Clad Aluminum Sheet and Plate T5-20
Rockwell Hardness Values for Bare Aluminum Sheet, Plate, Extrusions, and Forgings T5-21
Room Temperature Setting Adhesives 9-4c
Rotary Punch 3-3d, F3-4
Router Cutter, Typical F10-2
Routers 10-8d

S

SAE Numbers, Steel T5-1
Safety of Powered Metal Cutting Machines 3-5
Sample Channel F6-6
Sample Honeycomb Repair 9-6b
Sandbag F3-24
Sandbag Bumping F6-29
Sanding (Plastics) 10-14a
Sanding Deep Scratches F10-11
Sandwich Construction Repair, General 9-1
Construction 9-1a
Design 9-1b
Modern Use 9-1c
Sandwich Construction, Repair of 9-6
Saw, Ketts F3-25
Saw, Reciprocating F3-26
Saws (Used to Cut Plastics) 10-8c
Scab or Lap Patch (Crack) F8-3
Scab or Lap Patch (Hole) F8-4
Scale Method (of Balancing) F11-9
Scope (of Manual) 1-2
Scotchply Edge Member and Corfil Edge Filler Damage 9-5i
Scratch or Crack Repair F9-5
Scratches (in Plastics) 10-12b
Scribing and Edge Sanding 10-8e
Scroll Shears 3-3b, F3-2
Seal Retainer 8-61

INDEX-CONT

Subject — **Paragraph Figure, Table Number**

S - Continued

Sealant Defects 8-10c
Sealant Repair or Replacement 8-10d
Sealing of Hardware 8-10e
Sealing, Structural 8-10
Secondary Procedures, Dzus Fastener Installation F7-103
Selection of CherryMAX Rivets 7-8b
Selection of Hi-Lok Fasteners 7-14b
Selection of Hi-Shear Rivets 7-10b
Selection of Huck Lockbolts 7-12e
Selection of Rivnuts 7-9b
Self-Plugging Rivet Installation F7-29
Self-Plugging Rivet Installation Tools F7-28
Self-Plugging Rivet Selection 7-7c
Self-Plugging Rivet Stem Features F7-25
Self-Plugging Rivets (Friction Lock) 7-7
- Identification 7-7a
- Inspection 7-7f
- Installation Procedures 7-7e
- Installation Tools 7-7d
- Removal Procedures 7-7g
- Self-Plugging Rivet Selection 7-7c
- Substitution for Common Rivets 7-7b

Self-Plugging Rivets, Removal of F7-30
Semi-Monocoque Construction F4-2
Setback 6-3c, F6-4
Setback - K - Chart T6-2
Shaping Aircraft Metals ..... -6-2
- Chem-Milling 6-2b
- Forming 6-2a

Shear 5-3d, F5-4
Shear Strength 5-2b
Shear, Hand F3-10
Shear, Scroll F3-2
Shearing Spotwelds 12-3
Shears, Bench F3-11
Shears, Squaring F3-1
Shears, Throatless F3-3
Sheet and Plate, Rockwell T5-20
Sheet Metal Holders 3-4c
Sheet Metal, Bending 6-3
Sheet Substitution, Aluminum Alloy T5-14
Shell, Reinforced, Construction F4-3
Shop Equipment (Sheet Metal Shop) 2-2
Shop Housekeeping (Sheet Metal Shop) 2-1b
Shop Rules, General (Sheet Metal Shop) 2-1
Shop Safety (Sheet Metal Shop) 2-1e, 2-1c
Shop Tools and Materials (Sheet Metal Shop) 2-1d

INDEX-CONT

Subject | **Paragraph Figure, Table Number**

S -- Continued

Shop Working Practice (Aluminum Alloys) 5-7c
Shrinking 6-4c, F6-14
Shrinking and Stretching Machine 3-6d, F3-34
Shrinking by V-Block Method F6-15
Shrinking, Forming a Flanged Angle by F6-16
Sight Line, Brake or F6-5
Single Row of Rivets, Rivet Spacing for Repair with F8-41
Single Shear Strength of Aluminum Alloy Rivets T7-2
Sizes (of Jo-Bolts) 7-13c
Sizes of Twist Drills with Decimal Equivalents T7-5
Skin and Bulkhead Repair F8-28
Skin and Frame Repair F8-27
Skin and Web Repairs 8-9u
Skin Core Voids 9-5c
Skin Core Voids, Repair of F9-6
Skin Cracks 8-3d
Skin Cutout Patching Using Spotwelds 12-6f
Skin Cutout Repair Near Stiffener Using Spotwelds 12-6g
Skin Doubler Void Repair (0.255 Inch or Greater) F9-8
Skin Doubler Void Repair (Less Than 0.255 Inch) F9-9
Skin Doubler Voids 9-5d
Skin Joint, Longitudinal F8-39
Skin Joint, Transverse F8-40
Skin Patch, Nonstressed, Rivet Spacing, and Acceptibility Limits for 8-9t
Skin Repair, Chem-Milled F8-2
Skin Repair, Double (Flush) F9-10
Skin Repair, Double (Nonflush) F9-11
Skin Repair, Stressed 8-7
Skin Replacement 8-8a
Skin Replacement and Repair 8-8
    Circular External Repair 8-8b
    Skin Replacement 8-8a
    Temporary Patch Repairs 8-8c
Skin Wrinkles 8-3c
Skin, Damaged, Close to a Frame, Repair for F8-56
Skin, Stressed, Repair F8-55
Sleeve Stretch Marks, CherryMAX F7-54
Slip Roll Former 3-6c, F3-33
Small Crack, Glass Cloth Repair of F9-16
Small Single Skin Damage 9-5f
Snips, Aviation F3-12
Snips, Circle F3-14
Snips, Straight F3-13
Soak Method 10-9b, F1 0-6
Soaking 10-9g
Soaking (Heat Treating) Temperature T5-10
Soaking Time for Solution Treatment of Cast Alloys T5-11

INDEX-CONT

Subject | **Paragraph Figure, Table Number**

S - Continued

Solid Shank Rivet Head Markings F7-2
Solid Shank Rivet Styles and Materials F7-1
Solid Shank Rivets 7-2
Materials and Use 7-2a
Rivet Heat-Treating 7-2c
Rivet Identification 7-2b
Solid Shank Rivets, Grip Lengths for T7-1
Solution Treatment of Cast Alloys, Soaking Time for T5-11
Spacing, and Rivet Selection, When Repairing Corrosion-Resistant Steel Parts T8-3
Spacing, Rivet F7-5
Spar Angle Repair 8-9d, F8-20
Spar Construction F4-12
Spar Repair by Insertion 8-9c, F8-19
Spar Web Repair 8-9e, F8-21
Specific Gravity 5-2n
Specifications, Cross Reference of Nearest Corresponding Numbers (Steel) T5-4
Specified Defects (of Plastics), Repair Methods for 10-12
Splice Repair of Hat Section 8-9p, F8-37
Spotfacing F7-62
Spotweld Failure 12-4
Spotweld Failure with No Skin Breaks 12-5
Spotweld Repair to Crack in Stiffener 12-61
Spotweld Repair to Stiffener 12-6h
Spotwelded Parts Repair 12-6
Acceptable Percentage of Defective Spotwelds 12-6b
Acceptable Spotweld Spacing 12-6a
Preparing Materials for Spotwelding 12-6d
Repair for Short Edge Distance and Broken Spotwelds 12-6e
Repair of Defective Spotwelds Exceeding Allowable Percentage 12-6c
Skin Cutout Patching Using Spotwelds 12-6f
Skin Cutout Repair Near Stiffener Using Spotwelds 12-6g
Spotweld Repair to Crack in Stiffener 12-61
Spotweld Repair to Hole in Stiffener 12-6h
Spotwelds, Drilling 12-2
Spotwelds, General 12-1
Spotwelds, Shearing 12-3
Spring Installation, Standard F7-99
Squaring Shears 3-3a, F3-1
Squeezers, Rivet F7-13
Stabilizer, Helicopter F4-15
Stacking, Horizontal, of Small (Plastic) Sheets, Right and Wrong Methods of F10-1
Stainless Steel, Drill Angle for F6-1
Standard Countersink F7-7
Standard Rockwell Hardness Scales T5-19
Standard Spring Installation F7-99
Standard Tools for Stump-Type Lockbolts T7-28
Static Balance 11-2a

INDEX-CONT

Subject — **Paragraph Figure, Table Number**

S - Continued

Static Balance, Control Surface F11-1
Steel 5-6
Alloying Materials 5-6b
Identification of Steels 5-6a
Types of Steels and Their Uses 5-6c
Steel Facing Material 9-3b
Steel Identification Marking Example F5-6
Steel Lockbolt Rivet Gun, Pull- and Blind-Type F7-74
Steel SAE Numbers T5-1
Steel Tube Fishmouth Splice Using Large Diameter Replacement Tube F8-70
Steel Tube Inner Sleeve Splice F8-67
Steel Tube Using Outer Sleeve Splice F8-69
Steel Tubing Distortion, Correcting Oval Shaped F8-63
Stem and Collar Flushness, CherryMAX F7-52
Stem Break-Off Limits, Jo-Bolt F7-87
Stem Catcher Bag 670A20 ..... F7-44
Stem Features, Self-Plugging Rivet F7-25
Step Joint Method, Removing Damaged Face Plies Using F9-22
Stop Countersink F7-8
Stop-Drilling, Repair of Cracks by F8-31
Storage (of Adhesives and Resins) 9-4d
Storage and Handling (of Plastics) 10-5
Formed Sections 10-5d
Location 10-5a
Masking Paper 10-5c
Position 10-5b
Storage of Tools, Equipment, and Materials 3-2c
Straight Line Bends 6-5a
Straight Snips 3-4g, F3-13
Straightening Bowed Steel Tubes F8-64
Strength, Bearing (Pounds) T7-3
Stress and Strain Forces 5-3
Bending 5-3e
Compression 5-3b
Shear 5-3d
Tension 5-3a
Torsion 5-3c
Stressed Beam Repair F8-34
Stressed Skin Repair 8-7, 8-9w, F8-55
Flush Access Door 8-7d
Open and Closed Skin Area Repair 8-7b
Patches 8-7a
Patching Procedures 8-7c
Stresses Resulting from Bending, Neutral Axis and F6-2
Stretching 6-4d, F6-13
Stretching Machine, Shrinking and F3-34
Stretching, Forming a Flanged Angle by F6-18

INDEX-CONT

Subject | **Paragraph Figure, Table Number**

S - Continued

String Repair by Insertion When Damage Affects Only One Stringer F8-14
Stringer and Longeron Installation F4-19
Stringer Cross-Section, Typical F4-20
Stringer Repair 8-9a
Stringer Repair by Insertion When Damage Affects More than One Stringer F8-15
Stringer Repair by Insertion When Damage Exceeds Two Thirds of One Leg in Width F8-13
Stringer Repair by Patching F8-12
Stringer Repair with Formed Angle F8-17
Stringer Splice Repair, J-Section F8-16
Stringers and Longerons 4-8b
Strip Extractor, Pliers and F7-111
Structural Inspection 8-3
    Corrosion 8-3a
    Non-Destructive Inspection 8-3f
    Protective Coatings 8-3e
    Skin Cracks 8-3d
    Skin Wrinkles 8-3c
    Surface Indications 8-3b
Structural Members 4-8
    Bulkheads, Frames, and Formers 4-8a
    Stringers and Longerons 4-8b
Structural Metals, General 5-1
Structural Parts, Airplane F4-5
Structural Sealing 8-10
    Sealant Defects 8-10c
    Sealant Repair or Replacement 8-10d
    Sealing of Hardware 8-10e
Types of Seals 8-10a
Wires and Tubes 8-10b
Structural Support During Repair 8-6a
Structural Tubing 8-11b
Structural Tubing, Example of F8-62
Structure, Nacelle F4-7
Stud, Camlock, Installation F7-112
Stump-Type Lockbolt Numbering System T7-23
Stump-Type Lockbolt, Installation of F7-76
Stump-Type Lockbolts, Standard Tools for T7-28
Substitute Materials (Aluminum) T5-15
Substitution (by Huck Lockbolts) 7-12c
Substitution (of Self-Plugging Rivets) for Common Rivets 7-7b
Support and Stiffener, Heavily Stressed, Repair for F8-54
Supporting Ring, Use of F7-108
Surface Balance Considerations 11-2
    Addition of Weights 11-4c
    Methods 11-4b
    Requirements 11-4a
Surface Indications 8-3b

INDEX-CONT

Subject — **Paragraph Figure, Table Number**

S - Continued

Surface Rebalancing Procedures 11-4
Dynamic Balance 11-2b
Static Balance 11-2a
Terms and Symbols 11-2c

T

Tall Cone and Cabin Sections F4-4
Techniques, Cutting (for Plastics) 10-8
Temperature (for Heat Treatment of Plastics) 10-10a
Template, Hand Router, for Milling Plug Cavity F10-15
Temporary Patch Repairs 8-8c
Tensile Strength 5-2a
Tension 5-3a, F5-1
Terms and Symbols (Balancing) 11-2c
Terms and Symbols (Balancing), Identification of F11-2
Thickness Variation, Material (and Hi-Lok Rivets) F7-91
Thickness, Cushion F10-8
Throatless Shears 3-3c, F3-5
Tightly Installed Jo-Bolt, Removal of F7-88
Titanium and Titanium Alloys 5-9
    Characteristics 5-9b
    Identification 5-9a
    Methods of Working 5-9c
Tolerance (for Repairs) 8-6j
Tool Capacity Chart (for Rivets) T7-14
Tooling (for Hi-Lok Fasteners) 7-15
Tooling (for Jo-Bolts) 7-13f
Tooling, Jo-Bolt F7-86
Torsion 5-3c, F5-3
Toughness 5-2h
Trailing Edge Repair F9-4
Transfer Punch F3-21
Transfer Punch, Use of F8-9
Transparent Overlay Plastic Patch 10-13c
Transparent Plastic Plug Repair 10-13a
Transparent Plastics, Recommended Installation Procedures for 10-16
Transverse Skin Joint 8-9s, F8-40
Treatment, Heat 5-5
Troubleshooting, CherryMAX T7-17
Tubing Repair 8-11
    Engine Mount 8-11a
    Structural Tubing 8-11b
Turbine-Engine Mounts 4-3b
Turn-Lock Fasteners 7-15
    Camlock Fasteners 7-15b
    Dzus Fasteners 7-15a

INDEX-CONT

Subject — **Paragraph Figure, Table Number**

T - Continued

Twist Drills with Decimal Equivalents, Sizes of T7-5
Type of Cement 10-9a
Types and Identification (of Aircraft Plastics) 10-4
Burning 10-4b
Chemical Reaction 10-4e
Flexing 10-4d
Military Specification Number 10-4a
Visual Inspection 10-4c
Types of Circular Saw Blades for Cutting Acrylic Plastic Sheets T10-2
Types of Design (Wing) 4-5a
Types of Heat Treatment 5-5a
Types of Lockbolts F7-72
Types of Seals 8-10a
Types of Steel and Their Uses 5-6c
Typical Bolt Installation (In Transparent Plastic) F10-17
Typical CherryMAX Blind Heads F7-53
Typical Edge Band Sealing F9-29
Typical Hatch Seal F8-60
Typical Repairs for Cracks in Radius of Stringer End F8-18
Typical Router Cutter F10-2
Typical Scarf Method for Class II Repair (of Radomes) F9-26
Typical Sighting Dome Edge Attachment F10-20
Typical Stringer Cross Sections F4-20

U

Unbalanced and Balanced Conditions F11-4
Unbonding and Ply Separation 9-5j
Use of Camlock Punch F7-109
Use of Hole Finder F8-10
Use of Supporting Ring F7-108
Use of Transfer Punch F8-9
Use of 269C3 Cherry Grip Gauge F7-36
Uses (of Jo-Bolts) 7-13d

V

V-Block F3-22
Various Diameter Rivets, Drill Sizes for T7-4
Visual Inspection (of Plastics) 10-4c
Void Repair, Skin Doubler (Less Than 0.255 Inch) F9-9
Void Repair, Skin Doubler (0.255 Inch or Greater) F9-8

W

Waxing 10-15c
Web Repair, Spar F8-21

INDEX-CONT

Subject | **Paragraph Figure, Table Number**

W - Continued

Webster Hardness Tester 5-13a
Weight and Distance, Effects of F11-3
Windshields, Glass 10-17
Wing Construction, Box Beam F4-10
Wing Construction, Monospar F4-8
Wing Construction, Multispar F4-9
Wing Internal Construction F4-11
Wing Rib Repair F8-23
Wing-Type Dzus Fastener Installation F-102
Wings 4-5
    Internal Construction 4-5b
    Types of Design 4-5a
Wires and Tubes 8-10b

By Order of the Secretary of the Army:

GORDON R. SULLIVAN
General, United States Army
Chief of Staff

Official:

MILTON H. HAMILTON
Administrative Assistant to the
Secretary of the Army
02558

Distribution:

To be distributed in accordance with DA Form 12-31-E, block no. 3226, requirements for TM 1-1500-204-23-10.

☆ U.S. GOVERNMENT PRINTING OFFICE: 1994 - 510-106-00002

These are the instructions for sending an electronic 2028

The following format must be used if submitting an electronic 2028. The subject line must be exactly the same and all fields must be included; however only the following fields are mandatory: 1, 3,4, 5, 6, 7, 8, 9, 10, 13, 15, 16, 17, and 27.

From: " Whomever" <whomever@avma27.army.mil>
To: ls-lp@redstone.army.mil

Subject: DA Form 2028

1. **From:** Joe Smith
2. Unit: home
3. **Address;** 4300 Park
4. **City:** Hometown
5. **St:** MO
6. **Zip:** 77777
7. **Date Sent:** 19-OCT-93
8. **Pub no:** 1-6130-294
9. **Pub Title:** DMWR
10. **Publication Date:** 31 January 1991
11. Change Number: 7
12. Submitter Rank: MSG
13. **Submitter FName:** Joe
14. Submitter MName: T
15. **Submitter LName:** Smith
16. **Submitter Phone:** 123-123-1234
17. **Problem:** 1
18. Page: 2
19. Paragraph: 3
20. Line: 4
21. NSN: 5
22. Reference: 6
23. Figure: 7
24. Table: 8
25. Item: 9
26. Total: 123
27. **Text:**

This is the text for the problem below line 27.

RECOMMENDED CHANGES TO EQUIPMENT TECHNICAL PUBLICATIONS

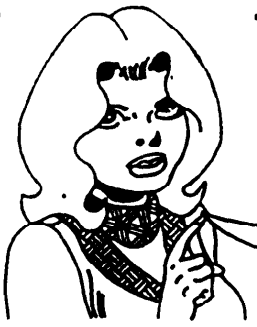

THEN . .JOT DOWN THE DOPE ABOUT IT ON THIS FORM,CAREFULLYTEAR IT OUT, FOLD IT AND DROP IT IN THE MAIL!

SOMETHING WRONG WITH THIS PUBLICATION?

FROM: (PRINT YOUR UNIT'S COMPLETE ADDRESS)

DATE SENT

PUBLICATION NUMBER	PUBLICATION DATE	PUBLICATION TITLE
TM 1-1500-204-23-10	31 JULY 1992	POWER SUPPLY FOR AVUM-GENERAL AIRCRAFT MAINTENANCE

BE EXACT PIN-POINT WHERE IT IS

PAGE NO	PARA-GRAPH	FIGURE NO	TABLE NO

IN THIS SPACE, TELL WHAT IS WRONG AND WHAT SHOULD BE DONE ABOUT IT:

PRINTED NAME, GRADE OR TITLE, AND TELEPHONE NUMBER

SIGN HERE

DA FORM 1 JUL 79 2028-2

PREVIOUS EDITIONS ARE OBSOLETE.

DRSTS-M verprint2, 1 Nov 80

P.S.- - IF YOUR OUTFIT WANTS TO KNOW ABOUT YOUR RECOMMENDATION, MAKE A CARBON COPY OF THIS AND GIVE TO YOUR HEADQUARTERS.

REVERSE OF DA FORM 2028-2 Reverse of DRSTS-M Overprint 2, 1 Nov 80

FILL IN YOUR UNITS ADDRESS

FOLD BACK

DEPARTMENT OF THE ARMY

OFFICIAL BUSINESS

COMMANDER
U.S. ARMY AVIATION AND MISSILE COMMAND
ATTN: AMSAM-MMC-LS-LP
REDSTONE ARSENAL, AL 35898-5230

TEAR ALONG PERFORATED LINE

RECOMMENDED CHANGES TO EQUIPMENT TECHNICAL PUBLICATIONS

THEN. . JOT DOWN THE DOPE ABOUT IT ON THIS FORM. CAREFULLY TEAR IT OUT. FOLD IT AND DROP IT IN THE MAIL!

SOMETHING WRONG WITH THIS PUBLICATION?

FROM: (PRINT YOUR UNIT'S COMPLETE ADDRESS)
CDR, 1st Bn, 65th ADA
ATTN: SP4 John Doe
Key West, FL 33040

DATE SENT
14 January 1979

PUBLICATION NUMBER	PUBLICATION DATE	PUBLICATION TITLE
TM 9-1430-550-34-1	7 Sep 72	Unit of Radar Set AN/MPQ-50 Tested at the HFC

BE EXACT. . PIN-POINT WHERE IT IS

PAGE NO	PARA-GRAPH	FIGURE NO	TABLE NO
9-19		9-5	
21-2	step 1C		21-2

IN THIS SPACE TELL WHAT IS WRONG AND WHAT SHOULD BE DONE ABOUT IT:

"B" Ready Relay K11 is shown with two #9 contacts. That contact which is wired to pin 8 of relay K16 should be changed to contact #10.

Reads: Multimeter B indicates 600 K ohms to 9000 K ohms.

Change to read: Multimeter B indicates 600 K ohms minimum.

Reason: Circuit being checked could measure infinity. Multimeter can read above 9000 K ohms and still be correct.

NOTE TO THE READER:

Your comments will go directly to the writer responsible for this manual, and he will prepare the reply that is returned to you. To help him in his evaluation of your recommendations, please explain the reason for each of your recommendations, unless the reason is obvious.

All comments will be appreciated, and will be given immediate attention. Handwritten comments are acceptable.

For your convenience, blank "tear out" forms, preprinted, addressed, and ready to mail, are included in this manual.

SAMPLE

PRINTED NAME, GRADE OR TITLE, AND TELEPHONE NUMBER
SP4 John Doe, Autovon 222-222

SIGN HERE

DA FORM 1 JUL 79 2028-2

PREVIOUS EDITIONS ARE OBSOLETE.

P.S.--IF YOUR OUTFIT WANTS TO KNOW ABOUT YOUR RECOMMENDATION MAKE A CARBON COPY OF THIS AND GIVE IT TO YOUR HEADQUARTERS

REVERSE OF DA FORM 2028–2 Reverse of DRSTS-M Overprint 2,
1 Nov 80

TEAR ALONG PERFORATED LINE

FILL IN YOUR UNITS ADDRESS

FOLD BACK

DEPARTMENT OF THE ARMY

OFFICIAL BUSINESS

COMMANDER
U.S. ARMY AVIATION AND MISSILE COMMAND
ATTN: AMSAM-MMC-LS-LP
REDSTONE ARSENAL, AL 35898-5230

RECOMMENDED CHANGES TO EQUIPMENT TECHNICAL PUBLICATIONS

THEN . .JOT DOWN THE DOPE ABOUT IT ON THIS FORM,CAREFULLYTEAR IT OUT, FOLD IT AND DROP IT IN THE MAIL!

SOMETHING WRONG WITH THIS PUBLICATION?

FROM: (PRINT YOUR UNIT'S COMPLETE ADDRESS)

DATE SENT

PUBLICATION NUMBER	PUBLICATION DATE	PUBLICATION TITLE
TM 1-1500-204-23-10	31 JULY 1992	POWER SUPPLY FOR AVUM_GENERAL AIRCRAFT MAINTENANCE

BE EXACT PIN-POINT WHERE IT IS

PAGE NO	PARA-GRAPH	FIGURE NO	TABLE NO

IN THIS SPACE, TELL WHAT IS WRONG AND WHAT SHOULD BE DONE ABOUT IT:

PRINTED NAME, GRADE OR TITLE, AND TELEPHONE NUMBER

SIGN HERE

DA FORM 1 JUL 79 2028-2

PREVIOUS EDITIONS ARE OBSOLETE.

DRSTS-M verprint2, 1 Nov 80

P.S.- - IF YOUR OUTFIT WANTS TO KNOW ABOUT YOUR RECOMMENDATION, MAKE A CARBON COPY OF THIS AND GIVE TO YOUR HEADQUARTERS.

REVERSE OF DA FORM 2028–2 Reverse of DRSTS-M Overprint 2, 1 Nov 80

TEAR ALONG PERFORATED LINE

FILL IN YOUR UNITS ADDRESS

FOLD BACK

DEPARTMENT OF THE ARMY

OFFICIAL BUSINESS

COMMANDER
U.S. ARMY AVIATION AND MISSILE COMMAND
ATTN: AMSAM-MMC-LS-LP
REDSTONE ARSENAL, AL 35898-5230

RECOMMENDED CHANGES TO EQUIPMENT TECHNICAL PUBLICATIONS

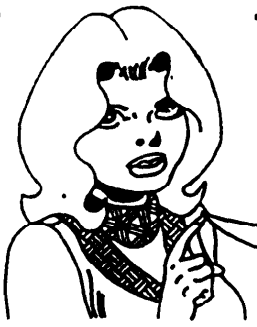

THEN . .JOT DOWN THE DOPE ABOUT IT ON THIS FORM,CAREFULLYTEAR IT OUT, FOLD IT AND DROP IT IN THE MAIL!

SOMETHING WRONG WITH THIS PUBLICATION?

FROM: (PRINT YOUR UNIT'S COMPLETE ADDRESS)

DATE SENT

PUBLICATION NUMBER	PUBLICATION DATE	PUBLICATION TITLE
TM 1-1500-204-23-10	31 JULY 1992	POWER SUPPLY FOR AVUM-GENERAL AIRCRAFT MAINTENANCE

BE EXACT PIN-POINT WHERE IT IS

PAGE NO	PARA-GRAPH	FIGURE NO	TABLE NO

IN THIS SPACE, TELL WHAT IS WRONG AND WHAT SHOULD BE DONE ABOUT IT:

PRINTED NAME, GRADE OR TITLE, AND TELEPHONE NUMBER

SIGN HERE

DA FORM 1 JUL 79 2028-2

PREVIOUS EDITIONS ARE OBSOLETE.

DRSTS-M verprint2, 1 Nov 80

P.S.- - IF YOUR OUTFIT WANTS TO KNOW ABOUT YOUR RECOMMENDATION, MAKE A CARBON COPY OF THIS AND GIVE TO YOUR HEADQUARTERS.

REVERSE OF DA FORM 2028-2 Reverse of DRSTS-M Overprint 2, 1 Nov 80

FILL IN YOUR UNITS ADDRESS

FOLD BACK

DEPARTMENT OF THE ARMY

OFFICIAL BUSINESS

COMMANDER
U.S. ARMY AVIATION AND MISSILE COMMAND
ATTN: AMSAM-MMC-LS-LP
REDSTONE ARSENAL, AL 35898-5230

TEAR ALONG PERFORATED LINE

THE METRIC SYSTEM AND EQUIVALENTS

Linear Measure

1 centimeter = 10 millimeters = .39 inch
1 decimeter = 10 centimeters = 3.94 inches
1 meter = 10 decimeters = 39.37 inches
1 dekameter = 10 meters = 32.8 feet
1 hectometer = 10 dekameters = 328.08 feet
1 kilometer = 10 hectometers = 3.2808.8 feet

Weights

1 centigram = 10 milligrams = .15 grain
1 decigram = 10 centigrams = 1.54 grains
1 gram = 10 decigram = .035 ounce
1 dekagram = 10 grams = .35 ounce
1 hectogram = 10 dekagrams = 3.52 ounces
1 kilogram = 10 hectograms = 2.2 pounds
1 quintal = 100 kilograms = 220.46 pounds
1 metric ton = 10 quintals = 1.1 short tons

Cubic Measure

1 cu. centimeter = 1000 cu. millimeters = .06 cu. inch
1 cu. decimeter = 1000 cu. centimeters = 61.02 cu in.
1 cu. meter = 1000 cu. decimeters = 35.31 cu. feet

Square measure

1 sq. centimeter = 100 sq. millimeters =.155 sq. in.
1 sq. decimeter = 100 sq. centimeters = 15.5 inches
1 sq. meter (centare) = 100 sq. decimeters = 10.76 feet
1 sq. dekameter (are) = 100 sq. meters = 1.076.4 sq. ft.
1 sq. hectometer (hectare) = 100 sq. dekameters = 2.47 acres
1 sq. kilometer = 100 hectometers = .386 sq. miles

Liquid Measure

1 dekaliter = 10 liters = 2.64 gallons
1 hectoliter = 10 dekaliters = 26.42 gallons
1 kiloliter = 10 hectoliters = 264.18 gallons
1 liter = 10 deciliters = 33.81 fl. ounces
1 centiliter = 10 milliliters = .34 fl. ounce
1 deciliter = 10 centiliters = 3 38 fl. ounces
1 metric ton = 10 quintals = 1.1 short tons

Approximate Conversion Factors

To change	To	Multiply by
inches	centimeters	2.540
feet	meters	.305
yards	meters	.914
miles	kilometers	1.609
sq. inches	sq. centimeters	6.451
sq. feet	sq. meters	.093
sq. yards	sq. meters	.836
sq. miles	sq. kilometers	2.590
acres	sq. hectometers	.405
cubic feet	cubic meters	.028
cubic yards	cubic meters	.765
fluid ounces	milliliters	29.573
pints	liters	.472
quarts	liters	.946
gallons	liters	3.785
ounces	grams	28.349
pounds	kilograms	.454
short tons	metric tons	.907
pound inches	newton-meters	.11296

To change	To	Multiply by
ounce inches	newton-meters	.0070062
centimeters	inches	.394
meters	feet	3.280
meters	yards	1.094
kilometers	miles	.621
sq. centimeters	sq. inches	.155
sq. meters	sq. yards	10.764
sq. kilometers	sq. miles	1.196
sq. hectometers	acres	2.471
cubic meters	cubic feet	35.315
milliliters	fluid ounces	.034
liters	pints	2.113
liters	quarts	1.057
grams	ounces	.035
kilograms	pounds	2.205
metric tons	short tons	1.102
pound-feet	newton-meters	1.356

Temperature (Exact)

°F Fahrenheit temperature — 5/9 (after subtracting 32) — Celsius Temperature °C

PIN: 070468-000